AUTHENTICATED
U.S. GOVERNMENT
INFORMATION
GPO

5–17–94
Vol. 59 No. 94

federal register

Tuesday
May 17, 1994

United States
Government
Printing Office
SUPERINTENDENT
OF DOCUMENTS
Washington, DC 20402

OFFICIAL BUSINESS
Penalty for private use, $300

SECOND CLASS NEWSPAPER

Postage and Fees Paid
U.S. Government Printing Office
(ISSN 0097–6326)

5–17–94
Vol. 59 No. 94
Pages 25555–25774

federal register

Tuesday
May 17, 1994

Briefings on How To Use the Federal Register
For information on briefings in Washington, DC and Chicago, IL, see announcement on the inside cover of this issue.

FEDERAL REGISTER Published daily, Monday through Friday, (not published on Saturdays, Sundays, or on official holidays), by the Office of the Federal Register, National Archives and Records Administration, Washington, DC 20408, under the Federal Register Act (49 Stat. 500, as amended; 44 U.S.C. Ch. 15) and the regulations of the Administrative Committee of the Federal Register (1 CFR Ch. I). Distribution is made only by the Superintendent of Documents, U.S. Government Printing Office, Washington, DC 20402.

The **Federal Register** provides a uniform system for making available to the public regulations and legal notices issued by Federal agencies. These include Presidential proclamations and Executive Orders and Federal agency documents having general applicability and legal effect, documents required to be published by act of Congress and other Federal agency documents of public interest. Documents are on file for public inspection in the Office of the Federal Register the day before they are published, unless earlier filing is requested by the issuing agency.

The seal of the National Archives and Records Administration authenticates this issue of the **Federal Register** as the official serial publication established under the Federal Register Act. 44 U.S.C. 1507 provides that the contents of the **Federal Register** shall be judicially noticed.

The **Federal Register** is published in paper and 24x microfiche format. The annual subscription price for the **Federal Register** paper edition is $444, or $490 for a combined **Federal Register**, Federal Register Index and List of CFR Sections Affected (LSA) subscription; the microfiche edition of the **Federal Register** including the Federal Register Index and LSA is $403. Six month subscriptions are available for one-half the annual rate. The charge for individual copies in paper form is $6.00 for each issue, or $6.00 for each group of pages as actually bound; or $1.50 for each issue in microfiche form. All prices include regular domestic postage and handling. International customers please add 25% for foreign handling. Remit check or money order, made payable to the Superintendent of Documents, or charge to your GPO Deposit Account, VISA or MasterCard. Mail to: New Orders, Superintendent of Documents, P.O. Box 371954, Pittsburgh, PA 15250–7954.

There are no restrictions on the republication of material appearing in the **Federal Register.**

How To Cite This Publication: Use the volume number and the page number. Example: 59 FR 12345.

SUBSCRIPTIONS AND COPIES

PUBLIC

Subscriptions:

Paper or fiche	202–783–3238
Assistance with public subscriptions	512–2303

Single copies/back copies:

Paper or fiche	783–3238
Assistance with public single copies	512–2457

FEDERAL AGENCIES

Subscriptions:

Paper or fiche	523–5243
Assistance with Federal agency subscriptions	523–5243

For other telephone numbers, see the Reader Aids section at the end of this issue.

THE FEDERAL REGISTER
WHAT IT IS AND HOW TO USE IT

FOR: Any person who uses the Federal Register and Code of Federal Regulations.

WHO: The Office of the Federal Register.

WHAT: Free public briefings (approximately 3 hours) to present:

1. The regulatory process, with a focus on the Federal Register system and the public's role in the development of regulations.
2. The relationship between the Federal Register and Code of Federal Regulations.
3. The important elements of typical Federal Register documents.
4. An introduction to the finding aids of the FR/CFR system.

WHY: To provide the public with access to information necessary to research Federal agency regulations which directly affect them. There will be no discussion of specific agency regulations.

WASHINGTON, DC
(two briefings)

WHEN: May 18 at 9:00 am and 1:30 pm
WHERE: Office of the Federal Register
Conference Room, 800 North Capitol Street NW, Washington, DC (3 blocks north of Union Station Metro)
RESERVATIONS: 202–523–4538

CHICAGO, IL

WHEN: June 9 at 9:00 am
WHERE: Ralph Metcalfe Federal Building
Conference Room 328
77 West Jackson Blvd.
Chicago, IL
RESERVATIONS: 1–800–366–2998

Printed on recycled paper containing 100% post consumer waste

Contents

Federal Register

Vol. 59, No. 94

Tuesday, May 17, 1994

Agricultural Marketing Service
PROPOSED RULES
Federal Seed Act regulations; miscellaneous amendments, 25706–25742

Agricultural Research Service
NOTICES
Patent licenses; non-exclusive, exclusive, or partially exclusive:
Plant Sciences, Inc., 25600
Urbana Laboratories, 25600

Agriculture Department
See Agricultural Marketing Service
See Agricultural Research Service
See Animal and Plant Health Inspection Service

Air Force Department
NOTICES
Privacy Act:
Systems of records, 25625–25636

Animal and Plant Health Inspection Service
NOTICES
Environmental statements; availability, etc.:
Genetically engineered organisms; field test permits—
Melon plants, 25600–25601
Mexican fruit fly regulatory control program, 25601–25602
Veterinary biological products; production and establishment licenses, 25602

Army Department
NOTICES
Meetings:
Science Board, 25636

Blackstone River Valley National Heritage Corridor Commission
NOTICES
Meetings; Sunshine Act, 25702

Centers for Disease Control and Prevention
NOTICES
Hospital Infection Control Practices Advisory Committee; prevention of spread of vancomycin resistance; comment request and meeting, 25758–25763

Coast Guard
NOTICES
Environmental statements; availability, etc.:
Northeast Atlantic Region; differential global positioning system, 25697–25699
Meetings:
Unified command and incident command system; workshop, 25699

Commerce Department
See Economics and Statistics Administration
See International Trade Administration
See Minority Business Development Agency
See National Oceanic and Atmospheric Administration

Consumer Product Safety Commission
NOTICES
Meetings; Sunshine Act, 25701
Settlement agreements:
PCA Apparel Industries, Inc., 25619–25620

Customs Service
RULES
Articles conditionally free, subject to reduced rate, etc.:
Special tariff treatment provisions and programs; certain documentation requirements elimination, 25563–25571

Defense Department
See Air Force Department
See Army Department
See Uniformed Services University of the Health Sciences
NOTICES
Privacy Act:
Systems of records, 25620–25622
U.S. Court of Military Appeals; practice and procedure rule changes, 25622–25625

Drug Enforcement Administration
NOTICES
Applications, hearings, determinations, etc.:
Research Biochemicals, Limited Partnership, 25669

Economics and Statistics Administration
NOTICES
Meetings:
Designing the Year 2000 Census and Census-Related Activities for 2000–2009 Task Force Advisory Committee, 25602

Education Department
RULES
Postsecondary education:
Federal family education loan program, 25744–25748
NOTICES
Grants and cooperative agreements; availability, etc.:
Dwight D. Eisenhower leadership program, 25637–25638
Federal Pell grant program, etc.—
Need analysis methodology, 25750–25755

Employment and Training Administration
NOTICES
Meetings:
Unemployment Compensation Advisory Council, 25671–25672

Energy Department
See Federal Energy Regulatory Commission
NOTICES
Atomic energy agreements; subsequent arrangements, 25639–25640
Environmental statements; availability, etc.:
Hawaii geothermal project, HI; withdrawn, 25638–25639
Grant and cooperative agreement awards:
Los Angeles Water and Power Department, 25639
West Virginia University, 25639

Environmental Protection Agency
RULES
Air quality implementation plans; approval and promulgation; various States:
Delaware, 25571–25572
PROPOSED RULES
Hazardous waste:
State underground storage tank program approvals—
Massachusetts, 25588–25589
Pesticides; tolerances in food, animal feeds, and raw agricultural commodities:
Amitraz, 25586–25588
NOTICES
Superfund; response and remedial actions, proposed settlements, etc.:
D.L. Mud, Inc., Site, LA, 25643
Water pollution control:
Clean Water Act—
State water quality standards; approval and disapproval lists and individual control strategies; availability, 25643–25644

Farm Credit Administration
NOTICES
Federal Farm Credit Banks Funding Corporation and Farm Credit System banks; market access agreement, 25644–25656

Federal Aviation Administration
RULES
Airworthiness standards:
Normal, utility, acrobatic, and commuter category airplanes—
Emergency exit provisions, 25766–25774
Jet routes, 25561–25562

Federal Communications Commission
PROPOSED RULES
Common carrier services:
Spectrum below 5 GHz transferred from Federal Government use, 25589–25590
NOTICES
Meetings; Sunshine Act, 25701

Federal Emergency Management Agency
NOTICES
Disaster and emergency areas:
Illinois, 25656
Oklahoma, 25656
Texas, 25656

Federal Energy Regulatory Commission
RULES
Filing fees:
Annual update, 25562–25563
NOTICES
Environmental statements; availability, etc.:
Consumers Power Co., 25640
Scott Paper Co., 25640
Seattle City Light, 25640–25641
Applications, hearings, determinations, etc.:
Eastern Shore Natural Gas Co., 25641
Golden Spread Electric Cooperative, Inc., 25641
Koch Gateway Pipeline Co., 25641–25642
Koch Gateway Pipeline Co. et al.; correction, 25702
Northwest Pipeline Corp., 25642
Richfield Gas Storage System, 25642
Sarnia Cogeneration Joint Venture, 25643
Tennessee Gas Pipeline Co., 25643
Transwestern Pipeline Co., 25643
Wyoming Interstate Co., Ltd.; correction, 25702

Federal Financial Institutions Examination Council
NOTICES
Accounting by creditors for loan impairment; implementation issues; comment request, 25656–25659

Federal Highway Administration
RULES
Motor carrier safety standards:
Parts and accessories necessary for safe operation—
Front wheel brakes on Mexican commercial motor vehicles, 25572–25574
PROPOSED RULES
Engineering and traffic operations:
Utilities, 25579–25581

Federal Reserve System
NOTICES
Meetings; Sunshine Act, 25701
Applications, hearings, determinations, etc.:
Barnett Banks, Inc., et al., 25659
Fleet Financial Group, Inc., et al., 25659–25660
Hubco Inc. et al., 25660
J.P. Morgan & Co. Inc.; correction, 25660–25661

Health and Human Services Department
See Centers for Disease Control and Prevention
See National Institutes of Health

Housing and Urban Development Department
RULES
Low income housing:
Housing assistance payments (Section 8)—
Contract rent annual adjustment factors; correction, 25702
NOTICES
Regulatory waiver requests; quarterly listing, 25663–25667

Immigration and Naturalization Service
RULES
Immigration and nationality forms; listing update, 25555–25561

Interior Department
See National Park Service

Internal Revenue Service
PROPOSED RULES
Income taxes:
Limitation on deconsolidation use to avoid foreign tax credit limitations, 25584–25585
Subchapter K anti-abuse rule, 25581–25584

International Trade Administration
NOTICES
Antidumping:
Iron construction castings from—
Canada, 25603–25606
Solid urea from—
Estonia, 25606
Sweaters wholly or in chief weight of man-made fiber from—
Korea, 25606–25609
Countervailing duties:
Apparel from—
Thailand, 25609–25610

Leather wearing apparel from—
Argentina, 25611–25612
Mexico, 25612–25614
Export trade certificates of review, 25614–25615
Scope rulings; list, 25615–25617
Applications, hearings, determinations, etc.:
Lehigh University et al., 25617

Justice Department
See Drug Enforcement Administration
See Immigration and Naturalization Service

Labor Department
See Employment and Training Administration
See Pension and Welfare Benefits Administration
NOTICES
Meetings:
Glass Ceiling Commission, 25669–25671

Minority Business Development Agency
NOTICES
Business development center program applications:
Alaska, 25617–25619

National Highway Traffic Safety Administration
RULES
Automobile Fuel Efficiency Act; relief petitions and plans; corporate average fuel economy program, 25574–25576
Motor vehicle safety standards:
Tire selection and rims for vehicles other than passenger cars, 25576–25578
PROPOSED RULES
Motor vehicle safety standards:
Fuel system integrity—
Crossover lines connecting dual fuel tanks, 25590–25599
NOTICES
Motor vehicle safety standards; exemption petitions, etc.:
Chrysler Corp., 25701–25702

National Institutes of Health
NOTICES
Grants and cooperative agreements; availability, etc.:
Adenoviral-mediated gene therapy development for treatment of cardiovascular conditions, 25661
Meetings:
National Cancer Institute, 25662
National Heart, Lung, and Blood Institute, 25661
National Institute on Deafness and Other Communication Disorders, 25661–25662
Research Grants Division Behavioral and Neurosciences Special Emphasis Panel, 25662–25663

National Oceanic and Atmospheric Administration
NOTICES
Permits:
Marine mammals, 25619

National Park Service
NOTICES
Meetings:
Denali National Park Subsistence Resource Commission, 25668
Salt River Bay National Historical Park and Ecological Preserve at St. Croix, VI Commission, 25667–25668
National Register of Historic Places:
Pending nominations, 25668–25669

National Transportation Safety Board
NOTICES
Meetings; Sunshine Act, 25701

Nuclear Regulatory Commission
NOTICES
Abnormal occurrence reports:
Periodic reports to Congress, 25672
Meetings; Sunshine Act, 25701–25702
Uranium mill tailing sites, reclamation plans; license amendment requests:
Atlantic Richfield Co., 25672–25673
Applications, hearings, determinations, etc.:
Bauer, James, M.D., 25673–25674

Pension and Welfare Benefits Administration
NOTICES
Form 5500 Schedule G filing requirement deferral, 25672

Public Health Service
See Centers for Disease Control and Prevention
See National Institutes of Health

Securities and Exchange Commission
NOTICES
Agency information collection activities under OMB review, 25674–25675
Self-regulatory organizations; proposed rule changes:
National Association of Securities Dealers, Inc., 25676–25677
New York Stock Exchange, Inc.; correction, 25702
Philadelphia Stock Exchange, Inc., 25675–25676
Applications, hearings, determinations, etc.:
First Trust Special Situations Trust et al., 25677–25680
Mutual Life Insurance Co. of New York et al., 25680–25683
Rembrandt Funds et al., 25683–25684

Small Business Administration
NOTICES
Business loan policy:
Secondary participation guarantee and certification agreement form changes, 25684–25696

State Department
NOTICES
Shrimp trawl fishing; turtle protection guidelines; certifications, 25697

Transportation Department
See Coast Guard
See Federal Aviation Administration
See Federal Highway Administration
See National Highway Traffic Safety Administration

Treasury Department
See Customs Service
See Internal Revenue Service

Uniformed Services University of the Health Sciences
NOTICES
Privacy Act:
Systems of records, 25636–25637

Separate Parts In This Issue

Part II
Department of Agriculture, Agricultural Marketing Service, 25706–25742

Part III
Department of Education, 25744–25748

Part IV
Department of Education, 25750–25755

Part V
Department of Health and Human Services, Centers for Disease Control and Prevention, 25758–25763

Part VI
Department of Transportation, Federal Aviation Administration, 25766–25774

Reader Aids
Additional information, including a list of public laws, telephone numbers, and finding aids, appears in the Reader Aids section at the end of this issue.

Electronic Bulletin Board
Free **Electronic Bulletin Board** service for Public Law numbers, **Federal Register** finding aids, and a list of documents on public inspection is available on 202–275–1538 or 275–0920.

CFR PARTS AFFECTED IN THIS ISSUE

A cumulative list of the parts affected this month can be found in the Reader Aids section at the end of this issue.

7 CFR
Proposed Rules:
201.....25706

8 CFR
299.....25555
499.....25555

14 CFR
23.....25766
71.....25561

18 CFR
381.....25562

19 CFR
10.....25563
123.....25563
145.....25563
178.....25563

23 CFR
Proposed Rules:
645.....25579

24 CFR
888.....25703

26 CFR
Proposed Rules:
1 (2 documents).....25581, 25584

34 CFR
682.....25744

40 CFR
52.....25571
Proposed Rules:
180.....25586
281.....25588

47 CFR
Chapter I.....25589

49 CFR
393.....25572
526.....25574
571.....25576
Proposed Rules:
571.....25590

Rules and Regulations

Federal Register
Vol. 59, No. 94
Tuesday, May 17, 1994

This section of the FEDERAL REGISTER contains regulatory documents having general applicability and legal effect, most of which are keyed to and codified in the Code of Federal Regulations, which is published under 50 titles pursuant to 44 U.S.C. 1510.

The Code of Federal Regulations is sold by the Superintendent of Documents. Prices of new books are listed in the first FEDERAL REGISTER issue of each week.

DEPARTMENT OF JUSTICE

Immigration and Naturalization Service

8 CFR Parts 299 and 499

[INS No. 1638–93]

RIN 1115–AD58

Immigration and Nationality Forms

AGENCY: Immigration and Naturalization Service, Justice.

ACTION: Interim rule with request for comments.

SUMMARY: This rule amends the Immigration and Naturalization Service's (Service) regulations by updating the listing of forms currently in use by the Service. This revision is necessary to ensure that only the current editions of forms listed in the regulations are used and that the public has access to correct information concerning public use forms that have been approved for use by the Office of Management and Budget (OMB), and forms available from the Superintendent of Documents. This rule also provides approved Service standards which, when followed, will allow the public to electronically generate Service forms.

DATES: This interim rule is effective May 17, 1994. Written comments should be submitted on or before July 18, 1994.

ADDRESSES: Please submit written comments, in triplicate, to the Records Systems Division, Director, Policy Directives and Instructions Branch, Immigration and Naturalization Service, 425 "I" Street, NW., Washington, DC 20536. Please reference INS No. 1638–93 on your correspondence.

FOR FURTHER INFORMATION CONTACT: Ruthie Amoyal or Eartha Butler, Management Analysts, Records Systems Division, Policy Directives and Instructions Branch, Immigration and Naturalization Service, 425 "I" Street NW., Washington, DC 20536, Telephone: (202) 514–3291.

SUPPLEMENTARY INFORMATION: This rule revises §§ 299.1 and 499.1 by updating the listing of the prescribed forms to be used in compliance with the provisions of Title 8 of the Code of Federal Regulations.

This rule also revises § 299.3 by updating the listing of forms that can be purchased from the Superintendent of Documents, their stock numbers and prices. In addition, this rule provides standards in § 299.4 which, when followed, will allow the public to take advantage of the automated technology available in the marketplace to electronically generate Service forms that will be deemed acceptable for processing.

Finally, § 299.5 is being updated to reflect current public use forms and their respective OMB Control Numbers.

These revisions are necessary to ensure that the forms listings remain current by:

1. Adding newly created forms,
2. Removing obsolete forms that were cancelled for use by the Service, and
3. Amending the entries for those forms which have been recently revised to reflect the current edition date and title.

The Service's implementation of this rule as an interim rule with provisions for post promulgation of public comments is based on the "good cause" exceptions found at 5 U.S.C. 533(b)(B) and (d)(3). The reasons and necessity for immediate implementation of this interim rule are as follows: This rule is administrative in nature and is necessary to ensure that only the current editions of the forms listed in the regulations are used. It will also ensure that the public has access to correct information concerning public use forms approved for use by OMB and forms available from the Superintendent of Documents. In addition, this rule provides a benefit to the public by allowing them to take advantage of existing computer technology available in the marketplace to electronically reproduce Immigration and Naturalization Service forms. These electronically reproduced forms will be accepted by the Service for processing.

Regulatory Flexibility Act

The Commissioner of the Immigration and Naturalization Service, in accordance with 5 U.S.C. 605(b), has reviewed this regulation and by approving it certifies that this rule does not have a significant economic impact on a substantial number of small entities. This rule is primarily administrative in nature and merely updates the existing forms listings currently contained in Title 8 of the Code of Federal Regulations. In addition, this rule is intended to benefit small entities by providing them with specific standards which, if followed, will enable them to take advantage of existing computer technology available in the marketplace to electronically reproduce Service forms.

Executive Order 12866

This rule is not considered by the Department of Justice, Immigration and Naturalization Service, to be a "significant regulatory action" under Executive Order 12866, § 3(f), Regulatory Planning and Review, and the Office of Management and Budget has waived its review process under section 6(a)(3)(A).

Executive Order 12612

The regulation proposed herein will not have substantial direct effects on the States, on the relationship between the national Government and the States, or on the distribution of power and responsibilities among the various levels of government. Therefore, in accordance with Executive Order 12612, it is determined that this rule does not have sufficient Federalism implications to warrant the preparation of a Federal Assessment.

List of Subjects

8 CFR Part 299

Immigration, Reporting and recordkeeping requirements.

8 CFR Part 499

Citizenship and naturalization, Nationality forms.

Accordingly, chapter I of title 8 of the Code of Federal Regulations, is amended as follows:

PART 299—IMMIGRATION FORMS

1. The authority citation for part 299 continues to read as follows:

Authority: 8 U.S.C. 1101, 1103; 8 CFR part 2.

2. Part 299 is amended by revising §§ 299.1, 299.3, 299.4, and 299.5, to read as follows:

§ 299.1 Prescribed forms.

The forms listed below are hereby prescribed for use in compliance with the provisions of subchapter A and B of this chapter. To the maximum extent feasible, the forms used should bear the edition date shown or a subsequent edition date.

Form No.	Edition date	Title
AR–11	10–01–85	Alien's Change of Address Card.
CDC 4.22–1	10–84	Statement In Support of Application for Waiver of Excludability (Under section 212(a)(1), Immigration and Nationality Act).
CDC 42.10	04–81	Interstate Reciprocal Notification of Disease.
CDC 75.17	04–82	Report on Alien with Tuberculosis not Considered Active.
CDC 75.18	04–82	Report on Alien with Tuberculosis Waiver.
IAP–66	10–78	Certificate of Eligiblity for Exchange Visitor Status.
FD–258	04–25–72	Applicant Card.
OF–157	02–88	Medical Examination of Applicants for United States Visas.
G–28	10–25–79	Notice of Entry of Appearance as Attorney or Representative.
G–56	05–01–83	General Call-in-Letter.
G–296	09–12–58	Report of Violation.
G–297	05–28–70	Order to Seize Aircraft.
G–298	09–12–58	Public Notice of Seizure.
G–325	10–01–82	Biographic Information.
G–325A	10–01–82	Biographic Information.
G–325B	10–01–82	Biographic Information.
G–325C	10–01–82	Biographic Information.
G–639	10–30–92	Freedom of Information Act/Privacy Act Request.
G–658	11–01–75	Record of Information Disclosure (Privacy Act).
I–9	11–21–91	Employment Eligibility Verification.
I–17	04–11–91	Petition for Approval of School for Attendance by Nonimmigrant Students.
I–17A	05–01–83	Designated School Officials.
I–17B	05–01–83	School System Attachment.
I–20A–B/I–20ID	04–27–88	Certificate of Eligibility for Nonimmigrant (F–1) Student Status—For Academic and Language Students.
I–20M–N/I–20ID	05–03–90	Certificate of Eligibility for Nonimmigrant (M–1) Student Status—For Vocational Students.
I–68	09–01–84	Canadian Border Boat Landing Permit.
I–72	04–01–83	Form letter for Returning Deficient Applications/Petitions.
I–79	05–15–70	Notice of Intention to Fine Under Immigration and Nationality Act.
I–90	07–28–92	Application to Replace Alien Registration Receipt Card.
I–92	06–01–73	Aircraft/Vessel Report.
I–94	04–15–86	Arrival-Departure Record.
I–94W	05–29–91	Nonimmigrant Visa Waiver Arrival/Departure Document.
I–95AB	10–01–84	Crewman's Landing Permit.
I–102	10–01–91	Application for Replacement/Initial Nonimmigrant Arrival/Departure Document.
I–104	12–03–90	Alien Address Report Card.
I–122	05–04–79	Notice to Applicant for Admission Detained for Hearing before Immigration Judge.
I–129	12–11–91	Petition for a Nonimmigrant Worker.
I–129F	04–11–91	Petition for Alien Fiance(e).
I–129S	12–20–91	Nonimmigrant Petition Based on Blanket L Petition.
I–130	04–11–91	Petition for Alien Relative.
I–131	12–10–91	Application for Travel Document.
I–134	12–01–84	Affidavit of Support.
I–138	07–01–83	Subpoena.
I–140	12–02–91	Immigrant Petition for Alien Worker.
I–141	04–21–69	Medical Certificate.
I–147	10–01–83	Notice of Temporary Exclusion.
I–151	07–01–72	Alien Registration Receipt Card.
I–171	03–04–82	Notice of Approval of Relative Immigrant Visa Petition.
I–171C	07–01–83	Notice of Approval or Extension of Nonimmigrant Visa Petition of H or L Alien.
I–171F	10–14–76	Notice of Approval of Nonimmigrant Visa Petition for Fiance or Fiancee.
I–171H	12–15–82	Notice of Favorable Determination Concerning Application for Advance Processing of Orphan Petition.
I–175	04–01–75	Application for Nonresident Alien's Canadian Border Crossing Card.
I–180	09–01–81	Notice of Voidance of Form I–186 or Denial of Form I–190.
I–181	03–01–83	Memorandum of Creation of Record of Lawful Permanent Residence.
I–185	01–01–75	Nonresident Alien Canadian Border Crossing Card.
I–190	03–01–75	Application for Nonresident Alien Mexican Border Crossing Card.
I–191	04–11–91	Application for Advance Permission to Return to Unrelinquished Domicile.
I–192	04–11–91	Application for Advance Permission to Enter as Nonimmigrant.
I–193	04–11–91	Application for Waiver of Passport and/or Visa.
I–194	02–01–82	Notice of Approval of Advance Permission to Enter as Nonimmigrant (Pursuant to §212(d)(3)(A) or (B) of the Act).
I–202	11–15–79	Authorization for Removal.
I–205	11–29–79	Warrant of Deportation.
I–212	04–11–91	Application for Permission to Reapply for Admission into the United States After Deportation or Removal.
I–221	06–12–92	Order to Show Cause and Notice of Hearing.

Form No.	Edition date	Title
I-243	09-27-75	Application for Removal.
I-246	03-31-83	Application for Stay of Deportation.
I-247	03-01-83	Immigration Detainer—Notice of Action.
I-259	10-01-69	Notice to Detain, Deport, Remove, or Present Aliens.
I-259C	03-28-91	Notice to Carrier—Acknowledgement by Carrier of Arrival of Possible Excludable Alien.
I-260	06-01-73	Notice to Take Testimony of Witness.
I-284	12-20-66	Notice to Transportation Line Regarding Deportation and Detention Expenses of Detained Alien.
I-286	06-12-92	Notification to Alien of Conditions of Release of Detention.
I-287	04-10-72	Special Care and Attention for Alien.
I-288	02-20-62	Notice to Transportation Line Regarding Deportation Expenses of Alien Completely Ready for Deportation.
I-290A	10-31-79	Notice of Appeal to the Board of Immigration Appeals.
I-290B	01-04-91	Notice of Appeal to the Administrative Appeals Unit (AAU).
I-290C	01-04-91	Notice of Certification.
I-291	11-01-83	Decision on Application for Status as Permanent Resident.
I-292	10-26-90	Decision.
I-296	12-15-82	Notice to Alien Ordered Excluded by Immigration Judge.
I-305	05-01-76	Receipt of Immigration Officer—United States Bond or Notes, or Cash, Accepted as Security on Immigration Bond.
I-310	04-16-62	Bond for Payment of Sums and Fines Imposed under Immigration and Nationality Act (Term or Single Entry).
I-312	04-15-76	Designation of Attorney in Fact.
I-320B	09-01-75	Agreement Between Employer of Alien Labor and the United States.
I-323	03-15-77	Notice—Immigration Bond Breached.
I-327	02-10-93	Permit to Reenter the United States.
I-328	06-05-74	Order on Motion to Reopen Proceedings.
I-351	06-01-74	Bond Riders.
I-352	06-01-84	Immigration Bond.
I-356	09-27-75	Request for Cancellation of Public Charge Bond.
I-360	09-19-91	Petition for Amerasian, Widow(er), or Special Immigrant.
I-361	07-01-84	Affidavit of Financial Support and Intent to Petition for Legal Custody for Pub. L. 97-359 Amerasian.
I-365	07-01-84	Notice of Completion of Preliminary Processing of Petition for Public Law 97-359 Amerasian.
I-391	03-14-77	Notice—Immigration Bond Cancelled.
I-408	12-12-91	Application to Pay Off or Discharge Alien Crewman.
I-410	05-01-83	Receipt for Crew List.
I-418	07-01-74	Passenger List-Crew List.
I-420	06-11-92	Agreement (Land-Border) Between Transportation Line and United States.
I-421	06-29-58	Agreement (Overseas) Between Transportation Line and United States.
I-425	03-24-77	Agreement (For Preinspection at____) Between Transportation Line and United States.
I-426	05-01-65	Immediate and Continuous Transit Agreement Between a Transportation Line and United States of America (special direct transit procedure).
I-444	04-01-83	Mexican Border Visitors Permit.
I-485	09-09-92	Application to Register Permanent Residence or Adjust Status.
I-508	10-01-80	Waiver of Rights, Privileges, Exemptions, and Immunities.
I-508F	06-01-70	Waiver of Rights, Privileges, Exemptions, and Immunities (Under section 247(b) of the Act and under the Convention between the United States of America and the French Republic with respect to Taxes on Income and Property).
I-509	05-31-83	Notice of Proposed Change of Status.
I-510	11-15-82	Guarantee of Payment.
I-512	10-01-82	Authorization for Parole of an Alien into the United States.
I-515	08-02-83	Notice to Student or Exchange Visitor.
I-516	08-01-83	Notice of Approval or Continuation of School Approval.
I-517	08-01-83	Review of School Approval.
I-526	12-02-91	Immigrant Petition by Alien Entrepreneur.
I-538	10-29-91	Certification by Designated School Official.
I-539	12-02-91	Application to Extend/Change Nonimmigrant Status.
I-541	02-06-89	Order of Denial of Application for Extension of Stay or Student Employment or Student Transfer.
I-543	12-01-83	Order of Denial of Application for Change of Nonimmigrant Status.
I-551	01-77	Alien Registration Receipt Card.
I-566	02-11-91	Inter-Agency Record of Individual Requesting Change/Adjustment to, or from, A or G Status; or Requesting A or G Dependent Employment Authorization.
I-571	02-10-93	Refugee Travel Document.
I-586	04-77	Nonresident Alien Border Crossing Card.
I-589	08-01-91	Request for Asylum in the United States.
I-590	11-13-92	Registration for Classification as Refugee.
I-591	05-01-84	Assurance by a United States Sponsor in Behalf of an Applicant for Refugee Status.
I-594	11-01-83	Notice to Appear for Adjustment of Status.
I-600	04-11-91	Petition to Classify Orphan as an Immediate Relative.
I-600A	04-11-91	Application for Advance Processing of Orphan Petition.
I-601	04-11-91	Application for Waiver of Grounds of Excludability.
I-602	09-10-80	Application by Refugee for Waiver of Grounds of Excludability.

Form No.	Edition date	Title
I–607	02–07–72	Order Re Waiver of Excludability Pursuant to Section 212 (h), (i), and Permission to Reapply.
I–612	04–11–91	Application for Waiver of the Foreign Residence Requirement of section 212(e) of the Immigration and Nationality Act, as amended.
I–613	03–30–83	Request for United States Information Agency Recommendation section 212(e) Waiver.
I–644	11–01–82	Supplementary Statement for Graduate Medical Trainees.
I–688	05–87	Temporary Resident Card.
I–688A	05–87	Employment Authorization Card.
I–688B	01–89	Employment Authorization Card.
I–690	02–14–87	Application for Waiver of Grounds of Excludability under sections 245A or 210 of the Immigration and Nationality Act.
I–692	06–07–89	Notice of Denial, Temporary Resident.
I–693	09–01–87	Medical Examination of Aliens Seeking Adjustment of Status.
I–694	11–09–88	Notice of Appeal of Decision under section 210 or 245A of the Immigration and Nationality Act.
I–695	02–24–87	Application for Replacement of Form I–688A, Employment Authorization Card, or Form I–688, Temporary Residence Card (Under Pub. L. 99–603).
I–697A	01–26–90	Change of Address Card for Legalization, Special Agricultural Workers (SAW), and Replenishment Agricultural Workers (RAW).
I–698	11–09–88	Application to Adjust Status from Temporary to Permanent Resident (Under section 245A of Pub. L. 99–603).
I–699	10–20–88	Certificate of Satisfactory Pursuit.
I–730	11–01–85	Refugee/Asylee Relative Petition.
I–736	09–08–88	Guam Visa Waiver Information.
I–751	12–04–91	Petition to Remove Conditions on Residence.
I–760	07–22–87	Agreement Between Transportation Line, Operating Between Foreign Territory and Guam, and United States.
I–762	11–30–87	Citation Pursuant to Section 274A of the Immigration and Nationality Act.
I–765	04–11–91	Application for Employment Authorization.
I–775	05–26–88	Visa Waiver Pilot Program Agreement.
I–777	06–16–88	Application for Issuance or Replacement of Northern Mariana Card.
I–791	05–26–88	Visa Waiver Pilot Program Information Form.
I–817	09–10–91	Application for Voluntary Departure under the Family Unity Program.
I–821	05–22–91	Application for Temporary Protected Status.
I–823	05–21–91	Application—Dedicated Commuter Lane Program.
I–824	10–01–91	Application for Action on an Approved Application or Petition.
ICAO		International Civil Aviation Organization's General Declaration.
MA 7–50	04–70	Application for Alien Employment Certification. (Part I—Statement of Qualifications of Aliens MA 7–50A). (Part II—Job Offer for Alien Employment MA 7–50B).
7507	03–69	Bureau of Customs' General Declaration.

§ 299.3 Forms available from Superintendent of Documents.

The immigration and naturalization forms indicated below may be obtained upon prepayment from the Superintendent of Documents, Washington, DC 20402. Prices are set by the Superintendent of Documents, Government Printing Office, and are subject to change without notice. A small supply of these forms shall be set aside by immigration officers for free distribution and official use.

Form No.	GPO Stock No. (S/N)	Price per 100/pad
G–28	027–002–00218–1	14.00
G–325A	027–002–00277–6	21.00
G–325B	027–002–00349–7	13.00
I–9	027–002–00417–5	13.00
I–20AB/I–20ID	027–002–00373–0	25.00
I–20MN	027–002–00403–5	14.00
I–90	027–002–00433–7	21.00
I–92	027–002–00124–9	5.00
I–94 (English)	027–002–00318–7	15.00
I–95AB	027–002–00311–0	27.00
I–102	027–002–00406–0	12.00
I–129	027–002–00436–1	[1]31.00
I–129F	027–002–00389–6	9.00
I–129S	027–002–00425–6	17.00
I–130	027–002–00432–9	32.00
I–131	027–002–00424–8	11.00
I–134	027–002–00315–2	25.00
I–140	027–002–00429–9	11.00
I–408	027–002–00431–1	14.00
I–418	027–002–00320–9	11.00
I–485	027–002–00434–5	37.00
I–526	027–002–00428–1	18.00
I–538	027–002–00435–3	14.00
I–539	027–002–00420–5	14.00
I–600	027–002–00402–7	13.00
I–600A	027–002–00400–1	21.00
I–693	027–002–00355–1	27.00
I–698	027–002–00375–6	18.00
I–751	027–002–00422–1	15.00
I–824	027–002–00423–0	10.00
N–400	027–002–00419–1	17.00

[1] Per 50.

§ 299.4 Reproduction of Public Use Forms by public and private entities.

(a) *Duplication requirements.* All forms required for applying for a specific benefit in compliance with the immigration and naturalization regulations, including those which have been made available for purchase by the Superintendent of Documents as listed in § 299.3, may be printed or otherwise reproduced. Such reproduction must be by an appropriate duplicating process and at the expense of the public or private entity. Forms printed or reproduced by public or private entities shall be:

(1) In black ink or dye that will not fade or "feather" within 20 years, and

(2) Conform to the officially printed forms currently in use with respect to:

(i) Size,

(ii) Wording and language,

(iii) Arrangement, style and size of type, and

(iv) Paper specifications.

(b) *Requirements for electronic generation.* Public or private entities may electronically generate forms required for applying for a specific benefit in compliance with the immigration and naturalization regulations, at their own expense, including those which have been made available for purchase by the Superintendent of Documents as listed in § 299.3, provided that each form satisfies the following requirements:

(1) An electronic reproduction must be complete, containing all questions

which appear on the official form. The wording and punctuation of all data elements, and identifying information must match exactly. No data elements may be added or deleted. The sequence and format for each item on the form must be replicated to mirror the authorized agency form. Each item must be printed on the same page in the same location. Likewise, multiple part sets may be printed as single sheets provided that the destination of the carbon copy is clearly identified on the bottom of the form. Private entities must reproduce forms on the same colored paper that is used on the official form.

(2) The final form must match the design, format, and dimensions of the official form. All blocks must remain the same size and lines must remain the same length. No variations will be permissible.

(3) The final form must be approved for use by the Records Systems Division, Director, Policy Directives and Instructions Branch. The form should be sent to the address listed in paragraph (e) of this section, for approval.

(c) The accuracy of electronically generated forms is the responsibility of the private entities. Changes to existing forms, as announced by the Service, must be promptly incorporated into the private entity software program application. Deviations from the aforementioned standards may result in the return or denial of the applicant's application/petition for a particular benefit.

(d) Laser-printers or near-letter-quality printers should be used to print electronic forms. Dot-matrix printers that are only capable of producing draft quality documents should not be used for form generation, but may be used for the entry of data in a preprinted form where appropriate.

(e) Any form with poor print quality or other defect which renders it illegible, difficult to read, or displays added or missing data elements, will be rejected by the Service. Any problems regarding the acceptability of a specific electronic version of a particular Service form may be brought to the attention of the Records Systems Division, Director, Policy Directives and Instructions Branch, 425 "I" Street NW., room 5307, Washington, DC 20536.

§ 299.5 Display of control numbers.

The following listing includes the Immigration and Naturalization Service public use forms and reports which are cited for use throughout Title 8 of the Code of Federal Regulations, Chapter I. The information collection requirements contained in this title have been approved by the Office of Management and Budget (OMB) under the provisions of the Paperwork Reduction Act. The form numbers, titles, and OMB control numbers read as follows:

INS form No.	INS form title	Currently assigned OMB control No.
AR–11	Alien's Change of Address Card	1115–0003
G–79A	Data Relating to Beneficiary of Private Bill	1115–0044
G–146	Nonimmigrant Checkout Letter	1115–0075
G–325	Biographic Information	1115–0066
G–639	Freedom of Information/Privacy Act Request	1115–0087
G–845	Document Verification Request	1115–0122
G–845S	Document Verification Request (SAVE)	1115–0122
G–845T	Document Verification Request (TVS)	1115–0122
G–884	Request for the Return of Original Document(s)	1115–0162
G–897	Telephone Verification System Pilot Employer Assessment	1115–0186
G–942	Applicant Survey	1115–0188
I–9	Employment Eligibility Verification	1115–0136
I–17	Petition for Approval of School for Attendance by Nonimmigrant Students	1115–0070
I–20A–B/I–20ID	Certificate of Eligibility of Nonimmigrant (F–1) Student Status—For Academic and Language Students	1115–0051
I–20M–N/I–20ID	Verification of Eligibility for Nonimmigrant (M–1) Student Status for Vocational Students	1115–0051
I–43	Baggage and Personal Effects of Detailed Alien	1115–0063
I–68	Canadian Border Boat Landing Permit	1115–0065
I–90	Application to Replace Alien Registration Card	1115–0004
I–92	Aircraft/Vessel Report	1115–0078
I–94	Arrival-Depature Report	1115–0077
I–94T	Arrival-Departure Record (Transit without VISA)	1115–0139
I–94W	Nonimmigrant Visa Waiver Arrival—Departure Document	1115–0148
I–95AB	Crewman's Landing Permit	1115–0040
I–102	Application for Replacement/Initial Nonimmigrant Arrival—Departure Document	1115–0079
I–104	Alien Address Report Card	1115–0115
I–129	Petition for a Nonimmigrant Worker	1115–0168
I–129F	Petition for Alien Fiance(e)	1115–0071
I–129S	Nonimmigrant Petition Based on Blanket L Petition	1115–0128
I–130	Petition for Alien Relative	1115–0054
I–131	Application for Travel Document	1115–0005
I–134	Affidavit of Support	1115–0062
I–140	Immigrant Petition for Alien Worker	1115–0061
I–175	Application for Nonresident Alien's Canadian Border Crossing Card	1115–0047
I–190	Application for Nonresident Alien's Mexican Border Crossing Card	1115–0019
I–191	Application for Advance Permission to Return to Unrelinquished Domicile	1115–0032
I–192	Application for Advance Permission to Enter as Nonimmigrant	1115–0028
I–193	Application for Waiver of Passport and/or Visa	1115–0042
I–212	Application for Permission to Reapply for Admission into the U.S. After Deportation or Removal	1115–0099
I–243	Application for Removal	1115–0020
I–246	Application for Stay of Deportation	1115–0055
I–259C	Notice to Carrier—Acknowledgement by Carrier of Arrival of Possible Excludable Alien	1115–0172
I–356	Request for Cancellation of Public Charge Bond	1115–0046
I–360	Petition for Amerasian, Widow(er), or Special Immigrant	1115–0117
I–361	Affidavit of Financial Support and Intent to Petition for Legal Custody for Amerasian	1115–0118

INS form No.	INS form title	Currently assigned OMB control No.
I–363	Request to Enforce Affidavit of Financial Support and Intent to Petition for Legal Custody for Amerasian.	1115–0116
I–408	Application to Pay Off or Discharge Alien Crewman	1115–0073
I–418	Passenger List-Crew List	1115–0083
I–485	Application to Register Permanent Resident or Adjust Status	1115–0053
I–508	Waiver of Rights, Privileges, Exemptions, and Immunities	1115–0037
I–510	Guarantee of Payment	1115–0029
I–515	Notice to Student or Exchange Visitor	1115–0068
I–526	Immigrant Petition by Alien Entrepreneur	1115–0081
I–538	Certification by Designated School Official	1115–0060
I–539	Application to Extend/Change Nonimmigrant Status	1115–0093
I–566	Inter-Agency Record of Individual Requesting Change/Adjustment to or from, A or G Status, or Requesting A and G Dependent Employment Authorization.	1115–0090
I–589	Request for Asylum in the U.S	1115–0086
I–590	Registration for Classification as Refugee (section 207, I&N Act)	1115–0057
I–591	Assurance by a U.S. Sponsor in Behalf of an Applicant for Refugee Status	1115–0056
I–600	Petition to Classify Orphan as an Immediate Relative	1115–0049
I–660A	Application for Advance Processing or Orphan Petition	1115–0049
I–601	Application for Waiver of Grounds of Excludability	1115–0048
I–602	Application by Refugee for Waiver of Grounds of Excludability	1115–0098
I–612	Application for Waiver of the Foreign Residence Requirement	1115–0059
I–643	Health and Human Services Statistical Data for Refugee Asylee Adjusting Status	1115–0104
I–644	Supplementary Statement for Graduate Medical Trainees	1115–0108
I–690	Application for Waiver of Grounds of Excludability	1115–0132
I–693	Medical Examination of Aliens Seeking Adjustment of Status	1115–0134
I–694	Notice of Appeal of Decision	1115–0135
I–695	Application of Temporary Replacement Card	1115–0129
I–697A	Changes of Address Card	1115–0130
I–698	Application to Adjust Status from Temporary to Permanent Resident (Under Section 245A of Pub. L. 99–603).	1115–0155
I–699	Certificate of Satisfactory Pursuit	1115–0154
I–730	Refugee/Asylum Relative Petition	1115–0121
I–736	Guam Visa Waiver Information	1115–0141
I–751	Petition to Remove Conditions on Residence	1115–0145
I–760	Guam Visa Waiver Agreement	1115–0140
I–765	Application for Employment Authorization	1115–0163
I–775	Visa Waiver Pilot Program Agreement	1115–0149
I–777	Application for Issuance or Replacement of Northern Mariana Card	1115–0151
I–817	Application for Voluntary Departure under the Family Unity Program	1115–0166
I–821	Application for Temporary Protected Status	1115–0170
I–823	Application–Dedicated Commuter Lane Program	1115–0174
I–824	Application for Action on an Approved Application or Petition	1115–0176
I–829	Petition by Entrepreneur to Remove Conditions	1115–0190
I–833	INSPASS Application	1115–0179
M–398	Systematic Alien Verification for Entitlements User Satisfaction Survey	1115–0185
N–4	Monthly Report—Naturalization Papers Forwarded	1115–0189
N–14A	Arrival Information	1115–0082
N–25	Request for Verification of Naturalization	1115–0007
N–300	Application to File Declaration of Intention	1115–0008
N–336	Request for Hearing on a Decision in Naturalization Procedures under Section 336 of the Act	1115–0180
N–400	Application for Naturalization	1115–0009
N–422	Form letter re: Information from Selective Service File	1115–0011
N–426	Request for Certification of Military or Naval Service	1115–0022
N–445	Notice of Naturalization Oath Ceremony	1115–0052
N–455	Application for Transfer of Petition for Naturalization	1115–0035
N–470	Application to Preserve Residence for Naturalization Purpose	1115–0014
N–565	Application for Replacement Naturalization/Citizenship Document	1115–0015
N–600	Application for Certification of Citizenship	1115–0018
N–643	Application for Certificate of Citizenship in Behalf of an Adopted Child	1115–0152
N–644	Application for Posthumous Citizenship	1115–0173
	User Fee	1115–0142
	Judicial Recommendations Against Deportation, Controlled Substance Violations	1115–0158
	Dedicated Commuter Lane Usage Survey	1115–0181
	Guidelines on Producing Master Exhibits for Asylum Application	1115–0182
	The Immigration and Naturalization Service is Soliciting Proposals from Interested Parties to Participate in Pilot Immigration Program (Notice).	1115–0183
	Emergency Federal Law Enforcement Assistance	1115–0184
	Nonimmigrant Classes; NATO–1, 2, 3, 4, 5, 6, and 7; Control of Employment of Aliens	1115–0187

PART 499—NATIONALITY FORMS

3. The authority citation for part 499 continues to read as follows:

Authority: 8 U.S.C. 1103; 8 CFR part 2.

4. Section 499.1 is revised to read as follows:

§ 499.1 Prescribed forms.

The forms listed below are prescribed for use in compliance with the provisions of subchapter C of this chapter. To the maximum extent feasible, the forms used should bear the edition date shown or a subsequent edition date.

Form No.	Edition date	Title and description
M–288	1987	United States History 1600–1987, Level II.
M–289	1987	United States History 1600–1987, Level I.
M–290	1987	U.S. Government Structure, Level II.
M–291	1987	U.S. Government Structure, Level I.
M–302	03–16–89	For the People * * *, U.S. Citizenship Education and Naturalization Information.
M–303	03–16–89	By the People * * *, U.S. Government Structure.
M–304	03–16–89	Of the People * * *, U.S. History 1600–1988.
N–3	01–30–83	Requisition for Forms and Binders.
N–4	08–25–93	Monthly Report—Naturalization Papers Forwarded.
N–300	10–01–91	Application to File Declaration of Intention.
N–335	10–24–91	Decision on Application for Naturalization.
N–336	10–24–91	Request for Hearing on a Decision in Naturalization Proceedings under section 336 of the Act.
N–400	07–17–91	Application for Naturalization.
N–404	08–01–65	Request for Withdrawal of Petition for Naturalization.
N–410	09–07–89	Motion for Amendment of Petition (application).
N–425	02–12–82	Notice to Petitioner of Proposed Recommendation of Denial of Petition for Naturalization.
N–426	05–12–77	Request for Certification of Military or Naval Service.
N–445	01–08–92	Notice of Naturalization Oath Ceremony.
N–455	04–11–91	Application for Transfer of Petition for Naturalization.
N–459	12–15–58	Authorization to Clerk of Court to Correct Certificate of Naturalization.
N–470	04–11–91	Application to Preserve Residence for Naturalization Purposes.
N–472	04–05–82	Notice of Approval of Application to Preserve Residence.
N–480	02–05–68	Naturalization Petitions Recommended to be Granted (and) Order of Court Granting Petitions for Naturalization.
N–481	09–20–67	Naturalization Petitions Recommended to be Granted (Continuation Sheet).
N–484	02–05–68	Naturalization Petitions Recommended to be Denied (and) Order of Court Denying Petitions for Naturalization.
N–485	02–05–68	Naturalization Petitions Recommended to be Granted (on behalf of children) (and) Order of Court Granting Petitions for Naturalization.
N–550	06–30–91	Certificate of Naturalization.
N–565	07–02–91	Application for Replacement Naturalization/Citizenship Document.
N–578	10–03–62	Special Certificate of Naturalization.
N–600	04–11–91	Application for Certificate of Citizenship.
N–643	04–11–91	Application for Certificate of Citizenship in Behalf of an Adopted Child.
N–644	05–30–91	Application for Posthumous Citizenship.
N–645	07–01–90	Certificate of Citizenship.
N–646	01–03–92	Naturalization Applicants Eligible to be Administered Oath of Allegiance.
N–646A	01–03–92	Naturalization Applicants Eligible to be Administered Oath of Allegiance (Continuation Sheet).
N–647	01–15–92	Oath of Allegiance and Certificate Accountability List.
N–647A	01–15–92	Oath of Allegiance and Certificate Accountability List (Continuation Sheet).

Dated: May 6, 1994.

Doris Meissner,

Commissioner, Immigration and Naturalization Service.

[FR Doc. 94–11955 Filed 5–16–94; 8:45 am]

BILLING CODE 4410–10–M

DEPARTMENT OF TRANSPORTATION

Federal Aviation Administration

14 CFR Part 71

[Airspace Docket No. 92–ANM–26]

Realignment of Jet Routes J–163 and J–523

AGENCY: Federal Aviation Administration (FAA), DOT.

ACTION: Final rule.

SUMMARY: This rule will extend segments of Jet Routes J–163 and J–523 located in Washington, Oregon, Idaho, Wyoming, and Colorado. This action will enhance traffic flow and reduce controller workload on frequently used high altitude routes.

EFFECTIVE DATE: 0901 U.T.C., June 23, 1994.

FOR FURTHER INFORMATION CONTACT: Norman W. Thomas, Airspace and Obstruction Evaluation Branch (ATP–240), Airspace-Rules and Aeronautical Information Division, Air Traffic Rules and Procedures Service, Federal Aviation Administration, 800 Independence Avenue, SW., Washington, DC 20591; telephone: (202) 267–9230.

SUPPLEMENTARY INFORMATION:

History

On April 9, 1993, the FAA proposed to amend part 71 of the Federal Aviation Regulations (14 CFR part 71) to extend segments of J–163 and J–523 located in Washington, Oregon, Idaho, Utah, Wyoming, and Colorado (58 FR 18349).

Interested parties were invited to participate in this rulemaking proceeding by submitting written comments on the proposal to the FAA. The Idaho Air National Guard, Department of the Air Force Headquarters Air Combat Command, Headquarters 366th Wing (ACC), Headquarters 366th Operations Group (ACC), and the Department of the Air Force Headquarters Air Force Flight Standards Agency claimed that the jet route extension would adversely impact

Air Traffic Control Assigned Airspace above the Saddle, OR, and Paradise, ID, Military Operations Areas (MOA). These commenters stated that the proposal would adversely effect their ability to conduct training to maintain combat effectiveness.

The FAA has determined, after a review of procedures between the Salt Lake City Air Route Traffic Control Center and the military units, that the extension of J–523 as proposed in the notice will allow air traffic control to continue to provide the maximum service to all airspace users, including the military. ATCAA procedures will be developed through a letter of agreement between air traffic control and the military. Except for editorial changes, this amendment is the same as that proposed in the notice. Jet routes are published in paragraph 2004 of FAA Order 7400.9A dated June 17, 1993, and effective September 16, 1993, which is incorporated by reference in 14 CFR 71.1 (58 FR 36298, July 6, 1993). The jet routes listed in this document will be published subsequently in the Order.

The Rule

This amendment to part 71 of the Federal Aviation Regulations extends segments of Jet Routes J–163 and J–523 located in the vicinity of Washington State, Oregon, Idaho, Utah, Wyoming, and Colorado. This action will enhance traffic flow and reduce controller workload on frequently used high altitude routes.

The FAA has determined that this regulation only involves an established body of technical regulations for which frequent and routine amendments are necessary to keep them operationally current. It, therefore—(1) is not a "significant regulatory action" under Executive Order 12866; (2) is not a "significant rule" under DOT Regulatory Policies and Procedures (44 FR 11034, February 26, 1979); and (3) does not warrant preparation of a regulatory evaluation as the anticipated impact is so minimal. Since this is a routine matter that will only affect air traffic procedures and air navigation, it is certified that this rule will not have a significant economic impact on a substantial number of small entities under the criteria of the Regulatory Flexibility Act.

List of Subjects in 14 CFR Part 71

Airspace, Incorporation by reference, Navigation (air).

Adoption of the Amendment

In consideration of the foregoing, the Federal Aviation Administration amends 14 CFR part 71, as follows:

PART 71—[AMENDED]

1. The authority citation for part 71 continues to read as follows:

Authority: 49 U.S.C. app. 1348(a), 1354(a), 1510; E.O. 10854, 24 FR 9565, 3 CFR, 1959–1963 Comp., p. 389; 49 U.S.C. 106(g); 14 CFR 11.69.

§ 71.1 [Amended]

2. The incorporation by reference in 14 CFR 71.1 of the Federal Aviation Administration Order 7400.9A, Airspace Designations and Reporting Points, dated June 17, 1993, and effective September 16, 1993, is amended as follows:

Paragraph 2004—Jet Routes

* * * * *

J–163 [Revised]

From Baker, OR, via Boise, ID; Pocatello, ID; Rock Springs, WY; to Hayden, CO.

* * * * *

J–523 [Revised]

From Bryce Canyon, UT; Ely, NV; Rome, OR; Kimberly, OR; Klickitat, WA; Seattle, WA; Tatoosh, WA; Port Hardy, BC, Canada; Sandspit, BC, Canada; to Annette Island, AK; excluding the airspace within Canada.

* * * * *

Issued in Washington, DC, on April 21, 1994.

Harold W. Becker,

Manager, Airspace-Rules and Aeronautical Information Division.

[FR Doc. 94-11957 Filed 5–16–94, 8:45 am]

Billing Code 4910–13–P

DEPARTMENT OF ENERGY

Federal Energy Regulatory Commission

18 CFR Part 381

[Docket No. RM94–15–000]

Annual Update of Filing Fees

May 11, 1994.

AGENCY: Federal Energy Regulatory Commission.

ACTION: Final rule.

SUMMARY: In accordance with § 381.104 of the Commission's regulations, the Commission issues this update of its filing fees. This document provides the yearly update using data in the Commission's Payroll Utilization Reporting System to calculate the new fees. The purpose of updating is to adjust the fees on the basis of the Commission's costs for Fiscal Year 1993.

EFFECTIVE DATE: June 16, 1994.

FOR FURTHER INFORMATION CONTACT: Maria Bondarenko, Office of the Executive Director and Chief Financial Officer, Federal Energy Regulatory Commission, 810 First Street, NE., room 631, Washington, DC 20426, (202) 219–2877.

SUPPLEMENTARY INFORMATION: In addition to publishing the full text of this document in the **Federal Register**, the Commission also provides all interested persons an opportunity to inspect or copy the contents of this document during normal business hours in room 3308, 941 North Capitol Street, NE., Washington, DC 20426.

The Commission Issuance Posting System (CIPS), an electronic bulletin board service, provides access to the texts of formal documents issued by the Commission. CIPS is available at no charge to the user and may be accessed using a personal computer with a modem by dialing (202) 208–1397. To access CIPS, set your communications software to use 300, 1200 or 2400 baud, full duplex, no parity, 8 data bits, and 1 stop bit. The full text of this notice will be available on CIPS for 30 days from the date of issuance. The complete text on diskette in WordPerfect format may also be purchased from the Commission's copy contractor, La Dorn Systems Corporation, also located in room 3308, 941 North Capitol Street, NE., Washington, DC 20426.

The Federal Energy Regulatory Commission (Commission), by its designee the Executive Director and Chief Finanical Officer[1] is issuing this notice to update filing fees the Commission assesses for specific services and benefits provided to identifiable beneficiaries. Pursuant to § 381.104 of the Commission's regulations, the Commission is establishing updated fees on the basis of the Commission's Fiscal Year 1993 costs.[2] The adjusted fees announced in this notice are effective June 16, 1994. The new fee schedule is as follows:

FEES APPLICABLE TO THE NATURAL GAS POLICY ACT

1. Review of jurisdictional agency determinations. (18 CFR 381.402)	$100
2. Petitions for rate approval pursuant to 18 CFR 284.123(b)(2). (18 CFR 381.403)	5,440
3. Initial or extension reports for Title III transactions. (18 CFR 381.404)	120

[1] 18 CFR 375.313(a).

[2] The formula for updating the filing fees was revised in Order No. 548, 58 FR 2968 (January 7, 1993); III FERC Stats. & Regs. ¶ 30,960 (1993). Under the revised formula, for most fees, cost data from the most recent year is used to update fees based on completions and work time data from a given 6-year period.

FEES APPLICABLE TO THE NATURAL GAS POLICY ACT—Continued

Fees Applicable to General Activities	
1. Petition for issuance of a declaratory order (except under Part I of the Federal Power Act). (18 CFR 381.302)	10,930
2. Review of a Department of Energy remedial order:.	
Amount in controversy:	
$0–9,999. (18 CFR 381.303(b))	100
$10,000–29,999. (18 CFR 381.303(b))	600
$30,000 or more. (18 CFR 381.303(a))	15,960
3. Review of a Department of Energy denial of adjustment:.	
Amount in controversy:	
$0–9,999. (18 CFR 381.304(b))	100
$10,000–29,999. (18 CFR 381.304(b))	600
$30,000 or more. (18 CFR 381.304(a))	8,370
4. Written legal interpretations by the Office of the General Counsel. (18 CFR 381.305(a))	3,130
Fees Applicable to Natural Gas Pipelines:	
1. Pipeline certificate applications pursuant to 18 CFR 284.224. (18 CFR 381.207(b))	1,000
Fees Applicable to Cogenerators and Small Power Producers:	
1. Certification of qualifying status as a small power production facility. (18 CFR 381.505(a))	9,400
2. Certification of qualifying status as a cogeneration facility. (18 CFR 381.505(a))	10,640
3. Applications for exempt wholesale generator status. (18 CFR 381.801)	1,350
Fees Applicable to the Public Utility Regulatory Policies Act of 1978:	
1. 5 Megawatt exemption application. (18 CFR 381.601)	21,860

List of Subjects in 18 CFR Part 381

Electric power plants, Electric utilities, Natural gas, Reporting and recordkeeping requirements.

Christie McGue,

Executive Director and Chief Financial Officer.

In consideration of the foregoing, the Commission amends Part 381, chapter I, title 18, *Code of Federal Regulations*, as set forth below.

PART 381—FEES

1. The authority citation for Part 381 continues to read as follows:

Authority: 15 U.S.C. 717–717w; 16 U.S.C. 791–828c, 2601–2645; 31 U.S.C. 9701; 42 U.S.C. 7101–7352; and 49 U.S.C. 1–27.

§ 381.302 [Amended]

2. In § 381.302, paragraph (a) is amended by removing "§ 10,810" and adding "§ 10,930" in its place.

§ 381.303 [Amended]

3. In § 381.303, paragraph (a) is amended by removing "§ 15,780" and adding "§ 15,960" in its place.

§ 381.304 [Amended]

4. In § 381.304, paragraph (a) is amended by removing "§ 8,270" and adding "§ 8,370" in its place.

§ 381.305 [Amended]

5. In § 381.305, paragraph (a) is amended by removing "§ 3,100" and adding "§ 3,130" in its place.

§ 381.403 [Amended]

6. Section 381.403 is amended by removing "§ 5,380" and adding "§ 5,440" in its place.

§ 381.404 [Amended]

7. Section 381.404 is amended by removing "§ 110" and adding "§ 120" in its place.

§ 381.505 [Amended]

8. In § 381.505, paragraph (a) is amended by removing "§ 9,300" and adding "§ 9,400" in its place and by removing "§ 10,520" and adding "§ 10,640" in its place.

§ 381.601 [Amended]

9. Section 381.601 is amended by removing "§ 20,620" and adding "§ 21,860" in its place.

§ 381.801 [Amended]

10. Section 381.801 is amended by removing "§ 1,000" and adding "§ 1,350" in its place.

[FR Doc. 94–11886 Filed 5–16–94; 8:45 am]

BILLING CODE 6717–01–P

DEPARTMENT OF THE TREASURY

Customs Service

19 CFR Parts 10, 123, 145 and 178

[T.D. 94–47]

RIN 1515–AB40

Elimination of Certain Documentation Requirements for Articles Entered Under Various Special Tariff Treatment Programs and Provisions

AGENCY: U.S. Customs Service, Department of the Treasury.

ACTION: Final rule.

SUMMARY: This document amends the Customs Regulations by removing certain documentation requirements relating to the entry of articles claimed to be entitled to a partial duty exemption or duty-free treatment under various special tariff provisions or programs. These provisions and programs involve the following: (1) American goods returned; (2) U.S.-made photographic films and dry plates returned after having been exposed abroad; (3) goods exported for repairs or alterations; (4) U.S.-processed metal articles exported for further processing; (5) the Generalized System of Preferences; and (6) the Caribbean Basin Initiative. The amendments reduce regulatory procedures and paperwork and thus facilitate the entry process for both the public and Customs without affecting the ability of Customs to ensure compliance with the basic legal requirements under these provisions and programs.

EFFECTIVE DATE: June 16, 1994.

FOR FURTHER INFORMATION CONTACT: Craig Walker, Office of Regulations and Rulings, 202–482–6980.

SUPPLEMENTARY INFORMATION:

Background

In order to reduce regulatory procedures and paperwork and thus facilitate the merchandise entry process, on January 15, 1993, Customs published in the **Federal Register** (58 FR 4615) a notice of proposed rulemaking to amend the Customs Regulations by removing certain documentation requirements relating to the entry of articles claimed to be entitled to a partial duty exemption or duty-free treatment under various special tariff provisions or programs.

The substantive proposals set forth in the document involved the following:

1. In order to eliminate procedural burdens and delays and duplications of information collection, it was proposed to remove or revise certain paragraphs within § 10.1 of the Customs Regulations (19 CFR 10.1) to eliminate use of Customs Form 3311, Declaration for Free Entry of Returned American Products, for purposes of (a) duty-free treatment on products of the United States which are returned without having been advanced in value or improved in condition while abroad, as provided in subheading 9801.00.10, Harmonized Tariff Schedule of the United States (HTSUS), and (b) duty-free treatment on certain photographic films and dry plates manufactured in the United States and exposed abroad, as provided in subheading 9802.00.20, HTSUS. As a consequence of the elimination of Customs Form 3311 for purposes of these two tariff provisions,

the document also proposed to amend § 10.1 to require submission of a new declaration by the owner, importer, consignee or agent setting forth certain necessary and nonduplicative information elements contained on Customs Form 3311 and, where the returned article has a value of $1,000 or more and is not clearly marked with the name and address of the U.S. manufacturer, to allow the district director to require such other documentation or evidence as may be necessary to substantiate the claim for duty-free treatment.

2. Again in order to eliminate procedural burdens and delays and duplications of information collection, it was proposed to revise §§ 10.8 and 10.9 of the Customs Regulations (19 CFR 10.8 and 10.9) to eliminate use of Customs Form 4455, Certificate of Registration, for articles exported for repairs, alterations or processing and returned to the United States with a claim for reduced-duty treatment under subheading 9802.00.40, 9802.00.50 or 9802.00.60, HTSUS. As a consequence of the elimination of Customs Form 4455 for purposes of these three tariff provisions, the document also proposed to amend §§ 10.8 and 10.9 to set forth a new standard format for the declaration by the owner, importer, consignee or agent required under the regulations in order to reflect certain necessary and nonduplicative information elements contained on Customs Form 4455.

3. Finally, in order to reduce unnecessary paperwork, the document proposed to amend the Customs Regulations by eliminating use of the Certificate of Origin Form A in connection with claims for duty-free treatment under the Generalized System of Preferences (GSP) and the Caribbean Basin Initiative (CBI), principally by revising § 10.173 (19 CFR 10.173) in the case of the GSP and § 10.198 (19 CFR 10.198) in the case of the CBI. Under the revised sections, the existing GSP or CBI Declaration would, if requested by Customs, serve as the basic documentary evidence to support the claim for duty-free treatment for merchandise not wholly the growth, product, or manufacture of the producing country and, in the case of merchandise which is wholly the growth, product, or manufacture of the producing country, a statement to that effect would have to be included on the commercial invoice or entry summary.

The notice of proposed rulemaking invited public comments on the proposals, which would be considered before adoption of a final rule. The public comment period closed on March 16, 1993.

Analysis of Comments

A total of eight commenters responded to the solicitation of comments during the public comment period. Of these, four commenters put forth no objections to the proposed regulatory changes and affirmatively supported one or more aspects thereof. The remaining commenters, although generally supportive of the purpose of the proposed amendments, also presented some objections and suggested some changes regarding the proposals. These objections and suggested changes, and the Customs responses thereto, are set forth below.

Comment: It is unclear how the elimination of Customs Forms 3311 and 4455 in the circumstances described in the notice would eliminate an administrative burden on Customs and provide benefits to the trade community when essentially the same information will be required in a different format (*e.g.*, "statements" and "declarations"). The change may add an element of confusion which could negate the simplification efforts. Customs Form 3311 should be retained for articles entered under subheading 9801.00.10, HTSUS, as the form is concise, provides all the information needed by Customs, and would eliminate the need for a new document (the declaration by the owner, importer, consignee or agent). Although present § 10.1(a)(3) requires the certificate of exportation on the bottom portion of Customs Form 3311 to be executed by the district director at the port of exportation, the current version of CF 3311 contains no certificate of exportation.

Customs response: The comment regarding the certificate of exportation is correct. However, Customs notes that the present regulatory provision would take precedence so as to require a certificate of exportation even where the extant form does not include it. The elimination of Customs Form 3311 in the circumstances set forth in the notice will rectify this anomalous situation, and it is further noted that where Customs Form 3311 would continue in use, the underlying regulatory provisions (§§ 10.1 (g), (h), (i) and (j)) either do not mention, or expressly provide for non-use of, the certificate of exportation.

Customs continues to believe that the elimination of Customs Forms 3311 and 4455 under the circumstances set forth in the notice would save time and expense for both Customs and the importing community. Although the proposed amendments to § 10.1 would require the submission of a new document (the declaration by the owner, importer, consignee or agent) to reflect certain information elements of Customs Form 3311, the declaration would not include other information available elsewhere in the entry package but currently required by Customs Form 3311. Such latter information includes the port and district, the date, the entry number and date, and the marks, numbers, description and value of the articles returned.

Similar benefits would result from the elimination of Customs Form 4455 for articles entered under subheadings 9802.00.40, 9802.00.50, and 9802.00.60, HTSUS. The proposed amendments to §§ 10.8 and 10.9 would eliminate the frequently impractical and time-consuming procedure involving examination of the goods and endorsement of the Customs Form 4455 by a Customs officer prior to exportation. In addition, certain information set forth elsewhere in the entry package but currently required to be provided on Customs Form 4455 would no longer be required, including the name of the exporting carrier, the bill of lading or insured number, the reason the articles are exported, a description of the articles, and the number and kind of packages.

Although some confusion on the part of the trade community and Customs may be inevitable whenever documentation requirements are eliminated or changed in some way, Customs believes that the benefits which would accrue from eliminating unnecessary procedures and redundant information collections far outweigh any temporary difficulties that may result. In order to minimize any confusion which could otherwise result when the proposed amendments to §§ 10.1, 10.8 and 10.9 (as well as to §§ 10.173 and 10.198 relating to the elimination of the Certificate of Origin Form A) take effect as a final rule, Customs will issue appropriate instructions to Customs field offices, for dissemination to the trade community as well, regarding the changed documentation requirements.

Comment: There is no need to require that the declaration by the owner, importer, consignee or agent provided for in proposed § 10.1(a)(2) include the reason for the return of the U.S.-origin article. This information is already provided to Customs when the importer inserts on the entry summary the appropriate statistical suffix under subheading 9801.00.10, HTSUS.

Customs response: Customs agrees. Accordingly, § 10.1(a)(2) as set forth below has been modified to not include

in the declaration by the owner, importer, consignee, or agent the reason for the return of the articles.

Comment: The reference in paragraphs (a) and (b) of proposed § 10.1 to "$1,000" should be replaced by "$1,250" which is currently the general maximum for informal entries.

Customs response: Customs agrees. Accordingly, the references to "$1,000" are changed to "$1,250" in §§ 10.1(a) and (b) as set forth below.

Comment: Proposed § 10.1(b) gives the district director discretion to require "such other documentation or evidence as may be necessary to substantiate the claim for duty-free treatment" where the value of the returned articles exceeds $1,000 and they are not clearly marked with the name and address of the U.S. manufacturer. This provision should be revised to specifically identify the kind of additional documentation and evidence that would be acceptable, as well as the circumstances under which such documentation or evidence could be requested. Without this change, there would be no limit to the number and types of documents and evidence that district directors could require, perhaps resulting in increased, rather than reduced, paperwork as well as less administrative uniformity among the Customs districts.

Customs response: As a general proposition, an importer must meet its burden of satisfying a district director that articles are entitled to duty-free treatment under subheading 9801.00.10 or 9802.00.20, HTSUS. It is a common practice for district directors to request a statement from the U.S. manufacturer of the article verifying that the article was, in fact, made in the United States. In order to ensure that only those articles meeting the conditions and requirements of these tariff provisions will receive duty-free treatment, Customs believes it is important for district directors to have the discretion to require a U.S. manufacturer's certificate or some other appropriate document or other evidence of U.S. origin.

Proposed § 10.1(b) was derived, to a great extent, from the following sentence which appears on the current version of Customs Form 3311:

> If the value of the article is $10,000 or more and the articles are not clearly marked with the name and address of U.S. manufacturer, please attach copies of any documentation or other evidence that you have that will support or substantiate your claim for duty-free status as American Goods Returned.

Proposed § 10.1(b) contained a $1,000 minimum amount (changed in this document to $1,250 as stated above) rather than the $10,000 used in the above-quoted sentence because (1) the $1,000 figure appears in present § 10.1(b) which is analogous in function to proposed § 10.1(b), and (2) it was determined that use of the higher amount would unnecessarily restrict the district director's ability to ensure that only articles meeting the terms of subheading 9801.00.10 or 9802.00.20, HTSUS, would receive duty-free treatment. It should be noted that whereas the submission of additional documentation or evidence is required by the above-quoted sentence on Customs Form 3311 under the described circumstances, it was made discretionary with the district director in proposed new § 10.1(b).

Customs agrees that new § 10.1(b) should set forth examples of the types of additional documentation or evidence that would be acceptable. Accordingly, the following second sentence has been added to § 10.1(b) as set forth below: "Such documentation or evidence may include a statement from the U.S. manufacturer verifying that the articles were made in the United States, or a U.S. export invoice, bill of lading or airway bill evidencing the U.S. origin of the articles and/or the reason for the exportation of the articles."

Comment: The declaration by the foreign shipper presently required in § 10.1(a)(1) (which would remain unchanged in the proposed amendments to § 10.1) should be eliminated because it is rarely submitted or required. Moreover, since the foreign shipper usually has no specific knowledge of the origin of the returned article, his/her statement regarding the U.S. origin of the article is meaningless.

Customs response: Customs does not agree that the declaration of the foreign shipper presently required by § 10.1(a)(1) should be eliminated. It contains information which assists the district director in determining whether the imported articles meet the conditions and requirements of subheading 9801.00.10, HTSUS, such as whether the articles were advanced in value or improved in condition while abroad. The declaration similarly assists the district director in regard to entries under subheading 9802.00.20, HTSUS. If the district director determines that this declaration is unnecessary, he/she may waive production of the document pursuant to § 10.1(d).

It is true that in most cases the foreign shipper will not have specific knowledge of the U.S. origin of the returned article. For this reason, and because the declaration of the owner, importer, consignee or agent includes the identity and location of the U.S. manufacturer, Customs agrees that the portion of the declaration of the foreign shipper regarding the U.S. origin of the article should be deleted. Section 10.1(a)(1), as set forth below, has been modified accordingly.

Comment: The documentation requirements in proposed § 10.8 fail to cover articles entered duty free under statistical suffix 10 of subheading 9802.00.50, HTSUS. This statistical breakout encompasses "Articles for which duty free treatment is claimed under U.S. Note 2(b) to this subchapter" (Subchapter II, Chapter 98, HTSUS). Note 2(b) provides that no article (except textile and apparel articles, petroleum and certain petroleum products) may be treated as a foreign article or as subject to duty if it is assembled or processed in a CBI beneficiary country wholly of components or ingredients of U.S. origin and neither the article nor the components or ingredients enters the commerce of a non-CBI country.

Customs response: The statutory provision (section 222 of the Customs and Trade Act of 1990, Public Law 101–382, 104 Stat. 629) which amended Note 2 to create this separate duty-free program failed to provide for a separate HTSUS subheading under which articles qualifying for such treatment may be entered. Therefore, as a matter of administrative convenience, statistical suffix 10 of subheading 9802.00.50, HTSUS, was specifically created for the entry of certain Note 2(b) articles. The conditions and requirements of Note 2(b) are entirely different from those of subheading 9802.00.50, HTSUS. Thus, Customs believes that including the documentation requirements for Note 2(b) articles in § 10.8 would be unnecessarily confusing. Customs intends to publish separate regulatory proposals relating to Note 2(b) in the near future.

Comment: The notice proposes to eliminate the requirement in §§ 10.173 and 10.198 that the importer or consignee file a Certificate of Origin Form A with Customs in connection with the entry of articles for which duty-free treatment is claimed under the GSP and CBI. Why is the Form A also not being eliminated as a documentation requirement under the U.S.-Israel Free Trade Area Implementation Act of 1985?

Customs response: Unlike the GSP and CBI, the U.S.-Israel Free Trade Area (FTA) Agreement specifically provides in Annex 3 for the submission of a Certificate of Origin when the claim for duty-free or reduced-duty treatment is made. Therefore, eliminating the

Certificate of Origin Form A for articles claimed to be entitled to special tariff treatment under the U.S.-Israel FTA would require modifications to the Agreement itself. The United States cannot undertake such action unilaterally.

Comment: Proposed §§ 10.173(a)(2) and 10.198(a)(2), relating to the GSP and CBI, respectively, provide that where merchandise covered by a formal entry is wholly the growth, product, or manufacture of a single beneficiary country, a statement to that effect shall be included on the commercial invoice and entry summary. Requiring the statement on both the commercial invoice and entry summary is a wasteful duplication of information collection; it should be required only on the invoice.

Customs response: Customs agrees that the statement should be required only on the commercial invoice provided to Customs. Sections 10.173(a)(2) and 10.198(a)(2) as set forth below have been modified accordingly.

Comment: While the "wholly the growth, product or manufacture" statement is required by proposed §§ 10.173(a)(2) and 10.198(a)(2), no such similar statement is required by proposed §§ 10.173(a)(1) and 10.198(a)(1), relating to merchandise which is not "wholly the growth, product, or manufacture" of a beneficiary country. With the elimination of the Form A, it would be prudent to require, with respect to all merchandise for which GSP or CBI treatment is requested, a statement on the commercial invoice that the merchandise either is or is not "wholly the growth, product or manufacture" of a beneficiary country and that the merchandise satisfies all of the GSP or CBI requirements for duty-free entry. The proposed regulations should authorize the district director to waive the requirement for such a statement on the commercial invoices where he/she is otherwise satisfied that the merchandise qualifies for GSP or CBI treatment.

Customs response: In instances in which the commercial invoice does not include a statement that the merchandise is "wholly the growth, product or manufacture" of a beneficiary country, Customs believes that it can reasonably be inferred that the merchandise is not such. Thus, it is not necessary to require the suggested negative statement in those instances. Moreover, it is Customs position that when a claim for GSP or CBI treatment is made, the importer is asserting that the merchandise satisfies all of the GSP or CBI requirements for duty-free entry. Therefore, there is no need to require a separate statement on the commercial invoice that the merchandise satisfies those requirements.

Conclusion

Accordingly, based on the comments received and the analysis of those comments as set forth above, Customs believes that the proposed regulatory amendments should be adopted as a final rule with certain changes thereto as discussed above and set forth below. As a consequence of the adoption of these substantive regulatory amendments, this document also includes an appropriate update of the list of information collection approvals contained in § 178.2 of the Customs Regulations (19 CFR 178.2).

Regulatory Flexibility Act

Pursuant to the provisions of the Regulatory Flexibility Act (5 U.S.C. 601 *et seq.*), it is certified that the regulations will not have a significant economic impact on a substantial number of small entities. The regulations eliminate duplicative or otherwise unnecessary paperwork requirements and thus reduce the regulatory burden and consequent economic impact on those entities which file claims for tariff treatment under the subject provisions and programs. Accordingly, the regulations are not subject to the regulatory analysis or other requirements of 5 U.S.C. 603 and 604.

Executive Order 12866

This document does not meet the criteria for a "significant regulatory action" as specified in E.O. 12866.

Paperwork Reduction Act

The collection of information requirements contained in these final regulations have been reviewed and approved by the Office of Management and Budget in accordance with the Paperwork Reduction Act of 1980 (44 U.S.C. 3504(h)) under control number 1515–0194. The estimated average annual burden associated with this collection is .6 hours per respondent or recordkeeper. Comments concerning the accuracy of this burden estimate and suggestions for reducing this burden should be directed to the U.S. Customs Service, Paperwork Management Branch, Room 6316, 1301 Constitution Avenue, NW., Washington, DC 20229, or the Office of Management and Budget, Attention: Desk Officer for the Department of the Treasury, Office of Information and Regulatory Affairs, Washington, DC 20503.

Drafting Information

The principal author of this document was Francis W. Foote, Office of Regulations and Rulings, U.S. Customs Service. However, personnel from other offices participated in its development.

List of Subjects

19 CFR Part 10

Customs duties and inspection, Exports, Imports, Preference programs, Reporting and recordkeeping requirements.

19 CFR Part 123

Canada, Customs duties and inspection, Imports, Mexico.

19 CFR Part 145

Customs duties and inspection, Imports, Postal service.

19 CFR Part 178

Collections of information, Paperwork requirements, Reporting and recordkeeping requirements.

Amendments to the Regulations

Parts 10, 123, 145 and 178, Customs Regulations (19 CFR parts 10, 123, 145 and 178), are amended as set forth below.

PART 10—ARTICLES CONDITIONALLY FREE, SUBJECT TO A REDUCED RATE, ETC.

1. The general authority citation for Part 10 is revised, and the specific authority citations for §§ 10.171 through 10.178 and §§ 10.191 through 10.198 continue to read, as follows:

Authority: 19 U.S.C. 66, 1202 (General Note 17, Harmonized Tariff Schedule of the United States), 1481, 1484, 1498, 1508, 1623, 1624;

* * * * *

Sections 10.171 through 10.178 also issued under 19 U.S.C. 2461 *et seq.*;

Sections 10.191 through 10.198 also issued under 19 U.S.C. 2701 *et seq.*;

* * * * *

2. In § 10.1, paragraph (a)(3) is removed, and the introductory text of paragraph (a), the introductory text and paragraph of the declaration by the foreign shipper before the table in paragraph (a)(1), paragraphs (a)(2), (b), (d), (f) and (h)(2), the first sentence of paragraph (i), and the first sentence of paragraph (j)(2) are revised to read as follows:

§ 10.1 Domestic products; requirements on entry.

(a) Except as otherwise provided for in paragraph (g), (h), (i) or (j) of this section or elsewhere in this part or in § 145.35 of this chapter, the following

documents shall be filed in connection with the entry of articles in a shipment valued over $1,250 and claimed to be free of duty under subheading 9801.00.10 or 9802.00.20, Harmonized Tariff Schedule of the United States (HTSUS):

(1) A declaration by the foreign shipper in substantially the following form:

I, _____, declare that to the best of my knowledge and belief the articles herein specified were exported from the United States, from the port of _____ on or about _____, 19_____, and that they are returned without having been advanced in value or improved in condition by any process of manufacture or other means.

* * * * *

(2) A declaration by the owner, importer, consignee, or agent having knowledge of the facts regarding the claim for free entry. If the owner or ultimate consignee is a corporation, such declaration may be signed by the president, vice president, secretary, or treasurer of the corporation, or may be signed by any employee or agent of the corporation who holds a power of attorney executed under the conditions outlined in subpart C, part 141 of this chapter and a certification by the corporation that such employee or other agent has or will have knowledge of the pertinent facts. This declaration shall be in substantially the following form:

I, _____, declare that the (above) (attached) declaration by the foreign shipper is true and correct to the best of my knowledge and belief, that the articles were manufactured by _____ (name of manufacturer) located in _____ (city and state), that the articles were not manufactured or produced in the United States under subheading 9813.00.05, HTSUS, and that the articles were exported from the United States without benefit of drawback.

_____

(Date)

_____

(Address)

_____

(Signature)

_____

(Capacity)

(b) In any case in which the value of the returned articles exceeds $1,250 and the articles are not clearly marked with the name and address of the U.S. manufacturer, the district director may require, in addition to the declarations required in paragraph (a) of this section, such other documentation or evidence as may be necessary to substantiate the claim for duty-free treatment. Such other documentation or evidence may include a statement from the U.S. manufacturer verifying that the articles were made in the United States, or a U.S. export invoice, bill of lading or airway bill evidencing the U.S. origin of the articles and/or the reason for the exportation of the articles.

* * * * *

(d) If the district director is reasonably satisfied, because of the nature of the articles or production of other evidence, that the articles are imported in circumstances meeting the requirements of subheading 9801.00.10 or 9802.00.20, HTSUS, and related section and additional U.S. notes, he may waive the requirements for producing the documents specified in paragraph (a) of this section.

* * * * *

(f) In the case of photographic films and dry plates manufactured in the United States (except motion picture films to be used for commercial purposes) exposed abroad and entered under subheading 9802.00.20, HTSUS, the requirements of paragraphs (a) and (c) of this section are applicable except that the declaration by the foreign shipper provided for in paragraph (a)(1) to the effect that the articles "are returned without having been advanced in value or improved in condition by any process of manufacture or other means" shall be crossed out, and the entrant shall show on the declaration provided for in paragraph (a)(2) that the subject articles when exported were of U.S. manufacture and are returned after having been exposed, or exposed and developed, and, in the case of motion picture films, that they will not be used for commercial purposes.

* * * * *

(h) * * *

(2) The documentation described in paragraph (a) of this section shall not be required in connection with an entry for nonconsumable vessel stores and equipment on Customs Form 3311.

* * * * *

(i) When the total value of articles of claimed American origin contained in any shipment does not exceed $250 and such articles are found to be unquestionably products of the United States and do not appear to have been advanced in value or improved in condition while abroad and no quota is involved, free entry thereof may be made under subheading 9801.00.10 on Customs Form 3311, executed by the owner, importer, consignee, or agent and filed in duplicate, without regard to the requirement of filing the documentation provided for in paragraph (a) of this section, unless the Customs officer has reason to believe that Customs drawback or exemption from internal revenue tax, or both, were probably allowed on exportation of the articles or that they are otherwise subject to duty. * * *

(j) * * *

(2) After having been either rejected or returned by the foreign purchaser to the United States for credit, free entry thereof may be made under subheading 9801.00.10, HTSUS, on Customs Form 3311 (a Customs Form 7501 must be submitted as well for such articles as provided in § 143.23(h) of this chapter), executed by the owner, importer, consignee, or agent and filed in duplicate, without regard to the requirement of filing the documentation provided for in paragraph (a) of this section, unless the Customs officer has reason to believe that Customs drawback or exemption from internal revenue tax, or both, were probably allowed on exportation of the articles or that they are otherwise subject to duty.

* * *

3. Section 10.8 is revised to read as follows:

§ 10.8 Articles exported for repairs or alterations.

(a) Except as otherwise provided for in this section, the following documents shall be filed in connection with the entry of articles which are returned after having been exported for repairs or alterations and which are claimed to be subject to duty only on the value of the repairs or alterations performed abroad under subheading 9802.00.40 or 9802.00.50, Harmonized Tariff Schedule of the United States (HTSUS):

(1) A declaration from the person who performed such repairs or alterations, in substantially the following form:

I, _____, _____ declare that the articles herein specified are the articles which, in the condition in which they were exported from the United States, were received by me (us) on _____, 19_____, from _____ (name and address of owner or exporter in the United States); that they were received by me (us) for the sole purpose of being repaired or altered; that only the repairs or alterations described below were performed by me (us); that the full cost or (when no charge is made) value of such repairs or alterations are correctly stated below; and that no substitution whatever has been made to replace any of the articles originally received by me (us) from the owner or exporter thereof mentioned above.

Marks and numbers	Description of articles and of repairs or alterations	Full cost or (when no charge is made) value of repairs or alterations (see subchapter II, chapter 98, HTSUS)	Total value of articles after repairs or alterations

(Date)

(Address)

(Signature)

(Capacity)

(2) A declaration by the owner, importer, consignee, or agent having knowledge of the pertinent facts in substantially the following form:

I, _____, _____ declare that the (above) (attached) declaration by the person who performed the repairs or alterations abroad is true and correct to the best of my knowledge and belief; that the articles were not manufactured or produced in the United States under subheading 9813.00.05, HTSUS; that such articles were exported from the United States for repairs or alterations and without benefit of drawback from _____ (port) on _____, 19_____; and that the articles entered in their repaired or altered condition are the same articles that were exported on the above date and that are identified in the (above) (attached) declaration.

(Date)

(Address)

(Signature)

(Capacity)

(b) The district director may require such additional documentation as is deemed necessary to prove actual exportation of the articles from the United States for repairs or alterations, such as a foreign customs entry, foreign customs invoice, foreign landing certificate, bill of lading, or an airway bill.

(c) If the district director concerned is satisfied, because of the nature of the articles or production of other evidence, that the articles are imported under circumstances meeting the requirements of subheading 9802.00.40 or 9802.00.50, HTSUS, and related section and additional U.S. notes, he may waive submission of the declarations provided for in paragraph (a) of this section.

(d) The district director shall require at the time of entry a deposit of estimated duties based upon the full cost or value of the repairs or alterations. The cost or value of the repairs or alterations outside the United States, which is to be set forth in the invoice and entry papers as the basis for the assessment of duty under subheading 9802.00.40 or 9802.00.50, HTSUS, shall be limited to the cost or value of the repairs or alterations actually performed abroad, which will include all domestic and foreign articles furnished for the repairs or alterations but shall not include any of the expenses incurred in this country whether by way of engineering costs, preparation of plans or specifications, furnishing of tools or equipment for doing the repairs or alterations abroad, or otherwise.

4. Section 10.9 is revised to read as follows:

§ 10.9 Articles exported for processing.

(a) Except as otherwise provided for in this section, the following documents shall be filed in connection with the entry of articles which are returned after having been exported for further processing and which are claimed to be subject to duty only on the value of the processing performed abroad under subheading 9802.00.60, Harmonized Tariff Schedule of the United States (HTSUS):

(1) A declaration by the person who performed the processing abroad, in substantially the following form:

I, _____, _____ declare that the articles herein specified are the articles which, in the condition in which they were exported from the United States, were received by me (us) on _____, 19_____, from _____ (name and address of owner or exporter in the United States); that they were received by me (us) for the sole purpose of being processed; that only the processing described below was effected by me (us); that the full cost or (when no charge is made) value of such processing and the value of the articles after processing are correctly stated below; and that no substitution whatever has been made to replace any of the articles originally received by me (us) from the owner or exporter thereof mentioned above.

Marks and numbers	Description of articles and of processing	Full cost or (when no charge is made) value of processing (see subchapter II, chapter 98, HTSUS)	Total value of articles after processing

(Date)

(Address)

(Signature)

(Capacity)

(2) A declaration by the owner, importer, consignee, or agent having knowledge of the pertinent facts in substantially the following form:

I, _____, declare that the (above) (attached) declaration by the person who performed the processing abroad is true and correct to the best of my knowledge and belief; that the articles were manufactured in the United States by _____ (name and address) or, if of foreign origin, were subjected to _____ (show processes of manufacture, such as molding, casting, machining) in the United States by _____ (name and address); that the articles were not manufactured or produced in the United States under subheading 9813.00.05, HTSUS; that the articles were exported for processing and without benefit of drawback from _____ (port) on _____, 19_____; that the articles entered in their processed condition are otherwise the same articles that were exported on the above date and that are identified in the (above) (attached) declaration; and that the returned articles will be subjected to _____ (describe processing to be performed in the United States) by _____ (name and address of U.S. processor).

(Date)

(Address)

(Signature)

(Capacity)

(b) The district director may require such additional documentation as is deemed necessary to prove actual exportation of the articles from the United States for processing, such as a foreign customs entry, foreign customs invoice, foreign landing certificate, bill of lading, or an airway bill.

(c) If the district director concerned is satisfied, because of the nature of the articles or production of other evidence, that the articles are imported under circumstances meeting the requirements of subheading 9802.00.60, HTSUS, and related section and additional U.S. notes, he may waive submission of the declarations provided for in paragraph (a) of this section.

(d) The district director shall require at the time of entry a deposit of estimated duties based upon the full cost or value of the processing. The cost or value of the processing outside the United States, which is to be set forth in the invoice and entry papers as the basis for the assessment of duty under subheading 9802.00.60, HTSUS, shall be limited to the cost or value of the processing actually performed abroad, which will include all domestic and foreign articles used in the processing but shall not include the exported United States metal article or any of the expenses incurred in this country whether by way of engineering costs, preparation of plans or specifications, furnishing of tools or equipment for doing the processing abroad, or otherwise.

§ 10.172 [Amended]

5. Section 10.172 is amended by removing the last sentence.

6. The section heading and the text of section 10.173 are revised to read as follows:

§ 10.173 Evidence of country of origin.

(a) *Shipments covered by a formal entry.*

(1) *Merchandise not wholly the growth, product, or manufacture of a beneficiary developing country.*

(i) *Declaration.* In a case involving merchandise covered by a formal entry which is not wholly the growth, product, or manufacture of a single beneficiary developing country, the exporter of the merchandise or other appropriate party having knowledge of the relevant facts shall be prepared to submit directly to the district director, upon request, a declaration setting forth all pertinent detailed information concerning the production or manufacture of the merchandise. When requested by the district director, the declaration shall be prepared in substantially the following form:

GSP DECLARATION

I, _____

(name), hereby declare that the articles described below were produced or manufactured in _____ (country) by means of processing operations performed in that country as set forth below and were also subjected to processing operations in the other country or countries which are members of the same association of countries as set forth below and incorporate materials produced in the country named above or in any other country or countries which are members of the same association of countries as set forth below:

Number and date of invoices	Description of articles and quantity	Processing operations performed on articles		Materials produced in a beneficiary developing country or members of the same association	
		Description of processing operations and country of processing	Direct costs of processing operations	Description of material, production process, and country of production	Cost or value of material

Date _____
Address _____
Signature _____
Title _____

(ii) *Retention of records and submission of declaration.* The information necessary for preparation of the declaration shall be retained in the files of the party responsible for its preparation and submission for a period of 5 years. In the event that the district director requests submission of the declaration during the 5-year period, it shall be submitted by the appropriate party directly to the district director within 60 days of the date of the request or such additional period as the district director may allow for good cause shown. Failure to submit the declaration in a timely fashion will result in a denial of duty-free treatment.

(2) *Merchandise wholly the growth, product, or manufacture of a beneficiary developing country.* In a case involving merchandise covered by a formal entry which is wholly the growth, product, or manufacture of a single beneficiary developing country, a statement to that effect shall be included on the commercial invoice provided to Customs.

(b) *Shipments covered by an informal entry.* Although the filing of the declaration provided for in paragraph (a)(1)(i) of this section will not be required for a shipment covered by an informal entry, the district director may require such other evidence of country of origin as deemed necessary.

(c) *Verification of documentation.* Any evidence of country of origin submitted under this section shall be subject to such verification as the district director deems necessary. In the event that the district director is prevented from obtaining the necessary verification, the district director may treat the entry as dutiable.

7. Section 10.175 is amended by removing paragraphs (c)(3) and (c)(4), redesignating paragraph (c)(5) as (c)(3), and revising paragraph (e)(1) to read as follows:

§ 10.175 Imported directly defined.

* * * * *

(e)(1) Shipment to the U.S. from a beneficiary developing country which is a member of an association of countries treated as one country under section 502(a)(3), Trade Act of 1974, as amended (19 U.S.C. 2462(a)(3)), through the territory of a former beneficiary developing country whose designation as a member of the same association for GSP purposes was terminated by the President pursuant to section 504, Trade Act of 1974, as amended (19 U.S.C. 2464), provided the articles in the shipment did not enter into the commerce of the former beneficiary developing country except for purposes of performing one or more of the operations specified in paragraph (c)(1) of this section and except for purposes

of purchase or resale, other than at retail, for export.

* * * * *

§ 10.192 [Amended]

8. Section 10.192 is amended by removing the last sentence.

9. Section 10.198 is revised to read as follows:

§ 10.198 Evidence of country of origin.

(a) *Shipments covered by a formal entry.*

(1) *Articles not wholly the growth, product, or manufacture of a beneficiary country.*

(i) *Declaration.* In a case involving an article covered by a formal entry which is not wholly the growth, product, or manufacture of a single beneficiary country, the exporter or other appropriate party having knowledge of the relevant facts in the beneficiary country where the article was produced or last processed shall be prepared to submit directly to the district director, upon request, a declaration setting forth all pertinent detailed information concerning the production or manufacture of the article. When requested by the district director, the declaration shall be prepared in substantially the following form:

CBI Declaration

I. _____, (name), hereby declare that the articles described below (a) were produced or manufactured in _____ (country) by means of processing operations performed in that country as set forth below and were also subjected to processing operations in the other beneficiary country or countries (including the Commonwealth of Puerto Rico and the U.S. Virgin Islands) as set forth below and (b) incorporate materials produced in the country named above or in any other beneficiary country or countries (including the Commonwealth of Puerto Rico and the U.S. Virgin Islands) or in the customs territory of the United States (other than the Commonwealth of Puerto Rico) as set forth below:

Number and date of invoices	Description of articles and quantity	Processing operations performed on articles		Material produced in a beneficiary country or in the U.S.	
		Description of processing operations and country of processing	Direct costs of processing operations	Description of material, production process, and country of production	Cost or value of material

Date _____
Address _____
Signature _____
Title _____

(ii) *Retention of records and submission of declaration.* The information necessary for preparation of the declaration shall be retained in the files of the party responsible for its preparation and submission for a period of 5 years. In the event that the district director requests submission of the declaration during the 5-year period, it shall be submitted by the appropriate party directly to the district director within 60 days of the date of the request or such additional period as the district director may allow for good cause shown. Failure to submit the declaration in a timely fashion will result in a denial of duty-free treatment.

(iii) *Value added after final exportation.* In a case in which value is added to an article in a bonded warehouse or in a foreign-trade zone in the Commonwealth of Puerto Rico or in the U.S. after final exportation of the article from a beneficiary country, in order to ensure compliance with the value requirement under § 10.195(a), the declaration provided for in paragraph (a)(1)(i) of this section shall be filed by the importer or consignee with the entry summary as evidence of the country of origin. The declaration shall be properly completed by the party responsible for the addition of such value.

(2) *Merchandise wholly the growth, product, or manufacture of a beneficiary country.* In a case involving merchandise covered by a formal entry which is wholly the growth, product, or manufacture of a single beneficiary country, a statement to that effect shall be included on the commercial invoice provided to Customs.

(b) *Shipments covered by an informal entry.* Although the filing of the declaration provided for in paragraph (a)(1)(i) of this section will not be required for a shipment covered by an informal entry, the district director may require such other evidence of country of origin as deemed necessary.

(c) *Verification of documentation.* Any evidence of country of origin submitted under this section shall be subject to such verification as the district director deems necessary. In the event that the district director is prevented from obtaining the necessary verification, the district director may treat the entry as dutiable.

PART 123—CUSTOMS RELATIONS WITH MEXICO AND CANADA

1. The authority citation for Part 123 continues to read in part as follows:

Authority: 19 U.S.C. 66, 1202 (General Note 17, Harmonized Tariff Schedule of the United States), 1431, 1433, 1624;

* * * * *

Section 123.4 also issued under 19 U.S.C. 1484, 1498;

* * * * *

§ 123.4 [Amended]

2. Section 123.4(c) is amended by removing the reference "§ 10.1(f)" and adding, in its place, the reference "§ 10.1(i)".

PART 145—MAIL IMPORTATIONS

1. The general authority citation for part 145 is revised, and the specific authority citation for §§ 145.35 through 145.38 and § 145.41 continues, to read as follows:

Authority: 19 U.S.C. 66, 1202 (General Note 17, Harmonized Tariff Schedule of the United States), 1624.

* * * * *

Sections 145.35 through 145.38, 145.41, also issued under 19 U.S.C. 1498;

* * * * *

§ 145.35 [Amended]

2. Section 145.35 is amended by removing the words "an importer's declaration on Customs Form 3311" and adding, in their place, the words "the declarations provided for in § 10.1(a) of this chapter".

PART 178—APPROVAL OF INFORMATION COLLECTION REQUIREMENTS

1. The authority citation for part 178 continues to read as follows:

Authority: 5 U.S.C. 301, 19 U.S.C. 1624, 44 U.S.C. 3501 *et seq.*

2. Section 178.2 is amended by revising the listings for §§ 10.1 and 10.173, removing the listings for §§ 10.8(e), 10.9(e), and 10.191–10.198 and adding, in their place respectively, listings for §§ 10.8, 10.9, and 10.198 to read as follows:

§ 178.2 Listing of OMB control numbers.

19 CFR section	Description	OMB control No.
* * * * * * *		
§ 10.1	Declarations covering U.S. articles exported and returned without having been advanced in value or improved in condition.	1515–0194
§ 10.8	Declarations covering articles exported for repairs or alterations and returned	1515–0194
* * * * * * *		
§ 10.9	Declarations covering metal articles exported for processing and returned for further processing	1515–0194
* * * * * * *		
§ 10.173	Claim for duty-free entry of eligible articles under the Generalized System of Preferences	1515–0194
§ 10.198	Claim for duty-free entry of eligible articles under the Caribbean Basin Initiative	1515–0194
* * * * * * *		

Approved: April 28, 1994.

Samuel H. Banks,

Acting Commissioner of Customs.

[FR Doc. 94–11856 Filed 5–16–94; 8:45 am]

BILLING CODE 4820–02–P

ENVIRONMENTAL PROTECTION AGENCY

40 CFR Part 52

[DE15–1–6432; FRL–4885–5]

Approval and Promulgation of Air Quality Implementation Plans; Delaware—Small Business Stationary Source Technical and Environmental Compliance Assistance Program

AGENCY: Environmental Protection Agency (EPA).

ACTION: Final rule.

SUMMARY: EPA is approving a State Implementation Plan (SIP) revision submitted by the State of Delaware for the purpose of establishing the Delaware Small Business Stationary Source Technical and Environmental Compliance Assistance Program (SBTCP). The intended effect of this action is to approve of a program which ensures that small businesses have access to the technical assistance and regulatory information necessary to comply with the CAA. This action is being taken under section 110 of the Clean Air Act.

EFFECTIVE DATE: This rule will become effective on June 16, 1994.

ADDRESSES: Copies of the documents relevant to this action are available for public inspection during normal business hours at the Air, Radiation, and Toxics Division, U.S. Environmental Protection Agency, Region III, 841 Chestnut Building, Philadelphia, Pennsylvania 19107; and Delaware Department of Natural Resources & Environmental Control, 89 Kings Highway, P.O. Box 1401, Dover, Delaware 19903.

FOR FURTHER INFORMATION CONTACT: Lisa M. Donahue, Environmental Scientist, (215) 597–9781.

SUPPLEMENTARY INFORMATION: On January 12, 1994 (59 FR 1693), EPA published a Notice of Proposed Rulemaking (NPR) for the State of Delaware. The NPR proposed approval of the Delaware Small Business Stationary Source Technical and Environmental Compliance Assistance Program. The formal SIP revision was submitted by Delaware on January 11, 1993.

In order to gain full approval, the state program must provide for each of the following elements: (1) The establishment of a Small Business Assistance Program (SBAP) to provide technical and compliance assistance to small businesses; (2) the establishment of a Small Business Ombudsman to represent the interests of small businesses in the regulatory process; and (3) the creation of a Compliance Advisory Panel to determine and report on the overall effectiveness of the SBAP.

Delaware Department of Natural Resources and Environmental Control is authorized to create and administer the SBTCP, and create the Small Business Ombudsman. Through an executive order, the Governor of the State of Delaware will establish the Compliance Advisory Panel.

Other specific requirements of the Small Business Stationary Source Technical and Environmental Compliance Assistance Program and the rationale for EPA's proposed action are explained in the NPR and will not be restated here. No public comments were received on the NPR.

Final Action

EPA is approving the Delaware Small Business Stationary Source Technical and Environmental Compliance Assistance Program as a revision to the Delaware SIP.

Nothing in this action should be construed as permitting or allowing or establishing a precedent for any future request for revision to any state implementation plan. Each request for revision to the state implementation plan shall be considered separately in light of specific technical, economic, and environmental factors and in relation to relevant statutory and regulatory requirements.

This action has been classified as a Table 3 action for signature by the Regional Administrator under the procedures published in the **Federal Register** on January 19, 1989 (54 FR 2214–2225), as revised by an October 4, 1993 memorandum from Michael H. Shapiro, Acting Assistant Administrator for Air and Radiation. A future notice will inform the general public of these tables. On January 6, 1989, the Office of Management and Budget (OMB) waived Table 2 and Table 3 SIP revisions (54 FR 2222) from the requirements of Section 3 of Executive Order 12291 for a period of two years. The U.S. EPA has

submitted a request for a permanent waiver for Table 2 and 3 SIP revisions. The OMB has agreed to continue the temporary waiver until such time as it rules on U.S. EPA's request. This request continues in effect under Executive Order 12866, which superseded Executive Order 12291 on September 30, 1993.

Under section 307(b)(1) of the Clean Air Act, petitions for judicial review of this action must be filed in the United States Court of Appeals for the appropriate circuit by July 18, 1994. Filing a petition for reconsideration by the Administrator of this final rule does not affect the finality of this rule for the purposes of judicial review nor does it extend the time within which a petition for judicial review may be filed, and shall not postpone the effectiveness of such rule or action. This action may not be challenged later in proceedings to enforce its requirements. (See section 307(b)(2).)

List of Subjects in 40 CFR Part 52

Environmental protection, Air pollution control, Small Business Assistance Program.

Dated: May 14, 1994.

Stanley L. Laskowski,

Acting Regional Administrator, Region III.

40 CFR part 52, subpart I of chapter I, title 40 is amended as follows:

PART 52—[AMENDED]

1. The authority citation for Part 52 continues to read as follows:

Authority: 42 U.S.C. 7401–7671q

Subpart I—Delaware

2. Part 52, subpart I is amended by adding section 52.460 to read as follows:

§ 52.460 Small Business Stationary Source Technical and Environmental Compliance Assistance Program.

(a) On January 11, 1993, the Director of the Delaware Department of Natural Resources and Environmental Control submitted a plan for the establishment and implementation of a Small Business Stationary Source Technical and Environmental Compliance Assistance Program as a State Implementation Plan revision, as required by title V of the Clean Air Act. EPA approved the Small Business Stationary Source Technical and Environmental Compliance Assistance Program on May 17, 1994, and made it a part of the Delaware SIP. As with all components of the SIP, Delaware must implement the program as submitted and approved by EPA.

[FR Doc. 94–11987 Filed 5–16–94; 8:45 am]

BILLING CODE 6560–50–P

DEPARTMENT OF TRANSPORTATION

Federal Highway Administration

49 CFR Part 393

[FHWA Docket No. MC–90–1]

RIN 2125–AC49

Parts and Accessories Necessary for Safe Operation; Front Wheel Brakes on Mexican Commercial Motor Vehicles

AGENCY: Federal Highway Administration (FHWA), DOT.

ACTION: Final rule.

SUMMARY: The FHWA is adopting as a final rule an interim final rule requiring Mexican commercial motor vehicles (CMVs) operated in the United States to be equipped with brakes acting on all wheels. The interim final rule, published on November 24, 1989, allowed Mexican CMVs to operate without front wheel brakes until January 1, 1991 (54 FR 48616). Since January 1, 1991, Mexican CMVs have been required to comply with the front wheel brake requirements of the Federal Motor Carrier Safety Regulations (FMCSRs).

It is the intent of this final rule to remove obsolete language concerning the brake requirements from the FMCSRs.

EFFECTIVE DATE: June 16, 1994.

FOR FURTHER INFORMATION CONTACT: Ms. Deborah M. Freund, Office of Motor Carrier Standards, (202) 366–2981, or Mr. Charles Medalen, Office of the Chief Counsel, (202) 366–1354, Federal Highway Administration, Department of Transportation, 400 Seventh Street, SW., Washington, DC 20590. Office hours are from 7:45 a.m. to 4:15 p.m., e.t., Monday through Friday, except legal Federal holidays.

SUPPLEMENTARY INFORMATION:

Background

Section 9102(b) of the Truck and Bus Safety and Regulatory Reform Act of 1988 (the Act) [Title IX, Subtitle B of the Anti-Drug Abuse Act of 1988, Public Law 100–690, 102 Stat. 4181, 4528] required the Secretary of Transportation to exempt certain foreign motor carriers from part 393 of the FMCSRs, for a period of one year, beginning on November 18, 1988. The Act also required the Secretary to submit a report to Congress on the effects of the delay in application of part 393 along with recommendations on the extent to which foreign motor carriers may or should be required to comply with all or any of the requirements contained in part 393.

The FHWA addressed the requirements of the Act by publishing a final rule and request for comments amending the general applicability provisions of the FMCSRs on March 24, 1989 (54 FR 12200). The required report to Congress was submitted in the form of a letter to Vice President Quayle and House Speaker Foley on September 29, 1989. The report recommended that the part 393 exemption created by the Act be allowed to lapse, with the exception of the front wheel brake requirement, and that Mexican motor carriers operating in border commercial zones be given until January 1, 1991, to comply with that standard. The report specifically recommended that the requirement for front wheel brakes apply to all Mexican CMVs manufactured on or after July 25, 1980, the effective date of the Federal Motor Vehicle Safety Standard No. 121 amendment requiring newly manufactured vehicles to be equipped with brakes on all axles. The report noted that a similar transition period was provided to both Canadian and U.S. motor carriers when the requirement was instituted in 1987.

Consistent with the recommendation in the Secretary's report to Congress, the FHWA published an interim final rule allowing Mexican CMVs to operate without front wheel brakes until January 1, 1991 (November 24, 1989, 54 FR 48616). The interim final rule amended § 393.42 to include an exemption to the front wheel brake requirement for Mexican trucks and truck tractors with three or more axles and manufactured on or after July 25, 1980.

Discussion of Comments

The FHWA received three comments in response to the interim final rule. The commenters were the Greater Las Cruces Economic Development Council, the Asociacion de Maquiladoras de Matamoros, A.C., and the U.S. Department of Agriculture, Office of Transportation (USDA).

The Greater Las Cruces Economic Development Council and the Asociacion de Maquiladoras de Matamoros both submitted comments, through U.S. Senators, in opposition to the provisions of the interim final rule. Both organizations enclosed a copy of an undated bulletin from the Border Trade Alliance (BTA), a grassroots organization of financial groups, businesses, trade associations, and others seeking to educate, build consensus, and solve problems related to border trade interests. The bulletin discussed two reports submitted to the Congress in response to the 1988 Act, the DOT report, and a second report

prepared by the BTA. The BTA report recommended that Mexican trucks manufactured post-1981 be exempted from the front wheel brake requirement, and that pre-1981 vehicles not be subject to the requirements of part 393 at all. The rationale provided was that Mexico's farmers operate older, pre-1981 vehicles, and that "any restriction on the entry of these vehicles would seriously affect agricultural trade between the U.S. and Mexico * * *. Despite the lack of general compliance with U.S safety equipment standards, accident and insurance data indicated that these vehicles do not represent a threat to public safety, i.e., they are road worthy, and therefore should not be prohibited access to U.S. border commercial zones. These findings indicate that different manufacturing standards in Mexico do not compromise safety in U.S. border communities." The BTA's bulletin added that the DOT report "was submitted without the thorough investigation mandated by Congress." The bulletin proposed that the DOT consider exempting "older vehicles of Mexican manufacture" from the requirements of part 393 for a period of 3 years from January 1, 1991, the effective date for Mexican motor carriers to comply with § 393.42. Neither the Greater Las Cruces Economic Development Council nor the Asociacion de Maquiladoras de Matamoros provided a copy of BTA's report to Congress in their submittals to the docket. The BTA's bulletin did not include even summary information on accident or insurance data.

The FHWA notes that § 393.42(b)(1)(i) provides an exception to the general requirement for CMVs to be equipped with brakes acting on all wheels: Trucks or truck tractors having three or more axles need not have brakes on the front wheels if the vehicle was manufactured before July 24, 1980. Therefore, nearly all pre-1981 three axle trucks and truck tractors would automatically be covered by this exception.

The USDA submitted comments in support of the interim final rule. The USDA maintained that prohibiting Mexican motor carriers access to border commercial zones would have a significant economic impact on U.S.-Mexico border communities and overall agricultural trade between the U.S. and Mexico. The agency supported the transition period the FHWA provided for Mexican motor carriers to comply with § 393.42. The USDA agreed with the FHWA's decision that the transition period not extend beyond January 1, 1991.

Over three years have passed since the end of the transition period announced in the 1989 interim final rule. As the North American Free Trade Agreement (NAFTA) is implemented, cross-border trade will increase. Although the BTA has asserted that Mexican CMVs do not compromise safety in U.S. border communities, the FHWA notes that, in accordance with the access phase-in schedule in NAFTA, these CMVs will no longer be restricted to commercial border zones, but may begin operating well into the interior of the U.S., and into Canada. It is imperative that all CMVs using the U.S. highways do so with a high level of safety. The U.S., Canada, and Mexico are working together to harmonize their CMV safety regulations applicable to drivers, vehicles, and motor carriers.

FHWA Decision

The FHWA believes the interim final rule should be adopted as a final rule. The deadline for compliance with the front wheel brake requirement has passed with no indication that the requirement has had an adverse impact on Mexican motor carriers. Contrary to the assertions of the Greater Las Cruces Economic Development Council and the Association de Maquiladoras de Matamoros, the FHWA does not believe that exceptions to the requirements of part 393 in general, or the front wheel brake requirements in particular, are necessary for Mexican motor carriers. The DOT Report to Congress provides a thorough analysis of the issue and fully supports the FHWA's decision to require that Mexican CMVs manufactured on or after July 25, 1980, be equipped with front wheel brakes.

The FHWA notes that part 393 of the FMCSRs provides basic equipment standards intended to help ensure the safe operation of CMVs within the United States regardless of the principal place of business of the motor carrier. As such, all CMVs operated in the United States and manufactured on or after July 25, 1980, must be equipped with front wheel brakes.

In consideration of the January 1, 1991, expiration date for the exception to the front wheel brake requirements for Mexican CMVs, the FHWA is amending § 393.42 to remove this exception found at § 393.42(b)(4).

Rulemaking Analyses and Notices

Executive Order 12866 (Regulatory Planning and Review) and DOT Regulatory Policies and Procedures

The FHWA has determined that this action is not a significant regulatory action within the meaning of Executive Order 12866 or significant within the meaning of Department of Transportation regulatory policies and procedures. This final rule merely adopts the interim final rule which allowed Mexican motor carriers until January 1, 1991, to comply with the requirements of § 393.42. Since the January 1, 1991, expiration date for the exemption has passed, and CMVs subject to the FMCSRs are currently required to comply with all applicable requirements of part 393, it is anticipated that the economic impact of this rulemaking will be minimal; therefore, a full regulatory evaluation is not required.

Regulatory Flexibility Act

In compliance with the Regulatory Flexibility Act (5 U.S.C. 601 *et seq.*), the FHWA has evaluated the effects of this rule on small entities. This final rule adopts the November 24, 1989, interim final rule which allowed Mexican motor carriers until January 1, 1991, to comply with the requirements of § 393.42. Since the January 1, 1991, expiration date for the exemption has passed, and CMVs subject to the FMCSRs are currently required to comply with all applicable requirements of part 393, the FHWA believes the economic impact on small entities will be minimal. Therefore, the FHWA hereby certifies that this action will not have a significant economic impact on a substantial number of small entities.

Executive Order 12612 (Federalism Assessment)

This action has been analyzed in accordance with the principles and criteria contained in Executive Order 12612, and it has been determined that this action does not have sufficient federalism implications to warrant the preparation of a federalism assessment.

Executive Order 12372 (Intergovernmental Review)

Catalog of Federal Domestic Assistance Program Number 20.217, Motor Carrier Safety. The regulations implementing Executive Order 12372 regarding intergovernmental consultation on Federal programs and activities apply to this program.

Paperwork Reduction Act

This action does not contain a collection of information requirement for purposes of the Paperwork Reduction Act of 1980, 44 U.S.C. 3501 *et seq.*

National Environmental Policy Act

The agency has analyzed this action for the purpose of the National Environmental Policy Act of 1969 (42 U.S.C. 4321 *et seq.*) and has determined

that this action would not have any effect on the quality of the environment.

Regulation Identification Number

A regulation identification number (RIN) is assigned to each regulatory action listed in the Unified Agenda of Federal Regulations. The Regulatory Information Service Center publishes the Unified Agenda in April and October of each year. The RIN contained in the heading of this document can be used to cross reference this action with the Unified Agenda.

List of Subjects in 49 CFR Part 393

Freight transportation, Highway safety, Highways and roads, Motor carriers, Motor vehicle safety, Parts and accessories.

Issued on: May 9, 1994.

Rodney E. Slater,

Federal Highway Administrator.

In consideration of the foregoing, the FHWA is amending title 49, Code of Federal Regulations, part 393, as follows:

PART 393—[AMENDED]

1. The authority citation for part 393 continues to read as follows:

Authority: 49 U.S.C. 3102; 49 U.S.C. app. 2505; 49 CFR 1.48.

§ 393.42 [Amended]

2. In § 393.42, paragraph (b)(4) is removed.

[FR Doc. 94–11962 Filed 5–16–94; 8:45 am]

BILLING CODE 4910–22–P

National Highway Traffic Safety Administration

49 CFR Part 526

[Docket No. 93–25; Notice 2]

RIN 2127–AE65

Petitions and Plans for Relief Under the Automobile Fuel Efficiency Act of 1980

AGENCY: National Highway Traffic Safety Administration (NHTSA), Department of Transportation (DOT).

ACTION: Final rule.

SUMMARY: This rule addresses the agency regulations setting forth content requirements for petitions to be submitted by automobile manufacturers to obtain relief from certain aspects of the Corporate Average Fuel Economy (CAFE) program. NHTSA is rescinding those portions of the regulations that are no longer needed, and updating certain others.

DATES: The amendments made by this rule are effective June 16, 1994. Petitions for reconsideration should be submitted by June 16, 1994.

ADDRESSES: Submit petitions for reconsideration to: Administrator, National Highway Traffic Safety Administration, 400 Seventh Street SW., Washington, DC 20590.

FOR FURTHER INFORMATION CONTACT: Mr. Orron Kee, Office of Market Incentives, National Highway Traffic Safety Administration, room 5313, 400 Seventh Street SW., Washington, DC 20590, (202) 366–0846.

SUPPLEMENTARY INFORMATION:

I. History

In 1972, Congress enacted the Motor Vehicle Information & Cost Saving Act ("the Act") (15 U.S.C. 1901, *et seq.*). Title V, Improving Automotive Efficiency (15 U.S.C. 2001–13) was added to the Act in 1975. Title V established the CAFE program.

The Act specifies that, in general, each manufacturer's domestically manufactured (*i.e.*, those with at least 75 percent U.S. or Canadian content) and imported passenger automobiles must comply separately with CAFE standards. This provision was originally enacted to discourage domestic auto manufacturers from merely importing increasing numbers of fuel efficient, foreign produced cars to comply with standards.

In 1980, Congress determined that the original provision regarding domestic content could have two undesired effects. First, it could discourage foreign manufacturers that wished to begin U.S. production. Second, it could discourage manufacturers that wished to transfer a non-domestic automobile to their domestic fleets by gradually increasing the domestic content of the automobile. In response to these and other concerns, Congress passed the Automobile Fuel Efficiency Act (AFEA), amending Title V of the Act by adding a number of provisions intended to facilitate compliance with the CAFE standards.

To address the first situation, Congress adopted a provision, found in section 503(b)(3) of the Act, applicable to foreign manufacturers that began U.S. production either (1) after December 22, 1975 and before May 1, 1980 or (2) on or after May 1, 1980 and for at least one model year ending on or before December 31, 1985. Such manufacturers could be exempted from the Act's requirements that their fleets be separated into domestic and non-domestic subfleets for CAFE compliance purposes if they submitted, and NHTSA approved, a petition demonstrating that granting the exemption would not adversely affect employment in the U.S. automobile industry.

To address the second situation, Congress added section 503(b)(4) to the Act. It applies to a manufacturer that wishes to convert a vehicle from non-domestic to domestic status over a period of several model years, and to begin including the vehicle in its domestic fleet from the very beginning of the conversion period. There is no model year limitation on exercising this provision. To obtain exemption from the domestic content provision under section 503(b)(4), a petitioner must show that (among other things) it would achieve at least 75 percent domestic content within four model years.

The AFEA also made a number of other amendments to the Act. It added section 502(k) to the Act to authorize special relief for manufacturers that were unable to comply with one or more of the 4-wheel drive (4WD) light truck fuel economy standards in MYs 1982–85.

Finally, the AFEA added section 502(l) to the Act to authorize special relief for manufacturers that fell short of a fuel economy standard in one year, but expected to exceed a fuel economy standard in a future model year. Section 502(l) provides that the credits that a manufacturer expects to earn for a future model year can be made available up to three years in advance of that year in order to offset civil penalties which would otherwise be assessed for a shortfall in one of those three years, provided that the manufacturer submits (and the agency approves) a plan for earning the necessary credits in the future, and that the manufacturer actually earns the credits.

On July 29, 1982, the agency published a final rule establishing part 526 setting forth requirements for the contents of petitions to obtain the various types of relief authorized by the AFEA's amendments to the Act. (47 FR 32721). The principal provisions of part 526 are:

- Section 526.2, specifying requirements relating to section 503(b)(3) (commencement of U.S. production);
- Section 526.3, specifying requirements relating to 503(b)(4) (transfer of models from non-domestic to domestic fleet);
- Section 526.4, specifying requirements relating to section 502(k) (adjustment of CAFE standards for 4-wheel drive light trucks); and
- Section 526.5, specifying requirements relating to section 502(l) (offsetting compliance shortfall with future credits).

On May 20, 1993, the agency published a NPRM (58 FR 29378) proposing to rescind those sections of the implementing regulation that were no longer required because the passage of time rendered them obsolete, and to amend certain language in the regulation that was inconsistent (*e.g.*, different ways of referring to the same statutory text).

Since NHTSA did not receive any comments in response to the NPRM, it is adopting the amendments as proposed. This final rule rescinds certain parts of the implementing regulation, and makes the other minor changes that are fully described below.

II. Changes to Part 526

A. Rescission of § 526.4, Relating to the Adjustment of Fuel Economy Standards for 4-Wheel Drive Light Trucks

Section 526.4 describes the procedures for manufacturers to petition for relief from light truck CAFE standards applicable to 4WD light trucks for MYs 1982–85. This procedure implements section 502(k) of the Act.

To be granted the relief provided by section 502(k) with respect to one or more of those model years, a manufacturer must demonstrate that it cannot meet the fuel economy standard for that year without suffering a severe economic impact, such as plant closures or layoffs. Although the timing of the petition is not expressly specified, the use of the subjunctive mood regarding the finding to be made by the agency indicates that the petition had to be filed before the start of the model year for which the relief was requested. No petitions were filed under this section for these long past model years.

Accordingly, NHTSA believes that section 502(k) and its implementing regulatory provision in § 526.4 are moot. The agency is therefore rescinding this provision.

B. Deletion of Final Sentence of § 526.5(a) Relating to Separation of Light Truck Fleets Into 2-Wheel and 4-Wheel Drive Fleets

Section 526.5 specifies the content of manufacturers' plans for earning CAFE credits in future years to offset current year penalties. The provision implements section 502(l) of the Act. As noted above, under section 502(l), a manufacturer may avoid violating the Act and paying a civil penalty for falling short of a standard in one model year if the manufacturer submits to the agency a plan showing that it reasonably anticipates earning enough credits during the next three model years to offset the shortfall.

A portion of § 526.5 has become moot. The last sentence in § 526.5(a) provides that the information specified in § 526.4(e) is to be submitted in connection with any contemplated transfer of CAFE credit between classes of light trucks. As noted above, all of § 526.4 is being rescinded by this notice. Accordingly, the agency is also deleting the last sentence of § 526.5(a). The meaning of § 526.5(a) will remain unchanged.

C. Redesignation of Citations to AFEA

Although the regulatory relief provisions of the AFEA were added by the AFEA to the Act, part 526 does not uniformly cite the Act. For example, the part references the relevant sections of the AFEA whenever it discusses petitions and plans specified by the AFEA, but references the Act in other places. The lack of consistency in the citations is a potential source of confusion and inconvenience to the public. Therefore, the agency is converting all references in part 526 to the AFEA into references to the corresponding sections of the Act.

D. Change to Title of 49 CFR 526.3

The title of § 526.3 is being changed from "Transfer of vehicle from foreign to U.S. production" to "Transfer of vehicle from non-domestic to domestic fleet." Section 526.3 implements section 503(b)(4) of the Act, which allows manufacturers to average certain non-domestic models with their domestic fleets if (1) these models have not been previously domestically manufactured, (2) these models have at least 50 percent domestic content, and (3) the manufacturer will raise the domestic content of these models to a minimum of 75 percent within four model years. Section 503(b)(4) of the Act says nothing about actually "transferring" a vehicle from foreign to domestic "production". A vehicle assembled in the U.S. or Canada, but containing less than 75 percent domestic content, could be eligible under this provision. Additionally, there is no reference to any specific country as a production site. The change in the title of § 526.3 will therefore reflect more accurately the language of the Act.

E. Change in Text of 49 CFR 526.3(a)

Section 503(b)(4)(A)(ii) of the Act states that at least 50 percent of the cost to the manufacturer of each automobile covered by the manufacturer's petition regarding transfer from non-domestic fleet to domestic fleet should be attributable to "value added in the United States or Canada." By adding the words "or Canadian" to the phrase "those with 50 to 75 percent U.S. value added," the text of § 526.3(a) will accurately reflect the meaning of the Act. Additionally, for the sake of clarification, the wording of § 526.3(a) will read "those with at least 50 percent, but less than 75 percent."

III. Regulatory Analysis

A. Executive Order 12866, Regulatory Planning and Review, and DOT Regulatory Policies and Procedures

This notice was not reviewed under Executive Order 12866. The agency has considered the economic implications of these amendments and determined that these amendments are not significant within the meaning of the DOT Regulatory Policies and Procedure. No regulatory evaluation was prepared by the agency because the amendments to the regulation will not have any economic effects. The primary effect of the amendments will be to remove from the Code of Federal Regulations content requirements for a type of petition that can no longer by submitted to the agency.

B. Regulatory Flexibility Act

In accordance with the Regulatory Flexibility Act, the agency has considered the impact that this rulemaking will have on small entities. I certify that this action will not have a significant economic impact on a substantial number of small entities. Therefore, a regulatory flexibility analysis is not required for this action. As noted above, these amendments will not have any economic effects. In the case of small businesses, small organizations, and small governmental units which purchase automobiles and light trucks, these amendments will not affect the availability of fuel efficient automobiles or light trucks or have any significant effect on the overall cost of purchasing and operating an automobile or light truck.

C. Impact of Federalism

This action has been analyzed in accordance with the principles and criteria contained in Executive Order 12612, and it has been determined that the action does not have sufficient Federalism implications to warrant the preparation of a Federalism Assessment.

D. Executive Order 12778 (Civil Justice Reform)

This rule does not have any retroactive effect. Under section 509(a) of the Act (15 U.S.C. 2009(a)), whenever a Federal motor vehicle fuel economy standard is in effect, a state may not adopt or maintain separate fuel economy standards applicable to

vehicles covered by the Federal standard. Section 504 of the Act (15 U.S.C. 2004) sets forth a procedure for judicial review of final rules establishing, amending or revoking Federal average fuel economy standards. That section does not require submission of a petition for reconsideration or other administrative proceedings before parties may file suit in court.

E. Environmental Impacts

The agency has analyzed the environmental impacts of the amendments to part 526 in accordance with the National Environmental Policy Act, 42 U.S.C. 4321 et seq. The agency has concluded that they will not have a significant effect on the quality of the human environment.

List of Subjects in 49 CFR Part 526

Energy conservation, Motor vehicles.

PART 526—[AMENDED]

In consideration of the foregoing, 49 CFR part 526 is amended to read as follows:

1. The authority citation for part 526 is revised to read as follows:

Authority: 15 U.S.C. 2002 and 2003; delegation of authority at 49 CFR 1.50.

2. Section 526.1(b) and (c) are revised to read as follows:

§ 526.1 General provisions.

* * * * *

(b) *Address.* Each petition and plan submitted under the applicable provisions of sections 502 and 503 of the Motor Vehicle Information and Cost Savings Act must be addressed to the Administrator, National Highway Traffic Safety Administration, 400 Seventh Street, SW., Washington DC 20590.

(c) *Authority and scope of relief.* Each petition or plan must specify the specific provision of the Motor Vehicle Information and Cost Savings Act under which relief is being sought. The petition or plan must also specify the model years for which relief is being sought.

3. The introductory text of § 526.2 is revised to read as follows:

§ 526.2 U.S. production by foreign manufacturer.

Each petition filed under section 503(b)(3) of the Motor Vehicle Information and Cost Savings Act must contain the following information:

* * * * *

4. The heading, introductory text and introductory text of paragraph (a) of § 526.3 are revised to read as follows:

§ 526.3 Transfer of vehicle from non-domestic to domestic fleet.

Each plan submitted under section 503(b)(4) of the Motor Vehicle Information and Cost Savings Act must contain the following information:

(a) For each model year for which relief is sought in the plan and for each model type of automobile sought to be included by the submitter in its domestic fleet under the plan (i.e., those with at least 50 percent but less than 75 percent U.S. or Canadian value added), provide the following information:

* * * * *

§ 526.4 [Removed and Reserved]

5. Section 526.4 is removed and reserved.

6. The introductory text and paragraph (a) of § 526.5 is revised to read as follows:

§ 526.5 Earning offsetting monetary credits in future years.

Each plan submitted under section 502(l) of the Motor Vehicle Information and Cost Savings Act must contain the following information:

(a) Projected average fuel economy and production levels for the class of automobiles which may fail to comply with a fuel economy standard and for any other classes of automobiles from which credits may be transferred, for the current model year and for each model year thereafter ending with the last year covered by the plan.

* * * * *

Issued: May 11, 1994.

Christopher A. Hart,

Deputy Administrator.

[FR Doc. 94–11918 Filed 5–16–94; 8:45 am]

BILLING CODE 4910–59–P

---

49 CFR Part 571

[Docket No. 93–58; Notice 02]

RIN 2127–AE74

Federal Motor Vehicle Safety Standards; Tire Selection and Rims for Motor Vehicles Other Than Passenger Cars

AGENCY: National Highway Traffic Safety Administration (NHTSA), DOT.

ACTION: Final rule.

SUMMARY: This rule amends Federal Motor Vehicle Safety Standard (FMVSS) 120, Tire Selection and Rims for Motor Vehicles Other than Passenger Cars, to permit the date of manufacture of wheel rims to be shown by means of appropriate symbols rather than numerically as presently required by FMVSS 120. This will give manufacturers increased flexibility in achieving compliance.

DATES: The amendment made in this final rule is effective June 16, 1994.

Any petitions for reconsideration must be received by NHTSA not later than June 16, 1994.

ADDRESSES: Any petitions for reconsideration should refer to the docket and notice numbers of this notice and be submitted to: Docket Section, National Highway Traffic Safety Administration, 400 Seventh Street, SW., room 5109, Washington, DC 20590. Docket room hours are 9:30 a.m. to 4 p.m., Monday through Friday.

FOR FURTHER INFORMATION CONTACT: Mr. Larry Cook, Office of Vehicle Safety Standards, National Highway Traffic Safety Administration, 400 Seventh Street, SW., room 5307, Washington, DC 20590. Telephone: (202) 366–4803.

SUPPLEMENTARY INFORMATION:

Background

Section S5.2, Rim Marking, FMVSS 120, requires that each rim and single piece wheel disc shall be marked with the information specified in that section. Paragraph S5.2(e) requires that the day, month, and year of manufacture or the month of manufacture shall be expressed on the rim in numerals.

Proposal

By notice of proposed rulemaking (NPRM) dated September 3, 1993 (58 FR 46938), NHTSA proposed to amend paragraph S5.2(e) to permit the use of symbols to express the date of manufacture of wheel rims. The proposal was issued in response to a petition submitted by Alloy Wheels International, Ltd. (AWI). In its petition, AWI suggested that NHTSA permit the use of a symbol resembling a clock face to express the date of manufacture of wheel rims. The symbol, approximately 19 millimeters (¾ inch) in diameter, is divided into 12 sections corresponding to the hour segments of a clock. Each segment represents a month of the year, commencing with the segment between 12 and 1 o'clock representing January, the segment between 1 and 2 o'clock representing February, and so on concluding with the segment between 11 o'clock and 12 o'clock representing December. The month of manufacture is shown by a dot in the middle of the appropriate clock segment. The year is indicated by two numbers in the center of the symbol, such as "94" for "1994," and the day, if any, appears under the heading "DAY."

After reviewing the petition, the agency proposed the amendment suggested in the petition. The agency

was concerned, however, that if adoption of the proposal resulted in a proliferation of symbols used by manufacturers, it might be difficult for the agency and consumers to decipher the meaning of some of them. Accordingly, the agency further proposed in the NPRM that prior to any manufacturer's use of a symbol to show the date of manufacture of a wheel rim, that manufacturer must notify NHTSA in writing of the symbol it intends to use. Such notification would be required to be submitted to NHTSA not less than 60 days before the symbol is first used. The notification would describe the symbol to be used, how it expressed the date of manufacture, specify where the symbol would appear on the rim, and include an actual-size depiction of the symbol. This one-time notification would also include the name and address of each manufacturer utilizing the symbol in question and the name and address of the trademark owner of the symbol, if any. Although such notifications would be placed in NHTSA's public docket, manufacturers utilizing the symbols would be required to provide the date code information to any person upon request.

Public Comment

Chrysler Corporation (Chrysler) submitted the only comment in response to the NPRM. Chrysler supported the proposed amendment because it would allow manufacturers of wheel rims greater flexibility in meeting the requirements of the standard. Chrysler believed, however, that manufacturers should not be required to notify NHTSA in advance of their use of symbols, stating that doing so would be a burden to such manufacturers.

Agency Decision

After considering the single comment on the NPRM, NHTSA has decided to adopt the amendments proposed in the NPRM as proposed. With respect to the notification requirement, the agency appreciates that it may cause a slight administrative burden on manufacturers. NHTSA believes, however, that the notification requirement is the simplest and most effective way to ensure that the agency and members of the public are able to understand and distinguish between the potential plethora of symbols that may be used. Similarly, NHTSA must be able to readily ascertain the date of manufacture of rims to identify production runs in the event of defects or noncompliances. Thus, any burden on manufacturers in preparing a one-time letter, in no prescribed format, notifying NHTSA of the symbols they intend to use on their rims should be negligible. By contrast, this information should be of considerable value to NHTSA and the public.

Section 103(c) of the National Traffic and Motor Vehicle Safety Act (Safety Act), 15 U.S.C. at 1392(c), requires that each order shall take effect no sooner than 180 days from the date the order is issued unless "good cause" is shown that an earlier effective date is in the public interest. Since the amendments effected by this final rule merely provide wheel rim manufacturers an option, and thus greater flexibility, in meeting the requirements of FMVSS No. 120, NHTSA believes that the public interest would be served by not delaying the introduction of this alternative method of wheel rim labeling. Accordingly, the agency has determined that there is good cause to establish an effective date 30 days after publication of this final rule.

Rulemaking Analyses and Notices

Executive Order 12866 and DOT Regulatory Policies and Procedures

This final rule was not reviewed under E.O. 12866. NHTSA has considered the impact of this rulemaking action under DOT's regulatory policies and procedures and has determined it to be not "significant." As discussed above, this rulemaking action simply provides wheel rim manufacturers with the option of displaying the date of manufacture of their rims by means of a symbol rather than numerically, should they wish to do so. The additional costs to manufacturers will be minuscule, if any, since they are already required to display the manufacturing dates of their wheel rims in any case. Accordingly, a full regulatory evaluation is not required.

Regulatory Flexibility Act

NHTSA has considered the effects of this regulatory action under the Regulatory Flexibility Act. I hereby certify that the amendments promulgated by this final rule will not have a significant economic impact on a substantial number of small entities. Accordingly, the agency has not prepared a regulatory flexibility analysis.

The agency believes that few, if any, wheel rim manufacturers qualify as small businesses. Further, since no additional costs or price changes should be associated with this action, small businesses, small organizations and small government entities will not be affected in their respective capacities as purchasers of new vehicles and/or new wheels and rims.

National Environmental Policy Act

NHTSA has analyzed this rulemaking action for purposes of the National Environmental Policy Act and has determined that implementation of this action will have no significant impact on the quality of the human environment.

Executive Order 12612 (Federalism)

NHTSA has analyzed this rulemaking action in accordance with the principles and criteria contained in Executive Order 12612 and has determined that this proposal does not have sufficient federalism implications to warrant preparation of a Federalism Assessment.

Civil Justice Reform

This rule does not have any retroactive effect. Under section 103(d) of the Safety Act, 15 U.S.C. 1392(d), whenever a Federal motor vehicle safety standard is in effect, a state may not adopt or maintain a safety standard applicable to the same aspect of performance which is not identical to the Federal standard. Section 105 of the Safety Act, 15 U.S.C. 1394, sets forth a procedure for judicial review of final rules establishing, amending or revoking Federal motor vehicle safety standards. That section does not require submission of a petition for reconsideration or other administrative proceedings before parties may file suit in court.

Paperwork Reduction Act

The provisions in this final rule requiring manufacturers to notify NHTSA in writing of the symbols they propose to use to mark the date of manufacture of the rims they produce are considered to be information collection requirements as defined by the Office of Management and Budget (OMB) in 5 CFR part 1320. The information collection requirements for 49 CFR 571.120 have been submitted to and approved by OMB pursuant to the provisions of the Paperwork Reduction Act (44 U.S.C. 3501, *et seq.*). This collection of information has been assigned OMB control number 2127–0503, Consolidated Labeling Requirements for Motor Vehicle Tires and Rims, and has been approved for use through December 31, 1995.

List of Subjects in 49 CFR Part 571

Imports, Motor vehicle safety, Motor vehicles, Rubber and rubber products, and Tires.

In consideration of the foregoing, 49 CFR part 571 is amended as follows:

PART 571—FEDERAL MOTOR VEHICLE SAFETY STANDARDS

1. The authority citation for Part 571 will continue to read as follows:

Authority: 15 U.S.C. 1392; 1401; 1403; 1407; delegation of authority at 49 CFR 1.50.

2. Section 571.120 is amended by revising S5.2(e) to read as follows:

§ 571.120 Standard No. 120, Tire selection and rims for motor vehicles other than passenger cars.

* * * * *

S5.2 * * *

(e) The month, day and year or the month and year of manufacture, expressed either numerically or by use of a symbol, at the option of the manufacturer. For example:

"September 4, 1976" may be expressed numerically as:
90476, 904, or 76
76 904

"September 1976" may be expressed as:
976, 9, or 76
76 9

(1) Any manufacturer that elects to express the date of manufacture by means of a symbol shall notify NHTSA in writing, in duplicate, of the full names and addresses of all manufacturers and brand name owners utilizing that symbol and the trademark owner of that symbol, if any. The notification shall describe in narrative form and in detail how the month, day, and year or the month and year are depicted by the symbol. Such description shall include an actual size graphic depiction of the symbol, showing and/or explaining the interrelationship of the component parts of the symbol as they will appear on the rim or single piece wheel disc, including dimensional specifications, and where the symbol will be located on the rim or single piece wheel disc. The notification shall be received by NHTSA at least 60 calendar days prior to first use of the symbol. The notification shall be mailed to the Office of Vehicle Safety Standards, Crash Avoidance Division, National Highway Traffic Safety Administration, 400 Seventh Street, SW., Washington, DC 20590. All information provided to this agency under this paragraph will be placed in the public docket.

(2) Each manufacturer of wheels shall provide an explanation of its date of manufacture symbol to any person upon request.

* * * * *

Issued on: May 11, 1994.

Christopher A. Hart,

Deputy Administrator.

[FR Doc. 94–11917 Filed 5–16–94; 8:45 am]

BILLING CODE 4910–59–P

Proposed Rules

Federal Register
Vol. 59, No. 94
Tuesday, May 17, 1994

This section of the FEDERAL REGISTER contains notices to the public of the proposed issuance of rules and regulations. The purpose of these notices is to give interested persons an opportunity to participate in the rule making prior to the adoption of the final rules.

DEPARTMENT OF TRANSPORTATION

Federal Highway Administration

23 CFR Part 645

[FHWA Docket No. 94-8]

RIN 2125-AD31

Utilities

AGENCY: Federal Highway Administration (FHWA), DOT.

ACTION: Notice of proposed rulemaking.

SUMMARY: The FHWA proposes to amend its regulation on utilities. The proposed amendments would raise the upper limit for FHWA forgoing preaward review and/or approval of consultant contracts for preliminary engineering from $10,000 to $25,000 and would increase the ceiling for lump sum agreements from $25,000 to $100,000. They would clarify the methodology to be used to compute indirect or overhead rates and would require utilities to submit final billings within 180 calendar days following completion of the work. They would bring the definition of "clear zone" into conformance with the American Association of State Highway and Transportation Officials (AASHTO) "Roadside Design Guide." They would incorporate an amendment conforming the utilities regulations to the Intermodal Surface Transportation Efficiency Act of 1991 (ISTEA). The FHWA proposes these changes to conform the utilities regulations to more recent laws, regulations, or guidance and to provide the State highway agencies clarification and more flexibility in implementing them.

DATES: Written comments are due on or before July 18, 1994.

ADDRESSES: All written, signed comments should refer to the docket number that appears at the top of this document and should be submitted to Federal Highway Administration, Office of Chief Counsel, Room 4232, HCC-10, 400 Seventh Street, SW., Washington, D.C. 20590. All comments and suggestions received will be available for examination at the above address between 8:30 a.m. and 3:30 p.m., e.t., Monday through Friday, except Federal legal holidays. Those desiring notification of receipt of comments must include a self-addressed, stamped postcard.

FOR FURTHER INFORMATION CONTACT: Jerry L. Poston, Office of Engineering, 202-366-0450, or Wilbert Baccus, Office of the Chief Counsel, 202-366-0780, FHWA, 400 Seventh Street, SW., Washington, DC 20590.

SUPPLEMENTARY INFORMATION:

Background

Present FHWA regulations regarding utility relocation and accommodation matters have evolved from basic principles established decades ago, with many of the policies remaining unchanged. The present regulations are found in title 23, Code of Federal Regulations, part 645 (23 CFR part 645). Subpart A of this part pertains to utility relocations, adjustments, and reimbursement. Subpart B pertains to the accommodation of utilities. Part 645 was revised on May 15, 1985, when a final rule was published in the **Federal Register** at 50 FR 20344. Two significant changes have occurred since then, on February 2 and July 1, 1988, when amendments to the regulation were published in the **Federal Register** at 53 FR 2829 and 53 FR 24932. The February 2 amendment provided that each State must decide, as part of its utility relocation plan, whether to allow longitudinal utility installations within the access control limits of freeways and if allowed under what circumstances. The July 1 amendment clarified that costs incurred by highway agencies in implementing projects solely for safety corrective measures to reduce the hazards of utilities to highway users are eligible for Federal-aid participation. The FHWA proposes to amend these regulations in the following manner and for the reasons indicated below.

In § 645.109, paragraph (b) would be amended to increase the ceiling from $10,000 to $25,000 for FHWA approval of consultant contracts for preliminary engineering and related work. This would allow the FHWA to forgo pre-award review and/or approval of proposed consultant contracts which are not expected to exceed $25,000. The proposed amendment would increase the number of consultant contracts that could be advanced without prior FHWA approval and would conform § 645.109 to 23 CFR part 172, Administration of Engineering and Design Related Service Contracts, as revised on April 30, 1991.

In § 645.113, paragraph (f) would be amended to increase the ceiling from $25,000 to $100,000 for using the lump sum payment arrangement for reimbursement for utility adjustments on Federal-aid and direct Federal highway projects. The proposed amendment would provide the States greater flexibility in utilizing the lump sum payment arrangement. The purpose of allowing lump sum agreements in lieu of agreements based on an accounting of actual costs is to reduce the administrative burden associated with utility relocation projects. Under the lump sum process, cost accounting is easier, project billings are simplified, and a final audit of detailed cost records is not required. Final project costs are typically quite close to the costs estimated for small, routine projects. The FHWA believes that the small degree of accuracy that might be realized if more detailed cost accounting methods were followed does not justify the extra cost involved in carrying out detailed audits. This revision would increase the number of utility relocations potentially eligible for lump sum payment, would anticipate future needs, and would respond, in part, to the fact that since the $25,000 limit was established in 1983, inflation has reduced the number and limited the scope of projects eligible for lump sum payments.

In § 645.117, paragraph (d)(1) would be amended to clarify the methodology to be used for computing indirect overhead rates. The definition of indirect costs, and what may or may not be included, is set forth in 48 CFR part 31, Contract Cost Principles and Procedures. Part 31 is referenced in 49 CFR part 18, the common rule for State and local government program application to "for-profit" organizations. However, to avoid any misunderstandings and to assure consistency with the common rule, a reference to 48 CFR 31 will be placed in title 23. Section 645.117 would be further amended by revising paragraph (i)(2) to require utilities to submit final billings within 180 calendar days following completion of the work.

otherwise previous payments to utilities may be considered final and projects may be closed out. This change would assist highway agencies in their efforts to timely obtain final billings from the utilities. Some utility bills are received years after the work is completed, thus delaying audit activity and project closure. Billings received from utilities after 180 calendar days following completion of work could be paid at the discretion of the highway agency.

Section 645.207 would be amended to change the term "clear recovery area" to "clear zone" and to revise the definition of clear zone. In § 645.209, paragraph (b) would be amended to change the term "clear recovery area" to "clear zone." These changes would provide consistency with AASHTO's "Roadside Design Guide," [1] a 1989 document which should be used as a guide for establishing clear zones for various types of highways and operating conditions. The term "clear recovery area" originated in 1985 and, though worded somewhat differently, meant essentially the same as the term "clear zone." These terms were often used interchangeably. The "Roadside Design Guide," however, uses the term "clear zone" exclusively. Hence, to avoid confusion and to comply with the predominant guidance document, the term "clear zone" is proposed to be incorporated into the utility regulations.

In § 645.215, paragraph (a) would be amended to change the term "Federal-aid system" to "Federal-aid highway." This revision is in accordance with a conforming amendment in section 1016(f)(1)(B) of the Intermodal Surface Transportation Efficiency Act of 1991 (ISTEA) which changed the term "Federal-aid system" in 23 U.S.C. 109(l) to "Federal-aid highway."

Rulemaking Analyses and Notices

All comments received before the close of business on the comment closing date indicated above will be considered and will be available for examination in the docket at the above address. Comments received after the comment closing date will be filed in the docket and will be considered to the extent practicable, but the FHWA may issue a final rule at any time after the close of the comment period. In addition to late comments, the FHWA will also continue to file relevant information in the docket as it becomes available after the comment closing date, and interested persons should continue to examine the docket for new material.

Executive Order 12866 (Regulatory Planning and Review) and DOT Regulatory Policies and Procedures

The FHWA has determined that this action is not a significant regulatory action within the meaning of Executive Order 12866 or significant within the meaning of Department of Transportation regulatory policies and procedures. The proposed amendments would simply make minor changes to update the utilities regulations to conform to recent laws, regulations, or guidance and to clarify existing policies. It is anticipated that the economic impact of this rulemaking will be minimal because the proposed amendments would only clarify or simplify procedures presently being used by State highway agencies and utilities. Therefore, a full regulatory evaluation is not required.

Regulatory Flexibility Act

In compliance with the Regulatory Flexibility Act (5 U.S.C. 601–612), the FHWA has evaluated the effects of this rule on small entities. Based on the evaluation, the FHWA certifies that this action will not have a significant economic impact on a substantial number of small entities. This is because the proposed amendments would only clarify or simplify procedures used by State highway agencies and utilities in accordance with existing laws, regulations, or guidance.

Executive Order 12612 (Federalism Assessment)

This action has been analyzed in accordance with the principles and criteria contained in Executive Order 12612, and it has been determined that this action does not have sufficient federalism implications to warrant the preparation of a federalism assessment.

Executive Order 12372 (Intergovernmental Review)

Catalog of Federal Domestic Assistance Program Number 20.205, Highway Planning and Construction. The regulations implementing Executive Order 12372 regarding intergovernmental consultation on Federal programs and activities do not apply to this program.

Paperwork Reduction Act

This action does not contain a collection of information requirement for purposes of the Paperwork Reduction Act of 1980, 44 U.S.C. 3501–3520.

National Environmental Policy Act

The agency has analyzed this action for the purpose of the National Environmental Policy Act of 1969 (42 U.S.C. 4321 *et. seq.*) and has determined that this action would not have any effect on the quality of the environment.

Regulation Identification Number

A regulation identification number (RIN) is assigned to each regulatory action listed in the Unified Agenda of Federal Regulations. The Regulatory Information Service Center publishes the Unified Agenda in April and October of each year. The RIN contained in the heading of this document can be used to cross reference this action with the Unified Agenda.

List of Subjects in 23 CFR Part 645

Grant Programs—transportation, Highways and roads, Utilities—relocations, adjustment, reimbursement.

Issued on: May 9, 1994.

Rodney E. Slater,

Federal Highway Administrator.

In consideration of the foregoing, the FHWA proposes to amend title 23, Code of Federal Regulations, part 645 as set forth below:

PART 645—UTILITIES

1. The authority citation for part 645 continues to read as follows:

Authority: 23 U.S.C. 101, 109, 111, 116, 123, and 315; 23 CFR 1.23 and 1.27; 49 CFR 1.48(b); and E.O. 11990, 42 FR 26961 (May 24, 1977).

§ 645.109 [Amended]

2. In § 645.109, paragraph (b) is amended by removing the figure "$10,000" wherever it appears and adding in its place the figure "$25,000".

§ 645.113 [Amended]

3. In § 645.113, paragraph (f) is amended by removing the figure "$25,000" wherever it appears and adding in its place the figure "$100,000".

4. In § 645.117, paragraphs (d)(1) and (i)(2) are revised to read as follows:

§ 645.117 Cost development and reimbursement.

* * * * *

(d) *Overhead and indirect construction costs.* (1) Overhead and indirect construction costs not charged directly to work order or construction accounts may be allocated to the relocation provided the allocation is made on an equitable basis. All costs included in the allocation shall be

[1] The "Roadside Design Guide" is incorporated by reference at 23 CFR 625.5(a)(3). It is available for purchase from the American Association of State Highway and Transportation Officials, suite 225, 444 North Capitol Street, NW., Washington, DC 20001. Also, it is available for inspection as provided in 49 CFR part 7, appendix D.

eligible for Federal reimbursement, reasonable, actually incurred by the utility, and consistent with the provisions of 48 CFR part 31.

* * * * *

(i) *Billings.* * * * (2) The utility shall provide one final and complete billing of all costs incurred, or of the agreed-to lump-sum, within 180 calendar days following completion of the work, otherwise previous payments to the utility may be considered final. The final billing to the FHWA shall include a certification by the SHA that the work is complete, acceptable, and in accordance with the terms of the agreement.

* * * * *

§ 645.207 [Amended]

5. Section 645.207 is amended by removing the paragraph designations from all definitions, by placing the definitions in alphabetical order, by removing the definition of "clear recovery area," by revising the first sentence in the definition for "clear roadside policy" and by adding the definition "clear zone" to read as follows:

§ 645.207 Definitions.

* * * * *

Clear roadside policy—that policy employed by a highway agency to provide a clear zone in order to increase safety, improve traffic operations, and enhance the aesthetic quality of highways by designing, constructing and maintaining highway roadsides as wide, flat, and rounded as practical and as free as practical from natural or manufactured hazards such as trees, drainage structures, nonyielding sign supports, highway lighting supports, and utility poles and other ground-mounted structures. * * *

Clear zone—the total roadside border area starting at the edge of the traveled way, available for safe use by errant vehicles. This area may consist of a shoulder, a recoverable slope, a non-recoverable slope, and/or the area at the toe of a non-recoverable slope available for safe use by an errant vehicle. The desired width is dependent upon the traffic volumes and speeds, and on the roadside geometry. The American Association of State Highway and Transportation Officials (AASHTO) "Roadside Design Guide," 1989, should be used as a guide for establishing clear zones for various types of highways and operating conditions. It is available for inspection from the FHWA Washington Headquarters and all FHWA Division and Regional Offices as prescribed in 49 CFR part 7, appendix D. Copies of current AASHTO publications are available for purchase from the American Association of State Highway and Transportation Officials, suite 225, 444 North Capitol Street, NW., Washington, DC 20001.

* * * * *

§ 645.209 [Amended]

6. In § 645.209, paragraph (b) is amended by removing the words "clear recovery" in the second sentence and removing the words "clear recovery area" in the third sentence and adding in their place the words "clear zone".

§ 645.215 [Amended]

7. In § 645.215, paragraph (a), the fifth sentence is amended by removing the words "of the Federal-aid highway system" and adding in their place the words "of Federal-aid highways".

[FR Doc. 94–11845 Filed 5–16–94; 8:45 am]
BILLING CODE 4910–22–P

DEPARTMENT OF THE TREASURY

Internal Revenue Service

26 CFR Part 1

[PS–27–94]

RIN 1545–AS70

Subchapter K Anti-Abuse Rule

AGENCY: Internal Revenue Service (IRS), Treasury.

ACTION: Notice of proposed rulemaking and notice of public hearing.

SUMMARY: This document contains a proposed regulation providing an anti-abuse rule under subchapter K of the Internal Revenue Code of 1986 (Code). The rule authorizes the Commissioner of Internal Revenue, in certain circumstances, to recast a transaction involving the use of a partnership to reflect the underlying economic arrangement under subchapter K or to prevent the use of a partnership to circumvent the intended purpose of a provision of the Code. The proposed regulation affects partnerships and their partners and is necessary to provide guidance needed to comply with the applicable tax law.

DATES: Written comments must be received by July 1, 1994. Outlines of topics to be discussed at the public hearing scheduled for Monday, July 25, 1994, at 10 a.m. must be received by Tuesday, July 5, 1994.

ADDRESSES: Send submissions to: CC:DOM:CORP:T:R (PS–27–94), room 5228, Internal Revenue Service, POB 7604, Ben Franklin Station, Washington, DC 20044. In the alternative, submissions may be hand delivered between the hours of 8 a.m. and 5 p.m. to: CC:DOM:CORP:T:R (PS–27–94), Courier's Desk, Internal Revenue Service, 1111 Constitution Avenue, NW., Washington, DC. The public hearing will be held in the Auditorium, Internal Revenue Building, 1111 Constitution Avenue, NW., Washington, DC.

FOR FURTHER INFORMATION CONTACT: Concerning the regulations, Mary A. Berman or D. Lindsay Russell, (202) 622–3050; concerning submissions and the hearing, Michael Slaughter, (202) 622–7190 (not toll-free numbers).

SUPPLEMENTARY INFORMATION:

Background

This document proposes to add § 1.701–2 to the Income Tax Regulations (26 CFR part 1) to provide for an anti-abuse rule under subchapter K of the Code. This rule is proposed to apply for all purposes of the Code (e.g., income, estate, gift, generation-skipping, and excise tax).

Subchapter K was enacted to permit businesses organized for joint profit to be conducted with "simplicity, flexibility, and equity as between the partners." S. Rep. No. 1622, 83d Cong., 2d Sess. 89 (1954); H.R. Rep. No. 1337, 83d Cong., 2d Sess. 65 (1954). It was not intended, however, that the provisions of subchapter K be used for tax avoidance purposes. For example, in enacting subchapter K, Congress indicated that aggregate, rather than entity, concepts should be applied if such concepts are more appropriate in applying other provisions of the Code. H.R. Conf. Rep. No. 2543, 83d Cong., 2d Sess. 59 (1954). Similarly, in later amending the rules relating to special allocations, Congress sought to "prevent the use of special allocations for tax avoidance purposes, while allowing their use for bona fide business purposes." S. Rep. No. 938, 94th Cong., 2d Sess. 100 (1976). Thus, the intent of the partnership provisions in subchapter K is to permit taxpayers to conduct business for joint economic profit through a flexible arrangement that accurately reflects the partners' economic agreement without incurring an entity-level tax. These provisions are not intended, however, to permit taxpayers either to structure transactions using partnerships to achieve tax results that are inconsistent with the underlying economic arrangements of the parties or the substance of the transactions, or to use the existence of the partnerships to avoid the purposes of other provisions of the Code.

The provisions of subchapter K should be applied in a manner consistent with their intent. Treasury and the IRS are aware, however, of an increasing number of transactions that attempt to use the partnership form in a manner inconsistent with that intent. For example, some transactions attempt to use a partnership to circumvent other provisions of the Code or purport to create tax advantages inconsistent with the substance of the transaction. See, e.g., Notice 94–48, 1994–19 I.R.B. 10. Other transactions appear to rely on the literal language of rules in the subchapter K regulations (or elsewhere) to produce tax results that are inconsistent with the intended purpose of those rules.

The proposed regulation clarifies the authority of the Commissioner of Internal Revenue to recast those transactions that exploit and misuse the provisions of subchapter K in an attempt to avoid tax. In promulgating this regulation, it is intended that all taxpayers, including partners and partnerships, will remain subject to other statutory and regulatory rules and judicial doctrines. See, e.g., *Merryman v. Commissioner*, 873 F.2d 879 (5th Cir. 1989) (sham transaction).

The proposed regulation is not intended to interfere with bona fide joint business arrangements involving partnerships. For example, a partnership's use of nonrecourse financing and special allocations generally is not inconsistent with the intent of subchapter K.

The proposed regulation also is not intended to override specific regulatory de minimis rules, such as those contained in § 1.704–3(e)(1), § 1.514(c)-2(k) (2) and (3), and regulations proposed under sections 337(d) and 1374 (excepting certain small partnership interests or holdings from the scope of those provisions). The regulation also is not intended to override rules provided elsewhere that prescribe special treatment for partnerships and their partners. See, e.g., § 1.904–5(h), § 1.1362–2(c)(4)(ii)(B)(*4*)(*i*), and proposed regulations under section 1374 pertaining to recognized built-in gain and loss limitations.

The proposed regulation primarily will affect a relatively small number of abusive large partnership transactions and reflects Treasury's and the IRS's commitment to preventing those abuses from undermining the intent of subchapter K. Nevertheless, Treasury and the IRS initially have determined that a specific safe harbor or de minimis rule is unnecessary and may in fact be inappropriate in light of the purpose of this regulation. Treasury and the IRS invite comments on this issue.

Explanation of Provisions

Under the proposed regulation, if a partnership is formed or availed of in connection with a transaction or series of related transactions (individually or collectively, the transaction) with a principal purpose of substantially reducing the present value of the partners' aggregate federal tax liability in a manner inconsistent with the intent of subchapter K, the Commissioner can disregard the form of the transaction. In such a case, even if the partnership and the partners comply with the literal language of one or more provisions of the Code or the regulations thereunder, the Commissioner can recast the transaction for federal tax purposes, as appropriate. For example, the Commissioner can determine that (1) the purported partnership should be disregarded in whole or in part in determining the tax effects of the transaction, (2) one or more of the purported partners of the partnership should not be treated as a partner, (3) the partnership and its partners should be respected but the partners should be treated as owning their respective shares of partnership assets directly (applying the aggregate concept of partnership taxation), (4) the methods of accounting used by the partnership or a partner should be revised to reflect clearly the partnership's or the partner's income, (5) the allocations of the partnership's items of income, gain, loss, deduction, or credit should be disregarded and reallocated, or (6) the intended tax treatment should otherwise be precluded.

The proposed regulation provides that the purposes for structuring a transaction will be determined based on all of the facts and circumstances. A reduction in the present value of the partners' aggregate federal tax liability through the use of a partnership does not, by itself, establish inconsistency with the intent of subchapter K.

The regulation is proposed to be effective for all transactions relating to a partnership occurring on and after May 12, 1994. The Commissioner can continue to rely upon applicable principles and authorities to challenge abusive transactions occurring before and after the effective date of the regulation. This regulation does not limit the applicability of those principles and authorities.

Special Analyses

It has been determined that this notice of proposed rulemaking is not a significant regulatory action as defined in EO 12866. Therefore, a regulatory assessment is not required. It has also been determined that section 553(b) of the Administrative Procedure Act (5 U.S.C. chapter 5) and the Regulatory Flexibility Act (5 U.S.C. chapter 6) do not apply to this regulation, and, therefore, a Regulatory Flexibility Analysis is not required. Pursuant to section 7805(f) of the Internal Revenue Code, this notice of proposed rulemaking will be submitted to the Chief Counsel for Advocacy of the Small Business Administration for comment on its impact on small business.

Comments and Public Hearing

Before this proposed regulation is adopted as a final regulation, consideration will be given to any written comments (a signed original and eight (8) copies) that are submitted timely to the IRS. All comments will be available for public inspection and copying.

A public hearing has been scheduled for July 25, 1994, at 10 a.m. in the Internal Revenue Auditorium, Seventh Floor, 7400 Corridor, Internal Revenue Building, 1111 Constitution Avenue, NW., Washington, DC. Because of access restrictions, visitors will not be admitted beyond the building lobby until 15 minutes prior to the hearing.

The rules of 26 CFR 601.601(a)(3) apply to the hearing.

Persons who wish to present oral comments at the hearing must submit written comments by July 1, 1994, and submit an outline of the topics to be discussed and the time to be devoted to each topic by July 5, 1994.

A period of 10 minutes will be allotted to each person for making comments.

An agenda showing the scheduling of the speakers will be prepared after the deadline for receiving outlines has passed. Copies of the agenda will be available free of charge at the hearing.

List of Subjects in 26 CFR Part 1

Income taxes, Reporting and recordkeeping requirements.

Proposed Amendments to the Regulations

Accordingly, 26 CFR part 1 is proposed to be amended as follows:

PART 1—INCOME TAXES

Paragraph 1. The authority citation for part 1 continues to read in part as follows:

Authority: 26 U.S.C. 7805 * * * Section 1.701–2 also issued under 26 U.S.C. 701 * * *

Par. 2. Section 1.701–2 is added to read as follows:

§ 1.701–2 Anti-Abuse rule.

(a) *Intent of subchapter K.* The intent of the partnership provisions in subchapter K is to permit taxpayers to conduct business for joint economic profit through a flexible arrangement that accurately reflects the partners' economic agreement without incurring an entity-level tax. These provisions are not intended, however, to permit taxpayers either to structure transactions using partnerships to achieve tax results that are inconsistent with the underlying economic arrangements of the parties or the substance of the transactions, or to use the existence of the partnerships to avoid the purposes of other provisions of the Internal Revenue Code.

(b) *Application of subchapter K rules.* The provisions of subchapter K and the regulations thereunder must be applied in a manner consistent with their intent as set forth in paragraph (a) of this section. Accordingly, if a partnership is formed or availed of in connection with a transaction or series of related transactions (individually or collectively, the transaction) with a principal purpose of substantially reducing the present value of the partners' aggregate federal tax liability in a manner that is inconsistent with the intent of subchapter K, the Commissioner can disregard the form of the transaction. In such a case, even if the taxpayer complies with the literal language of one or more of the provisions of the Internal Revenue Code or the regulations thereunder, the Commissioner can recast the transaction for federal tax purposes as appropriate. For example, the Commissioner can determine that—

(1) The purported partnership should be disregarded in whole or in part in determining the tax effects of the transaction;

(2) One or more of the purported partners should not be treated as a partner;

(3) The partnership and its partners should be respected but the partners should be treated as owning their respective shares of partnership assets directly (applying the aggregate concept of partnership taxation);

(4) The methods of accounting used by the partnership or a partner should be adjusted to reflect clearly the partnership's or the partner's income;

(5) The allocations of the partnership's items of income, gain, loss, deduction, or credit should be disregarded and reallocated; or

(6) The intended tax treatment should otherwise be precluded.

(c) *Facts and circumstances test.* The purposes for structuring a transaction involving a partnership will be determined based on all of the facts and circumstances. A reduction in the present value of the partners' aggregate federal tax liability through the use of a partnership does not, by itself, establish inconsistency with the intent of subchapter K.

(d) *Application of judicial principles and authorities.* The Commissioner can continue to assert and to rely upon applicable judicial principles and authorities (for example, the substance over form, step transaction, and sham transaction doctrines) to challenge abusive transactions. This regulation does not limit the applicability of those principles and authorities.

(e) *Examples.* The following examples illustrate the principles of this section:

Example 1. Use of partnership form consistent with the intent of subchapter K. A and B form limited partnership PRS. A is a corporate general partner with a 1% partnership interest. B, the limited partner, has a 99% interest. A and B choose partnership form in order to conduct a business, achieve flow-through tax treatment, and provide B with limited liability. Assume that PRS is properly classified as a partnership under §§ 301.7701–2 and 301.7701–3. Even though A and B chose to conduct their pooled business in partnership form in order to avoid an entity-level tax on any income generated by the business, because section 701 contemplates one level of tax, PRS has not been formed or availed of with a purpose inconsistent with the intent of subchapter K. Absent other facts, the Commissioner will not invoke paragraph (b) of this section to recast the transaction.

Example 2. Use of partnership form consistent with the intent of subchapter K. C, D, and E form partnership PRS for the purpose of owning and operating a qualified low-income building that qualifies for the low-income housing credit provided by section 42. The partnership agreement provides for special allocations of income and deductions, except as otherwise required by its qualified income offset and minimum gain chargeback provisions. The project is financed with nonrecourse indebtedness and the indebtedness is allocated to the partners under the rules of §§ 1.704–2 and 1.752–3, thereby (among other things) increasing the basis of their respective partnership interests. The basis increase created by, and resulting deductions attributable to, the nonrecourse indebtedness enables the investors to deduct their distributive share of losses from the partnership (subject to all other applicable limitations under the Internal Revenue Code) against their nonpartnership income. The low-income housing credit is a statutory benefit not derived from the use of the partnership. Similarly, basis attributable to nonrecourse indebtedness can be obtained without the use of a partnership. The purpose of using the partnership is to facilitate the ownership and the operation of the property, to enable multiple investors to realize the benefits of the credit, and to finance the venture using nonrecourse indebtedness. Under these facts, PRS has not been formed or availed of with a purpose inconsistent with the intent of subchapter K even though the use of the partnership form enabled the partners to obtain basis in their respective partnership interests for borrowing at the partnership level for which neither the partnership nor any of the partners had personal liability and enabled multiple investors to obtain the credit. Absent other facts, the Commissioner will not invoke paragraph (b) of this section to recast the transaction.

Example 3. Partnership allocation inconsistent with the intent of subchapter K. F, G, and H form partnership PRS by contributing cash to conduct a business. PRS's allocations generally comply with all applicable regulations, including the alternate economic effect test under § 1.704–1(b)(2)(ii)(*d*). In year 2, PRS recognizes taxable income with no corresponding increase in PRS's net worth (phantom income). F, G, and H attempt to achieve significant tax reduction by combining, over a period of time, partnership allocations of the income with a restatement of their capital accounts to fair market value pursuant to § 1.704–1(b)(2)(iv)(*f*). The intended result is that the partner who receives the income allocation does not receive the economic benefits associated with that allocation. The parties, in order to implement this plan, amend the partnership agreement to reflect the special allocation of the phantom income and, some time later, restate their respective book capital accounts to fair market value. F, G, and H rely on a regulatory provision whose literal language appears to permit the intended tax result. If the intended allocation were upheld, F, G, and H would, as a group, substantially reduce the present value of their aggregate federal tax liability. Under these facts, the special allocation of the phantom income and the restatement of capital accounts are inconsistent with the intent of subchapter K. The Commissioner, in addition to challenging the transaction under § 1.704–1(b), can recast the transaction as appropriate under paragraph (b) of this section, even if it is determined that PRS complied with the literal language of the regulations under § 1.704–1(b).

Example 4. Absence of § 754 election consistent with the intent of subchapter K. I, J, and K are equal partners in general partnership PRS that operates a business. The partnership has not made an election under section 754, relating to the optional adjustment to the basis of partnership property. At a time when PRS's assets have declined in value, K sells K's partnership interest to L, an unrelated third party, and recognizes a loss. PRS subsequently sells one of its assets at a loss. L has sufficient basis in its partnership interest to deduct L's distributive share of the loss. Because PRS has no section 754 election in effect, K and L have each effectively recognized the same loss (although L will ultimately recognize corresponding gain (or reduced loss) when L disposes of L's partnership interest), thereby reducing the present value of the partners' aggregate federal tax liability. The failure to make the election under section 754 in some situations allows temporary duplication of

gain or loss. That duplication is generally not, by itself, inconsistent with the intent of subchapter K. Absent other facts, the Commissioner will not invoke paragraph (b) of this section to recast the transaction.

(f) *Effective date.* Paragraphs (a), (b), (c), and (e) of this section are effective for all transactions relating to a partnership occurring on and after May 12, 1994.

Margaret Milner Richardson,

Commissioner of Internal Revenue.

[FR Doc. 94–11909 Filed 5–12–94; 10:25 am]

BILLING CODE 4830–01–U

---

26 CFR Part 1

[INTL–0006–90]

RIN 1545–AN87

Limitation On Use Of Deconsolidation To Avoid Foreign Tax Credit Limitations

AGENCY: Internal Revenue Service (IRS), Treasury.

ACTION: Notice of proposed rulemaking.

SUMMARY: This document contains proposed Income Tax Regulations relating to certain limitations on the amount of the foreign tax credit. This action is necessary because of changes to the applicable tax law made by the Revenue Reconciliation Act of 1989. These regulations would provide guidance needed to comply with these changes and would affect domestic corporations that are affiliates.

DATES: Comments and requests for a public hearing must be received by July 18, 1994.

ADDRESSES: Send submissions to: CC:DOM:CORP:T:R (INTL–0006–90), room 5228, Internal Revenue Service, POB Box 7604, Ben Franklin Station, Washington, DC 20044. In the alternative, submissions may be hand delivered between the hours of 8 a.m. and 5 p.m. to: CC:DOM:CORP:T:R (INTL–0006–90), Courier's Desk, Internal Revenue Service, 1111 Constitution Avenue NW., Washington, DC.

FOR FURTHER INFORMATION CONTACT: Kenneth Allison of the Office of Associate Chief Counsel (International), within the Office of Chief Counsel, Internal Revenue Service, 202–622–3860 (not a toll-free call).

SUPPLEMENTARY INFORMATION:

Background

This document contains proposed Income Tax Regulations (26 CFR part 1) under section 904 of the Internal Revenue Code of 1986 (Code). These amendments are proposed to conform the regulations to section 7402(a) of the Revenue Reconciliation Act of 1989 (103 Stat. 2106, 2357). These amendments are proposed to be issued under the authority contained in sections 7805 and 904(i) of the Code.

Explanation of Provisions

General

The Revenue Reconciliation Act of 1989 authorized the issuance of regulations requiring the resourcing of income of any member of an affiliated group of corporations (as expanded by the legislation) or the modification of the consolidated return regulations, to the extent that such resourcing or modification is necessary to prevent avoidance of the foreign tax credit limitations. Congress was particularly concerned about the interposition of entities other than "includible corporations" (as defined in section 1504(b)) into a chain of corporate ownership to deconsolidate domestic corporations in the chain and, as a result of the deconsolidation, avoid limitations on the foreign tax credit. Deconsolidation may be achieved by introducing a nonincludible entity (e.g., a foreign corporation) as the common parent of multiple chains of includible corporations or by interposition of a nonincludible entity deeper in a chain. The same concerns apply to groups of includible corporations that do not elect to file a consolidated return even though they are eligible to do so.

Calculation of the foreign tax credit limitation is made on a consolidated group basis for those groups of corporations that are eligible and elect to file consolidated returns. By removing a domestic corporation from an affiliated group, taxpayers can manipulate the foreign tax credit limitation. For example, by isolating foreign losses in the disaffiliated corporation, taxpayers can increase the amount of foreign source income in the group by using foreign losses in the disaffiliated corporation to reduce U.S. source income in that corporation rather than to reduce the foreign source income in the rest of the group. This increases the amount of the foreign tax credit limitation over what the limitation would be if all of the related corporations were members of the consolidated group.

Explanation of Proposed Regulations

Section 1.904(i)–1 treats certain domestic corporations that are either not eligible to be or, though eligible have not elected to be, members of the same consolidated group, as members of the same consolidated group solely for purposes of applying the foreign tax credit provisions of section 59(a), sections 901 through 908, and section 960. Section 1.904(i)–1 does not move income from one member of the extended consolidated group to another member. It only affects the source or foreign tax credit separate limitation character of the net income of members of the group.

Section 1.904(i)–1 does not prescribe a particular method for allocating net income to affiliates. Rather, it permits taxpayers to use any consistently applied reasonable method to allocate net income to each affiliate. We invite comments on whether more detailed guidance, which may well circumscribe the ability of taxpayers to take alternative reasonable approaches, would be preferable.

The provisions of section 904(i) apply to: (1) includible corporations that are members of the same affiliated group under section 1504(a) but that do not file consolidated returns; and (2) corporations that, because of the interposition of entities other than includible corporations (e.g., a foreign corporation in the chain or a common foreign parent), are not in the same affiliated group. If all includible corporations are eligible and have already elected to be members of the same consolidated group, then, as provided in § 1.904(i)–1(b)(1)(iii), the rules of section 904(i) do not apply.

These rules are necessary in order to prevent includible corporations from avoiding the foreign tax credit limitation rules, either by interposition of nonincludible corporations or by a failure to file a consolidated return when eligible to do so. However, the application of the regulations is not dependent upon whether the federal income tax consequences of its application favor, or are adverse to, the taxpayer.

Proposed Effective Date

These regulations are proposed to be effective for taxable years of affiliates beginning after December 31, 1993.

Special Analyses

It has been determined that this notice of proposed rulemaking is not a significant regulatory action as defined in EO 12866. Therefore, a regulatory assessment is not required. It has also been determined that section 553(b) of the Administrative Procedure Act (5 U.S.C. chapter 5) and the Regulatory Flexibility Act (5 U.S.C. chapter 6) do not apply to these regulations, and, therefore, a Regulatory Flexibility Analysis is not required. Pursuant to

section 7805(f) of the Internal Revenue Code, this notice of proposed rulemaking will be submitted to the Chief Counsel for Advocacy of the Small Business Administration for comment on its impact on small business.

Comments and Requests for a Public Hearing

Before these proposed regulations are adopted as final regulations, consideration will be given to any written comments (preferably a signed original and eight (8) copies) that are submitted timely to the IRS. All comments will be available for public inspection and copying. A public hearing may be scheduled if requested in writing by a person that timely submits written comments. If a public hearing is scheduled, notice of the date, time, and place for the hearing will be published in the **Federal Register**.

Drafting Information

The principal author of these proposed regulations is Kenneth D. Allison of the Office of Associate Chief Counsel (International), within the Office of Chief Counsel, Internal Revenue Service. However, other personnel from the IRS and Treasury Department participated in their development.

List of Subjects in 26 CFR Part 1

Income taxes, Reporting and recordkeeping requirements.

Proposed Amendments to the Regulations

Accordingly, 26 CFR part 1 is proposed to be amended as follows:

PART 1—INCOME TAXES

Paragraph 1. The authority citation for part 1 is amended by adding an entry in numerical order to read as follows:

Authority: 26 U.S.C. 7805 * * *

Section 1.904(i)–1 also issued under 26 U.S.C. 904(i). * * *

Par. 2. In § 1.904–0, the introductory text is revised and table of contents entries are added for § 1.904(i)-1 to read as follows:

§ 1.904–0 Outline of regulation provisions for section 904.

This section lists the paragraphs contained in the regulations that implement section 904.

* * * * *

§ 1.904(i)–1 Limitation on use of deconsolidation to avoid foreign tax credit limitations.

(a) General rule.
(b) Definitions and special rules.
(1) Affiliate.
(i) Generally.
(ii) Exception for newly acquired affiliates.
(iii) Exception for some consolidated groups.
(2) Includible corporation.
(c) Taxable years.
(d) Consistent treatment of foreign taxes paid.
(e) Effective date.

Par. 3. Section 1.904(i)–1 is added to read as follows:

§ 1.904(i)–1 Limitation on use of deconsolidation to avoid foreign tax credit limitations.

(a) *General rule.* If two or more includible corporations are affiliates, within the meaning of paragraph (b)(1) of this section, at any time during their taxable years, then, solely for purposes of applying the foreign tax credit provisions of section 59(a), sections 901 through 908, and section 960, each of those affiliates will be treated as if they were part of the same consolidated return group for that portion of the year during which those corporations were affiliates. Thus, each affiliate must compute its foreign source taxable income or loss in each separate category, as defined in § 1.904–5(a)(1). Those amounts are combined for all affiliates to determine one amount for the group of affiliates in each separate category. The rules of section 904(f) are then applied to the combined amounts in each separate category to determine the group's net taxable income or loss in each separate category. Any net taxable income so calculated for purposes of the foreign tax credit provisions must then be allocated pro rata among the affiliates under any consistently applied reasonable method. This allocation will only affect the source and foreign tax credit separate limitation character of the income of each affiliate, and will not otherwise affect an affiliate's total net income or loss. This section applies whether the federal income tax consequences of its application favor, or are adverse to, the taxpayer.

(b) *Definitions and special rules*—For purposes of this section only, the following terms will have the meanings specified.

(1) *Affiliate*—(i) *Generally.* Affiliates are includible corporations—

(A) That are members of the same affiliated group, as defined in section 1504(a); or

(B) That would be members of the same affiliated group, as defined in section 1504(a); but for

(*1*) The ownership of one or more includible corporations by entities that are not includible corporations; or

(*2*) The inapplicability of the constructive ownership rules of section 1563(e) for purposes of section 1504(a).

(ii) *Exception for newly acquired affiliates.* An includible corporation will not be considered an affiliate of another includible corporation during its taxable year beginning before the date on which the first includible corporation first becomes an affiliate with respect to that other includible corporation.

(iii) *Exception for some consolidated groups.* The provisions of paragraph (a) of this section shall not apply if the only affiliates under this definition are already members of the same consolidated group without operation of this section.

(2) *Includible corporation.* The term *includible corporation* has the same meaning it has in section 1504(b).

(c) *Taxable years.* If all of the affiliates use the same U.S. taxable year for determining gross income, then that year must be used for purposes of applying this section. If, however, the affiliates use more than one U.S. taxable year for determining gross income, then an appropriate taxable year must be used for applying this section. The determination whether a year is appropriate must take into account all of the relevant facts and circumstances, including the U.S. taxable years used by the affiliates for general U.S. income tax purposes. Those affiliates that do not use the year determined in the preceding sentence as their U.S. taxable year for general U.S. income tax purposes must, for purposes of this section, use their U.S. taxable year or years ending within the taxable year determined in the preceeding sentence. If, however, the stock of an affiliate is disposed of so that it ceases to be an affiliate, then the taxable year of that affiliate will be considered to end on the disposition date for purposes of this section.

(d) *Consistent treatment of foreign taxes paid.* All affiliates must consistently either elect under section 901(a) to claim a credit for foreign income taxes paid or accrued, or deemed paid or accrued, or to deduct foreign taxes paid or accrued under section 164. See also § 1.1502–4(a); § 1.905–1(a).

(e) *Effective date.* This section will be effective for taxable years of affiliates beginning after December 31, 1993.

Margaret Milner Richardson,

Commissioner of Internal Revenue.

[FR Doc. 94–11602 Filed 5–16–94; 8:45 am]

BILLING CODE 4830–01–U

ENVIRONMENTAL PROTECTION AGENCY

40 CFR Part 180

[PP 4E4349/P582; FRL–4865–5]

RIN No. 2070–AC18

Pesticide Tolerance for Amitraz

AGENCY: Environmental Protection Agency (EPA).

ACTION: Proposed rule.

SUMMARY: This document proposes to establish a time-limited tolerance for residues of the insecticide/miticide amitraz (N'-[2,4-dimethylphenyl]-*N*-[[(2,4-dimethylphenyl)-imino]methyl]-*N*-methylmethanimidamide) and its metabolites *N*-(2,4-dimethylphenyl)-*N*-methyl formamide and *N*-(2,4-dimethylphenyl)-*N*-methylmethanimidamide (both calculated as the parent) in or on dried hops at 75 ppm, with an expiration date of 2 years after the beginning date of a final rule. Nor-Am Chemical Co. submitted a petition to EPA to establish the maximum permissible levels of residues of the insecticide/miticide in or on the commodity.

DATES: Comments, identified by the document control number [PP 4E4349/P582], must be received on or before June 16, 1994.

ADDRESSES: Comments may be submitted to: Public Docket and Freedom of Information Section, Field Operations Division (7506C), Office of Pesticide Programs, 401 M St., SW., Washington, DC 20460. In person, bring comments to: Rm. 1128, CM #2, 1921 Jefferson Davis Hwy., Arlington, VA 22202.

Information submitted as a comment concerning this document may be claimed confidential by marking any part or all of that information "Confidential Business Information" (CBI). Information so marked will not be disclosed except in accordance with procedures set forth in 40 CFR part 2. A copy of the comment that does not contain CBI must be submitted for inclusion in the public record. Information not marked confidential may be disclosed publicly by EPA without prior notice. All written comments will be available for public inspection in Rm. 1128 at the address given above, from 8 a.m. to 4 p.m., Monday through Friday, excluding legal holidays.

FOR FURTHER INFORMATION CONTACT: By mail: Dennis H. Edwards, Jr., Product Manager (PM) 19, Registration Division (7505C), Environmental Protection Agency, 401 M St., SW., Washington, DC 20460. Office location and telephone number: Rm. 207, CM #2, 1921 Jefferson Davis Hwy., Arlington, VA 22202, (703)-305-6386.

SUPPLEMENTARY INFORMATION: EPA issued a notice, published in the Federal Register of December 13, 1991 (56 FR 65080), which announced that Nor-Am Chemical Co., Little Falls Centre One, 2711 Centerville Rd., Wilmington, DE, 19808, had submitted a food additive petition (FAP 2H5618) to EPA requesting that the Administrator, pursuant to sections 408(d) and 409 of the Federal Food, Drug, and Cosmetic Act (FFDCA), 21 U.S.C. 346a(d), 348, establish a tolerance for the insecticide/miticide amitraz (*N*'[2,4-dimethylphenyl]-*N*-[[(2,4-dimethylphenyl)imino]methyl]-*N*-methyl-methanimidamide) and its metabolites *N*-(2,4-dimethylphenyl)-*N*-methyl formamide and *N*-(2,4-dimethylphenyl)-*N*-methylmethanimidamide (both calculated as the parent compound) in or on imported dried hops at 75 ppm. There were no comments received in response to the initial notice of filing.

Prior to this proposal, EPA had not proposed to establish a tolerance for amitraz on hops because dried hops have been considered a processed food requiring a section 409 tolerance and EPA was concerned that a section 409 tolerance for amitraz might be prohibited by section 409's Delaney anti-cancer clause. Recently, EPA reclassified dried hops as a raw agricultural commodity. Tolerances for raw agricultural commodities are set under section 408 of the FFDCA, which contains no Delaney clause.

EPA has been considering for some time whether dried hops are properly classified as a processed food. The FFDCA defines a RAC as "food in its raw or natural state, including all fruits that are washed, colored, or otherwise treated in their unpeeled natural form prior to marketing," 21 U.S.C. 321 (r). Elsewhere the FFDCA lists canning, cooking, freezing, dehydration, and milling as examples of processing activities for RACs (21 U.S.C. 342(a)(2)).

Hops are a unique commodity, used almost exclusively as a flavoring agent for beer. Harvested in a fresh form (green hops), they are immediately dried in kilns. This on-farm drying is necessary to prevent spoilage and always occurs prior to the shipment of the dried hops to beer manufacturers. While the drying of hops is, in the most general sense, a form of dehydration, both EPA and FDA have traditionally treated many forms of dried or partially dried food as RACs, e.g., peanuts and grains. Both domestic and international hops growers have asserted that dried hops should be considered a RAC because the drying process takes place immediately upon harvest, before the hops leave the farm or enter commerce, i.e., "prior to marketing."

Congress indicated in its most recent appropriations bill for EPA that it believes that EPA's treatment of dried hops as a processed food was a misinterpretation of the statute. That bill, Public Law 103-124, which was signed by President Clinton on October 28, 1993, prohibits EPA from using funds for any regulatory activity under FFDCA or FIFRA resulting from the classification of hops as a processed food. In the Congressional report that accompanied the bill, the Appropriations Committee explained that this limitation on spending was directed at barring EPA from acting on what Congress believes is an erroneous interpretation of the term RAC as it applies to dried hops, S. Rep. 103-137, 103d Cong., 1st Sess. 121 (1993). In consideration of these factors, EPA revised its guidelines to change the classification of dried hops from a processed commodity to a RAC.

The data submitted in the petition and all other relevant material have been evaluated. The toxicology data considered in support of the tolerance include:

1. A 2-year rat feeding/carcinogenicity study which was negative for carcinogenic effects under the conditions of the study and which had a NOEL of 50 ppm (2.5 mg/kg/bwt) for noncarcinogenic effects.

2. A three-generation rat reproduction study with a NOEL of 15 ppm (1.5 mg/kg/bwt); rat and rabbit teratology studies which were negative at doses up to 12 mg/kg/bwt and 25 mg/kg/bwt, respectively.

3. A 2-year mouse carcinogenicity study which demonstrated an increase in the incidence of hepatocellular tumors in female mice.

4. A 2-year dog feeding study with a NOEL of 0.25 mg/kg/bwt which demonstrated increased blood glucose and slight hypothermia after dosing at the 1.0 mg/kg/bwt dose. The reference dose (RfD), based on the 2-year dog feeding study with a NOEL of 0.25 mg/kg/bwt and a 100-fold uncertainty factor, is calculated to be 0.0025 mg/kg of body weight/day.

The 2-year mouse carcinogenicity study which showed an increase in the incidence of hepatocellular tumors in female mice was referred to the Agency's Carcinogen Assessment Group (CAG) for evaluation. CAG (1986)

concluded that amitraz should be classified as a possible human carcinogen, Group C. This classification is based on the Agency's "Guidelines for Carcinogen Risk Assessment" published in the **Federal Register** of September 24, 1986 (51 FR 33992). In its evaluation, CAG considered the following information:

1. The positive carcinogenic effects were found in only one species, the mouse.

2. Tumors were discovered mostly in animals at the scheduled terminal sacrifice.

3. The rat was negative for carcinogenic effects at doses as high as 200 ppm.

4. There is no positive epidemiological carcinogenicity data for amitraz.

On February 12, 1986, the Federal Insecticide, Fungicide and Rodenticide Act (FIFRA) Scientific Advisory Panel (SAP) completed a review of the data base for the Group C classification of amitraz. The SAP concluded that the weight-of-the-evidence was inadequate to clearly categorize amitraz. Amitraz has also been determined to be negative in the gene mutation, host-mediated, and dominant-lethal test systems. Studies such as the Ames bacterial test, a mouse lymphoma assay, and an unscheduled DNA synthesis in human embryonic cells have been conducted with amitraz, also with negative results. For these reasons, the SAP disagreed with the Agency classification and recommended that amitraz be classified as a Group D carcinogen (not classifiable as to human carcinogenicity).

Despite the SAP's recommendation, the Agency continued to regulate amitraz as a Group C carcinogen, without quantification of the risk. In late 1990, however, the Agency decided to reexamine the weight-of-the-evidence regarding the carcinogenic potential of amitraz. The "C" classification was reaffirmed, but quantification of potential human cancer risk, using a low-dose extrapolation model (Q^*_1), was recommended. This decision was based on the fact that amitraz was associated with the induction of multisite benign and malignant tumors in different strains of male and female mice. Some of these tumors (hepatocellular tumors) are considered relatively uncommon in female $B_6C_3F_1$ mice.

The Agency prepared a dietary risk assessment for amitraz in support of the cotton tolerances recently established (58 FR 14314; Mar. 17, 1993). The resulting dietary risk was calculated to be 2.5 X 10^{-6} (for the cottonseed/eggs/poultry use, plus pears, cattle, swine and honey/beeswax). New assessments, using more accurate usage information for cotton, pears, swine, and the honey (beehive) use, have since lowered the overall risk to 1.7 X 10^{-6}. The addition of the use on hops will add 1.2 X 10^{-6} to this risk, assuming exposure over a lifetime of 70 years. However, as this is a 2-year tolerance, the actual risk is much lower.

The tolerance established would be for 2 years, with an expiration date of 2 years after the beginning date of a final rule. The Agency expects additional residue data to be submitted, as well as further information on usage and sales of amitraz overseas, which may enable EPA to refine and reevaluate the risk at the end of the 2-year period. At this time, no residue data has been submitted for the U.S., and there are no U.S. registrations for the use of amitraz on hops. The Agency will not consider any applications for registration of amitraz to be used on hops in the U.S., nor will EPA consider any special local needs registrations (FIFRA section 24c) for amitraz.

The anticipated residue contribution (ARC) for this chemical from published tolerances utilizes 1.4% of the RfD. The proposed tolerance will contribute 0.000025 mg/kg/bwt/day to the human diet utilizing an additional 1% of the RfD. This results in a total utilization of 2.4% of the RfD.

The OPP Reference Dose Committee (RfD) recently reviewed the toxicity data base for amitraz. In doing so, the Committee indicated that based on evidence of some developmental toxicity at relatively low dose levels in the rabbit developmental toxicity study, an acute dietary risk assessment was appropriate. A Margin of Exposure (MOE) for females aged 13 and above (the population subgroup of concern for developmental toxicity) was calculated by comparing the NOEL of 5.0 mg/kg bwt/day from the rabbit study to the calculated high-end exposure of 0.05 mg/kg bwt/day. The calculated MOE in this case is exactly 100; generally, the Agency is not concerned unless the MOE is less than 100. The analysis assumes uniform distribution of amitraz in the commodity supply and that residues are present at tolerance level for the published uses in addition to hops. The Agency considers this to be extremely unlikely.

The nature of the residue in plants and livestock is adequately understood. The analytical method is a common moiety method which converts amitraz and its two metabolites to 2,4-dimethylaniline. Determination of the residues is by gas chromatography using ^{63}Ni electron detection. There are currently no actions pending against continued registration of this chemical.

Based on the above information considered by the Agency, the tolerance established by amending 40 CFR part 180 would protect the public health. Therefore, it is proposed that the tolerance be established as set forth below.

Any person who has registered or submitted an application for registration of a pesticide, under FIFRA, as amended, which contains any of the ingredients listed herein, may request within 30 days after publication of this document in the **Federal Register** that this rulemaking proposal be referred to an Advisory Committee in accordance with FFDCA section 408(e).

Interested persons are invited to submit written comments on the proposed regulation. Comments must bear a notation indicating the document control number, [PP 4E4349/P582]. All written comments filed in response to this petition will be available in the Public Docket and Freedom of Information Section, at the address given above from 8 a.m. to 4 p.m., Monday through Friday, except legal holidays.

Pursuant to the requirements of the Regulatory Flexibility Act (Pub. L. 96-354, 94 Stat. 1164, 5 U.S.C. 601-612), the Administrator has determined that regulations establishing new tolerances or raising tolerance levels or establishing exemptions from tolerance requirements do not have a significant economic impact on a substantial number of small entities. A certification statement to this effect was published in the **Federal Register** of May 4, 1981 (46 FR 24950).

List of Subjects in 40 CFR Part 180

Environmental protection, Administrative practice and procedure, Agricultural commodities, Pesticides and pests, Recording and recordkeeping requirements.

Dated: May 9, 1994.

Stephen L. Johnson,

Acting Director, Registration Division, Office of Pesticide Programs.

Therefore, it is proposed that chapter I of title 40 Code of Federal Regulations be amended as follows:

PART 180—[AMENDED]

1. The authority citation for part 180 continues to read as follows:

Authority: 21 U.S.C. 346a and 371.

2. In § 180.287, by amending the table therein by adding and alphabetically inserting the raw agricultural

commodity dried hops, to read as follows:

§ 180.287 Amitraz; tolerances for residues.

* * * * *

Commodity	Parts per million
* * * * *	
Hops, dried[1]	75
* * * * *	

[1]Tolerance expires (*date 2 years after beginning date of final rule).*

[FR Doc. 94–12102 Filed 5–13–94; 2:31 pm]

BILLING CODE 6560–50–F

40 CFR Part 281

[FRL–4885–7]

Massachusetts; Approval of State Underground Storage Tank Program

AGENCY: Environmental Protection Agency.

ACTION: Notice of tentative determination to approve the State of Massachusetts' Underground Storage Tank program, public hearing and public comment period.

SUMMARY: The Commonwealth of Massachusetts has applied for final approval of its underground storage tank (UST) program under Subtitle I of the Resource Conservation and Recovery Act (RCRA). The Environmental Protection Agency (EPA) has reviewed Massachusetts' application and has made the tentative decision that Massachusetts' underground storage tank program satisfies all of the requirements necessary to qualify for final program approval. EPA intends to grant final approval to Massachusetts to operate its program in lieu of the Federal program. Massachusetts' application for final approval is available for public review and comment and a public hearing will be held to solicit comments on the application, if requested.

DATES: All written comments on Massachusetts' state program approval application must be postmarked no later than June 30, 1994. EPA will then respond to written comments where issues are raised concerning EPA's tentative program approval.

A public hearing is scheduled for June 30, 1994. The hearing will begin at 10 a.m. and will continue until the end of testimony or 1 p.m., whichever is later. Massachusetts will participate in any public hearing held by EPA on this subject. Requests to present oral comments at the hearing must be received at EPA by June 23, 1994. EPA reserves the right to cancel the public hearing if significant public interest in a hearing is not communicated to EPA in writing and postmarked by June 30, 1994. EPA will determine after June 23, 1994 whether there is significant interest to hold a public hearing. In the event the public hearing is cancelled, persons requesting to present oral comments will be timely notified of the cancellation.

ADDRESSES: Written comments should be mailed to Andrea Beland, Underground Storage Tank Program, HPU–7, USEPA, Region I, JFK Federal Building, Boston, Massachusetts 02203.

The public hearing will be held at 90 Canal Street, Boston, MA, Large First Floor Conference Room.

Copies of Massachusetts' final approval application are available between 8:30 a.m.–4 p.m., Monday through Friday, at the following locations for review and copying:

Massachusetts, Department of Environmental Protection, Bureau of Waste Site Cleanup, One Winter Street, Boston, Massachusetts 02108, Phone: (617) 292–5887;

Massachusetts, Department of Public Safety, Office of the State Fire Marshal (MA DPS), 1010 Commonwealth Avenue, Boston, Massachusetts 02215, Phone: (617) 351–6210;

USEPA Headquarters, Library, room 211A, 401 M Street, Washington, SW., DC 20460, Phone: (202) 382–5926;

USEPA, Region I Library, 1 Congress Street, 11th Floor, Boston, Massachusetts 02203, Phone: (617) 565–3300.

FOR FURTHER INFORMATION CONTACT: Andrea Beland, HPU–7, Underground Storage Tank Program, USEPA, Region I, JFK Federal Building, Boston, Massachusetts 02203, Phone: (617) 573–9604.

SUPPLEMENTARY INFORMATION:

A. Background

Section 9004 of the Resource Conservation and Recovery Act (RCRA), 42 U.S.C. 9004, authorizes EPA to approve State underground storage tank programs to operate in lieu of the Federal underground storage tank (UST) program. Program approval is granted by EPA, if the Agency finds that the State program:

(1) Is "no less stringent" than the Federal program in all seven elements found at 40 CFR part 281;

(2) Includes the notification requirements found at section 9004(a)(8), 42 U.S.C. 6991c(a)(8); and

(3) Provides for adequate enforcement of compliance with UST standards at section 9004(a), 42 U.S.C. 6991c(a).

B. Massachusetts

On December of 1991, the Commonwealth of Massachusetts submitted a draft application to EPA for program approval. The Massachusetts Department of Public Safety (MA DPS) and the Massachusetts Department of Environmental Protection (MA DEP) jointly prepared the application. MA DPS is responsible for the underground storage tank regulatory program, and the MA DEP is responsible for enforcing the leaking underground storage tank corrective action program. Prior to the submission, the MA DPS, working with EPA, amended its UST rules, to meet the "no less stringent" Federal requirements. Consistent with Massachusetts' laws, the Commonwealth provided public notice and an opportunity to comment on the amended regulations. A public hearing was held on February 25, 1992, and the regulations became effective on March 27, 1992.

In accordance with the requirements of 40 CFR 281.50(b), Massachusetts published a public notice on June 9, 1992, announcing a public hearing to be held on July 9, 1992, and requesting comments on Massachusetts' intention to seek program approval. On November 23, 1992, EPA received a Final Application for program approval. The regulations governing the Massachusetts UST technical requirements and those regulating releases were amended in the summer of 1993. The Commonwealth's UST technical regulations became effective on July 1, 1993 and the regulations covering releases became effective on October 1, 1993. The Commonwealth then submitted a revised Final Application for program approval to EPA on August 18, 1993. EPA reviewed Massachusetts' application and tentatively determined that the Commonwealth's program meets all of the requirements necessary to qualify for final program approval. Consequently, EPA intends to grant final approval to Massachusetts to operate its program in lieu of the Federal program.

Based on a detailed review of the Massachusetts' application for UST program approval, EPA has determined that the Massachusetts Department of Public Safety, through the Office of the State Fire Marshal has developed standards and criteria for the design, installation, operation, maintenance, and monitoring of underground storage tanks to prevent UST related ground and surface water contamination, under

the authority of Chapter 148, Section 38E of the Massachusetts General Laws. Chapter 148, Section 38E of the Massachusetts General Laws provides:

(1) Authority to promulgate UST regulations for controlling underground storage facilities containing petroleum and hazardous substances;

(2) Authority to impose civil penalties for violations of any statutory or regulatory requirement;

(3) Authority to conduct compliance monitoring inspections and other enforcement activities; and

(4) Notification requirements for owners of underground storage tanks including heating oil tanks.

In addition, the Massachusetts Department of Environmental Protection, through the Bureau of Waste Site Cleanup, has developed standards and criteria for the response and remediation of leaking underground storage tanks pursuant to Chapter 21E of the Massachusetts General Laws, the Massachusetts Oil and Hazardous Materials Release Prevention and Response Act, July 1, 1992, as amended. Chapter 21E of the Massachusetts General Laws provides:

(1) Authority to promulgate regulations for the response to and remediation of a release of oil or hazardous material;

(2) Authority to impose civil penalties for violations of any provision of the statute; and

(3) Authority to conduct compliance monitoring inspections and other enforcement activities.

C. Public Comments

In accordance with section 9004 of RCRA, 42 U.S.C. 6991c and 40 CFR 281.50(e), if sufficient public interest is received by June 23, 1994, EPA will hold a public hearing on its tentative decision on June 30, 1994 from 10 a.m.–1 p.m. at 90 Canal Street, Boston, MA, Large First Floor Conference Room. The public may also submit written comments on EPA's tentative determination. Written comments must be postmarked by June 30, 1994 as to allow EPA and the Commonwealth a reasonable opportunity to research and prepare responses. Copies of Massachusetts' application are available for inspection and copying at the locations indicated in the "Addresses" section of this document.

EPA will consider all public comments on its tentative determination received during the public comment period and at the hearing. Issues raised by those comments may be the basis for a decision to deny final approval to Massachusetts. EPA expects to make a final decision on whether or not to approve Massachusetts' program within sixty (60) days after the date of the public hearing and will give notice of it in the **Federal Register**. The notice will include a summary of the reasons for the final determination and a response to all significant comments.

Compliance With Executive Order 12866

The Office of Management and Budget has exempted this rule from the requirement of section 6 of Executive Order 12866.

Certification Under the Regulatory Flexibility Act

Pursuant to the provisions of 5 U.S.C 605(b), I hereby certify that this approval will not have a significant economic impact on a substantial number of small entities. The approval of Massachusetts' UST program effectively suspends the applicability of the Federal UST regulations, thereby eliminating duplicative requirements for owners and operators of underground storage tanks in the Commonwealth. It does not impose any new burdens on small entities. This rule, therefore, does not require a regulatory flexibility analysis.

List of Subjects in 40 CFR Part 281

Environmental protection, Administrative practice and procedure, Hazardous material, State program approval, Underground storage tanks.

Authority: This action is issued under the authority of section 9004 of the Solid Waste Disposal Act as amended, 42 U.S.C 6991c.

Dated: May 8, 1994.

Patricia L. Meaney,

Acting Regional Administrator.

[FR Doc. 94–11988 Filed 5–16–94; 8:45 am]

BILLING CODE 6560–50–F

FEDERAL COMMUNICATIONS COMMISSION

47 CFR Chapter I

[ET Docket No. 94–32; FCC 94–97]

Spectrum Below 5 GHz Transferred From Federal Government Use

AGENCY: Federal Communications Commission.

ACTION: Notice of inquiry.

SUMMARY: This Inquiry initiates a proceeding to determine the most appropriate use of 50 megahertz of spectrum that is being transferred from Federal Government use to private sector use. This action is necessary to comply with provisions of the Omnibus Budget Reconciliation Act of 1993 (Reconciliation Act) that require the Commission to allocate, and propose regulations to assign, this spectrum within 18 months of adoption of the Reconciliation Act. Our goal in this proceeding is to ensure that spectrum reallocated for private sector use will provide for the introduction of new services and the enhancement of existing services. These new and enhanced services will create new jobs, foster economic growth, and improve access to communications by industry and the American public.

DATES: Comments must be filed on or before June 15, 1994, and reply comments must be filed on or before June 30, 1994.

ADDRESSES: Federal Communications Commission, 1919 M St., NW., Washington, DC 20554.

FOR FURTHER INFORMATION CONTACT: Steve Sharkey, Office of Engineering and Technology, (202) 653–8151.

SUPPLEMENTARY INFORMATION: This is a summary of the Commission's Notice of Inquiry, PR Docket No. 94–32, FCC 94–97, Adopted April 20, 1994, and released May 4, 1994. The full text of this Notice of Inquiry is available for inspection during normal business hours in the Records Room of the Federal Communications Commission, room 239, 1919 M St., NW. Washington, DC. The complete text may be purchased from the Commission's copy contractor, ITS, Inc., 2100 M St., NW., suite 140, Washington, DC, 20037, telephone (202) 857–3800.

Summary of Notice of Inquiry

1. The purpose of this proceeding is to seek information on potential applications for 50 megahertz of spectrum that is being transferred immediately from Federal Government to private sector use as required by the Omnibus Budget Reconciliation Act of 1993, Omnibus Budget Reconciliation Act of 1993, Public Law 103–66, Title VI, Section 6001(a)(3), 107 Stat. 312 (approved August 10, 1993) (Reconciliation Act).

2. The Reconciliation Act requires that the Secretary of Commerce issue a preliminary report within six months of the date of its enactment identifying 200 megahertz of spectrum below 5 gigahertz currently allocated for use by Federal Government agencies, for transfer to the FCC for use by the private sector. The Reconciliation Act further requires the Secretary of Commerce to identify 50 megahertz of the 200 megahertz of spectrum that can be made available for reallocation immediately upon issuance of the preliminary report.

In compliance with these requirements, on February 10, 1994, the Department of Commerce released its report making a preliminary identification of spectrum for reallocation. Interested parties have until May 11, 1994, to file comments with the Secretary of Commerce regarding the spectrum identified.

3. The spectrum identified for immediate reallocation by the Department of Commerce is the 50 megahertz at the bands 2390–2400 MHz, 2402–2417 MHz and 4660–4685 MHz. The President must withdraw the assignment to a Federal Government station of any frequency recommended for immediate reallocation within 6 months of release of the preliminary report so that the spectrum is then available for exclusive non-Federal use. The Reconciliation Act requires that, by February 10, 1995, the Commission allocate, and propose regulations to assign, the 50 megahertz of spectrum that is immediately available. Accordingly, we seek comment as to the services to which this spectrum should be allocated and on specific rules for use of this spectrum to ensure that this spectrum is used to its maximum potential in permitting the continued growth and development of advanced communications, creating new high technology jobs, and providing economic growth.

Federal Communications Commission.

William F. Caton,

Acting Secretary.

[FR Doc. 94–11880 Filed 5–16–94; 8:45 am]

BILLING CODE 6712–01–M

DEPARTMENT OF TRANSPORTATION

National Highway Traffic Safety Administration

49 CFR Part 571

[Docket No. 94–39; Notice 1]

RIN 2127–AC62

Federal Motor Vehicle Safety Standards; Fuel System Integrity; Crossover Lines

AGENCY: National Highway Traffic Safety Administration (NHTSA), (DOT).

ACTION: Notice of proposed rulemaking (NPRM).

SUMMARY: This notice proposes to amend Federal Motor Vehicle Safety Standard No. 301, Fuel System Integrity, to require vehicles equipped with a crossover line connecting dual fuel tanks to comply with requirements that would reduce the likelihood of fuel spillage. The affected vehicles would be almost exclusively heavy trucks. A vehicle equipped with a crossover fuel line would not be permitted to have fuel spillage exceeding 30 grams (1 ounce) (by weight) beginning with the onset of the application of a 11,100 Newtons (2,500 pounds) test force and ending two minutes after the end of the test force application. The agency has tentatively determined that the proposed requirements would eliminate most of the fuel spillage from crossover line breakage and prevent a substantial number of fires and secondary crashes due to fuel spillage.

DATES: *Comments.* Comments must be received on or before July 18, 1994.

Proposed Effective Date. The proposed amendments in this notice would become effective [insert date one year after publication of a final rule in the **Federal Register**.]

ADDRESSES: Comments should refer to the docket and notice numbers above and be submitted to: Docket Section, National Highway Traffic Safety Administration, 400 Seventh Street, SW., Washington, DC 20590. Docket hours are 9:30 a.m. to 4 p.m., Monday through Friday.

FOR FURTHER INFORMATION CONTACT: Dr. William J.J. Liu, Office of Vehicle Safety Standards, National Highway Traffic Safety Administration, 400 Seventh Street, SW., Washington, DC, 20590. Telephone: (202) 366–2264.

SUPPLEMENTARY INFORMATION:

I. Background
- A. Current Federal Motor Vehicle Safety Standard No. 301
- B. Federal Motor Carrier Safety Regulations

II. Rulemaking Petition

III. Crossover Lines and Frangible Valves

IV. NHTSA's Initial Analysis of the California Highway Patrol Petition
- A. Grant Notice and Initial Study
- B. NHTSA's Test Program
- C. Society of Automotive Engineers

V. Agency's Decision to Propose Amending Standard No. 301
- A. General Considerations
- B. Requirements and Test Procedures
- C. Applicability
- D. Benefits
- E. Costs
- F. Leadtime

I. Background

A. Current Federal Motor Vehicle Safety Standard No. 301

Federal Motor Vehicle Safety Standard No. 301, Fuel System Integrity, specifies requirements for the integrity of the entire motor vehicle fuel system which includes the fuel tanks, lines and connections and emission controls. The standard's purpose is to reduce the deaths and injuries occurring in fires that result from fuel spillage during and after motor vehicle crashes, and resulting from ingestion of fuels during siphoning. The standard currently applies to passenger cars, and to multipurpose passenger vehicles, trucks and buses that have a gross vehicle weight rating (GVWR) of 10,000 pounds or less and use fuel with a boiling point above 32° Fahrenheit. The standard also applies to school buses with a GVWR over 10,000 pounds that use fuel with a boiling point above 32° F.

Standard No. 301 limits the amount of fuel spillage that can occur from fuel systems of vehicles both during and after various specified barrier impact tests. Fuel spillage as a result of any of the required impact tests cannot exceed one ounce by weight during the time from the start of the impact until motion of the vehicle has stopped, and cannot exceed a total of five ounces by weight in the five-minute period following cessation of motion. For the remaining portion of the test period, fuel spillage cannot exceed one ounce by weight during any one-minute interval. Similar fuel spillage limits are required for the standard's static rollover test.

The impact tests specified for all vehicles that have a GVWR of 10,000 pounds or less are a 30-mph frontal fixed barrier impact, a 30-mph rear moving barrier impact, and a 20-mph lateral moving flat barrier impact. A static rollover test is conducted following the barrier impacts.

Only one impact test is specified for heavy school buses, i.e., those with a GVWR over 10,000 pounds. It is a 30-mph moving contoured barrier crash test at any point and any angle. A static rollover test is not specified for heavy school buses.

B. Federal Motor Carrier Safety Regulations

The Federal Highway Administration (FHWA) requires commercial motor vehicles engaged in interstate commerce to comply with its Federal Motor Carrier Safety Regulations (FMCSRs). Among the FMCSRs' requirements in Subpart E for Fuel Systems are ones addressing fuel lines (§ 393.65(f)) and fuel line valves (§ 393.65(g)). Section 393.65(f), Fuel Lines, states that a fuel line which is not completely enclosed in a protective housing must not extend more than two inches below the fuel tank or its sump. Diesel fuel crossover, return, and withdrawal lines which extend below the bottom of the tank or sump must be protected against damage

from impact.[1] Under this provision, every fuel line must be (1) long enough and flexible enough to accommodate normal movements of the parts to which it is attached without incurring damage and (2) secured against chafing, kinking, or other causes of mechanical damage. Section 393.65(f), Excess flow valve, states that when pressure devices are used to force fuel from a fuel tank, a device, which prevents the flow of fuel from the fuel tank if the fuel feed line is broken, must be installed in the fuel system.

II. Rulemaking Petition

On May 30, 1986, the California Highway Patrol (CHP) submitted a rulemaking petition to NHTSA to amend Standard No. 301 to apply to medium and heavy trucks and truck tractors, i.e., those that have a GVWR greater than 10,000 pounds.[2] The petition requested NHTSA to add performance requirements to reduce the frequency and magnitude of fuel spills caused when road debris damage the fuel tank, the shut-off valve, or the crossover line on medium and heavy trucks and truck tractors.

The CHP based its petition on data gathered from 142 diesel fuel spills that occurred on Southern California highways during 1984 and 1985. According to the petition, "one-third of the 142 spills were caused by an object on the road being struck by [a heavy vehicle's] front wheels and thrown against the tank or fuel lines." CHP stated that the major consequence of these diesel fuel spills was the cost to the State of cleaning the spill, investigating the leak, and undertaking traffic control. In addition, CHP stated that seven "secondary" accidents were caused by vehicles that struck a dropped fuel tank or skidded out-of-control on spilled fuel. Based on the above considerations, CHP requested that NHTSA issue standards that would protect fuel lines, crossover lines and bottom fittings against breakage from road debris.

III. Crossover Lines and Frangible Valves

By gravitational effect, a crossover line enables both fuel tanks to maintain a constant fuel level and allows the engine to draw fuel from only one tank. On vehicles equipped with dual tanks, the crossover line is typically one of the fuel system components close to the ground. In this location, unprotected crossover lines are susceptible to being struck by road debris, or being snagged in crashes when the truck overrides another vehicle or highway structure.

Given this potential danger, vehicle manufacturers may protect crossover lines from contact with road debris by routing the fuel line through a metal sleeve or attaching the fuel line to the rear of an angle iron or beam. Nevertheless, this manner of protection at times is not capable of preventing crossover line failures when a truck overrides another vehicle or highway structure.

Another way to protect crossover lines is through the use of breakaway/frangible valves which stop fuel flow if the crossover line fails.[3] Such devices are installed at the point where the line would otherwise be attached to each tank. They serve as the weakest point in the line, so that they break before any other part of the line fails. When the frangible valve breaks, it seals both sides of the break, thus stopping the fuel flow before fuel can be spilled. To date, relatively few motor vehicles have been equipped with these devices.

IV. NHTSA's Initial Analysis of the California Highway Patrol Petition

A. Grant Notice and Initial Study

On May 2, 1988, NHTSA published a notice granting the CHP petition that requested Standard No. 301 be amended to establish minimum positioning, size, and strength requirements to protect fuel lines, crossover lines and bottom fittings against breakage when struck by road debris. (53 FR 15578). In the grant notice, the agency stated that

> The issues raised by the petitioner warrant further consideration. NHTSA plans to conduct research into the issue of heavy vehicle post-crash fires to determine whether rulemaking is appropriate on this issue.

In September 1989, NHTSA published a final report titled, "Heavy Truck Fuel System Safety Study—Prepared in Response to Senate Report No. 100–198 HR 2890 Department of Transportation and Related Agencies Appropriation Act of 1988," based on a research study prepared by the University of Maryland's Fire Protection Engineering Department.[4] The report analyzed and discussed accident records for truck fuel system fires, diesel fuel system designs, chemistry and physics of truck fires, system safety analyses, and fire mitigation strategies. With respect to the CHP petition, the report found that spilled diesel fuel is difficult to ignite, except during crashes when the fuel may be misted or vaporized. The report concluded that in some instances, fires originate from diesel fuel spilled from breached fuel system components, and improvements to the fuel system to prevent breaching may be possible. In addition, the report indicated that significant benefits could be obtained by improving the protection of crossover lines.

B. NHTSA's Test Program

NHTSA's Vehicle Research and Test Center (VRTC) prepared a report titled, "Testing to Develop Fuel System Integrity Standard," March 1992, based on a test program evaluating crossover lines. A copy of this report has been placed in the docket. The purpose of the test program was to develop a test procedure that could be used in a performance standard to ensure crossover line integrity. VRTC employed a quasi-static pull test in which force was applied at a constant displacement rate to crossover lines to evaluate crossover line protection. While such a test is not an exact replication of conditions in which road debris strike a crossover line, it provides an acceptable approximation of that situation. Further, it provides an easily duplicated and repeatable method of evaluation.

The VRTC study found that a shear force of between 100 and 600 pounds is necessary to sever frangible valves while a shear force between 700 and 1,000 pounds is necessary to sever an unprotected fuel line. The study also found that devices called "substantial protection devices" protect crossover fuel lines even when a shear force of 11,100 Newtons (2,500 pounds) is applied. The basis for the 11,000 Newtons (2,500 pounds) is discussed in a subsequent section of the notice titled "Requirements and Test Procedures." "Substantial protection devices" are used as a brace loaded in compression to reduce the amount of flexing of the frame and the tank mounting brackets. They are typically metal frames in which the crossover lines are placed. They are typically bolted to the tank mounting brackets, with the brackets providing longitudinal support. In contrast, testing of "non-substantial protection devices" indicated that they offer little additional protection for the crossover line. This type of protection device is typically light weight and is bolted to the frame rails.

VRTC concluded that a potentially appropriate test procedure would be one specifying the application of a specified force to the crossover line protection device. That procedure could be coupled with a requirement limiting the

[1] A crossover line is a flexible hose connected between two vehicle fuel tanks at or near the bottom of the tanks.

[2] These vehicles are referred to as "heavy trucks" throughout the remainder of the notice.

[3] These valves are referred to as frangible valves throughout the remainder of the document.

[4] (DOT HS–807–484, September 1989).

maximum amount of fuel leakage that would be allowed during the force application and for a period of time thereafter.

C. Society of Automotive Engineers.

NHTSA notes that the Society of Automotive Engineers (SAE) is currently drafting a Recommend Practice, J1624, Fuel Crossover Line, to evaluate crossover lines and set minimum strength requirements for these devices. This Recommended Practice would set forth tests procedures and requirements related to crossover lines. The SAE draft Recommended Practice includes a different test procedure than the one being proposed by NHTSA. The Recommended Practice specifies a different and higher load level (22,200 Newtons (5,000 pounds) compared to 11,100 Newtons (2,500 pounds)), and the load is applied in a different manner. In addition, the Recommended Practice requires the removal of the vehicle's transmission, an action the agency disfavors. NHTSA requests comments on the differences between these procedures and their effect on benefits and costs.

V. Agency's Decision to Propose Amending Standard No. 301

A. General Considerations

Based on the foregoing and other available information, NHTSA has decided to propose amending Standard No. 301 to limit fuel spillage experienced by vehicles equipped with a crossover fuel line to 30 grams (1 ounce) (by weight) beginning with the onset of the application of a 11,100 Newtons (2,500 pounds) test force and ending two minutes after the end of the test force application.

The agency envisions two primary methods by which a vehicle manufacturer could comply with the proposed requirements. One would be the installation of a "substantial protection device." The other would be the installation of a frangible valve.

The agency has tentatively determined that the proposed requirements would eliminate most of the fuel spillage from crossover line breakage and annually prevent one fatality and 55 injuries that occur in secondary crashes due to fuel spillage. A detailed analysis of the rulemaking's anticipated benefits is presented in the Preliminary Regulatory Evaluation (PRE), which has been placed in the public docket.

NHTSA requests comments on the proposal, including whether there is a safety need for it. Would the installation of a substantial crossover line protection device or frangible valves on a crossover line prevent fuel spillage from damaged crossover lines due to impacts by highway debris or other crashes? To what extent are other components in the fuel system (e.g., supply and return lines, water separators, fuel heaters) vulnerable to damage from road debris?

B. Requirements and Test Procedures

NHTSA is proposing several details related to the crossover line requirement and test procedures. These include the permissible amount of fuel spillage, the appropriate maximum test load, the time for evaluating fuel spillage, the nature of force application, the point and angle of force application, and the nature of the test apparatus.

As explained above, each vehicle that is equipped with a crossover line connecting dual fuel tanks would be permitted to have only a limited amount of fuel spillage after the application of a test force. The proposed requirement would permit fuel spillage of 30 grams (1 ounce) by weight. This amount of fuel spillage is based on the VRTC report of crossover lines that indicated that no frangible valve is capable of stopping the fluid flow instantaneously. It is also based on previous agency rulemakings about fuel system integrity. For instance, the static rollover test in Standard No. 301 permits fuel spillage of 30 grams (1 ounce) per minute after each 90° rotation. (See S6.4) The agency invites comments about whether to permit fuel spillage in addition to 30 grams of fuel.

NHTSA is proposing to specify that a test force of 11,100 Newtons (2,500 pounds) be applied to any crossover fuel line connecting dual fuel tanks. This test force is based on the tests run by VRTC. These tests indicated that a force application of 11,100 Newtons (2,500 pounds) would be sufficient to require the installation of devices that would protect the crossover lines while screening out less protective devices. The agency invites comments on whether the proposed test load is appropriate to ensure crossover line integrity. Would the agency's specification of a shear force less than 11,100 Newtons (2,500 pounds) result in a significant increase in the number of severed fuel lines compared to the number that would occur if a shear force of 11,100 Newtons (2,500 pounds) were specified? If so, how much of an increase would be expected? How often do vehicles equipped with a crossover line contact road debris but not leak? Conversely, would it be more appropriate to specify a higher test force?

The proposed time period for evaluating the fuel spillage from the crossover line begins with the onset of the application of the test force and ends two minutes after the end of the test force application. The agency tentatively concludes that a two minute period is sufficient to evaluate a crossover fuel line failure. The agency requests comments on whether the proposed two minute period is appropriate to ensure crossover fuel line integrity.

NHTSA is proposing to specify that the test force be applied to the full level between 10 and 20 seconds, be maintained between 5 and 10 seconds, and then be released. This time frame is based on the VRTC tests. The agency considered an alternative approach in which the load would have been applied at a rate of 1.9 cm/second. However, the agency has tentatively concluded that the apply-hold-release time provision is consistent with practical laboratory procedures. NHTSA requests comments about how the force application should be specified.

NHTSA is proposing to specify that the test force be applied downward in a vertical plane and toward the rear of the vehicle, parallel to the longitudinal axis of the vehicle, and at an angle of 15° with the road surface. This test condition is based on VRTC's recommendation that the pull test be conducted at a 15° angle relative to the road. The agency notes that in real-world situations in which road debris contact the vehicle, the dynamic load would be applied at various angles. Nevertheless, the general direction is toward the rear of the vehicle. The tests at VRTC indicated that the small variations in test angle between 0° and 15° did not significantly affect the test results. The agency believes that this test angle would simplify the test set-up, thereby making it more practicable.

NHTSA is also proposing specific provisions related to the test apparatus, a hydraulic device whose characteristics are described in Figures 3 and 4. The test apparatus incorporates a loading application device attached to the end of a hydraulic pulling device which pulls the crossover line structure. The test loading application device has a length of four inches which would be placed around the crossover line or support structure. This would enable testing the exposed ends of a crossover line near the juncture at the fuel tank if the exposed area exceeded four inches in length. An additional allowance of two inches is provided since the test load application device may not fit over curved portions of a crossover support structure at its transition from

horizontal to vertical. Exposed portions of crossover lines would have to be tested if the exposed length of crossover line exceeds six inches. NHTSA requests comments about the proposed test conditions as well as alternative procedures such as the SAE Recommended Practice J1624.

C. Applicability

Standard No. 301 currently applies to vehicles with a GVWR of 10,000 pounds or less and to heavy school buses. This notice proposes to extend Standard No. 301's applicability to any vehicle that is equipped with a crossover line that connects dual fuel tanks. As a practical matter, the proposed amendment would affect heavy trucks almost exclusively. A majority of these vehicles are equipped with a crossover line that connects dual fuel tanks. In contrast, light vehicles typically are not equipped with dual fuel tanks equipped with a crossover line. Nevertheless, even though the proposal would not affect light vehicles, the agency is proposing to apply the requirements to any vehicle equipped with a crossover line that connects dual tanks in case light vehicles are equipped with such devices in the future.

The proposed requirements would affect a vehicle only if it is equipped with a crossover line connecting dual fuel tanks. The proposal would not require a vehicle to be equipped with crossover lines. Further, the proposal would not prevent vehicles equipped with dual fuel tanks from being equipped with devices other than crossover lines for filling up both fuel tanks (e.g., dual fuel supply and returns system). The agency does not wish to hinder the efforts of manufacturers which are developing devices that may eliminate the need for crossover lines. The agency requests comments about the applicability of the proposed crossover line integrity requirements.

D. Benefits

NHTSA anticipates that, if adopted, the proposed amendment to Standard No. 301 would significantly reduce the potential involvement of heavy truck crossover lines in fatal and injury-producing accidents. As a result of the amendment, there would be fewer breached fuel lines and less fuel spilled by heavy trucks. The PRE estimates that the rulemaking would prevent one fatality and two injuries each year resulting from crossover line breaches in crashes involving truck undercarriages. In addition, the rule would prevent one fatality and 55 injuries that occur in secondary crashes. NHTSA also estimates that about 131,000 gallons of fuel are spilled each year from crossover lines that are breached. The annual direct economic costs associated with this fuel spillage are estimated to be $8,423,000 per year. These costs are broken down as follows: Fuel spill cleanup costs of $2,181,000, traffic delays of 221,000 vehicle-hours costing $2,393,000 in lost productivity, environmental damage of $3,425,000 from unreported fuel spills that are not properly cleaned-up, vehicle property damage of $276,000, and fuel spillage loss of $148,000. While no studies have been conducted to estimate an effectiveness rate for the proposed requirement, i.e., the degree to which it would prevent these losses, the agency expects that a high percentage of the fuel spillage incidents and the associated costs would be prevented, since most of the frangible valves now on the market appear to be able to prevent fuel spillage.

NHTSA requests comments about the anticipated benefits of the proposal to reduce fuel spillage in vehicles with crossover lines. Please provide any information on frangible valve performance in over-the-road usage.

E. Costs

Among the PRE's principal conclusions are that vehicle manufacturers could comply with the proposed performance requirements and thus eliminate crossover fuel line spills by either installing frangible valves, or by providing a crossover line protection device. NHTSA is basing the following estimate on the alternative to install frangible valves since they appear to provide more protection against spills at a lower cost. The vehicle manufacturers' choice of frangible valves would minimize the rulemaking's overall costs. These valves are currently commercially available for a valve manufacturer's estimated retail cost of $25 per valve including installation. However, based on agency discussions with valve manufacturers, the cost could be as low as $15 per valve installed, if sufficient quantities are purchased at a wholesale rate. This would result in a cost of between $30 and $50 per vehicle to equip both sides of the crossover line with frangible valves, since two valves are needed. Given this range of between $30 and $50 per vehicle, the agency has decided to use an average cost of $40 per vehicle in the PRE. The agency requests comments about whether this estimate accurately represents the costs related to preventing fuel spillage caused by severed crossover lines.

NHTSA estimates that the costs associated with installing "more substantial" crossover protection structures rather than "less substantial" structures" to be $50 to $60 per vehicle. This includes the extra cost of steel structural components and labor to manufacture the structure. In addition, "more substantial" structures would result in a weight premium of an estimated 20 pounds. Because of this weight penalty and the higher estimated cost, NHTSA believes that most vehicle manufacturers and operators would use frangible valves.

NHTSA notes that eliminating the crossover line by installing dual supply and return lines on trucks is an alternative to increasing the strength of the crossover line structure or installing frangible valves. Although the agency has not determined the precise cost of dual supply and return systems, it believes that their cost would be higher than either frangible valves or substantial crossover support structures. The agency requests data about the number of vehicles using dual supply and return systems versus vehicles using crossover lines.

According to the Motor Vehicle Manufacturers Association publication, "1992 Facts & Figures," there were 70,831 medium and 171,309 heavy new trucks sold in the United States in 1991. The agency estimates that about 20 percent of medium trucks and 70 percent of heavy trucks are equipped with dual fuel tanks, based on information provided by truck manufacturers. Based on these figures, 14,166 medium and 119,916 heavy new trucks were equipped with crossover lines in 1991. Based on those figures, the annual cost to install frangible valves on these vehicles at a cost of $40 per vehicle would be as follows:

Medium Trucks—$567,000
Heavy Trucks—$4,797,000
Total Cost—$5,364,000

NHTSA requests comments about the current production levels of vehicles equipped with crossover lines. What number and percentage of heavy, medium, and light trucks are equipped with dual fuel tanks? By vehicle size, what number and percentage of dual fuel tanks are equipped with a crossover line? For dual fuel tanks that are not equipped with a crossover line, what method of fuel level equalization is used? By vehicle size, what number and percentage of dual fuel tanks are equipped with alternative fuel equalization devices? Is there a trend for vehicles with dual fuel tanks to be equipped with dual feed and return lines for drawing fuel from both fuel tanks?

NHTSA also requests comments about the current production levels of vehicles

equipped with devices used to prevent or reduce the number of crossover line breaches. What number and percentage of vehicles equipped with crossover lines are equipped with (1) crossover line protection devices that would meet the proposed strength requirements, (2) frangible valves, or (3) any other technologies that would enable a vehicle to comply with the proposed requirements?

NHTSA anticipates that the compliance test costs incurred by vehicle manufacturers would not be significant because it believes that most manufacturers would meet the proposed requirements by installing frangible valves instead of providing crossover protection devices. The agency estimates that most of the cost associated with conducting the proposed compliance test would be about $400 to $1000, with the cost range of $400 for a manufacturer with in-house equipment and capability to $1,000 for a manufacturer using an outside laboratory. The agency requests comments about the cost of compliance testing of the proposed requirements.

F. Leadtime

NHTSA anticipates that truck manufacturers would need to devote relatively minor engineering and development time to incorporate frangible valves or crossover line protection devices in their current vehicle designs. Frangible valves are readily available. The agency expects that valve manufacturers could increase production to meet the additional demand for such valves. Since the agency does not anticipate any significant leadtime problems, it is proposing that the amendment take effect one year after the final rule's publication in the Federal Register. The agency welcomes comments about whether such a leadtime is appropriate.

Rulemaking Analyses and Notices

Executive Order 12866 and DOT Regulatory Policies and Procedures

This notice was not reviewed under E.O. 12866. NHTSA has analyzed this proposal and determined that it is not "significant" within the meaning of the Department of Transportation's regulatory policies and procedures. A PRE setting forth the agency's detailed analysis of the economic effects of this proposal has been prepared and been placed in the docket. A summary of the anticipated benefits and costs appears above.

Regulatory Flexibility Act

In accordance with the Regulatory Flexibility Act, NHTSA has evaluated the effects of this action on small entities. Based upon this evaluation, I certify that the proposed amendments would not have a significant economic impact on a substantial number of small entities. This action would primarily affect the manufacturers of heavy trucks and frangible valves. The agency is not aware of any manufacturer of heavy vehicles or frangible valves that would be considered a small entity. The agency does expect that the requirements would increase the market for and production of such valves. The added cost of modifying a vehicle to comply with the proposed requirements is very small in comparison to the overall cost of a vehicle. Therefore, these changes would not significantly affect purchase decisions. The industry test cost per vehicle to assure compliance with the proposal would be even smaller in comparison to the vehicle's overall price. For these reasons, vehicle manufacturers, small businesses, small organizations, and small governmental units which purchase motor vehicles would not be significantly affected by the proposed requirements. Accordingly, no regulatory flexibility analysis has been prepared.

Executive Order 12612 (Federalism)

This agency has analyzed this action in accordance with the principles and criteria contained in E.O. 12612 and has determined that the proposed rule would not have sufficient Federalism implications to warrant preparation of a Federalism Assessment. No State laws would be affected.

National Environmental Policy Act

The agency has considered the environmental implications of this proposed rule in accordance with the National Environmental Policy Act of 1969 and has determined that the proposed rule would improve the human environment by eliminating spillage of approximately 131,000 gallons of fuel each year.

Civil Justice Reform

This proposed rule would not have any retroactive effect. Under section 103(d) of the National Traffic and Motor Vehicle Safety Act (Safety Act; 15 U.S.C. 1392(d)), whenever a Federal motor vehicle safety standard is in effect, a state may not adopt or maintain a safety standard applicable to the same aspect of performance which is not identical to the Federal standard, except to the extent that the state requirement imposes a higher level of performance and applies only to vehicles procured for the State's use. Section 105 of the Safety Act (15 U.S.C. 1394) sets forth a procedure for judicial review of final rules establishing, amending or revoking Federal motor vehicle safety standards. That section does not require submission of a petition for reconsideration or other administrative proceedings before parties may file suit in court.

Public Comments

Interested persons are invited to submit comments on the proposal. It is requested but not required that 10 copies be submitted.

All comments must not exceed 15 pages in length. (49 CFR 553.21). Necessary attachments may be appended to these submissions without regard to the 15-page limit. This limitation is intended to encourage commenters to detail their primary arguments in a concise fashion.

If a commenter wishes to submit certain information under a claim of confidentiality, three copies of the complete submission, including purportedly confidential business information, should be submitted to the Chief Counsel, NHTSA, at the street address given above, and seven copies from which the purportedly confidential information has been deleted should be submitted to the Docket Section. A request for confidentiality should be accompanied by a cover letter setting forth the information specified in the agency's confidential business information regulation. 49 CFR part 512.

All comments received before the close of business on the comment closing date indicated above for the proposal will be considered, and will be available for examination in the docket at the above address both before and after that date. To the extent possible, comments filed after the closing date will also be considered. Comments received too late for consideration in regard to the final rule will be considered as suggestions for further rulemaking action. The NHTSA will continue to file relevant information as it becomes available in the docket after the closing date, and it is recommended that interested persons continue to examine the docket for new material.

Those persons desiring to be notified upon receipt of their comments in the rules docket should enclose a self-addressed, stamped postcard in the envelope with their comments. Upon receiving the comments, the docket supervisor will return the postcard by mail.

List of Subjects in 49 CFR part 571

Imports, Motor vehicle safety, Motor vehicles, Rubber and rubber products, Tires.

In consideration of the foregoing, the agency proposes to amend 49 CFR 571.301, Fuel System Integrity, to read as follows:

PART 571— FEDERAL MOTOR VEHICLE SAFETY STANDARDS

1. The authority citation for part 571 would continue to read as follows:

Authority: 15 U.S.C. 1392, 1401, 1403, 1407; delegation of authority at 49 CFR 1.50.

2. Section 571.301 would be amended by revising S3, S5, S6 and the introductory text of S7 to read as follows and by adding a definition of "crossover line" to S4 to be placed in the proper alphabetical location and by adding S7.6 through S7.6.3 to read as follows:

§ 571.301 Standard No. 301, Fuel System Integrity.

* * * * *

S3. *Application.* This standard applies to passenger cars, and to multipurpose passenger vehicles, trucks and buses that have a GVWR of 10,000 pounds or less and use fuel with a boiling point above 32° F, and to school buses that have a GVWR greater than 10,000 pounds and use fuel with a boiling point above 32° F. In addition, S5.8 applies to each vehicle that is equipped with a crossover line connecting dual fuel tanks and uses fuel with a boiling point above 32° F.

S4. *Definitions.*

* * * * *

"Crossover line" means a flexible hose connected between two fuel tanks at or near the bottom of the fuel tanks.

* * * * *

S5. *General requirements.*

S5.1 *Passenger cars, and multipurpose passenger vehicles, trucks, and buses with a GVWR of 10,000 pounds or less.* Each passenger car and each multipurpose passenger vehicle, truck, and bus with a GVWR of 10,000 pounds or less shall meet the requirements of S6.1 through S6.4. Each of these types of vehicles that is manufactured to use alcohol fuels shall also meet the requirements of S6.6. Each vehicle that is equipped with a crossover line connecting dual fuel tanks shall also meet the requirements of S6.7.

S5.2 [Reserved]

S5.3 *Vehicles (Other than Schoolbuses) with a GVWR greater than 10,000 pounds.* Each vehicle (other than a schoolbus) with a GVWR greater than 10,000 pounds that is equipped with a crossover line connecting dual fuel tanks shall meet the requirements of S6.7.

S5.4 *Schoolbuses with a GVWR greater than 10,000 pounds.* Each schoolbus with a GVWR greater than 10,000 pounds shall meet the requirements of S6.5. Each schoolbus with a GVWR greater than 10,000 pounds that is manufactured to use alcohol fuels shall meet the requirements of S6.6. Each schoolbus with a GVWR greater than 10,000 pounds that is equipped with a crossover line connecting dual fuel tanks shall meet the requirements of S6.7.

S5.5 *Fuel spillage: Barrier crash.* Fuel spillage for each vehicle in any fixed or moving barrier crash test shall not exceed 1 ounce by weight from impact until motion of the vehicle has ceased, and shall not exceed a total of 5 ounces by weight in the 5-minute period following cessation of motion. For the subsequent 25-minute period, fuel spillage during any 1-minute interval shall not exceed 1 ounce by weight.

S5.6 *Fuel spillage: Rollover.* Fuel spillage for each vehicle in any rollover test, from onset of rotational motion shall not exceed a total of 5 ounces by weight for the first 5 minutes of testing at each successive 90° increment. For the remaining testing period, at each increment of 90°, fuel spillage during any 1-minute interval shall not exceed 1 ounce by weight.

S5.7 *Alcohol fuel vehicles.* Each vehicle manufactured to operate on an alcohol fuel (e.g., methanol, ethanol) or a fuel blend containing at least 20 percent alcohol fuel shall meet the requirements of S6.6.

S5.8 *Fuel spillage: Crossover line.* Fuel spillage for each vehicle that is equipped with a crossover line connecting two fuel tanks shall not exceed 30 grams (1 ounce) by weight of fuel in the two-minute period following the end of the test force application.

S6. *Test Requirements.*

(a) Each vehicle with a GVWR of 10,000 pounds or less shall meet the requirements of any applicable barrier crash test followed by a static rollover, without alteration of the vehicle during test sequence. A particular vehicle need not meet further requirements after having been subjected to a single barrier crash test and a static rollover test. In addition, each vehicle that is equipped with a crossover line connecting two fuel tanks shall meet the crossover line test set forth in S6.7.

(b) Each vehicle with a GVWR greater than 10,000 pounds that is equipped with a crossover line connecting two fuel tanks shall meet the crossover line test set forth in S6.7.

S6.1 *Frontal barrier crash.* When the vehicle traveling longitudinally forward at any speed up to and including 30 mph impacts a fixed collision barrier that is perpendicular to the line of travel of the vehicle, or at any angle up to 30° in either direction from the perpendicular to the line of travel of the vehicle, with 50th percentile test dummies as specified in part 572 of this chapter at each front outboard designated seating position and at any other position whose protection system is required to be tested by a dummy under the provisions of Standard No. 208, under the applicable conditions of S7., fuel spillage shall not exceed the limits of S5.5.

S6.2 *Rear moving barrier crash.* When the vehicle is impacted from the rear by a barrier moving at 30 mph, with test dummies as specified in part 572 of this chapter at each front outboard designated seating position, under the applicable conditions of S5.7, fuel spillage shall not exceed the limits of S5.5.

S6.3 *Lateral moving barrier crash.* When the vehicle is impacted laterally on either side by a barrier moving at 20 mph with 50th-percentile test dummies as specified in part 572 of this chapter at positions required for testing to Standard No. 208, under the applicable conditions of S5.7, fuel spillage shall not exceed the limits of S5.5.

S6.4 *Static rollover.* When the vehicle is rotated on its longitudinal axis to each successive increment of 90° following an impact crash of S6.1, S6.2, or S6.3, fuel spillage shall not exceed the limits of S5.6.

S6.5 *Moving contoured barrier crash.* When the moving contoured barrier assembly traveling longitudinally forward at any speed up to and including 30 mph impacts the test vehicle (schoolbus with a GVWR exceeding 10,000 pounds) at any point and angle, under the applicable conditions of S7.1 and S7.5, fuel spillage shall not exceed the limits of S5.5.

S6.6 *Anti-siphoning test for alcohol fuel vehicles.* Each vehicle shall have means that prevent a hose made of vinyl plastic or rubber, with a length of not less than 120 centimeters (cm) (47.2 inches) and an outside diameter of not more than 5.2 millimeters (mm) (0.20 inches), from contacting the level surface of the liquid fuel in the vehicle's fuel tank or fuel system, when the hose is inserted into the filler neck attached to the fuel tank with the fuel tank filled

to any level from 90 to 95 percent of capacity.

S6.7 *Crossover fuel lines.* When the crossover fuel line test apparatus is applied to the test vehicle at any point along the crossover fuel line (including the contiguous protective structure) with a force of 11,100 Newtons (2,500 pounds), under the applicable conditions of S7.1 and S7.6, fuel spillage shall not exceed the limits of S5.8.

S7 *Test conditions.* The requirements of S5.1, S5.3, S5.4, S5.5 and S5.6 and S6.1, S6.2., S6.3, S6.4, and S6.5 shall be met under the following conditions. The requirements of S5.8 and S6.7 shall be met under the conditions set forth in S7.1.1, S7.1.2, S7.1.5, and S7.6. Where a range is specified, the vehicle shall be capable of meeting the requirements at all points within the range.

* * * * *

S7.6 *Crossover line test conditions.* Compliance with S5.8 and S6.7 shall be demonstrated in accordance with the following:

S7.6.1 Place and level the test vehicle on a rigid surface so that it is entirely supported by means of the vehicle frame. Secure the test vehicle so as to prevent any motion of the test load.

S7.6.2 Apply the test force specified in S6.7, as shown in Figures 3 and 4, in a downward direction in a vertical plane toward the rear of the vehicle direction, and parallel to the vehicle's longitudinal axis, at an angle of 15° with respect to the road surface.

S7.6.3 Load the crossover line to the 11,100 Newtons (2,500 pounds) in not less than 10 seconds or more than 20 seconds and maintain it for not less than 5 or more than 10 seconds. Release the test force in not less than 5 or more than 10 seconds.

S7.6.4 Apply the test force until either 11,100 Newtons (2,500 pounds) is reached, or the crossover line is severed, or total separation of any of the crossover line valves occurs.

S7.6.5 Ensure that the fuel supply and return lines remain in place for the testing if they are located on the crossover line.

§ 571.301 [Amended]

3. Section 571.301 would be amended by adding Figure 3 and Figure 4 to read as follows:

BILLING CODE 4510–59–P

Crossover Line Test Apparatus

(Figure 3)

Top View

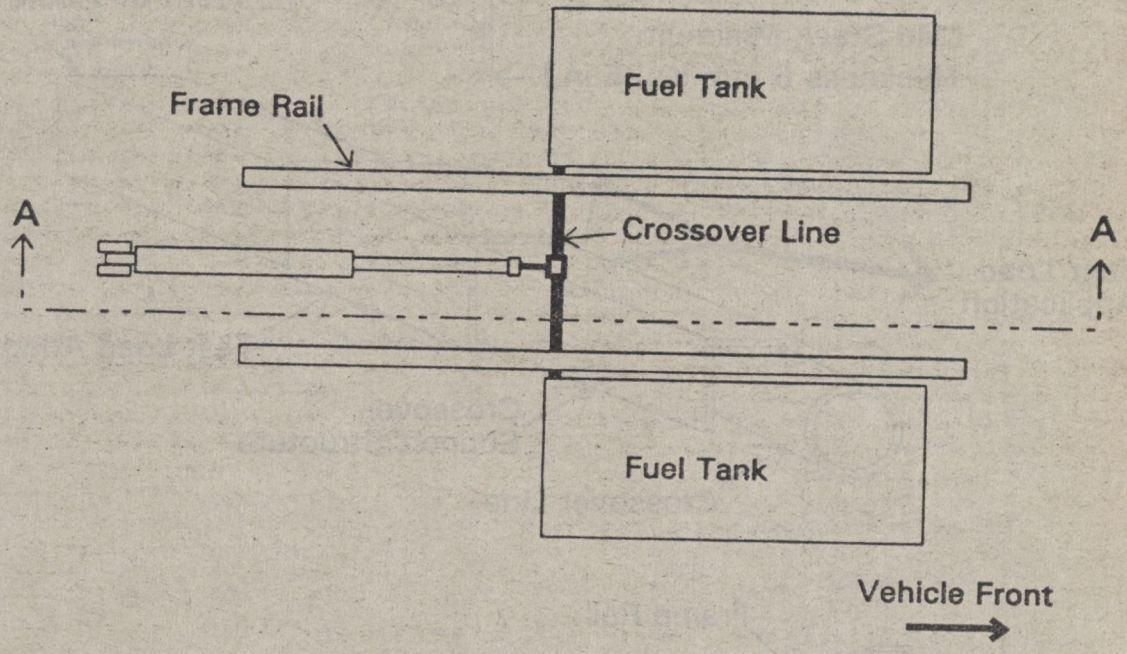

Side View

(Section A-A)

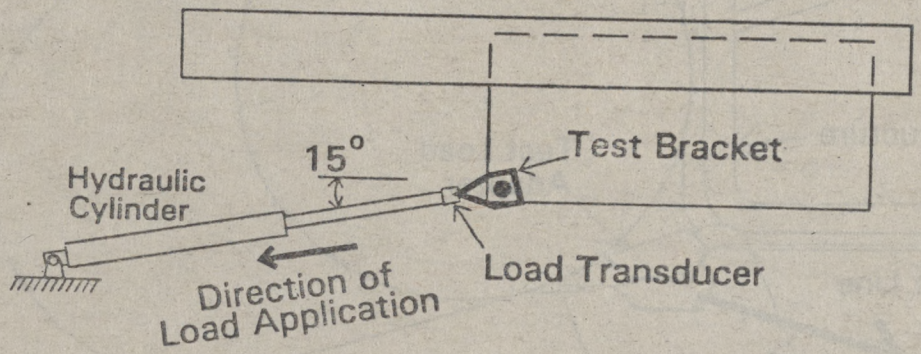

Crossover Line Test Apparatus

(Figure 4)

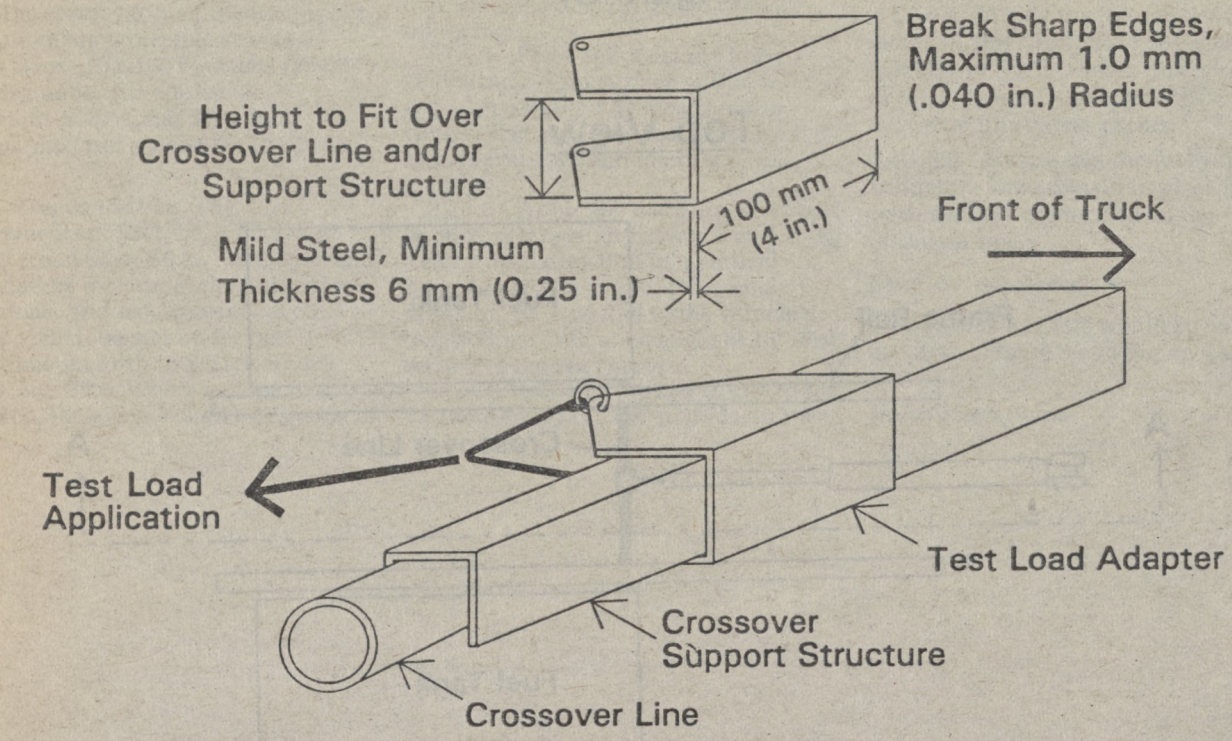

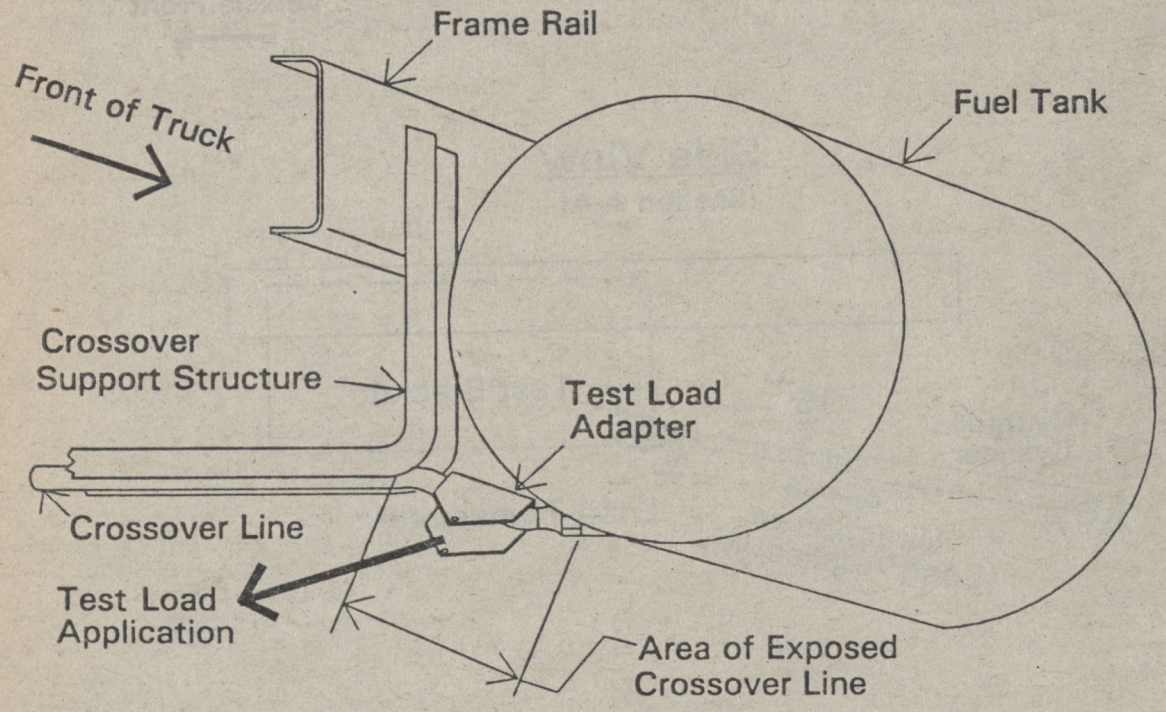

BILLING CODE 4910-59-C

Issued on: May 11, 1994.

Barry Felrice,

Associate Administrator for Rulemaking.

[FR Doc. 94–11920 Filed 5–16–94; 8:45 am]

BILLING CODE 4910–59–P

Notices

Federal Register
Vol. 59, No. 94
Tuesday, May 17, 1994

This section of the FEDERAL REGISTER contains documents other than rules or proposed rules that are applicable to the public. Notices of hearings and investigations, committee meetings, agency decisions and rulings, delegations of authority, filing of petitions and applications and agency statements of organization and functions are examples of documents appearing in this section.

DEPARTMENT OF AGRICULTURE

Agricultural Research Service

Notice of Availability for Licensing and Intent To Grant Exclusive License

AGENCY: Agricultural Research Service, USDA.

ACTION: Notice of availability and intent.

SUMMARY: Notice is hereby given that the U.S. Patent Application Serial No. 08/088,470, "Inhibition of Postharvest Fruit Decay by 2-Nonanone," filed July 7, 1993, is available for licensing and that the U.S. Department of Agriculture, Agricultural Research Service, intends to grant an exclusive license to Plant Sciences, Inc. of Watsonville, California.

DATES: Comments must be received no later than August 15, 1994.

ADDRESSES: Send comments to: USDA, ARS, Office of Technology Transfer, Room 401, Building 005, BARC–West, Baltimore Boulevard, Beltsville, Maryland 20705–2350.

FOR FURTHER INFORMATION CONTACT: June Blalock of the Office of Technology Transfer at the Beltsville address given above; telephone: 301–504–5989.

SUPPLEMENTARY INFORMATION: The Federal Government's patent rights to this invention are assigned to the United States of America, as represented by the Secretary of Agriculture. It is in the public interest to so license this invention for Plant Sciences, Inc. has submitted a complete and sufficient application for a license. The prospective exclusive license will be royalty-bearing and will comply with the terms and conditions of 35 U.S.C. 209 and 37 CFR 404.7. The prospective exclusive license may be granted unless, within ninety days from the date of this published Notice, the Agricultural Research Service receives written evidence and argument which establishes that the grant of the license would not be consistent with the requirements of 35 U.S.C. 209 and 37 CFR 404.7.

W.H. Tallent,

Assistant Administrator.

[FR Doc. 94–11942 Filed 5–16–94; 8:45 am]

BILLING CODE 3410–03–M

Notice of Intent To Grant an Exclusive Patent License

AGENCY: Agricultural Research Service, USDA.

ACTION: Notice of intent.

SUMMARY: Notice is hereby given that the U.S. Department of Agriculture, Agricultural Research Service, intends to grant to Urbana Laboratories of St. Joseph, Missouri, an exclusive domestic license for U.S. Patent No. 5,021,076, "Enhancement of Nitrogen Fixation with Bradyrhizobium Japonicum Mutants," granted June 4, 1991. Notice of Availability for licensing the invention was given in the **Federal Register** on May 31, 1989, and, also on July 25, 1991.

DATES: Comments must be received within 60 calendar days of the date of publication of this Notice in the **Federal Register**.

ADDRESSES: Send comments to: USDA–ARS–Office of Technology Transfer, Baltimore Boulevard, Building 005, room 419, BARC–W Beltsville, Maryland 20705–2350.

FOR FURTHER INFORMATION CONTACT: Willard J. Phelps of the Office of Technology Transfer at the Beltsville address given above; telephone 301–504–6532.

SUPPLEMENTARY INFORMATION: The Federal Government's patent rights to this invention are assigned to the United States of America, as represented by the Secretary of Agriculture. It is in the public interest to so license this invention as said company has submitted a complete and sufficient application for a license, promising therein to bring the benefits of said invention to the U.S. public.

The prospective exclusive license will be royalty-bearing, will comply with the terms and conditions of 35 U.S.C. 209 and 37 CFR 404.7. The prospective exclusive license may be granted unless, within sixty calendar days from the date of this published Notice, the Agricultural Research Service receives written evidence and argument which establishes that the grant of the license would not be consistent with the requirements of 35 U.S.C. 209 and 37 CFR 404.7.

W.H. Tallent,

Assistant Administrator.

[FR Doc. 94–11943 Filed 5–16–94; 8:45 am]

BILLING CODE 3410–03–M

Animal and Plant Health Inspection Service

[Docket No. 94–040–1]

Availability of Environmental Assessment and Finding of No Significant Impact

AGENCY: Animal and Plant Health Inspection Service, USDA.

ACTION: Notice.

SUMMARY: We are advising the public that an environmental assessment and finding of no significant impact have been prepared by the Animal and Plant Health Inspection Service relative to the issuance of a permit to allow the field testing of genetically engineered organisms. The environmental assessment provides a basis for our conclusion that the field testing of the genetically engineered organisms will not present a risk of introducing or disseminating a plant pest and will not have a significant impact on the quality of the human environment. Based on its findings of no significant impact, the Animal and Plant Health Inspection Service has determined that an environmental impact statement need not be prepared.

ADDRESSES: Copies of the environmental assessment and finding of no significant impact are available for public inspection at USDA, room 1141, South Building, 14th Street and Independence Avenue SW., Washington, DC, between 8 a.m. and 4:30 p.m., Monday through Friday, except holidays. Persons wishing to inspect those documents are requested to call ahead on (202) 690–2817 to facilitate entry into the reading room.

FOR FURTHER INFORMATION CONTACT: Dr. Arnold Foudin, Deputy Director, Biotechnology Permits, BBEP, APHIS, USDA, room 850, Federal Building, 6505 Belcrest Road, Hyattsville, MD 20782, (301) 436–7612. For copies of the environmental assessment and finding of no significant impact, write to Mr.

Clayton Givens at the same address. Please refer to the permit number listed below when ordering documents.

SUPPLEMENTARY INFORMATION: The regulations in 7 CFR part 340 (referred to below as the regulations) regulate the introduction (importation, interstate movement, and release into the environment) of genetically engineered organisms and products that are plant pests or that there is reason to believe are plant pests (regulated articles). A permit must be obtained before a regulated article may be introduced into the United States. The regulations set forth the procedures for obtaining a limited permit for the importation or interstate movement of a regulated article and for obtaining a permit for the release into the environment of a regulated article. The Animal and Plant Health Inspection Service (APHIS) has stated that it would prepare an environmental assessment and, when necessary, an environmental impact statement before issuing a permit for the release into the environment of a regulated article (see 52 FR 22906).

In the course of reviewing each permit application, APHIS assessed the impact on the environment that releasing the organisms under the conditions described in the permit application would have. APHIS has issued a permit for the field testing of the organisms listed below after concluding that the organisms will not present a risk of plant pest introduction or dissemination and will not have a significant impact on the quality of the human environment. The environmental assessment and finding of no significant impact, which are based on data submitted by the applicant and on a review of other relevant literature, provide the public with documentation of APHIS' review and analysis of the environmental impact associated with conducting the field tests.

An environmental assessment and finding of no significant impact have been prepared by APHIS relative to the issuance of a permit to allow the field testing of the following genetically engineered organisms:

Permit No.	Permittee	Date issued	Organisms	Field test location
94–067–01, renewal of permit 91–077–1, issued on 06–18–91.	Harris Moran Seed Company	04–07–94	Melon plants genetically engineered to express resistance to cucumber mosaic virus.	California.

The environmental assessment and finding of no significant impact have been prepared in accordance with: (1) The National Environmental Policy Act of 1969 (NEPA)(42 U.S.C. 4321 et seq.), (2) Regulations of the Council on Environmental Quality for Implementing the Procedural Provisions of NEPA (40 CFR parts 1500–1508), (3) USDA Regulations Implementing NEPA (7 CFR part 1b), and (4) APHIS Guidelines Implementing NEPA (44 FR 50381–50384, August 28, 1979, and 44 FR 51272–51274, August 31, 1979).

Done in Washington, DC, this 10th day of May 1994.

Lonnie J. King,

Acting Administrator, Animal and Plant Health Inspection Service.

[FR Doc. 94–11940 Filed 5–16–94; 8:45 am]

BILLING CODE 3410–34–P

[Docket No. 94–039–1]

Availability of Environmental Assessment and Finding of No Significant Impact for the Mexican Fruit Fly Regulatory Control Program

AGENCY: Animal and Plant Health Inspection Service, USDA.

ACTION: Notice.

SUMMARY: We are advising the public that the Animal and Plant Health Inspection Service has prepared an environmental assessment and a finding of no significant impact for a regulatory control program for Mexican fruit fly in the lower Rio Grande Valley of Texas. The environmental assessment provides a basis for our conclusion that the methods employed to control the plant pest will not have a significant impact on the environment.

ADDRESSES: Copies of the environmental assessment and finding of no significant impact are available for public inspection at USDA, room 1141, South Building, 14th Street and Independence Avenue SW., Washington, DC, between 8 a.m. and 4:30 p.m., Monday through Friday, except holidays. In addition, copies of the environmental assessment and finding of no significant impact may be obtained upon request from:

(1) Charles H. Bare, Senior Operations Officer, Plant Protection and Quarantine, APHIS, USDA, room 643, Federal Building, 6505 Belcrest Road, Hyattsville, MD 20782, (301) 436–8247;

(2) Director, Central Regional Office, Plant Protection and Quarantine, APHIS, USDA, 3505 Boca Chica Boulevard, suite 360, Brownsville, TX 78521–4065, (210) 504–4150; or

(3) Shashank Nilakhe, Director, Agri-Systems Programs, Texas Department of Agriculture, P.O. Box 12847, Austin, TX 78711, (502) 463–7643.

FOR FURTHER INFORMATION CONTACT: Mr. Mike Stefan, Operations Officer, Domestic and Emergency Operations, Plant Protection and Quarantine, APHIS, USDA, room 643, Federal Building, 6505 Belcrest Road, Hyattsville, MD 20782, (301) 436–8247.

SUPPLEMENTARY INFORMATION:

Background

In accordance with 7 U.S.C. 147a, 148, and 450, the Secretary of Agriculture is authorized to cooperate with the States and certain other organizations and individuals to control and eradicate plant pests.

The Mexican fruit fly, which is present in the Rio Grande Valley of Texas, is an exotic agricultural pest that attacks fruit such as citrus, mangoes, avocados, peaches, pears, and a wide variety of other fruits and vegetables. The short life cycle of the Mexican fruit fly allows rapid development of serious outbreaks that can cause severe economic losses in commercial citrus-producing areas.

The U.S. Department of Agriculture (USDA), in cooperation with the State of Texas, has developed a regulatory control program for the Mexican fruit fly in the Rio Grande Valley of Texas.

The Animal and Plant Health Inspection Service (APHIS), USDA, has prepared an environmental assessment to evaluate the effects of this regulatory control program on the environment. Based on the environmental assessment, APHIS has determined that the regulatory control program in Texas will not have a significant impact on the environment.

The environmental assessment and finding of no significant impact have been prepared in accordance with (1) The National Environmental Policy Act of 1969 (NEPA) (42 U.S.C. 4321 et seq.), (2) Regulations of the Council on Environmental Quality for Implementing NEPA (40 CFR parts 1500–1508), (3) USDA Regulations Implementing NEPA (7 CFR part 1b), and (4) APHIS Guidelines Implementing NEPA (44 FR 50381–50384, August 28, 1979, and 44 FR 51272–51274, August 31, 1979).

Done in Washington, DC, this 11th day of May 1994

Lonnie J. King,

Acting Administrator, Animal and Plant Health Inspection Service.

[FR Doc. 94–11939 Filed 5–16–94; 8:45 am]

BILLING CODE 3410–34–P

[Docket No. 94–041–1]

Availability of List of U.S. Veterinary Biological Product and Establishment Licenses and U.S. Veterinary Biological Product Permits Issued, Suspended, Revoked, or Terminated

AGENCY: Animal and Plant Health Inspection Service, USDA.

ACTION: Notice.

SUMMARY: This notice pertains to veterinary biological product and establishment licenses and veterinary biological product permits that were issued, suspended, revoked, or terminated by the Animal and Plant Health Inspection Service, during the month of March 1994. These actions have been taken in accordance with the regulations issued pursuant to the Virus-Serum-Toxin Act. The purpose of this notice is to inform interested persons of the availability of a list of these actions and advise interested persons that they may request to be placed on a mailing list to receive the list.

FOR FURTHER INFORMATION CONTACT: Ms. Maxine Kitto, Program Assistant, Veterinary Biologics, BBEP, APHIS, USDA, room 838, Federal Building, 6505 Belcrest Road, Hyattsville, MD 20782, (301) 436–8245. For a copy of this month's list, or to be placed on the mailing list, write to Ms. Kitto at the above address.

SUPPLEMENTARY INFORMATION: The regulations in 9 CFR part 102, "Licenses For Biological Products," require that every person who prepares certain biological products that are subject to the Virus-Serum-Toxin Act (21 U.S.C. 151 *et seq.*) shall hold an unexpired, unsuspended, and unrevoked U.S. Veterinary Biological Product License. The regulations set forth the procedures for applying for a license, the criteria for determining whether a license shall be issued, and the form of the license,

The regulations in 9 CFR part 102 also require that each person who prepares biological products that are subject to the Virus-Serum-Toxin Act (21 U.S.C. 151 *et seq.*) shall hold a U.S. Veterinary Biologics Establishment License. The regulations set forth the procedures for applying for a license, the criteria for determining whether a license shall be issued, and the form of the license,

The regulations in 9 CFR part 104, "Permits for Biological Products," require that each person importing biological products shall hold an unexpired, unsuspended, and unrevoked U.S. Veterinary Biological Product Permit. The regulations set forth the procedures for applying for a permit, the criteria for determining whether a permit shall be issued, and the form of the permit,

The regulations in 9 CFR parts 102 and 105 also contain provisions concerning the suspension, revocation, and termination of U.S. Veterinary Biological Product Licenses, U.S. Veterinary Biologics Establishment Licenses, and U.S. Veterinary Biological Product Permits,

Each month, the Veterinary Biologics section of Biotechnology, Biologics, and Environmental Protection prepares a list of licenses and permits that have been issued, suspended, revoked, or terminated. This notice announces the availability of the list for the month of March 1994. The monthly list is also mailed on a regular basis to interested persons. To be placed on the mailing list you may call or write the person designated under.

FOR FURTHER INFORMATION CONTACT:

Done in Washington, DC, this 11th day of May 1994.

Lonnie J. King,

Acting Administrator, Animal and Plant Health Inspection Services.

[FR Doc. 94–11941 Filed 5–16–94; 8:45 am]

BILLING CODE 3410–34–P

DEPARTMENT OF COMMERCE

Economics and Statistics Administration

Advisory Committee of the Task Force For Designing the Year 2000 Census and Census-Related Activities for 2000–2009

AGENCY: Economics and Statistics Administration, Department of Commerce.

ACTION: Notice of public meeting.

SUMMARY: Pursuant to the Federal Advisory Committee Act (Pub. L. 92–463, as amended by Pub. L. 94–409), we are giving notice of a meeting of the Advisory Committee of the Task Force For Designing the Year 2000 Census and Census-Related Activities for 2000–2009. The meeting will convene on Thursday, June 2, 1994, continuing through Friday, June 3, 1994, at the DuPont Plaza Hotel, 1500 New Hampshire Avenue, NW., Washington, DC. The Advisory Committee is composed of a Chairperson, twenty-five member organizations, and nine ex officio members, all appointed by the Secretary of Commerce. The Advisory Committee will consider the goals of the census and user needs for information provided by the census, and provide a perspective from the standpoint of the outside user community on how proposed designs for the year 2000 census realize those goals and satisfy those needs. The Advisory Committee shall consider all aspects of the conduct of the census of population and housing for the year 2000, and shall make recommendations for improving that census.

DATES: The meeting will begin at 1 p.m. on Thursday, June 2, 1994 and adjourn at 4:30 p.m. on Friday, June 3, 1994.

ADDRESSES: The meeting will take place at the DuPont Plaza Hotel, 1500 New Hampshire Avenue, NW., Washington, DC.

FOR FURTHER INFORMATION CONTACT: Persons wishing additional information regarding this meeting, or who wish to submit written statement or questions, may contact Thomas P. DeCair, Department of Commerce, Bureau of the Census, room 2066, Federal Building 3, Washington, DC 20233. Telephone: (301) 763–7298.

SUPPLEMENTARY INFORMATION: The agenda for the meeting includes discussion on cooperative ventures with state, local, and tribal governments; 1995 Census Test plans for outreach and promotion; and other items that the Chair and Advisory Committee members deem appropriate for this meeting.

The meeting is open to the public. A brief period will be set aside for public comment and questions. However, persons with extensive questions or statements for the record must submit them in writing to the Commerce Department official named above at least three working days prior to the meeting.

The meeting is physically accessible to people with disabilities. Requests for sign language interpretation or other auxiliary aids should be directed to Susan Knight on (301) 763–7298.

Dated: May 10, 1994

Paul A. London,

Acting Under Secretary for Economic Affairs Economics and Statistics Administration.

[FR Doc. 94–11964 Filed 5–16–94; 8:45 am]

BILLING CODE 3510–EA–M

International Trade Administration

[A-122-503]

Final Results of Antidumping Duty Administrative Review; Iron Construction Castings From Canada

AGENCY: International Trade Administration/Import Administration, Department of Commerce.

ACTION: Notice of Final Results of Antidumping Duty Administrative Review.

SUMMARY: On January 3, 1994, the Department of Commerce published in the **Federal Register** the preliminary results of an administrative review of the antidumping duty order on iron construction castings from Canada. The review covered 11 manufacturers and/or exporters of the subject merchandise to the United States during the period March 1, 1992, through February 28, 1993. Based on our analysis of comments received, the dumping margins for the original 11 companies have not changed from the margins presented in the preliminary results. However, we have found that three additional companies are related to respondents in this review and have assigned cash deposit rates to reflect this relationship.

EFFECTIVE DATE: May 17, 1994.

FOR FURTHER INFORMATION CONTACT: Lisa Raisner, Office of Antidumping Compliance, International Trade Administration, U.S. Department of Commerce, Washington, DC 20230, telephone: (202) 482-3518.

SUPPLEMENTARY INFORMATION:

Background

On January 3, 1994, the Department of Commerce (the Department) published in the **Federal Register** the preliminary results of an administrative review (59 FR 65) of the antidumping duty order on iron construction castings from Canada (51 FR 17220). The Department has now completed this administrative review in accordance with section 751 of the Tariff Act of 1930, as amended (the Tariff Act).

Scope of the Review

Imports covered by this review are shipments of certain iron construction castings from Canada, limited to manhole covers, rings, and frames, catch basin grates and frames, cleanout covers and frames used for drainage or access purposes for public utility, water, and sanitary systems, classifiable as heavy castings under Harmonized Tariff Schedule (HTS) item numbers 7325.10.0010 and 7325.10.0050 and to valve, service, and meter boxes which are placed below ground to encase water, gas, or other valves, or water and gas meters, classifiable as light castings under HTS item numbers 8306.29.0000 and 8310.00.0000. The HTS item numbers are provided for convenience and Customs purposes only. The written description remains dispositive.

This review covers sales of certain Canadian iron construction castings by Associated Foundry Ltd., Bibby Foundry Ltd., Bibby Waterworks Inc., Dobney Foundry Ltd., Bibby St. Croix, LaPerle Foundry Division (LaPerle), McCoy Foundry Company, Penticton Foundry Ltd., Titan Foundry Ltd., Titan Supply Ltd., and Trojan Industries, Inc., during the period March 1, 1992, through February 28, 1993. In addition, based on our analysis, we have found that three other companies, for which we did not initiate an administrative review, are related to respondents in this review and have, therefore, been assigned cash deposit rates to reflect this relationship.

Clerical Error

The first-tier BIA rate used in the notice of preliminary results of review was listed as 9.9 percent. We have corrected this error for the final results and have used the rate of 9.8 percent as listed in Iron Construction Castings from Canada; Amendment to Final Determination of Sales at Less than Fair Value and Amendment to Antidumping Duty Order (51 FR 34110, September 25, 1986). We have also corrected references to this rate in all comments addressed below.

Analysis of Comments Received

We gave interested parties an opportunity to comment on the preliminary results. We received written comments and rebuttal briefs from the Municipal Castings Fair Trade Council and its individually-named members (petitioner) and LaPerle.

Comments Regarding the Collapsing of Related Parties

Comment 1: Petitioner supports the Department's analysis of the relationship between LaPerle and other respondents in this review and its use of the methodology outlined in the preliminary results, most recently upheld in *Nihon Cement Co., Ltd., et al.* v *United States, et al.*, Slip Op. 93-80 (May 25, 1993), and argues that the Department properly determined that LaPerle is related to other respondents in this review.

LaPerle argues that the Department improperly determined that LaPerle's response should be collapsed with responses of other entities. Although it does not dispute the fact that it is related to the other companies listed by the petitioner, LaPerle maintains that it is an autonomous operation and further asserts that each of the related companies covered by this review also operated as distinct and separate entities during the period of review.

LaPerle also maintains that the decision to collapse in this administrative review directly contradicts the Department's decision in an earlier review not to require Bibby Ste-Croix to submit information regarding sales of castings produced by Laperle because the two companies operated as separate entities (see Iron Construction Castings from Canada, 55 FR 460, January 5, 1990).

Department's Position: During the questionnaire process, LaPerle provided no evidence to demonstrate that it was an independent entity. In fact, analysis of the information provided by LaPerle proved the contrary. Further, LaPerle's comment does not cite to any relevant factual information on record, other than the geographical distance between several of the components and specific product-line differences, in support of its claim that LaPerle and each of its related parties were autonomous.

In this review, we received only one questionnaire response, and that was from LaPerle. Based on our analysis of this response, for the preliminary results we determined that LaPerle was related to other respondents in this review. In doing so, we determined that LaPerle and its related entities met all five criteria, in addition to ownership, that the Department considers in determining whether to collapse related parties, as laid out in the preliminary results and in Certain Granite Products from Spain, 53 FR 24335, 1988; Certain Granite Products from Italy, 53 FR 27187, 1988; Steel Wheels from Brazil, 54 FR 8780, 1989; Cellular Mobile Telephones and Subassemblies from Japan, 54 FR 48011, 1989; and Final Determinations of Sales at Less Than Fair Value: Certain Hot-Rolled Carbon Steel Flat Products, Certain Cold-Rolled Carbon Steel Flat Products, Certain Corrosion-Resistant Carbon Steel Flat Products, and Certain Cut-to-Length Carbon Steel Plate from Canada, 58 FR 37099 (July 9, 1993). The five criteria, in addition to ownership, are as follows:

- Interlocking boards of directors
- Similar production processes, facilities or equipment so as to facilitate shifting of production between facilities
- Do not operate as separate and distinct entities
- Share of marketing and sales information or offices

• Involvement in the pricing or production decisions of the other entity

In response to LaPerle's claim that we are contradicting our earlier decision, we have determined that the record of this review differs substantially from that of the previous review in the amount of information we requested and the level of inter-relatedness which the information in this review shows. We consider these relationships to be sufficient to allow for price manipulation and involvement in pricing and/or production decisions (see analysis and decision memoranda for preliminary results). Therefore, we properly determined that LaPerle is related to, and should be collapsed with, other respondents in this review.

Comment 2: The petitioner asserts that the Department should also collapse Grand Mere with LaPerle for these final results because public information on the record of this review indicates that Grand Mere is related to LaPerle.

LaPerle responds that the Department should not collapse Grand Mere or any other related party with LaPerle for this review. LaPerle further argues that petitioner's attempt to collapse a non-reviewed firm with LaPerle in this review is untimely.

Department's Position: Based on our criteria, as listed above, the information on the record indicates that three other companies, in addition to those included in the notice of initiation of administrative review, are sufficiently related to be collapsed with LaPerle and will be included in this administrative review for purposes of future entries and cash deposit rates. (For more information, see the analysis memorandum for these final results.) Therefore, we will instruct Customs to require cash deposits and assess estimated antidumping duties in the amount of the rate assigned to the entire entity.

The issue of timeliness is not relevant in this instance because we are treating LaPerle and all its related companies as a single entity. Therefore, in effect, we are now reviewing one single company, comprised of various individual components, including LaPerle. The fact that three of these individual components were not included in the notice of initiation of this review is immaterial because we are treating the various components as one entity.

Comment Regarding the Use of Best Information Available

Comment 3: Petitioner contends that despite the numerous opportunities LaPerle was given to submit information to the Department in support of its claim of being autonomous, the information LaPerle submitted only indicated the contrary. Further, because it failed to consolidate all information for itself, as outlined in the Department's questionnaire, LaPerle's questionnaire response and additional submissions do not constitute cooperation.

Therefore, the petitioner maintains that the Department properly determined that LaPerle significantly impeded the proceedings and correctly applied first-tier best information available (BIA) in this review. The petitioner argues, however, that the BIA rate should be higher than the BIA rate used for the preliminary results in order to encourage compliance in future administrative reviews. The petitioner further suggests the possibility that, following the Department's two-tiered methodology, the respondents in this case could have predicted the worst-case outcome of the administrative review.

The petitioner argues that the Department's selection of 9.8 percent applied as BIA in the preliminary results is not significantly greater than the rates that currently apply and therefore will not encourage future compliance. As such, the Department would be justified in departing from its normal BIA methodology by selecting a higher rate. The petitioner points out that the courts have held that the Department is not required to choose a rate that is precisely accurate but instead is to choose a rate that is "usable", citing *Allied-Signal Aerospace Co.* v. *United States*, 13 CIT 13, 28, 704 F.Supp. 1114, 1126 (1989), *appeal after remand*, 13 CIT 526, 717 F.Supp. 834 (1989), *aff'd*, 901 F.2d 1089 (Fed. Cir. 1990), *cert.denied sub nom*, and *Floramerica, S.A.* v. United States, 498 U.S. 848 (1990). Petitioner also points out that the Department has departed from its two-tiered approach when necessary in *Cold-Rolled Stainless Steel Sheet from Germany; Final Results of Antidumping Duty Administrative Review*, (59 FR 15888, April 5, 1994), *aff'd Krupp Stahl A.G.* v. *United States*, 822 F.Supp. 789 (CIT 1993). Accordingly, the petitioner argues the Department should apply the higher rate of 33.46 percent, which is the rate determined for a respondent in the preliminary results of the 1985–1987 administrative review of the subject merchandise (*Iron Construction Castings from Canada*, 56 FR 274, May 21, 1991), as BIA.

LaPerle states that the Department should not have resorted to BIA, particularly punitive BIA, for purposes of its preliminary results because LaPerle fully cooperated with the Department in every respect, responded to all requests for information, and was preparing for verification. LaPerle argues that, if the Department still deems use of BIA is necessary for the final results, the Department should use the second-tier rate.

LaPerle argues that petitioner's reference to Allied-Signal, while it does lend support to the Department's use of 9.8 percent as BIA, does not offer a precedent for use of a preliminary results margin rate. LaPerle further argues petitioner's cite to Krupp Stahl is also misleading because the factual situation in this administrative review is distinctly different. In addition, in Krupp Stahl, the respondent was clearly uncooperative and impeded the proceeding by failing to respond to a new questionnaire and destroying the records necessary to verify the adequacy of the information submitted in the earlier response.

LaPerle also refutes petitioner's allegation that it could have predicted the worst-case outcome of the administrative review, suggesting it would have been more efficient, in that case, to refuse to respond to any requests for information. Finally, LaPerle argues that the 9.8 percent rate used by the Department in its preliminary results is highly punitive in comparison to LaPerle's existing cash deposit rate of 3.16 percent from the most recent final results of administrative review.

Department's Position: While LaPerle provided information during the review, our analysis of information on the record indicated that LaPerle was not independent, but was, in fact, one of many components of a single entity. Therefore, the single entity, comprised of many components including LaPerle, became, in effect, the respondent in this review.

In Allied-Signal, the Court affirmed our two-tiered BIA methodology, noting that

> Whether the first or second tier properly applies to a nonresponsive respondent essentially turns on the level of cooperation exhibited by the respondent during the review. In order to apply the first tier to a particular respondent, the ITA must conclude that the respondent "refused to cooperate with the [ITA] or otherwise significantly impeded" the review.

(See Allied-Signal, p.15.) Once the Department determined that the related parties in this case must be collapsed, LaPerle was given the opportunity, through two supplemental questionnaires, to supply the additional data. However, LaPerle failed to provide complete information on the related

parties. The other named respondents, who were also collapsed with LaPerle, did not respond. Therefore, only a small fraction of the required information was provided while a significant quantity remained unreported. Accordingly, the application of first-tier BIA is appropriate because LaPerle impeded the proceeding by failing to give the Department the information necessary to conduct the review and by failing to provide any support for its position that LaPerle was independent.

Finally, we believe the 9.8 percent rate we have chosen is consistent with a first-tier BIA approach. The 33.46 percent rate suggested by the petitioner was from a notice of preliminary results. Because the factual situation in this administrative review differs from that in Krupp Stahl, we do not consider this rate appropriate to be used for these final results. In Krupp Stahl, because it was the first administrative review, the only rates available for BIA were from the preliminary and final results of the less-than-fair-value (LTFV) investigation. In order to assign a rate higher than the calculated rate that Krupp had received in the LTFV investigation, where Krupp had cooperated, the Department had no choice but to resort to the preliminary results; otherwise, Krupp would have been in a better position as a result of its noncompliance (see Krupp Stahl at 793) than if it had responded to the Department's questionnaire. However, in this case, we do have other final rates available and appropriate for BIA.

Because the 9.8 percent BIA rate we have chosen is higher than any individual rate that currently applies to LaPerle and its related entities, we believe that the rate is adverse and will achieve the objective of encouraging complete responses in future reviews. Therefore, we believe that the 9.8 percent rate chosen is both appropriate and consistent with a first-tier BIA rate approach.

Comment 4: The petitioner argues that, apart from impeding the proceeding in connection with the respondents' business relationships, additional grounds exist for the Department to apply BIA: inconsistent product codes; incorrect model match methodology; incorrect dates of sales; and missing information regarding COP data, product matches, difference-in-merchandise (difmer) adjustments, level of trade information, and general and administrative expenses in COP incurred on behalf of LaPerle by its related companies.

LaPerle counters that its response is not grossly deficient: COP data, product concordance, and difmer adjustments were provided; LaPerle maintains that its model match methodology is correct and its level-of-trade information and dates of sale are appropriate; and, finally, because its operations were independent of the other companies, LaPerle thought it inappropriate to include general and administrative costs for these entities in its COP (and thought that even if it were appropriate, some of LaPerle's expenses would have to be allocated to those entities).

Department's Position: Because LaPerle failed to submit a consolidated response, the information provided was inadequate for purposes of our analysis. Therefore, the issue of deficiencies in what information was, in fact, submitted is moot.

Final Results of the Review

After analysis of the comments received, we determine that the following weighted-average margins exist, and have been applied based on relationship and/or failure to respond, for the period March 1, 1992 through February 28, 1993:

Manufacturer/exporter	Percent margin
Associated Foundry Ltd	9.8
Bibby Foundry Ltd	9.8
Bibby Waterworks Inc	9.8
Dobney Foundry Ltd	9.8
Bibby St. Croix (to include: Bibby Ste-Croix Founderies, Inc. and Bibby Ste-Croix Division)	9.8
LaPerle Foundry, Inc	9.8
McCoy Foundry Company	*7.5
Penticton Foundry Ltd	9.8
Titan Foundry Ltd	9.8
Titan Supply Ltd	9.8
Trojan Industries, Inc	9.8

*No shipments during the period; since there was no prior review of this company, we assigned the all other rate from the less-than-fair-value (LTFV) investigation.

The Department shall determine, and the Customs Service shall assess, antidumping duties on all appropriate entries. The Department will issue appraisement instructions on each exporter directly to the Customs Service. We will also instruct Customs to collect cash deposits for the three additional companies, which were collapsed with LaPerle for purposes of these final results, at the rate assigned to LaPerle.

Furthermore, the following deposit requirements will be effective, upon publication of this notice of final results of administrative review, for all shipments of the subject merchandise from Canada that are entered, or withdrawn from warehouse, for consumption on or after the publication date of this notice, as provided by section 751(a)(1) of the Tariff Act: (1) The cash deposit rates for the reviewed companies will be those rates outlined above; (2) for previously reviewed or investigated companies not listed above, the cash deposit rate will continue to be their company-specific rate published for the most recent period; (3) if the exporter is not a firm covered in this review or the original investigation, but the manufacturer is, the cash deposit rate will be the rate established for the most recent period for the manufacturer of the merchandise; and (4) if neither the exporter nor the manufacturer is a firm covered in this or any previous review, the cash deposit rate will be 7.5 percent, which is the "all other" rate established in the LTFV investigation, as discussed below.

On May 25, 1993, the Court of International Trade (CIT), in *Floral Trade Council* v. *United States*, Slip Op. 93–79, and *Federal-Mogul Corporation and the Torrington Company* v. *United States*, Slip Op. 93–83, decided that once an "all others" rate is established for a company, it can only be changed through an administrative review. The Department has determined that in order to implement these decisions, it is appropriate to reinstate the "all others" rate from the LTFV investigation (or that rate as amended for correction of clerical errors or as a result of litigation) in proceedings governed by antidumping duty orders.

This notice serves as a final reminder to importers of their responsibility under 19 CFR 353.26 to file a certificate regarding the reimbursement of antidumping duties prior to liquidation of the relevant entries during this review period. Failure to comply with this requirement could result in the Secretary's presumption that reimbursement of antidumping duties occurred and the subsequent assessment of double antidumping duties.

This notice also serves as the only reminder to parties subject to administrative protective order (APO) of their responsibility concerning the disposition of proprietary information disclosed under APO in accordance with 19 CFR 353.34(d). Timely written notification of return/destruction of APO materials or conversion to judicial protective order is hereby requested. Failure to comply with the regulations and the terms of the APO is a sanctionable violation.

This administrative review and notice are in accordance with section 751(a)(1) of the Tariff Act (19 U.S.C. 1675(a)(1)) and 19 CFR 353.22.

Dated: May 9, 1994.

Susan G. Esserman,

Assistant Secretary for Import Administration.

[FR Doc. 94–11968 Filed 5–16–94; 8:45 am]

BILLING CODE 3510–DS–P

A–447–801 (Formerly A–461–601)

Solid Urea From Estonia; Final Results of Antidumping Duty Administrative Review

AGENCY: International Trade Administration/Import Administration, Department of Commerce.

ACTION: Notice of final results of antidumping duty administrative review.

SUMMARY: On February 23, 1994, the Department of Commerce published the joint notice of initiation of antidumping duty administrative review and notice of preliminary results of antidumping duty administrative review of the antidumping duty order on solid urea from Estonia. The review covers exports of the subject merchandise to the United States from Estonia during the period July 1, 1991, through June 30, 1992.

We gave interested parties an opportunity to comment on the preliminary results. No comments were received from interested parties. Therefore, the final results remain unchanged from the preliminary results.

EFFECTIVE DATE: (May 17, 1994.)

FOR FURTHER INFORMATION CONTACT: Thomas O. Barlow or Wendy Frankel, Office of Antidumping Compliance, International Trade Administration, U.S. Department of Commerce, Washington, DC 20230; telephone: (202) 482–5256 and 482–5253, respectively.

SUPPLEMENTARY INFORMATION:

Background

On July 14, 1987, the Department of Commerce (the Department) published in the **Federal Register** (52 FR 26367) an antidumping duty order on solid urea from the Union of Soviet Socialist Republics (USSR) (52 FR 19557 (May 26, 1987)). On June 29, 1992, following dissolution of the USSR, the Department transferred the order to the Commonwealth of Independent States and the Baltic States, including Estonia. The substance of each new order remained the same and the estimated cash deposit rate of 68.26 percent was applied to exports from each independent state (57 FR 28828 (June 29, 1992)).

On July 31, 1992, in accordance with 19 CFR 353.22(a), the Department received a timely request from the Government of Estonia for an administrative review of the order for the time period July 1, 1991, through June 30, 1992. On August 10, 1992, the Department requested the U.S. Customs Service (Customs) to determine whether there was any record of entries of subject merchandise from the former USSR or any of the 15 independent republics during the review period. On August 13, 1992, Customs advised the Department that there was no record of any entries of the subject merchandise under HTS item 3102.10.00 during the period July 1, 1991, to June 30, 1992, from the former USSR or any of the 15 independent republics.

On February 23, 1994, the Department published the joint notice of initiation of antidumping duty administrative review and notice of preliminary results of antidumping duty administrative review of the antidumping duty order on solid urea from Estonia (59 FR 8600). In that notice, because there were no entries of the subject merchandise into the United States during the period of review, the cash deposit rate for all firms was maintained at the present rate of 68.26 percent. This rate is the applicable rate transferred to the Republic of Estonia on June 29, 1992.

The Department has now completed this administrative review in accordance with section 751 of the Tariff Act of 1930, as amended (the Act).

Scope of Review

Imports covered by this review are all shipments of solid urea from Estonia. During the original investigation such merchandise was provided for under item number 480.30 of the Tariff Schedules of the United States (TSUS). This merchandise is currently classifiable under item number 3102.10.00 of the Harmonized Tariff Schedule (HTS) of the United States. HTS item numbers are provided for convenience and Customs purposes. The written description remains dispositive as to the scope of the product coverage.

The period of review is July 1, 1991, through June 30, 1992.

Final Results of Review

We have not changed the final results from those presented in the preliminary results of review.

The following deposit requirements will be effective for all shipments of the subject merchandise entered, or withdrawn from warehouse, for consumption on or after the publication date of these final results of this administrative review, as provided by section 751(a)(1) of the Act: The cash deposit rate for entries of solid urea from Estonia for all firms will be 68.26 percent.

These deposit requirements shall remain in effect until publication of the final results of the next administrative review.

This administrative review and notice are in accordance with section 751(a)(1) of the Act, as amended (19 U.S.C. 1675(a)(1)), and 19 CFR 353.22 (1993).

Dated: May 3, 1994.

Paul L. Joffe,

Deputy Assistant Secretary for Import Administration.

[FR Doc. 94–11967 Filed 5–16–94; 8:45 am]

BILLING CODE 3510–DS–P

[A–580–806]

Sweaters Wholly or in Chief Weight of Man-Made Fiber From Korea; Preliminary Results of Antidumping Duty Administrative Review

AGENCY: International Trade Administration/Import Administration, Department of Commerce.

ACTION: Notice of Preliminary Results of Antidumping Duty Administrative Review.

SUMMARY: In response to a request by members of the domestic industry, the Department of Commerce is conducting an administrative review of the antidumping duty order on sweaters wholly or in chief weight of man-made fiber from Korea. The review covers six manufacturers/exporters of this merchandise to the United States and the period September 1, 1991 through August 31, 1992. As a result of this review, we have preliminarily determined to assess antidumping duties equal to the difference between United States price and foreign market value.

Interested parties are invited to comment on these preliminary results.

EFFECTIVE DATE: May 17, 1994.

FOR FURTHER INFORMATION CONTACT: Rebecca Collins, Nooshen Amiri, Donald Little, or G. Leon McNeill, Office of Antidumping Compliance, International Trade Administration, U.S. Department of Commerce, 14th Street and Constitution Avenue, NW., Washington, DC 20230; telephone: (202) 482–4733.

SUPPLEMENTARY INFORMATION:

Background

On September 24, 1990, the Department of Commerce (the Department) published in the **Federal Register** (55 FR 39036) the antidumping duty order on sweaters wholly or in

chief weight of man-made fiber (MMF sweaters) from Korea. On September 30, 1992, the petitioner, the National Knitwear & Sportswear Association, and the Emergency Ad Hoc Committee of Man-Made Fiber Sweater Producers and its individual member producers, requested that we conduct an administrative review, in accordance with 19 CFR 353.22(a). We published the notice of initiation of the antidumping duty administrative review on October 22, 1992 (57 FR 48201), covering the period September 1, 1991 through August 31, 1992. The Department has now conducted the review in accordance with section 751 of the Tariff Act of 1930, as amended (the Tariff Act).

Scope of the Review

Imports covered by this review are shipments of MMF sweaters from Korea. MMF sweaters are defined as garments for outerwear that are knitted or crocheted, in a variety of forms including jacket, vest, cardigan with button or zipper front, or pullover, usually having ribbing around the neck, bottom, and cuffs on the sleeves (if any), encompassing garments of various lengths, wholly or in chief weight of man-made fiber. The term "in chief weight of man-made fiber" includes sweaters where the man-made fiber material predominates by weight over each other single textile material. This term excludes sweaters 23 percent or more by weight of wool. It includes men's, women's, boys', or girls' sweaters, as defined above, but does not include sweaters for infants 24 months of age or younger. It includes all sweaters as defined above, regardless of the number of stitches per centimeter, provided that, with regard to sweaters having more than nine stitches per two linear centimeters horizontally, it includes only those with a knit-on rib at the bottom.

Garments which extend below mid-thigh or cardigans that contain a sherpa lining or heavy-weight fiberfill lining, including quilted linings, used to provide extra warmth to the wearer, are not considered sweaters and are excluded from the scope of the review. Also specifically excluded from the scope are sweaters assembled in Guam that are produced from knit-to-shape component parts knit in and imported from Korea and entering under Harmonized Tariff Schedule (HTS) item number 9902.61.

The subject merchandise is currently classifiable under HTS item numbers 6110.30.30.10, 6110.30.30.15, 6110.30.30.20, 6110.30.30.25, 6103.23.00.70, 6103.29.10.40, 6103.29.20.62, 6104.23.00.40, 6104.29.10.60, 6104.29.20.60, 6110.30.10.10, 6110.30.10.20, 6110.30.20.10, and 6110.30.20.20. This merchandise may also enter under HTS item numbers 6110.30.30.50 and 6110.30.30.55. The HTS item numbers are provided for convenience and Customs purposes only. The written description remains dispositive.

This review covers six manufacturers/exporters of the subject merchandise from Korea, Chunji Industrial Company, Ltd. and its related company, Sungwha Garment Company, Ltd. (collectively, Chunji), Hanil Synthetic Fiber Industrial Company, Ltd. (Hanil), Jo Woo Company Ltd. (Jo Woo), Shinwon Corporation (Shinwon), Young Woo & Company, Ltd. (Young Woo), and Yurim Company, Ltd. (Yurim), and the period September 1, 1991 through August 31, 1992.

United States Price

The Department used purchase price (PP), as defined in section 772 of the Tariff Act, in calculating United States price (U.S. price). PP was based on the packed, f.o.b. price to the first unrelated purchasers in the United States. We made deductions, where appropriate, for foreign inland freight, foreign brokerage and handling, U.S. duty, marine insurance, demurrage, wharfage, and containerization charges. We also made an addition for import duties which were rebated on imported materials used to produce subsequently exported merchandise.

No other adjustments were claimed or allowed.

Hanil, Jo Woo, Shinwon and Young Woo did not include their U.S. sample sales and resales in their U.S. sales databases, nor did they include expense and cost data for these sample sales and resales. For these U.S. sales, we have used the best information available (BIA). Since record evidence does not support the proposition that it would have been impossible for each company to report expense and cost data for these sales, we have used an uncooperative rate as BIA. The uncooperative rate used is (1) the highest of the rates found for any firm in the less-than-fair-value (LTFV) investigation or in prior administrative reviews, or (2) the highest rate found in this review for any firm. See Final Results of Antidumping Duty Administrative Reviews and Revocation in Part of an Antidumping Duty Order; Antifriction Bearings (Other Than Tapered Roller Bearings) and Parts Thereof from France, Germany, Italy, Japan, Romania, Singapore, Sweden, Thailand and the United Kingdom (59 FR 39729, July 26, 1993).

Foreign Market Value

In order to determine whether there were sufficient sales of MMF sweaters in the home market to serve as a viable basis for calculating foreign market value (FMV), we compared the volume of home market sales to the volume of third country sales in accordance with section 773(a)(1)(B) of the Tariff Act. All respondents had insufficient home market sales of the subject merchandise during the period of review. Therefore, in accordance with 19 CFR 353.48(a), we used third-country sales or constructed value (CV) as the basis for calculating FMV.

During the LTFV investigation and the first administrative review of this case, the Department found that Chunji, Hanil, Shinwon, Young Woo, and Yurim had made third-country sales of subject merchandise at prices which were below the cost of production. Accordingly, for this review, we initiated an investigation of possible third-country sales below the cost of production for these companies.

As a result of our investigations, we found below-cost sales for Chunji, Hanil, Shinwon, Young Woo, and Yurim. When between 10 and 90 percent of the sales of a particular model were determined to be below the cost of production, and below-cost sales were made over an extended period of time, we excluded those sales from our calculation of FMV. When more than 90 percent of the sales of a particular model were made below cost and below-cost sales were made over an extended period of time, we excluded all sales of that model from our calculation of FMV. When less than 10 percent of the home market sales of a particular model were made at prices below the cost of production, we did not disregard any sales of that model.

To determine if sales below cost had been made over an extended period of time, we compared the number of months in which sales below cost had occurred for a particular model to the number of months in which the model was sold. If the model was sold in three or fewer months, we did not find that below-cost sales were made over an extended period of time unless there were sales below cost of that model in each month. If a model was sold in more than three months, we did not find that below-cost sales were made over an extended period of time unless there were sales below cost in at least three of the months in which the model was sold.

Since none of the respondents has submitted information indicating that any of its sales below cost were at prices

which would have permitted "recovery of all costs within a reasonable period of time in the normal course of trade," within the meaning of section 773(b)(2) of the Tariff Act, we were unable to conclude that the costs of production of such sales were recovered within a reasonable period. As a result, we disregarded below-cost sales when the conditions as described above were met.

In determining such or most similar merchandise for these preliminary results, when there was more than one equally similar model, in accordance with our model matching criteria as set out in Appendix V of our questionnaire, we used the pool of equally similar third-country models, as long as the costs of those models were within 20 percent of the cost of the U.S. model. When there was more than one equally similar above-cost model, we adjusted the FMV of each model for differences in merchandise, and then weight averaged the results. If any of these models were found to be below cost, we excluded them from our analysis and used only the above-cost models. If there were not sufficient sales of such or most similar merchandise made at or above the cost of production, we used CV for calculating FMV.

Third-country price was based on the packed, f.o.b., c.i.f., or C&F price to the first unrelated purchaser. We made adjustments, where applicable, to the third-country price for foreign inland freight, foreign brokerage and handling, bank charges, quota and Customs clearance fee, wharfage and containerization, ocean freight, marine insurance, credit expenses, warranties, commissions, differences in the physical characteristics of the merchandise, and differences in packing. We also added an amount for import duties which were rebated on imported materials used to produce subsequently exported merchandise. Since FMV was compared to PP, we added U.S. credit, warranties, and commissions to FMV, as appropriate. When commissions were paid on either the PP sale or the third-country sale but not on the other, we made an adjustment to FMV for indirect selling expenses in the one market to offset the commissions in the other market. *See* 19 CFR 353.56(b). That is, when there was a commission on the PP sale but not on the third-country sale, we added the U.S. commission to FMV, and subtracted third-country indirect selling expenses from FMV, up to the amount of the U.S. commission. When there was a commission on the third-country sale but not on the PP sale, we subtracted the third-country commission from FMV, and added U.S. indirect selling expenses to FMV, up to the amount of the third-country commission. When commissions were paid in both markets, we deducted the third-country commissions from FMV and added the U.S. commissions to FMV.

CV includes materials, fabrication, general expenses, profit, and packing. We used: (1) Actual general expenses or the statutory minimum of 10 percent of materials and fabrication, whichever was greater; (2) actual profit or the statutory minimum of 8 percent of materials and fabrication costs and general expenses, whichever was greater; and (3) packing costs for merchandise exported to the United States. Where appropriate, we made adjustments for differences in circumstances of sale, in accordance with 19 CFR 353.56.

No other adjustments were claimed or allowed.

Hanil and Yurim did not provide cost of production data for third-country models sold as sample sales or as resales. In these instances, we excluded the third-country model from the cost-of-production test, and, therefore, from the pool of third-country sales used to calculate FMV. If a third-country model sold as a sample sale or a resale for which cost of production data were not reported was selected as the only most similar model for a U.S. model, we used CV as the basis of FMV.

Chunji and Yurim included in their U.S. sales databases data on their U.S. sample sales and resales and selected the most similar third-country merchandise for these models, but did not provide CV data for these U.S. models. Therefore, when there were no sales of such or most similar merchandise made at or above the cost of production, or such or most similar merchandise could not be found, the Department had no data to use as the basis of FMV. For these U.S. sample sales and resales, the Department used BIA. As BIA, we used an uncooperative rate, as described above, since record evidence does not support the proposition that it would have been impossible to provide these data.

Preliminary Results of Review

As a result of our review, we preliminarily determine that the following margins exist:

Manufacturer/exporter	Period of review	Margin (percent)
Chunji Industrial Company, Ltd and Sungwha Garment Company, Ltd	09/01/91–08/31/92	2.75
Hanil Synthetic Fiber Ind. Co., Ltd	09/01/91–08/31/92	2.51
Jo Woo Company, Ltd	09/01/91–08/31/92	4.12
Shinwon Corporation	09/01/91–08/31/92	2.06
Young Woo & Company, Ltd	09/01/91–08/31/92	4.88
Yurim Company, Ltd	09/01/91–08/31/92	4.10

Parties to the proceeding may request disclosure within 5 days of the date of publication of this notice. Any interested party may request a hearing within 10 days of publication. Any hearing, if requested, will be held 44 days after the date of publication of this notice, or the first workday thereafter. Interested parties may submit case briefs within 30 days of the date of publication of this notice. Rebuttal briefs, which must be limited to issues raised in the case briefs, may be filed not later than 37 days after the date of publication. See 19 CFR 353.38. The Department will publish a notice of final results of this administrative review, which will include the results of its analysis of issues raised in any such comments.

The Department shall determine, and the Customs Service shall assess, antidumping duties on all appropriate entries. Individual differences between U.S. price and FMV may vary from the percentages stated above. The Department will issue appraisement instructions on each exporter directly to the Customs Service.

Furthermore, the following deposit requirements will be effective upon publication of the final results of this administrative review for all shipments of MMF sweaters from Korea entered, or withdrawn from warehouse, for consumption on or after the publication date, as provided by section 751(a)(1) of the Tariff Act: (1) The cash deposit rates for the reviewed companies will be those established in the final results of this administrative review; (2) for previously reviewed or investigated companies not listed above, the cash

deposit rate will continue to be the company-specific rate published for the most recent period; (3) if the exporter is not a firm covered in this review or the LTFV investigation, but the manufacturer is, the cash deposit rate will be the rate established for the most recent period for the manufacturer of the merchandise; and (4) the cash deposit rate for all other manufacturers or exporters will be the "all others" rate established in the final notice of LTFV investigation of this case, in accordance with the Court of International Trade's decisions in *Floral Trade Council* v. *United States*, 822 F.Supp. 766 (1993), and *Federal-Mogul Corporation and the Torrington Company* v. *United States*, 39 F.Supp. 864 (1993). The all others rate is 1.30 percent. These deposit requirements, when imposed, shall remain in effect until publication of the final results of the next administrative review.

Notification of Interested Parties

This notice serves as a preliminary reminder to importers of their responsibility under 19 CFR 353.26 to file a certificate regarding the reimbursement of antidumping duties prior to liquidation of the relevant entries during this review period. Failure to comply with this requirement could result in the Secretary's presumption that reimbursement of antidumping duties occurred and subsequent assessment of double antidumping duties.

This notice also serves as a reminder to parties subject to administrative protective orders (APOs) of their responsibility concerning the return or destruction of proprietary information disclosed under APO in accordance with 19 CFR 353.34(d). Timely written notification of the return/destruction of APO materials or conversion to judicial protective order is hereby requested. Failure to comply with the regulations and the terms of an APO is a sanctionable violation.

This administrative review and notice are in accordance with section 751(a)(1) of the Tariff Act (19 U.S.C. 1675(a)(1)) and 19 CFR 353.22.

Dated: May 10, 1994.

Paul L. Joffe,

Deputy Assistant Secretary for Import Administration.

[FR Doc. 94–11965 Filed 5–16–94; 8:45 am]

BILLING CODE 3510–DS–P

[C–549–401]

Certain Apparel From Thailand; Scope Amendment

AGENCY: International Trade Administration/Import Administration, Commerce.

ACTION: Certain Apparel From Thailand: Notice of Amendment to the Existing Conversion of the Scope of the Order From the Tariff Schedules of the United States Annotated to the Harmonized Tariff Schedule.

SUMMARY: On January 1, 1989, the United States fully converted to the international harmonized system of tariff classification. On January 11, 1989, the Department of Commerce (the Department) published the Conversion to Use of the Harmonized Tariff Schedule of Classifications for Antidumping and Countervailing Duty Proceedings (54 FR 993; January 11, 1989) (1989 Conversion) for all antidumping and countervailing duty orders in effect or investigations in progress as of January 1, 1989. On July 26, 1993 (58 FR 39789), the Department published a proposed amendment to the conversion. Interested parties were invited to comment on this proposed amended conversion. Based on our analysis of the comments received, the Department is now publishing an amended conversion of the scope of the countervailing duty order on certain apparel from Thailand.

EFFECTIVE DATE: May 17, 1994.

FOR FURTHER INFORMATION CONTACT: Sarah Givens or Kelly Parkhill, Office of Countervailing Compliance, Import Administration, International Trade Administration, U.S. Department of Commerce, Washington, DC 20230, telephone (202) 482–2786.

Background

In 1985, the Department issued a countervailing duty order on Certain Apparel from Thailand (C–549–401) (50 FR 9818; March 12, 1985). The scope of this order was originally defined solely in terms of the Tariff Schedules of the United States Annotated (TSUSA) item numbers; no narrative product description was provided. On January 1, 1989, the United States fully converted from the TSUSA to the Harmonized Tariff Schedule (HTS). Section 1211 of the Omnibus Trade and Competitiveness Act of 1988 directed the Department to "take whatever actions are necessary to conform, to the fullest extent practicable, with the tariff classification system of the Harmonized Tariff Schedule [for] all * * * orders * * *" in effect at the time of the implementation of the HTS.

Accordingly, on January 11, 1989, after reviewing comments received from the public, the Department published the 1989 Conversion for all antidumping and countervailing duty orders in effect or investigations in progress as of January 1, 1989 (54 FR 993). That notice also included the conversion of the scope of the Thai apparel order from TSUSA to HTS item numbers. The 1989 Conversion was based on a one-to-one correspondence of the TSUSA and HTS item numbers. In the notice, the Department stated that it would review the HTS classifications at any time during a proceeding upon receipt of new information or additional comments.

Subsequently, as a result of comments submitted to the Department by the importing public and advice received from the U.S. Customs Service, the Department determined that the 1989 Conversion did not accurately reflect the scope of the order on certain apparel from Thailand and, therefore, that the 1989 Conversion should be amended. On September 15, 1992, the Department published a proposed amendment to the 1989 Conversion and invited interested parties to comment (57 FR 42545). The Department did not receive any comments with respect to the amendment concerning the order on certain apparel from Thailand.

On January 13, 1993, the Department published the amended 1989 Conversion (Amended 1989 Conversion) (58 FR 4151). On March 10, 1993, the Customs Service began liquidating, without regard to countervailing duties, all unliquidated entries of the subject merchandise not covered in the Amended 1989 Conversion that were exported on or after January 1, 1989. Customs also began liquidating at the appropriate rate all unliquidated entries of the subject merchandise covered in the Amended 1989 Conversion that were exported on or after January 1, 1989.

Thereafter, the Department discovered that the Amended 1989 Conversion was based on an inaccurate HTS list. On April 23, 1993, after being notified by the Department of the error, Customs resumed suspending liquidation according to the original 1989 Conversion (54 FR 993).

To rectify the error in the Amended 1989 Conversion, the Department, with the assistance of the U.S. Customs Service and the U.S. International Trade Commission, again compared the TSUSA-defined scope and the HTS-defined scope provided in the 1989 Conversion, and identified those HTS

numbers that reasonably correspond with the TSUSA-defined scope of the Certain Apparel from Thailand countervailing duty order. On July 26, 1993, the Department published a new Proposed Amended Conversion (58 FR 39789) and invited interested parties to comment on this proposed amendment. Based on our analysis of the comments received, the Department has again amended the 1989 Conversion governing the countervailing duty order on certain apparel from Thailand. The HTS numbers included in this order are listed in the attached Appendix.

Analysis of Comments Received

Comment 1: Stearns Manufacturing Company points out that the Proposed Amended Conversion includes female garments fabricated out of PVC coated polyester and PVC coated nylon (HTS 6210.50.10.10) but does not include male garments composed of these same fabrics (HTS 6210.40.10.10). Stearns argues that neither female nor male garments made of this fabric should be included because neither was included in the original 1985 countervailing duty order.

Department's Position: We agree. Because PVC rainwear was not included in the 1985 order, it should not be included in the Amended Conversion. Accordingly, we are deleting from the Amended Conversion the 8-digit subheading number 6210.50.10 and replacing it with the 10-digit number 6210.50.10.20, which does not include PVC rainwear.

Comment 2: Southern Trading Company contends that the scope of the Proposed Amended Conversion is inconsistent because certain female garments are included while the equivalent male garment is excluded. Southern argues that similar garments should be treated in the same manner without regard to gender.

Department's Position: We disagree. The purpose of the new Amended Conversion is to make the scope of the order, as converted to HTS classifications, match the scope of the original order using TSUSA classifications as closely as reasonably possible. Because the original TSUSA-defined order reflected gender, the HTS order should as well.

In addition to the changes we are making in response to interested party comments, we are also making the following changes. First, we are adding HTS item number 6113.00.00.30 to the Amended Conversion to make it more closely match the scope of the original order. This HTS item number covers certain women's and girls' knitted, coated coats and jackets. Second, the Proposed Amended Conversion includes various ornamented garments that were not included in the original 1985 TSUSA order. Therefore, we are limiting the application of the following HTS headings in the Amended Conversion as follows:

6101.20.00, 6103.42.10, 6104.51.00, 6104.52.00, 6104.62.20, 6109.90.10, 6111.30.40
Coverage excludes garments having embroidery or permanently affixed applique work on the outer surface.

6103.43.15, 6103.49.10
Coverage excludes shorts having embroidery or permanently affixed applique work on the outer surface.

6104.53.20, 6104.59.10
Coverage excludes girls' skirts and divided skirts not having embroidery or permanently affixed applique work on the outer surface.

6110.20.20
Coverage excludes mens' or boys' garments having embroidery or permanently affixed applique work on the outer surface.

6204.43.40
Coverage excludes women's dresses of fabrics of multicolored yarns.

6212.10.10
Coverage is limited to brassieres of man-made fibers.

All of these changes are reflected in the new Amended Conversion. The attached Appendix incorporates all of these amendments.

Instructions to Customs

The Department will instruct the Customs Service to liquidate without regard to countervailing duties all unliquidated entries of merchandise not covered by the attached Appendix that were exported on or after January 1, 1989. The Department will also instruct the Customs Service to liquidate at the appropriate rate all unliquidated entries of the subject merchandise covered in the attached appendix that were exported on or after January 1, 1989, but not after December 31, 1993, except for entries made between January 1, 1991 and December 31, 1991. Entries made between January 1, 1991 and December 31, 1991 will be liquidated following the completion of the administrative review that has been requested for that time period.

In addition, we are instructing the Customs Service to terminate the suspension of liquidation for all entries of merchandise not covered in the attached Appendix, that are entered or withdrawn from the warehouse on or after the date of publication of this notice. The Department will also instruct the Customs Service to continue to suspend liquidation and collect the appropriate cash deposit of estimated countervailing duties for the subject merchandise listed in the attached Appendix, entered or withdrawn from the warehouse, on or after the date of publication of this notice.

Dated: May 9, 1994.

Susan G. Esserman,

Assistant Secretary for Import Administration.

Appendix: Amended HTS List for Certain Apparel From Thailand (C–549–401)

4202.1240, 4202.2270, 4202.3295, 4202.9260, 6102.1000, 6103.2200[1], 6103.4315[4], 6104.1915, 6104.2910[1], 6104.3910, 6104.5100[3], 6104.5910[5], 6105.1000, 6109.1000, 6111.3010, 6111.3050, 6111.9040, 6112.2010, 6114.3030, 6202.1220, 6202.9350, 6203.2920[1], 6204.1200[1], 6204.3220, 6204.4340[7], 6204.5930, 6205.2020, 6208.9200, 6209.2050, 6212.1020, 4202.1280, 4202.1260, 4202.9215, 4202.9290, 6102.3010, 6103.2300[1], 6103.4910[4], 6104.2100[1], 6104.3100, 6104.4200, 6104.5200[3], 6104.6220[3], 6105.2020, 6109.9010[3], 6111.3020, 6111.9010, 6111.9050, 6113.00.00.30, 6201.1220, 6202.1340, 6203.1910[1], 6203.4240, 6204.2230[1], 6204.3350, 6204.4440, 6204.6240, 6206.3030, 6209.2010, 6210.3010, 4202.2245, 4202.2280, 4202.9220, 6101.2000[3], 6102.3020, 6103.2910[1], 6104.1200[1], 6104.2200[1], 6104.3310, 6104.4320, 6104.5310, 6104.6320, 6106.1000, 6110.2020[6], 6111.3030, 6111.9020, 6112.1200, 6114.2000, 6201.1340, 6202.9220, 6203.2230[1], 6203.4340, 6204.2300[1], 6204.3930, 6204.5220[2], 6204.6335, 6206.4030, 6209.2020, 6210.50.10.20, 4202.2260, 4202.3240, 4202.9230, 6101.3020, 6103.1920[1], 6103.4210[3], 6104.1320, 6104.2300[1], 6104.3320, 6104.4420, 6104.5320[5], 6104.6920, 6106.2020, 6110.3030, 6111.3040[3], 6111.9030, 6112.1910, 6114.3010, 6201.9220, 6202.9345, 6203.2300[1], 6203.4920, 6204.2920[1], 6204.4230, 6204.5330, 6204.6925, 6208.2200, 6209.2030, 6212.1010[8].

[FR Doc. 94–11972 Filed 5–16–94; 8:45 am]

BILLING CODE 3510–DS–P

[1] Coverage limited to garments that would be covered by this order if separately entered.

[2] Coverage excludes garments of denim or of pile fabrics.

[3] Coverage excludes garments having embroidery or permanently affixed applique work on the outer surface.

[4] Coverage excludes shorts having embroidery or permanently affixed applique work on the outer surface.

[5] Coverage excludes girls' skirts and divided skirts not having embroidery or permanently affixed applique work on the outer surface.

[6] Coverage excludes men's or boys' garments having embroidery or permanently affixed applique work on the outer surface.

[7] Coverage excludes women's dresses of fabrics of multicolored yarns.

[8] Coverage is limited to brassieres of man-made fibers.

[C–357–001]

Leather Wearing Apparel From Argentina; Preliminary Results of Countervailing Duty Administrative Review

AGENCY: International Trade Administration/Import Administration Department of Commerce.

ACTION: Notice of Preliminary Results of Countervailing Duty Administrative Review.

SUMMARY: The Department of Commerce is conducting an administrative review of the countervailing duty order on leather wearing apparel from Argentina during the period January 1, 1991 through December 31, 1991. We preliminarily determine the total net subsidy to be zero for all companies during this review period. We invite interested parties to comment on these preliminary results.

EFFECTIVE DATE: May 17, 1994.

FOR FURTHER INFORMATION CONTACT: Sylvia Chadwick or Rick Herring, Office of Countervailing Compliance, International Trade Administration, U.S. Department of Commerce, Washington, DC 20230; telephone: (202) 482–2786.

SUPPLEMENTARY INFORMATION:

Background

On March 5, 1992, the Department of Commerce (the Department) published in the **Federal Register** a notice of "Opportunity to Request Administrative Review" (57 FR 7910) of the countervailing duty order on leather wearing apparel (LWA) from Argentina (48 FR 11480; March 18, 1983). On March 19, 1992, the Amalgamated Clothing and Textile Workers Union (ACTWU), requested an administrative review of the order. We published the notice of initiation on April 13, 1992 (57 FR 12798) covering the period January 1, 1991 through December 31, 1991. On April 20, 1992, the government of Argentina (GOA) objected to ACTWU's request, alleging that ACTWU lacked standing as an interested party as defined under the law. The GOA neither submitted evidence nor presented any argument that ACTWU lacked standing. The Department determined that the ACTWU had standing to request a review pursuant to 19 CFR 355.2(i)(4), as "a certified or recognized union or group of workers which is representative of the industry or of sellers * * * in the United States of the like product produced in the United States." ACTWU had participated as an interested party in the original investigation and subsequent reviews of this case. For further discussion of the Department's position on the standing of ACTWU to request a review, see decision memorandum to Joseph A. Spetrini dated October 15, 1992; "Interested Party" Status of Domestic Party Concerning the Countervailing Duty Order on Leather Wearing Apparel from Argentina which is on file in the Central Records Unit (room B099 of the Main Commerce Building).

Scope of Review

Imports covered by this review are shipments of Argentine leather coats, jackets and other apparel including leather vests, pants and shorts for men, boys, women, girls and infants. Also included are outer shells and parts and pieces of leather wearing apparel. This merchandise is classifiable under item number 4203.10.40 of the Harmonized Tariff Schedule (HTS). The HTS item number is provided for convenience and Customs purposes. The written description remains dispositive.

The review period is January 1, 1991 through December 31, 1991. This review involves one company, Comercio Internacional S.A.C.I.F.I.A. (Comercio), which accounts for virtually all exports to the U.S., and nine government programs.

Analysis of Programs

1. Rebate of Indirect Taxes (Reembolso)

The Reembolso program provides a cumulative tax rebate paid upon export and is calculated as a percentage of the f.o.b. invoice price of the exported merchandise. As stated in § 355.44(d)(4)(ii) of the Proposed Regulations (54 FR 23382), the Department will find that the entire amount of any such rebate is countervailable unless the following conditions are met: (1) the program operates for the purpose of rebating prior stage cumulative indirect taxes and/or import charges; (2) the government accurately ascertained the level of the rebate; and (3) the government reexamines its schedules periodically to reflect the amount of actual indirect taxes and/or import charges paid. In prior investigations and administrative reviews of the Argentine Reembolso program, the Department determined that these conditions have been met, and, as such, the entire amount of the rebate has not been countervailed (see, e.g., Leather Wearing Apparel from Argentina, Final Results of Countervailing Duty Administrative Review (56 FR 10410; March 12, 1991); Cold Rolled Carbon Steel Flat-rolled Products from Argentina, Final Results of Countervailing Duty Administrative Review (56 FR 28527; June 21, 1991); Oil Country Tubular Goods from Argentina, Final Results of Countervailing Duty Administrative Review (56 FR 64493; December 10, 1991).

However, once a rebate program meets this threshold, the Department must still determine in each case whether there is an overrebate; that is, the Department must still analyze whether the rebate for the subject merchandise exceeds the total amount of indirect taxes and import duties borne by inputs that are physically incorporated into the exported product. If the rebate exceeds the amount of allowable indirect taxes and import duties, the Department will, pursuant to § 355.44(d)(4)(i) of the Proposed Regulations, find a countervailable benefit equal to the difference between the Reembolso rebate rate and the allowable rate determined by the Department (i.e., the overrebate).

To determine whether there was an overrebate during the review period, the Department requested the Government of Argentina to provide information on any changes to the Reembolso program for Leather Wearing Apparel. According to the information provided by the Government of Argentina, on October 16, 1986, Decree 1555/86 modified the reembolso program and set precise and transparent guidelines to implement the refund of indirect taxes and import charges. The decree established three broad rebate levels covering all products and industry sectors. The rates for levels I, II and III were 10 percent, 12.5 percent, and 15 percent, respectively. Based on the GOA's 1986 calculation of the tax incidence in the leather wearing apparel industry, this industry was classified in level II.

The GOA suspended cash payment of rebates under the reembolso program in April 1989. Pursuant to the Emergency Economic Law dated September 25, 1989 (Law 23,697), the suspension of cash payments was continued for an additional 180 days. Rebates accrued during the suspension period were to be paid in export credit bonds. On March 4, 1990, the entire program was suspended for 90 days by Decree 435/90. Decree 1930/90 suspended payments of the reembolso for an additional 12-month period.

Decree 612/91 dated April 10, 1991, reinstated cash payments of the indirect tax rebates and import charges and reduced the rate for the leather wearing apparel industry from 12.5 percent to 8.3 percent. Decree 1011/91 dated May 29, 1991, abolished Decree 1555/86 and incorporated the reduced rebate rates introduced by Decree 612/91. Therefore,

during the period of review, rebates were suspended from January through April 10, 1991, and the rebate rate was 8.3 percent from April 11 through December 31, 1991.

Based on the information provided in the questionnaire response, we calculated the allowable tax incidence for the subject merchandise based on the 1986 study which was in effect during the review period. We found that the rebate of taxes did not exceed the total amount of allowable cumulative indirect taxes and/or import charges paid on physically incorporated inputs, and prior stage indirect taxes levied on the exported product at the final stage of production. Therefore, we preliminarily determine that there was no benefit from this program during the review period.

2. Other Programs

Based on the questionnaire responses, we preliminarily determine that the following programs were not used during the review period: (1) Drawback of customs duties on imported raw materials used in the manufacture of LWA; (2) income tax deduction under Decree 173/85; (3) income tax exemption on exported goods; (4) exemption from stamp-tax; (5) exemption from or rebate of tariff, tributes or taxes levied on goods imported under temporary import certificates; (6) exemption from value-added taxes on exported goods or reimbursement of value-added taxes on purchases of inputs; (7) pre- or post-export financing programs; and (8) benefits for exporting from the ports south of the Rio Colorado.

Preliminary Results of Review

We preliminarily determine the total net subsidy to be zero during the period January 1, 1991 through December 31, 1991.

If the final results of this review remain the same as these preliminary results, the Department intends to instruct the Customs Service not to assess countervailing duties on shipments of the subject merchandise from all companies, exported on or after January 1, 1991 and on or before December 31, 1991. Further, as provided by section 751(a)(1) of the Act, the Department will instruct Customs not to collect cash deposits on shipments of this merchandise from all companies entered or withdrawn from warehouse for consumption on or after the date of publication of the final results of this administrative review.

Parties to this proceeding may request disclosure of the calculation methodology and interested parties may request a hearing not later than ten days after the date of publication of this notice. In accordance with 19 CFR 355.38(c)(1)(ii), interested parties may submit written arguments in case briefs on these preliminary results within 30 days of the date of publication of this notice. Rebuttal briefs, limited to arguments raised in case briefs, may be submitted seven days after the time limit for filing the case brief. Any hearing, if requested, will be held seven days after the scheduled date for submission of rebuttal briefs. Copies of case briefs and rebuttal briefs must be served on interested parties in accordance with 19 CFR 355.38(e).

Representatives of parties to the proceeding may request disclosure of proprietary information under administrative protective order no later than 10 days after the representative's client or employer becomes a party to the proceeding, but in no event later than the date the case briefs are due under 19 CFR 355.38.

The Department will publish the final results of this administrative review, including the results of its analysis of issues raised in any case or rebuttal brief or at a hearing.

This administrative review and notice are being published in accordance with section 751(a)(1) of the Act (19 U.S.C. 1675(a)(1)) and 19 CFR 355.22.

Dated: May 10, 1994.

Susan G. Esserman,

Assistant Secretary for Import Administration.

[FR Doc. 94–11966 Filed 5–16–94; 8:45 am]

BILLING CODE 3510–DS–P

INTERNATIONAL TRADE ADMINISTRATION

[(C–201–001)]

Leather Wearing Apparel From Mexico; Preliminary Results of Countervailing Duty Administrative Review

AGENCY: International Trade Administration/Import Administration Commerce.

ACTION: Notice of preliminary results of countervailing duty administrative review.

SUMMARY: The Department of Commerce is conducting an administrative review of the countervailing duty order on leather wearing apparel from Mexico. We preliminarily determine the net subsidy rate to be zero for the 65 companies listed in the Appendix and 13.35 percent *ad valorem* for all other companies for the period January 1, 1992 through December 31, 1992. We invite interested parties to comment on these results.

EFFECTIVE DATE: May 17, 1994.

FOR FURTHER INFORMATION CONTACT: Brian Albright or Dana Mermelstein, Office of Countervailing Compliance, International Trade Administration, U.S. Department of Commerce, Washington DC 20230; telephone: (202) 482–2786.

SUPPLEMENTARY INFORMATION:

Background

On April 9, 1993, the Department of Commerce (the Department) published in the **Federal Register** a notice of "Opportunity to Request Administrative Review" (58 FR 18374) of the countervailing duty order on leather wearing apparel from Mexico (46 FR 21357; April 10, 1981). On April 30, 1993, the Amalgamated Clothing and Textile Workers Union (ACTWU), whose members produce leather wearing apparel, requested an administrative review of the order. We initiated the review, covering the period January 1, 1992 through December 31, 1992, on May 27, 1993 (58 FR 30769).

Scope of Review

Imports covered by this review are shipments of Mexican leather wearing apparel. These products include leather coats and jackets for men, boys, women, girls, and infants, and other leather apparel products including leather vests, pants, and shorts. Also included are outer leather shells and parts and pieces of leather wearing apparel. This merchandise is currently classifiable under Harmonized Tariff Schedule (HTS) item numbers 4203.10.4030, 4203.10.4060, 4203.10.4085 and 4203.10.4095. The HTS item numbers are provided for convenience and Customs purposes. The written description remains dispositive.

The review covers the period January 1, 1992 through December 31, 1992 and eight programs.

Analysis of Programs

In the questionnaire responses, the Government of Mexico (GOM) certified that 65 producers/exporters of the subject merchandise did not receive benefits from any of the programs under review during the review period (the list of these 65 companies is provided in the Appendix). As a result, we preliminarily determine that those producers/exporters of leather wearing apparel did not receive benefits from the following programs during the 1992 review period:

(A) BANCOMEXT Loans and Export Financing.

(B) Certificates of Fiscal Promotion (CEPROFI).
(C) FOGAIN.
(D) FONEI.
(E) State Tax Incentives.
(F) PITEX.
(G) Import Duty Reductions and Exemptions.
(H) Article 15 Loans.

Best Information Available

IM–146 import statistics published by the U.S. Census Bureau show that the value of subject merchandise imported from Mexico under the HTS item numbers listed above during the review period is $5,490,000. Both the official export statistics reported by the GOM and the sum of total exports of the subject merchandise exported to the United States during the review period reported by the responding companies comprise only a small fraction of this figure. The GOM was unable to reconcile this discrepancy. (See April 22, 1994 Memorandum for the 1992 Administrative Review of Leather Wearing Apparel from Mexico, on file in the public file of the Central Records Unit, room B–099.) Although the GOM was requested to provide information on all exporters of the subject merchandise to the United States, the exporters identified by the GOM account for substantially less than 100 percent of exports of the subject merchandise to the United States. Therefore, in accordance with section 776(c) of the Tariff Act of 1930, as amended (the Act), we are assigning to any exporters of subject merchandise not listed in the Appendix, a rate based on best information available (BIA). As BIA, we used the highest total subsidy rate calculated in any previous administrative review of this order or in the investigation. On this basis, we preliminarily determine the rate for all exporters not listed in the Appendix to be 13.35 percent *ad valorem*. See Leather Wearing Apparel from Mexico; Final Results of Administrative Review of Countervailing Duty Order (48 FR 13474; March 31, 1983).

Calculation of Country-Wide Rate

In calculating the subsidy rates during the review period, we followed the methodology described in the preamble to 19 CFR 355.20(d) (53 FR 52306 and 52325; December 27, 1988). To calculate a country-wide rate, we weight-averaged the rate for the 65 companies for which the GOM provided certifications of non-use with the BIA rate for the remaining value of U.S. imports.

In determining the weights used, the Department used the sum of the 65 responding companies' exports of the subject merchandise to the United States. This figure was then subtracted from the total value of imports of subject merchandise to the United States. The resulting difference is the value for exports to the United States of the subject merchandise that we assigned to all other companies.

The 65 responding companies' weights were the ratio of the value of their exports of the subject merchandise to the United States to the total value of the subject merchandise imported into the United States. For the non-respondent companies, the weight used was the ratio of their assigned value of exports of the subject merchandise to the United States to the total value of imports of the subject merchandise into the United States.

The Department then multiplied the respondent companies' ratio by the calculated *ad valorem* rate found for the programs determined to be bounties or grants (i.e., zero); we multiplied the non-respondent companies' ratio by the 13.35 percent BIA rate. By adding the two results, the Department calculated a weighted average country-wide rate of 9.01 percent.

Following the Department's practice, all companies with a rate significantly different from the weighted average country-wide rate were removed before calculating the all-other country-wide rate. Because the rate for the respondent companies is significantly different, they were removed and will receive their respective rates of zero. As the only remaining companies, the non-respondents' rate of 13.35 percent necessarily comprises the all-other country-wide rate. Therefore, the non-respondent companies (all those not listed in the Appendix) will receive the all-other country-wide rate of 13.35 percent *ad valorem* for subject merchandise exported during the review period.

Preliminary Results of Review

As a result of our review, we preliminarily determine the net subsidy rate to be zero for the 65 companies listed in the Appendix and 13.35 percent *ad valorem* for all other companies during the period January 1, 1992 through December 31, 1992.

Upon completion of this review, the Department intends to instruct the Customs Service to assess countervailing duties as follows for subject merchandise exported on or after January 1, 1992, and on or before December 31, 1992: Zero on shipments from any of the 65 companies listed in the Appendix; and 13.35 percent of the f.o.b. invoice price on shipments from all other companies.

The Department also intends to instruct the Customs Service to waive cash deposits of estimated countervailing duties, as provided by section 751(a)(1) of the Act, on shipments of this merchandise from the companies listed in the Appendix, and to collect a cash deposit of 13.35 percent of the f.o.b. invoice price on shipments from all other companies from Mexico entered, or withdrawn from warehouse, for consumption on or after the date of publication of the final results of this administrative review.

Interested parties may request a hearing not later than 10 days after the date of publication of this notice (See 19 CFR 355.38(b)). Interested parties may submit written arguments in case briefs on these preliminary results within 30 days of the date of publication. Rebuttal briefs, limited to arguments raised in case briefs, may be submitted seven days after the time limit for filing the case brief. Any hearing, if requested, will be held seven days after the scheduled date for submission of rebuttal briefs. Copies of case briefs and rebuttal briefs must be served on interested parties in accordance with section 355.38(e) of the Commerce regulations.

Representatives of parties to the proceeding may request disclosure of proprietary information under administrative protective order no later than 10 days after the representative's client or employer becomes a party to the proceeding, but in no event later than the date the case briefs are due (See 19 CFR 355.34(b)(1)(iii)).

The Department will publish the final results of this administrative review including the results of its analysis of issues raised in any case or rebuttal brief.

This administrative review and notice are in accordance with section 751(a)(1) of the Act (19 U.S.C. 1675(a)(1)) and 19 CFR 355.22.

Dated: May 9, 1994.

Susan G. Esserman,

Assistant Secretary for Import Administration.

Appendix

1. Alfredo Costuras Originales S.A. De C.V.
2. Aeroenvios De Mexico S.A. De C.V.
3. Articulos De Piel De Guadalajara S.A. De C.V.
4. Bemisa S.A. De C.V.
5. Calzado Emege S.A. De C.V.
6. Cornell Piel S.A. De C.V.
7. Exclusive Design In Leather Felle S. De R.L.
8. Articulos Charros Y Vaqueros S.A. De C.V.
9. Importaciones Y Exportaciones Anaf S.A. De C.V.
10. Lusomoda De Mexico S.A. De C.V.
11. Loredano S.A. De C.V.

12. Manufacturera California S.A. De C.V.
13. Melmex S. De R.L.
14. Originales Hechos A Mano S.A. De C.V.
15. Price Club De Mexico S.A. De C.V.
16. Procopiel Exotica S.A. De C.V.
17. Pelet Jalisco-Baja California S.A. De C.V.
18. Servicio Harley Davidaon S.A. De C.V.
19. San Sebastian Curte S.A. De C.V.
20. Tapetes Tipicos S.A. De C.V.
21. United Parcel Service De Mexico S.A. De C.V.
22. Zuid De Mexico S.A. De C.V.
23. Pedro Alarcon Roman
24. Juan Martin Aguilla Alvarez
25. Rosa Isela Bocanegra Morales
26. Agustin Carillo Castillo
27. Gregoria Deitz Groswirte
28. Maria Azucena Flores Martinez
29. Rocio Gallardo
30. Jose Garcia
31. Enrique Garcia Avila
32. Antonio Garcia Gonzalez
33. Juan Manuel Garcia Gonzalez
34. Jose De Jesus Gonzalez De La Torre
35. Vicente Haro Navarro
36. Lino Salvador Hernandez Gonzalez
37. Jose De Jesus Hernandez Herrera
38. M. Teresa De Jesus Hernandez Rodriguez
39. Francisco Javier Hurtado Vasquez
40. Antonio Hurtado
41. J. Cruz Lopez Avila
42. Noe Martinez Bautista
43. Roberto Martinez Castillo
44. Guillermo Martinez Fernandez
45. Bartolo Morales Hernandez
46. Ismael Mora Hernandez
47. J. Cruz Orozco Alviso
48. Adolfo Penilla
49. Rosa Ramos
50. Salvador Rios Bueno
51. Jose Luis Rodriguez Juarez
52. J. Guadalupe Rodriguez Ortiz
53. Leonel Salceda Toledo
54. Martin Humberto Serrano Robles
55. Alejandro Sidransky Marcus
56. Marco Antonio Sotelo Salazar
57. Jose Sotelo
58. Juan Antonio Torres Torres
59. Laura Vilches Mares
60. Ricardo Zaragoza Gutierrez
61. Teresa Zedillo Lagos
62. George Zohn Tracktman
63. Exclusivos Baez
64. Commercializadora Cevis S.A. De C.V.
65. Cia. Exportadora De Chapala S.A. De C.V.

[FR Doc. 94–11970 Filed 5–16–94; 8:45 am]
BILLING CODE 3510–DS–P

International Trade Administration, Commerce

Export Trade Certificate of Review

ACTION: Notice of Issuance of an Amended Export Trade Certificate of Review, Application No. 87–9A004.

SUMMARY: The Department of Commerce has issued an amendment to the Export Trade Certificate of Review granted to AMT—The Association For Manufacturing Technology ("AMT") on May 19, 1987. Notice of issuance of the Certificate was published in the **Federal Register** on May 22, 1987 (52 FR 19371).

FOR FURTHER INFORMATION CONTACT: W. Dawn Busby, Director, Office of Export Trading Company Affairs, International Trade Administration, (202) 482–5131. This is not a toll-free number.

SUPPLEMENTARY INFORMATION: Title III of the Export Trading Company Act of 1982 (15 U.S.C. sections 4001–21) authorizes the Secretary of Commerce to issue Export Trade Certificates of Review. The regulations implementing title III are found at 15 CFR part 325 (1993).

The Office of Export Trading Company Affairs is issuing this notice pursuant to 15 CFR 325.6(b), which requires the Department of Commerce to publish a summary of a Certificate in the **Federal Register**. Under section 305(a) of the Act and 15 CFR 325.11(a), any person aggrieved by the Secretary's determination may, within 30 days of the date of this notice, bring an action in any appropriate district court of the United States to set aside the determination on the ground that the determination is erroneous.

Description of Amended Certificate

Export Trade Certificate of Review No. 87–00004, was issued to AMT—The Association of Manufacturing Technology on May 19, 1987 (52 FR 19371, May 22, 1987) and previously amended on December 11, 1987 (52 FR 48454, December 22, 1987), January 3, 1989 (54 FR 837, January 10, 1989); April 20, 1989 (54 FR 19427, May 5, 1989); May 31, 1989 (54 FR 24931, June 12, 1989); May 29, 1990 (55 FR 23576, June 11, 1990); June 7, 1991 (56 FR 28140, June 19, 1991); November 27, 1991 (56 FR 63932, December 6, 1991); and July 20, 1992 (57 FR 33319, July 28, 1992).

AMT's Export Trade Certificate of Review has been amended to:

1. Add each of the following companies as a new "Member" of the Certificate within the meaning of § 325.2 (1) of the Regulations (15 CFR 325.2(1)): BHS-Torin, Inc., Farmington, Connecticut; Bertsche Engineering Corporation, Buffalo Grove, Illinois; Bohle Machine Tools, Inc., Farmington Hills, Michigan; Bramac Machine Tool Co., Tucson, Arizona; Burr King Mfg. Co., Inc., South El Monte, California; Cellular Concepts Company, Detroit, Michigan (controlling entity: U.S. Equipment Co.); City Machine Tool & Die Company, Inc., Muncie, Indiana; D & H Machinery, Inc. Toledo, Ohio; Darex Corporation, Ashland, Oregon; DeVlieg-Bullard Services Group, Rockford, Illinois (controlling entity: DeVlieg-Bullard Inc.); Feldmann, Inc., Rockford, Illinois; Industrial Metal Products Corporation, Lansing, Michigan; Kalamazoo Saw Co., Kalamazoo, Michigan (controlling entity: KTS Industries, Inc.); Komatsu-Cybermation, Medford, Massachusetts (controlling entity: Komatsu Ltd.); Lasercut, Inc., North Bradford, Connecticut; M T R Ravensburg, Inc., Rochester, New York; Milltronics Manufacturing Company, Chanhassen, Minnesota; Modern Machine Tool Company, Jackson, Michigan; Munson Machinery Company, Inc., Utica, New York; Parlec, Inc., Fairport, New York; Rofin-Sinar, Inc., Plymouth, Michigan (controlling entity: Siemens Corporation); Sugino Corporation, Schaumburg, Illinois (controlling entity: Sugino Machine Ltd.); Utilase Systems, Inc., Detroit, Michigan; Weldun Flexible Assembly Systems, Bridgman, Michigan (controlling entity: Weldun International, Robert Bosch Corp.); Wes-Tech, Inc., Buffalo Grove, Illinois; Herman Williams Company, Inc., Birmingham, Alabama; and Peter Wolters of America, Plainville, Massachusetts (Peter Wolters AG);

2. Delete each of the following companies as a "Member" of the Certificate: Abrasive Engineering & Manufacturing; Alpha Machine, Inc.; American Machine & Science (Katy Inds.); Coherent General, Inc.; Equipment Systems Technology Company; GTE Valenite Corporation; The Hill Acme Company; C. O. Hoffacker Company; HZ Clearing Inc.; Jacobson Tool & Manufacturing Corp.; L & J Press Corporation; Maho Machine Tool Corporation; Manuflex Corporation; Mega Manufacturing Inc.; Pacific Press & Shear Inc.; Perfekt Precision Mfg. Co., Inc.; Tannewitz, Inc.; Truxton Machinery, Inc.; Unipunch Products, Inc.; and Vulcan Tool Company; and

3. Change the listing of the company name for each current "Member" cited in this paragraph to the new listing cited in this paragraph in parenthesis as follows: American Pfauter Limited (American Pfauter Limited Partnership); Automation & Modular Components, Inc. (Automation & Modular Components); Barnes Drill Company (Barnes International, Inc.); Belden Tools, Inc. (Belden Inc.); Blue Valley Machine and Mfg. Co., Inc. (Blue Valley Machine and Mfg. Co.); Bracker Corporation (Bracker Corporation Pittsburgh); Bryant Grinder Corporation (Vermont-USA Machine Tool Group); Cleveland Punch & Shear (Bath Iron Works); The Cleveland Tapping Machine Company (TCE Corporation); Command Corporation (Command

Corporation International); Compumachine Inc. (Compumachine Incorporated); Cooper-Weymouth, Peterson Div., Reed National Corp. (Cooper-Weymouth, Peterson); Crankshaft Machine Company (Crankshaft Machine Group); Dake Division, JSJ Corporation (Dake); Danly Machine Division/Connell Ltd. Partnership (Danly-Komatsu, L.P.); Digital Electronic Automation, Inc. (DEA); Eaton Leonard Technologies, Inc. (Eaton Leonard, Inc.); Electro Arc Manufacturing Co., Inc. (Electro Arc Manufacturing Co.); Esterline Corporation (Esterline Technologies); Fadal Engineering Company, Inc. (Fadal Engineering Co., Inc.); Fairfield Machine Co., Inc. (Fairfield Machine); Fayscott Company (Fayscott Co.); Fellows Corporation (Vermont-USA Machine Tool Group); Genesis Systems Group Inc. (Genesis Systems Group); George Fischer—Bohle Machine Tools Corp. (George Fischer, Ltd.); Gleason Corporation (The Gleason Corporation); Gold Crown Machinery, Inc. (Goldcrown Machinery); Greenfield Industries—Geometric Division (Greenfield Industries); Hansvedt Industries, Inc. (Hansvedt EDM Division); Harper Company (Harper Surface Finishing Systems, Inc.); HEM, Inc. (HE&M Saw); P. R. Hoffman Machine Products Co. (P. R. Hoffman Machine Products); Hoglund Corporation (Hoglund Technology Corporation); Imperial Stamp & Engraving Co., Inc. (Imperial Stamp & Engraving Company); Jarvis Corporation (Jarvis Products Corporation); Jones & Lamson-Vermont Corp. (Vermont-USA Machine Tool Group); Litton Industrial Automation—Machining & Assembly Sys. Div. (Litton Industrial Automation); Lynn Electronics Corp. (Lynn Electronics Corporation); J.M. Montgomery Mfg. Inc. (J.M. Montgomery Manufacturing Inc.); Multipress Incorporated (Multipress Division); National Acme Co. (The National Acme Company); National Broach & Machine Company (National Broach & Machine Co.); The Ohio Broach Machine Co. (The Ohio Broach & Machine Co.); Okuma Machinery, Inc. (Okuma Inc.); Peerless (Peerless Saw Division—Wisconsin Automated Machinery); PH Hydraulics & Automation, Inc. (P H Hydraulics and Automation, Inc.); PMC Industries, Inc. (PMC Industries); PS Group, Inc. (PS Group); Pope Machinery Inc. (Pope Corporation); Rank Pneumo Inc. (Rank Taylor Hobson Inc.); Republic Lagun CNC Corporation (Republic Lagun Machine Tool Co.); The S-P Manufacturing Corporation (S-P/Sheffer International, Inc.); Seneca Falls Machine Tool Co., Inc. (Seneca Falls Technology Group); Setco Industries, Inc. (Setco Sales Company); South Bend Lathe, Inc. (South Bend Lathe Corp.); and Teledyne Industries, Inc. (Teledyne).

A copy of the amended certificate will be kept in the International Trade Administration's Freedom of Information Records Inspection Facility, room 4102, U.S. Department of Commerce, 14th Street and Constitution Avenue, NW., Washington, DC 20230.

Dated: May 10, 1994.

W. Dawn Busby,

Director, Office of Export Trading Company Affairs.

[FR Doc. 94–11963 Filed 5–16–94; 8:45 am]

BILLING CODE 3510–DR–P

Scope Rulings

AGENCY: International Trade Administration/Import Administration, Department of Commerce

ACTION: Notice of Scope Rulings and Anticircumvention Inquiries

SUMMARY: The Department of Commerce (the Department) hereby publishes a list of scope rulings and anticircumvention inquiries completed between January 1, 1994, and March 31, 1994. In conjunction with this list, the Department is also publishing a list of pending requests for scope clarifications and anticircumvention inquiries. The Department intends to publish future lists within 30 days of the end of each quarter.

EFFECTIVE DATE: May 17, 1994.

FOR FURTHER INFORMATION CONTACT: Jason R. Field or Wendy J. Frankel, Office of Antidumping Compliance, Import Administration, International Trade Administration, U.S. Department of Commerce, 14th Street and Constitution Avenue, NW., Washington, DC 20230; telephone (202) 482–5253.

Background

The Department of Commerce regulations (19 CFR 353.29(d)(8) and 355.29(d)(8)) provide that on a quarterly basis the Secretary will publish in the **Federal Register** a list of scope rulings completed within the last three months.

This notice lists scope rulings and anticircumvention inquiries completed between January 1, 1994, and March 31, 1994, and pending scope clarification and anticircumvention inquiry requests. The Department intends to publish in July 1994 a notice of scope rulings and anticircumvention inquiries completed between April 1, 1994, and June 30, 1994, as well as pending scope clarification and anticircumvention inquiry requests.

The following lists provide the country, case reference number, requester(s), and a brief description of either the ruling or product subject to the request.

Scope Rulings Completed Between January 1, 1994 and March 31, 1994

Country: People's Republic of China.

A–570–003: Cotton Shop Towels. Win-Tex Products, Inc. (original applicant)—Remanded from the Court of International Trade to determine whether certain cotton shop towels, hemmed or cut and hemmed in Honduras, are within the scope of the order. Our redetermination pursuant to the remand is that these shop towels are within the scope of the order—1/18/94.

A–570–501: Paint Brushes. Stanley Works—Paint brushes with a blend of 60% synthetic and 40% natural fibers are outside the scope of the order—3/25/94.

Country: Japan.

A–588–823: Professional Electric Cutting Tools. Makita Inc., Makita, U.S.A.—Electronic Jig Saw Model 4303C is outside the scope of the order—3/25/94.

A–588–015: Televisions. AGIV (USA) Inc.— AIWA Model VX–T1000MK3KEI color TV–VCR combination is outside the scope of the order—1/28/94.

A–588–055: Acrylic Sheet. Sekisui America Corp.—ESLON DC PLATE manufactured by Sekisui Chemical Co., Ltd., is outside the scope of the finding—3/25/94.

A–588–405: Cellular Mobile Telephones and Subassemblies. Matsushita Communication Industrial Co., Ltd., and its related entities—three models of hand-held portable cellular telephones and their subassemblies and/or components thereof are outside the scope of the order—3/25/94.

Matsushita Communication Industrial Co., Ltd., and its related entities—Remanded from the Court of International Trade. Certain portable telephones, subassemblies, and components thereof are outside the scope of the order (24 products)—3/31/94.

Anticircumvention Rulings Completed Between January 1, 1994 and March 31, 1994

Country: People's Republic of China.

A–570–814: Butt-Weld Pipe Fittings. U.S. Fittings Group—Affirmative determination on the circumvention of the order by adding value in Thailand (modifying pipe fittings to "finished" from "unfinished" status) after

importation from the People's Republic of China—3/25/94.

Scope Inquiries Terminated Between January 1, 1994 and March 31, 1994

None.

Anticircumvention Inquiries Terminated Between January 1, 1994 and March 31, 1994

Country: Japan.

A–588–818: Personal Word Processors (PWPs)—Smith Corona Corporation. Anticircumvention inquiry to determine whether the order is being circumvented by the importation, completion and assembly of personal word processor parts and components by Brother Industries (USA), Inc., in the United States, terminated 4/22/94.

Pending Scope Clarification Requests as of March 31, 1994

Country: Mexico.

A–201–805: Circular Welded Non-Alloy Steel Pipe. Allied Tube & Conduit Corp., American Tube Co., Century Tube Corp., CSI Tubular Productions, Inc., Laclede Steel Co., LTV Tubular Productions Co., Sawhill Tubular Division, Sharon Tube Co., Tex-Tube Division, Western Tube & Conduit Corp., Wheatland Tube Co.—Clarification to determine whether pipe produced to API 5L line pipe specifications or to both ASTM A–53 standard pipe specification and the API 5L line pipe specification (dual-certified pipe), when intended for use as standard pipe or when actually used as standard pipe, is within the scope of the order. Affirmative preliminary scope ruling issued on 1/13/94.

Country: Brazil.

A–351–809: Circular Welded Non-Alloy Steel Pipe. Allied Tube & Conduit Corp., American Tube Co., Century Tube Corp., CSI Tubular Productions, Inc., Laclede Steel Co., LTV Tubular Productions Co., Sawhill Tubular Division, Sharon Tube Co., Tex-Tube Division, Western Tube & Conduit Corp., Wheatland Tube Co.—Clarification to determine whether pipe produced to API 5L line pipe specifications or to both ASTM A–53 standard pipe specification and the API 5L line pipe specification (dual-certified pipe), when intended for use as standard pipe or when actually used as standard pipe, is within the scope of the order. Affirmative preliminary scope ruling issued on 1/13/94.

A–351–603: Brass Sheet and Strip. Eluma International Inc.—Clarification to determine whether brass circles are within the scope of the order.

Country: People's Republic of China.

A–570–504: Candles. Two's Company—Clarification to determine whether certain decorated pillar candles and red and gold angel taper candle are within the scope of the order.

A.J. Cohen—Clarification to determine whether certain holiday taper wax candles are within the scope of the order.

Kole Imports—Clarification to determine whether certain holiday taper wax candles are within the scope of the order.

E & G Company—Clarification to determine whether certain musical holiday wax candles are within the scope of the order.

Country: Korea.

A–580–809: Circular Welded Non-Alloy Steel Pipe. Allied Tube & Conduit Corp., American Tube Co., Century Tube Corp., CSI Tubular Productions, Inc., Laclede Steel Co., LTV Tubular Productions Co., Sawhill Tubular Division, Sharon Tube Co., Tex-Tube Division, Western Tube & Conduit Corp., Wheatland Tube Co.—Clarification to determine whether pipe produced to API 5L line pipe specifications or to both ASTM A–53 standard pipe specification and the API 5L line pipe specification (dual-certified pipe), when intended for use as standard pipe or when actually used as standard pipe, is within the scope of the order. Affirmative preliminary scope ruling issued on 1/13/94.

Country: Venezuela.

A–307–885: Circular Welded Non-Alloy Steel Pipe. Self-initiation. Clarification to determine whether pipe produced to API 5L line pipe specifications or to both ASTM A–53 standard pipe specification and the API 5L line pipe specification (dual-certified pipe), when intended for use as standard pipe or when actually used as standard pipe, is within the scope of the order. Affirmative preliminary scope ruling issued on 1/13/94.

Country: Japan.

A–588–014: Tuners. Alpine Electronics—Clarification to determine whether certain car radio/stereo and/or replacement parts, comprised of four subassemblies and their components, are within the scope of the finding.

Fujitsu Ten Corporation of America—Clarification to determine whether certain "front end" components of car tuners are within the scope of the finding.

A–588–405: Cellular Mobile Telephones and Subassemblies. Antel Communications Corporation and Tottori Sanyo Electric Co., Ltd.—Clarification to determine whether Sanyo Model CMP 351 portable cellular telephone and Antel Model STR 1600 portable cellular telephone are within the scope of the order.

Toyocom U.S.A. Inc.—Clarification to determine whether temperature compensated crystal oscillators (TCXOs) and High Frequency Crystal Mechanical filters (HCM filters) are within the scope of the order.

Matsushita Communication Industrial Co., Ltd., and its related entities—Remanded from the Court of International Trade. Clarification to determine whether certain portable telephones, subassemblies, and components thereof are within the scope of the order (5 products).

Mitsubishi Electric Corp., Mitsubishi Electronics America, Inc., Mitsubishi Consumer Electronics America, Inc.—Clarification to determine whether Electronic Model MT109 and MT 119 Portable Cellular Telephones are within the scope of the order.

TDK Corporation of America—Clarification to determine whether Duplexers, Voltage Control Oscillators and Isolators are within the scope of the order.

Sony Corporation and Sony Electronics Inc.—Clarification to determine whether model CM–H333, and subassemblies thereof are within the scope of the order.

A–588–823: Professional Electric Cutting Tools. Makita Inc., Makita, U.S.A.—Clarification to determine whether Router models 3621 and 3621A are within the scope of the order.

Makita Inc., Makita, U.S.A.—Clarification to determine whether a bench top wet tile saw is within the scope of the order.

Makita Inc., Makita, U.S.A.—Clarification to determine whether Planer model 1912B is within the scope of the order.

A–588–604: Tapered Roller Bearings and Parts Thereof. Koyo Seiko—Clarification to determine whether certain forgings are within the scope of the order. Affirmative preliminary ruling issued on 2/28/94.

A–588–814: Polyethylene Terephthalate (PET) Film. Kimoto U.S.A. Inc.—Clarification to determine whether certain Anti-Static Clear Film is within the scope of the order.

Country: Argentina.

C–357–803: Leather. Petitioners—Clarification to determine whether upper bovine leather without hair on, not whole, prepared after tanning is within the scope of the countervailing duty order.

Country: Taiwan.

A–570–808: Lug Nuts. Consolidated International—Clarification to

determine whether certain hex size lug nuts are within the scope of the order.

Country: Sweden.

A–401–040: Stainless Steel Plate. Armco, Inc., G.O. Carlson, Allegheny Ludlum Corp., and Washington Steel Corp.—Clarification to determine whether Stavax, Ramax, and 904L are within the scope of the finding.

Avesta Sheffield—Clarification to determine whether stainless steel "hot bands" are within the scope of the finding.

Country: Germany.

A–428–801: Antifriction Bearings (other than Tapered Roller Bearings) and Parts Thereof. Rotek—Clarification to determine whether certain slewing rings are within the scope of the order.

SKF—Clarification to determine whether certain textile machinery components are within the scope of the order.

Consolidated Saw Mill International (CSMI) Inc.—Clarification to determine whether certain Cambio bearings contained in its sawmill debarker are within the scope of the order.

Pending Anticircumvention Inquiry Requests as of March 31, 1994

Country: Mexico.

A–201–806: Steel Wire Rope. Committee of Domestic Steel Wire Rope and Specialty Cable Manufacturers—Anticircumvention inquiry to determine whether a producer of steel wire rope in Mexico is circumventing the antidumping order by importing steel wire strand into the United States where it is wound into steel wire rope.

Country: Japan.

A–588–807: Industrial Belts and Components. BRECOFLEX Corp.—Anticircumvention inquiry to determine whether the order is being circumvented by the processing of Japanese belting into belts in Mexico before importation into the United States.

Interested parties are invited to comment on the accuracy of the list of pending scope clarification requests. Any comments should be submitted to the Assistant Secretary for Import Administration, International Trade Administration, room B–099, U.S. Department of Commerce, 14th Street and Constitution Avenue, NW., Washington, DC 20230.

Dated: May 11, 1994.

Roland L. MacDonald,

Acting Deputy Assistant Secretary for Compliance.

[FR Doc. 94–11969 Filed 5–16–94; 8:45 am]

BILLING CODE 3510–DS–P

Lehigh University et al.; Notice of Consolidated Decision on Applications for Duty-Free Entry of Scientific Instruments

This is a decision consolidated pursuant to Section 6(c) of the Educational, Scientific, and Cultural Materials Importation Act of 1966 (Pub. L. 89–651, 80 Stat. 897; 15 CFR 301). Related records can be viewed between 8:30 A.M. and 5:00 P.M. in Room 4211, U.S. Department of Commerce, 14th and Constitution Avenue, N.W., Washington, D.C.

Comments: None received. *Decision:* Approved. No instrument of equivalent scientific value to the foreign instruments described below, for such purposes as each is intended to be used, is being manufactured in the United States.

Docket Number: 94–024. *Applicant:* Lehigh University, Bethlehem, PA 18015. *Instrument:* Measurement and Analysis of Surface Interactions and Forces. *Manufacturer:* Anutech Pty Ltd., Australia. *Intended Use:* See notice at 59 FR 13706, March 23, 1994. *Reasons:* The foreign instrument provides measurements of forces and interactions between polymeric surfaces in the vicinity of each other on a nanometer scale in a gaseous or liquid environment. *Advice Received From:* The National Institute of Standards and Technology, April 21, 1994.

Docket Number: 94–025. *Applicant:* Princeton University, Princeton, NJ 08544. *Instrument:* Calorimetric System, Model STA409C. *Manufacturer:* Netzsch.-Geratebau GmbH, Germany. *Intended Use:* See notice at 59 FR March 23, 1994. *Reasons:* The foreign instrument provides simultaneous differential scanning calorimetry, thermogravimetry analysis and differential thermal analysis with 1 to 2% accuracy. *Advice Received From:* Naval Surface Warfare Center, April 25, 1994.

The National Institute of Standards and Technology and Naval Surface Warfare Center advise that (1) the capabilities of each of the foreign instruments described above are pertinent to each applicant's intended purpose and (2) they know of no domestic instrument or apparatus of equivalent scientific value for the intended use of each instrument.

We know of no other instrument or apparatus being manufactured in the United States which is of equivalent scientific value to either of the foreign instruments.

Pamela Woods,

Acting Director, Statutory Import Programs Staff.

[FR Doc. 94–11971 Filed 5–16–94; 8:45 am]

BILLING CODE 3510–DS–F

Minority Business Development Agency

Business Development Center Applications: State of Alaska

AGENCY: Minority Business Development Agency.

ACTION: Notice.

SUMMARY: In accordance with Executive Order 11625 and 15 U.S.C. 1512, the Minority Business Development Agency (MEDA) is soliciting competitive applications under its Minority Business Development Center (MBDC Program. The total cost of performance for the first budget period (12 months) from October 1, 1994 to September 30, 1995, is estimated at $198,971. The application must include a minimum cost-share of 15% of the total project cost through non-Federal contributions. Cost-sharing contributions may be in the form of cash contributions, clients fees, in-kind contributions or combinations thereof. The MBDC will operate in the State of Alaska Geographic Service Area.

The funding instrument for this project will be a cooperative agreement. Competition is open to individuals, non-profit and for-profit organizations, state and local governments, American Indian tribes and educational institutions.

The MBDC program provides business development services to the minority business community to help establish and maintain viable minority businesses. To this end, MEDA funds organizations to identify and coordinate public and private sector resources on behalf of minority individuals and firms; to offer a full range of management and technical assistance to minority entrepreneurs; and to serve as a conduit of information and assistance regarding minority business.

Applications will be evaluated on the following criteria: the experience and capabilities of the firm and its staff in addressing the needs of the business community in general and, specifically, the special needs of minority businesses, individuals and organizations (50 points); the resources available to the firm in providing business development services (10 points); the firm's approach (techniques

and methodologies) to performing the work requirements included in the application (20 points); and the firm's estimated cost for providing such assistance (20 points). An application must receive at least 70% of the points assigned to each evaluation criteria category to be considered programmatically acceptable and responsive. Those applications determined to be acceptable and responsive will then be evaluated by the Director of MBDA. Final award selections shall be based on the number of points received, the demonstrated responsibility of the applicant, and the determination of those most likely to further the purpose of the MBDA program. Negative audit findings and recommendations and unsatisfactory performance under prior Federal wards may result in an application not being considered for ward. The applicant with the highest point score will not necessarily receive the award.

MBDCs shall be required to contribute at least 15% of the total project cost through non-Federal contributions. To assist in this effort, the MBDCs may charge client fees for management and technical assistance (M&TA) rendered. Based on a standard rate of $50 per hour, the MBDC will charge client fees at 20% of the total cost for firms with gross sales of $500,000 or less, and 35% of the total cost for firms with gross sales of over $500.000.

Quarterly reviews culminating in year-to-date evaluations will be conducted to determine if funding for the project should continue. Continued funding will be at the total discretion of MBDA based on such factors as an MBDC's performance, the availability of funds and Agency priorities.

DATES: The closing date for applications is June 24, 1994.

Applications must be postmarked on or before June 24, 1994.

The mailing address for submission is: San Francisco Regional Office, Minority Business Development Agency, U.S. Department of Commerce, 221 Main Street, Room 1280, San Francisco, California 94105, 415/744–3001.

A pre-application conference to assist all interested applicants will be held at the following address and time: San Francisco Regional Office, Minority Business Development Agency, U.S. Department of Commerce, 221 Main Street, Room 1280, San Francisco, California 94105, June 1, 1994 at 10 a.m.

FOR FURTHER INFORMATION CONTACT: Melda Cabrera, Regional Director San Francisco Regional Office at 415/744–3001.

SUPPLEMENTARY INFORMATION: Anticipated processing time of this award is 120 days. Executive Order 12372, "Intergovernmental Review of Federal Programs," is not applicable to this program. The collection of information requirements for this project have been approved by the Office of Management and Budget (OMB) and assigned OMB control number 0640–0006. Questions concerning the preceding information can be answered by the contact person indicated above, and copies of application kits and applicable regulations can be obtained at the above address.

Pre-Award Costs—Applicants are hereby notified that if they incur any costs prior to an award being made, they do so solely at their own risk of not being reimbursed by the Government. Notwithstanding any verbal assurance that an applicant may have received, there is no obligation on the part of the Department of Commerce to cover pre-award costs.

Awards under this program shall be subject to all Federal laws, and Federal and Departmental regulations, policies, and procedures applicable to Federal financial assistance awards.

Outstanding Account Receivable—No award of Federal funds shall be made to an applicant who has an outstanding delinquent Federal debt until either the delinquent account is paid in full, a repayment schedule is established and at least one payment is received, or other arrangements satisfactory to the Department of Commerce are made.

Name Check Policy—All non-profit and for-profit applicants are subject to a name check review process. Name checks are intended to reveal if any key individuals associated with the applicant have been convicted of or are presently facing criminals charges such as fraud, theft, perjury, or other matters which significantly reflect on the applicant's management, honesty or financial integrity.

Award Termination—The Departmental Grants Officer may terminate any grant/cooperative agreement in whole or in part at any time before the date of completion whenever it is determined that the award recipient has failed to comply with the conditions of the grant/cooperative agreement. Examples of some of the conditions which can cause termination are unsatisfactory performance of MBDC work requirements, and reporting inaccurate or inflated claims of client assistance. Such inaccurate or inflated claims may be deemed illegal and punishable by law.

False Statements—A false statement on an application for Federal financial assistance is grounds for denial or termination of funds, and grounds for possible punishment by a fine or imprisonment as provided in 18 U.S.C. 1001.

Primary Applicant Certifications—All primary applicants must submit a completed Form CD–511, "Certifications Regarding Debarment, Suspension and Other Responsibility Matters; Drug-Free Workplace Requirements and Lobbying."

Nonprocurement Debarment and Suspension—Prospective participants (as defined at 15 CFR part 26, section 105) are subject to 15 CFR part 26, "Nonprocurement Debarment and Suspension" and the related section of the certification form prescribed above applies.

Drug Free Workplace—Grantees (as defined at 15 CFR part 26, section 605) are subject to 15 CFR part 26, Subpart F, "Governmentwide Requirements for Drug-Free Workplace (Grants)" and the related section of the certification form prescribed above applies.

Anti-Lobbying—Persons (as defined at 15 CFR part 28, section 105) are subject to the lobbying provisions of 31 U.S.C. 1352, "Limitation on use of appropriated funds to influence certain Federal contracting and financial transactions," and the lobbying section of the certification form prescribed above applies to applications/bids for grants, cooperative agreements, and contracts for more than $100,000.

Anti-Lobbying Disclosures—Any applicant that has paid or will pay for lobbying using any funds must submit an SF–LLL, "Disclosure of Lobbying Activities," as required under 15 CFR part 28, Appendix B.

Lower Tier Certifications—Recipients shall require applications/bidders for subgrants, contracts, subcontracts, or other lower tier covered transactions at any tier under the award to submit, if applicable, a completed Form CD–512, "Certifications Regarding Debarment, Suspension, Ineligibility and Voluntary Exclusion-Lower Tier Covered Transactions and Lobbying" and disclosure form, SF–LLL, "Disclosure of Lobbying Activities." Form CD–512 is intended for the use of recipients and should not be transmitted to DOC. SF–LLL submitted by any tier recipient or subrecipient should be submitted to DOC in accordance with the instructions contained in the award document.

11.800 Minority Business Development Center

(Catalog of Federal Domestic Assistance)

Dated: May 11, 1994.

Melda Cabrera,

Regional Director, San Francisco Regional Office.

[FR Doc. 94–11915 Filed 5–16–94; 8:45 am]

BILLING CODE 3510–21–M

National Oceanic and Atmospheric Administration

[I.D. 042694C]

Marine Mammals

AGENCY: National Marine Fisheries Service (NMFS), National Oceanic and Atmospheric Administration (NOAA), Commerce.

ACTION: Issuance of scientific research permit No. 915

SUMMARY: Notice is hereby given that Mr. Michael T. Williams, University of Alaska Fairbanks, Department of Biology and Wildlife, 417 Irving Building, Fairbanks, AK, 99775, has been issued a permit to take northern fur seals (*Callorhinus ursinus*) for purposes of scientific research.

ADDRESSES: The permit and related documents are available for review upon written request or by appointment in the following offices:

Permits Division, Office of Protected Resources, NMFS, 1315 East-West Highway, Silver Spring, MD 20910 (301/713–2289);

Alaska Region, NMFS, P.O. Box 21668, Juneau, AK 99802 (907/586–7221); and

Alaska Fisheries Science Center, National Marine Mammal Laboratory, 7600 Sand Point Way, NE, BIN C15700, Seattle, WA 98115 (206/526–4020).

SUPPLEMENTARY INFORMATION: On March 22, 1994, notice was published in the **Federal Register** (59 FR 13475) that a request for a scientific research permit to take Northern fur seals had been submitted by the above-named individual. The requested permit has been issued under the authority of the Marine Mammal Protection Act of 1972, as amended (16 U.S.C. 1361 *et seq.*), the Regulations Governing the Taking and Importing of Marine Mammals (50 CFR part 216), the Fur Seal Act of 1966, as amended (16 U.S.C. 1151 *et seq.*), and the fur seal regulations (50 CFR part 215).

The Permit authorizes the Holder to harass up to 200 Northern fur seals during observation of behaviors during aircraft overflights in St. George Island.

Dated: May 11, 1994.

Herbert W. Kaufman

Deputy Director, Office of Protected Resources, National Marine Fisheries Service.

[FR Doc. 94–11916 Filed 5–16–94; 8:45 am]

BILLING CODE 3510–22–F

CONSUMER PRODUCT SAFETY COMMISSION

[CPSC Docket No. 94–C0011]

PCA Apparel Industries, INC., a Corporation; Provisional Acceptance of a Settlement Agreement and Order

AGENCY: Consumer Product Safety Commission.

ACTION: Provisional Acceptance of a Settlement Agreement under the Flammable Fabrics Act.

SUMMARY: It is the policy of the Commission to publish settlements which it provisionally accepts under the Flammable Fabrics Act in the **Federal Register** in accordance with the terms of 16 CFR part 1605. Published below is a provisionally accepted Settlement Agreement with, PCA Apparel Industries, Inc., a corporation.

DATES: Any interested person may ask the Commission not to accept this agreement or otherwise comment on its contents by filing a written request with the Office of the Secretary by June 1, 1994.

ADDRESSES: Persons wishing to comment on this Settlement Agreement should send written comments to the Comment 94–C0011, Office of the Secretary, Consumer Product Safety Commission, Washington, DC 20207.

FOR FURTHER INFORMATION CONTACT: Eric L. Stone, Trial Attorney, Office of Compliance and Enforcement, Consumer Product Safety Commission, Washington, DC 20207; telephone (301) 504–0626.

SUPPLEMENTARY INFORMATION: See below.

Dated: May 11, 1994.

Sheldon D. Butts,

Deputy Secretary.

Consent Order Agreement

PCA Apparel Industries, Inc. ("PCA" or "Respondent") enters into this Consent Order Agreement with the staff ("the staff") of the Consumer Product Safety Commission ("the Commission") pursuant to the procedures set forth in § 1605.13 of the Commission's Procedures for Investigations, Inspections, and Inquiries under the Flammable Fabrics Act (FFA), 16 CFR 1605.

This Agreement and Order are for the sole purpose of settling allegations of the staff that Respondent sold children's sleepwear that failed to comply with the Standard for the Flammability of Children's Sleepwear: Sizes 0 through 6X and Standard for the Flammability of Children's Sleepwear: Sizes 7 through 14, 16 CFR parts 1615 and 1616 ("the sleepwear standards").

Respondent and the Staff Agree

1. The Consumer Product Safety Commission is an independent regulatory agency of the United States government. The Commission has jurisdiction over this matter under the Consumer Product Safety Act, 15 U.S.C. 2051 *et seq.* (CPSA), the Flammable Fabrics Act, 15 U.S.C. 1191 *et seq.* (FFA) and the Federal Trade Commission Act (15 U.S.C. 41 *et seq.* (FTCA).

2. Respondent PCA is a corporation organized and existing under the laws of the State of New York with principle corporate offices at 16 East 34th Street, New York, New York 10016.

3. Respondent is now, and has been engaged in one of more of the following activities: the manufacture for sale, the sale, or the offering for sale, in commerce, or the importation, delivery for introduction, transportation in commerce, or the sale or delivery after sale or shipment in commerce, of children's sleepwear subject to the sleepwear standards.

4. This Agreement is for the purpose of settling the allegations in the accompanying Complaint. This Agreement does not constitute an admission by Respondent that it knowingly violated the law. Nor does this Agreement constitute an admission by Respondent that it is paying a civil penalty as it is Respondent's position that it is paying the amount referenced in paragraph 7, hereof, to settle the Commission's contention that a civil penalty is appropriate. The Agreement becomes effective only upon its final acceptance by the Commission and service of the incorporated Order upon Respondent.

5. The parties agree this Consent Order Agreement resolves the allegations of the Complaint and the Commission shall not initiate any other criminal, civil or administrative action against the firm for those alleged violations based on the information currently known to the staff.

6. Respondent waives any rights to a formal hearing, and any findings of fact and conclusions of law regarding the allegations set forth in the Complaint. Respondent waives any right to seek judicial review or otherwise challenge

or contest the validity of the Commission's Order.

7. Respondent will pay a civil penalty in the amount of seventy-five thousand dollars ($75,000) to the United States Treasury in three (3) installment payments of twenty-five thousand dollars ($25,000.00) each, over a 12 month period commencing within twenty (20) days after service of the Final Order of the Commission accepting this Consent Order Agreement. Respondent shall pay the second installment of $25,000.00 within 120 days after service of the Final Order; and the third and final installment of $25,000.00 within 365 days after service of the Final Order.

8. The Commission may disclose the terms of this Consent Order Agreement to the public consistent with section 6(b) of the CPSA.

9. This Agreement and the Complaint accompanying the Agreement may be used in interpreting the Order. Agreements, understanding, representations or interpretations made outside of this Consent Order Agreement may not be used to vary or contradict its terms.

Upon acceptance of this Agreement, the Commission shall issue the following Order:

Order

I.

It is hereby ordered that Respondent, its successors and assigns, agents, representatives, and employees, directly or through any corporation, subsidiary, division, or other business entity, or through any agency, device or instrumentality, do forthwith cease and desist from selling or offering for sale, in commerce, or manufacturing for sale, in commerce, or importing into the United States or introducing, delivering for introduction, transporting or causing to be transported, in commerce, or selling or delivering after sale or shipment in commerce, any item of children's sleepwear with trim that fails to comply with the flammability requirements with respect to trim of the Standard for the Flammability of Children's Sleepwear: Sizes 0 through 6X, 16 CFR 1615.4(d)(2)(ii); or the Standard for the Flammability of Children's Sleepwear: Sizes 7 through 14, 16 CFR 1616.4(c)(2)(ii)

II.

It is further ordered that Respondent shall conduct all prototype testing, and maintain all records for sleepwear with trim required by the Standard for the Flammability of Children's Sleepwear: Sizes 0 through 6X, 16 CFR 1615.31(e)(iii); and the Standard for the Flammability of Children's Sleepwear: Sizes 7 through 14, 16 CFR 1616.31(d)(iii).

III.

It is further ordered that Respondent pay to the United States Treasury a civil penalty of $75,000 in three (3) installment payment of twenty-five thousand dollars ($25,000.00) each, over a 12 month period commencing within twenty (20) days after service upon Respondent of the Final Order in this matter. Respondent shall pay the second installment of $25,000.00 within 120 days after service of the Final Order; and the third and final installment of $25,000.00 within 365 days after service of the Final Order.

IV.

It is further ordered that for a period of three years following the service upon Respondent of the Final Order in this matter, Respondent notify the Commission within 30 days following the consummation of the sale of a majority of its stock or following a change in any of its corporate officers responsible for compliance with the terms of this Consent Agreement and Order.

Dated: March 16, 1994.

Marvin J. Sandberg,

Vice President, Finance, on behalf of PCA Apparel Industries, Inc., 16 East 34th Street, New York, NY 10016.

Dated: March 30, 1994.

Eric L. Stone,

Trial Attorney, Division of Administrative Litigation.

Alan H. Schoem,

Director, Division of Administrative Litigation.

David Schmeltzer,

Assistant Executive Director, Office of Compliance and Enforcement, Consumer Product Safety Commission, Washington, DC 20207.

By direction of the Commission, this Consent Order Agreement is provisionally accepted pursuant to 16 CFR 1605.13, and shall be placed on the public record, and the Secretary is directed to publish the provisional acceptance of the Consent Order Agreement in the Commission's Public Calendar and in the **Federal Register.**

So ordered by the Commission, this 11th day of May, 1994.

Sadye E. Dunn,

Secretary, Consumer Product Safety Commission.

[FR Doc. 94–11973 Filed 5–16–94; 8:45 am]

BILLING CODE 6355–01–M

DEPARTMENT OF DEFENSE

Office of the Secretary of Defense

Privacy Act of 1974; Notice to Amend Record Systems

AGENCY: Office of the Secretary of Defense, DOD.

ACTION: Notice to amend record systems.

SUMMARY: The Office of the Secretary of Defense proposes to amend one system of records notice to its inventory of record systems subject to the Privacy Act of 1974 (5 U.S.C. 552a), as amended.

DATES: The amendments will be effective on June 16, 1994, unless comments are received that would result in a contrary determination.

ADDRESSES: Send comments to Chief, Records Management and Privacy Act Branch, Washington Headquarter Services, Correspondence and Directives, Records Management Division, 1155 Defense Pentagon, Washington, DC 20301–1155.

FOR FURTHER INFORMATION CONTACT: Mr. Dan Cragg at (703) 695–0970 or DSN 225–0970.

SUPPLEMENTARY INFORMATION: The Office of the Secretary of Defense notices for systems of records subject to the Privacy Act of 1974 (5 U.S.C. 552a), as amended, have been published in the **Federal Register** and are available from the address above.

The proposed amendment is not within the purview of subsection (r) of the Privacy Act (5 U.S.C. 552a), as amended, which would require the submission of a new or altered system report for each system. The specific changes to the record system being amended are set forth below followed by the notice, as amended, published in its entirety.

Dated: May 5, 1994.

Patricia L. Toppings,

Alternate OSD Federal Register Liaison Officer, Department of Defense.

DATSD 03

SYSTEM NAME:

Files of Personnel Evaluated for Non-Career Employment in DoD *(February 22, 1993, 58 FR 10231).*

CHANGES:

* * * * *

SYSTEM LOCATION:

Delete entry and replace with 'The Special Assistant to the Secretary of Defense for Personnel, 1000 Defense Pentagon, Washington, DC 20301–1000.

A subset of this system is maintained by the Special Assistant to the Secretary of Defense for White House Liaison, 1000 Defense Pentagon, Washington, DC 20301–1000.'

CATEGORIES OF INDIVIDUALS COVERED BY THE SYSTEM:

Delete entry and replace with 'Appointments to political positions in DoD, consisting of non-career Senior Executive Service (SES), Schedule 'C', and appointments requiring Senate Confirmation, i.e., Presidential Appointed Schedule positions.'

CATEGORIES OF RECORDS IN THE SYSTEM:

Delete entry and replace with 'Files consist of referral letters, resumes, SF 171s, position descriptions, White House clearance letters, OPM Certifications, and other correspondence relating to the selection and appointment of political appointees.'

* * * * *

PURPOSE(S):

Delete entry and replace with 'Records are collected to evaluate qualifications of individuals seeking or who have been recommended for non-career positions within DoD. Files are used by authorized personnel within the immediate Office of the Secretary of Defense to fill vacant political positions.'

* * * * *

STORAGE:

Delete entry and replace with 'Correspondence and forms in file folders.'

RETRIEVABILITY:

Delete second sentence.

SAFEGUARDS:

Following first sentence, delete remainder of entry and replace with 'Sensitive data is kept in locked cabinets or safes and may be accessed only by authorized personnel.'

RETENTION AND DISPOSAL:

Delete entry and replace with 'Destroy at the end of the Presidential administration during which the individual is hired, or when no longer needed, whichever is sooner, except that in lieu of destruction, certain pertinent documents may be offered to OSD Personnel and Security for inclusion in the individual's Official Personnel Folder.'

SYSTEM MANAGER(S) AND ADDRESS:

Delete entry and replace with 'The Special Assistant to the Secretary of Defense for Personnel, 1000 Defense Pentagon, Washington, DC 20301–1000.'

NOTIFICATION PROCEDURE:

Following 'inquiries to' insert 'The Special Assistant to the Secretary of Defense for Personnel, 1000 Defense Pentagon, Washington, DC 20301–1000.' Delete the remainder of the first sentence.

Replace second paragraph with 'Requests for information should contain the full name of the individual and Social Security Number.'

RECORD ACCESS PROCEDURES:

Following 'inquiries to' insert 'The Special Assistant to the Secretary of Defense for Personnel, 1000 Defense Pentagon, Washington, DC 20301–1000.' Delete the remainder of the sentence.

* * * * *

RECORD SOURCE CATEGORIES:

Delete entry and replace with 'Submitted by individuals seeking non-career positions, or referred by others on behalf of individuals seeking such positions. White House and Office of Personnel Management for clearance documents and other correspondence. From other sources for records relating to the qualifications and professional accomplishments of individual candidates.'

* * * * *

DATSD 03

SYSTEM NAME:

Files of Personnel Evaluated for Non-Career Employment in DOD.

SYSTEM LOCATION:

The Special Assistant to the Secretary of Defense for Personnel, 1000 Defense Pentagon, Washington, DC 20301–1000.

A subset of this system is maintained by the Special Assistant to the Secretary of Defense for White House Liaison, 1000 Defense Pentagon, Washington, DC 20301–1000.

CATEGORIES OF INDIVIDUALS COVERED BY THE SYSTEM:

Appointments to political positions in DoD, consisting of non-career Senior Executive Service (SES), Schedule 'C', and appointments requiring Senate Confirmation, i.e., Presidential Appointed Schedule positions.

CATEGORIES OF RECORDS IN THE SYSTEM:

Files consist of referral letters, resumes, SF 171s, position descriptions, White House clearance letters, OPM Certifications, and other correspondence relating to the selection and appointment of political appointees.

AUTHORITY FOR MAINTENANCE OF THE SYSTEM:

10 U.S.C. 133 and E.O. 9397.

PURPOSE(S):

Records are collected to evaluate qualifications of individuals seeking or who have been recommended for non-career positions within DoD. Files are used by authorized personnel within the immediate Office of the Secretary of Defense to fill vacant political positions.

ROUTINE USES OF RECORDS MAINTAINED IN THE SYSTEM, INCLUDING CATEGORIES OF USERS AND THE PURPOSES OF SUCH USES:

In addition to those disclosures generally permitted under 5 U.S.C. 552a(b) of the Privacy Act, these records or information contained therein may specifically be disclosed outside the DoD as a routine use pursuant to 5 U.S.C. 552a(b)(3) as follows:

The 'Blanket Routine Uses' set forth at the beginning of OSD's compilation of systems of records notices apply to this system.

POLICIES AND PRACTICES FOR STORING, RETRIEVING, ACCESSING, RETAINING, AND DISPOSING OF RECORDS IN THE SYSTEM:

STORAGE:

Correspondence and forms in file folders.

RETRIEVABILITY:

Information accessed by last name of individual and Social Security Number.

SAFEGUARDS:

Building employs security guards. Sensitive data is kept in locked cabinets or safes and may be accessed only by authorized personnel.

RETENTION AND DISPOSAL:

Destroy at the end of the Presidential administration during which the individual is hired, or when no longer needed, whichever is sooner, except that in lieu of destruction, certain pertinent documents may be offered to OSD Personnel and Security for inclusion in the individual's Official Personnel Folder.

SYSTEM MANAGER(S) AND ADDRESS:

The Special Assistant to the Secretary of Defense for Personnel, 1000 Defense Pentagon, Washington, DC 20301–1000.

NOTIFICATION PROCEDURE:

Individuals seeking to determine whether information about themselves is contained in this system should address written inquiries to The Special Assistant to the Secretary of Defense for Personnel, 1000 Defense Pentagon, Washington, DC 20301–1000.

Requests for information should contain the full name of the individual and social security number.

RECORD ACCESS PROCEDURES:

Individuals seeking access to information about themselves contained in this system should address written inquiries to The Special Assistant to the Secretary of Defense for Personnel, 1000 Defense Pentagon, Washington, DC 20301–1000.

Requests for information should contain the full name of the individual and Social Security Number.

CONTESTING RECORD PROCEDURES:

The OSD's rules for accessing records, contesting contents and appealing initial agency determinations are contained in OSD Administrative Instruction 81; 32 CFR part 311; or may be obtained from the system manager.

RECORD SOURCE CATEGORIES:

Submitted by individuals seeking non-career positions, or referred by others on behalf of individuals seeking such positions. White House and Office of Personnel Management for clearance documents and other correspondence. From other sources for records relating to the qualifications and professional accomplishments of individual candidates.

EXEMPTIONS CLAIMED FOR THE SYSTEM:

None.

[FR Doc. 94–11876 Filed 05–16–94; 8:45 am]

BILLING CODE 5000–04–F

Proposed changes to U.S. Court of Military Appeals Rule

ACTION: Notice of Proposed Changes to the Rules of Practice and Procedure of the United States Court of Military Appeals.

SUMMARY: This notice announces the following proposed changes (underlined) to Rule 6 and to Rule 21(d) and (e) of the Rules of Practice and Procedure, United States Court of Military Appeals for public notice and comment:

Rule 6. Quorum

(a) *A majority of the judges in regular active service authorized to constitute the United States Court of Military Appeals* shall constitute a quorum. The concurrence of the *majority of such judges, whether present and voting or voting telephonically or electronically,* shall be required for a final resolution of any matter before the Court, subject to subsections (b) and (c). *In the event there are fewer than three active judges, such active judges shall constitute a quorum.* 10 USC § 943.

(b) *The Chief Judge, or the judge performing the duties of the Chief Judge, shall have the authority to issue temporary orders or stays pending the convening of a quorum. See* Rules 15(f) and 27(a)(4).

(c) If no judge is present, the Clerk may adjourn the Court from day to day. *See* Rule 9(d).

Rule 21. Supplement to Petition for Grant of Review

* * * * *

(d) If no specific errors are assigned in the supplement to the petition, the *Clerk will enter an order dismissing the case without awaiting an answer, and the Court will not call for an answer or examine the record. In all other cases, the Court may, in its discretion, examine the record for the purpose of determining whether there is plain error not assigned by the appellant.*

(e) [To be deleted.]

(f) [To be renumbered as (e)] An appellant or counsel for an appellant may move to withdraw his petition at any time. *See* Rule 30.

DATES: Comments on the proposed changes must be received by July 18, 1994.

ADDRESSES: Forward written comments to Thomas F. Granahan, Clerk of Court, United States Court of Military Appeals, 450 E. Street, Northwest, Washington, DC 20442–0001.

FOR FURTHER INFORMATION CONTACT: Thomas F. Granahan, Clerk of Court, telephone (202) 272–1448 (x600).

SUPPLEMENTARY INFORMATION: The Court has promulgated the new Rule 6 (Quorum) as an Interim Rule Change. The Rules Advisory Committee Report on proposed changes to Rule 21(d) is included as an attachment to this notice.

Majority Report on Proposed Rule 21(d)

This is to advise the Court that, by a vote of six to five, the Rules Advisory Committee of this Court recommends that Rule 21(d) of the Rules of this Court be revised to read as follows:

If no specific errors are assigned in the supplement to the petition, the Clerk will enter an order dismissing the case without awaiting an answer, and the Court will not call for an answer or examine the record. In all other cases, the Court may, in its discretion, examine the record for the purpose of determining whether there is plain error not assigned by the appellant.

In addition, Rule 21(e) should be deleted and Rule 21(f) should be renumbered as Rule 21(e).

The purpose of this recommended change is to end the Court's current practice of docketing petition supplements that allege no issues warranting review and then conducting an examination of the record in these cases to determine whether any basis may exist in the record meriting further consideration by the Court. A number of factors support our recommendation.

First, and most fundamentally, the Court's current practice of reviewing, *sua sponte,* cases coming to the Court on petition for review in which no error is alleged by the accused is simply incompatible with the Court's statutory charter. Article 67(a)(3) of the Uniform Code of Military Justice, UCMJ, 10 U.S.C. 867(a)(3), directs that this Court will review the record "in all cases reviewed by a Court of Military Review * * * upon petition of the accused and *on good cause shown* * * *." In drafting Article 67 of the Code, Congress demonstrated that, when it wanted this Court to exercise its appellate jurisdiction without requiring particularized claims of error, Congress knew how to say so expressly. *See* Art. 67(a)(1), UCMJ, 10 U.S.C. 867(a)(1) (granting the Court jurisdiction to review the record in all cases in which the sentence, as affirmed by a Court of Military Review, extends to death); former Art. 67(a)(3), UCMJ, 10 U.S.C. 867(a)(3) (Court of Military Appeals shall review the record in all cases involving flag and general officers). The clear implication of the fact that, by contrast with these provisions, Congress included the requirement of a showing of "good cause" in Article 67(a)(3) is that Congress did not intend for this Court *sua sponte* to review the record in cases involving petitions by servicemembers from judgments of the courts of military review.

It has been argued by the members of the Rules Advisory Committee in the minority that this Court's practice of conducting *sua sponte* review of "no issue" petitions is now so well established that Congress has come to expect that this Court will perform that function. The majority finds mistaken the view that Congress can legislate by acquiescence. If Congress intended for this Court to adhere to such a practice, Congress would have expressed that intent in positive law on one of the numerous occasions on which it amended the Code within the last few decades. Absent such a clear expression of legislative intent, this Court does not believe that it lacks the power to revise its internal procedures in order to conform them to its clear statutory mandate.

Second, the Court's practice in conducting *sua sponte* reviews of "no issue" petitions is at odds with the practice of every other appellate court in the federal judicial system, all of which require litigants to present with particularity alleged claims of error. *See, e.g.,* S.Ct.R. 21.1(a) (the petition for writ of certiorari shall contain "[t]he questions presented for review, expressed in the terms and circumstances of the case but without unnecessary detail"); Fed.R.App. P. 28(a)(3); First Cir. R. 28 (incorporating

Fed. R. App. P. 28); Second Cir. R. 28 (same); Third Cir. R. 21(d); Fifth Cir. R. 28.3. We are informed by the Office of the Clerk of the Supreme Court that it will not even docket petitions for writs of certiorari that do not present any issues for review. Persistence in this Court's past practice isolates this Court from the mainstream of federal appellate practice and creates the perception that the Court is not truly performing a comparable judicial function but, rather, serves as an inspector general for the military justice system. As Justice (then Judge) Scalia observed in *Carducci* versus *Regan*, 714 F.2d 171, 177 (D.C. Cir. 1983), "[t]he premise of our adversarial system is that appellate courts do not sit as self-directed boards of legal inquiry and research, but essentially as arbiters of legal questions presented and argued by the parties before them."

Those who disagree with our views maintain that, in the context of the armed forces, a different practice from that of the federal judicial system governing civilians is warranted because review by a court composed of civilians ensures and creates the perception that members of the armed forces are being treated fairly by the military justice system. As we explain later, however, other safeguards—including the possibility of Supreme Court review—are more than sufficient to minimize the likelihood that a member of the armed forces will be treated in a manner that is incompatible with accepted standards of justice and also to eliminate the perception that the military justice system is less fair than its civilian counterparts to those who stand accused of crime.

Third, ending the practice of entertaining "no issue" petitions will have the salutary effect of eliminating any risk that defense counsel will rely on this Court to identify legal or factual issues that could be resolved in the servicemember's favor, instead of fully canvassing the record to make that determination. The burden of reviewing the record to ensure that a servicemember has received a fair trial properly rests with defense counsel, not with this Court. The proposed rule change reinforces that well-settled principle, while also enabling this Court to perform its role as the arbiter of the legal matters that have been properly brought before the Court for resolution.

Fourth, eliminating the practice of entertaining "no issue" petitions will substantially reduce the workload of this Court's legal staff. We are informed by the Director of this Court's central legal staff, that prior to the recent (and near universal) asserting of constitutional challenges to the selection and assignment of judges in the military justice system, "no issue" cases comprised between 80 and 85 percent of all cases filed with this Court. In response to a query by members of this Committee, the Director estimated that elimination of the practice of reviewing "no issue" cases would reduce the staff's workload by as much as 80 percent, although it is not clear precisely what the net reduction would be. The resulting savings would permit the limited resources of the central legal staff to be directed to cases in which the issues have been identified by the parties through the adversarial process. This will promote the issuance of timely, well-reasoned decisions by this Court.

Fifth, the reasons that appear to have prompted the adoption of the practice of conducting *sua sponte* reviews of "no issue" cases no longer exist. The Director of the Court's central legal staff informed us that the practice began when, shortly after this Court was established, one of the Judge Advocates General stated that he intended to control the cases sent to this Court for its review. In addition, the practice was designed as a check on military appellate counsel, who were frequently perceived to be inexperienced, and as a mechanism to ensure that servicemembers received the benefit of review by a civilian court.

It is highly unlikely that today any of the Judge Advocates General would attempt to restrict the questions presented to this Court by defense appellate counsel, or that the Judge Advocates General could effectively accomplish that end even if they desired to do so. Moreover, the existence of separate defense corps in each branch of the armed forces, as well as independent trial and appellate judiciaries, who are insulated by statute from improper command influence, substantially reduces the risk of any perception that the due process rights of servicemembers can only effectively be protected by a civilian review of courts-martial. Finally, the experience of military appellate counsel, who are all specialists in criminal appeals, is, at least, comparable to that of public defenders in the federal or state systems. And, by contrast to the typical situation in public defender's offices, military appellate counsel are closely supervised in their representational decisions by field grade officers of the Judge Advocate General's Corps who are invariably highly experienced criminal lawyers.

The Committee members submitting this Majority Report are as follows: Professor Mary M. Cheh; John F. DePue, Esquire; Eugene R. Fidell, Esquire (Chairman); Professor Steven H. Goldblatt; COL Jeffrey T. Infelise, USAF; and Paul J. Larkin, Jr., Esquire.

Minority Report on Proposed Rule 21(d)

Six members of the Court's Rules Advisory Committee have voted to recommend a change to Rule 21(d) of the Court's Rules which would direct the Clerk of the Court to dismiss, without answer or consideration by the judges, any petition for grant of review submitted by an accused which had no specific errors assigned in the supplement filed by counsel. The stated purpose of this recommended change is to end the Court's practice of docketing petition supplements that allege no issues warranting review and then conducting an examination of the record in such cases to determine whether any basis may exist in the record meriting further consideration by the Court.

The following five members of the Rules Advisory Committee are opposed to this change: Joseph H. Baum, Chief Judge, U.S. Coast Guard Court of Military Review; William S. Fulton, Jr., Clerk of the U.S. Army Court of Military Review; Thomas F. Granahan, Clerk of the U.S. Court of Military Appeals; F. Whitten Peters, Williams & Connolly; and CDR Timothy C. Young, USN, Director, Appellate Defense Division, Navy-Marine Corps Appellate Review Activity.

By way of background, we are today seeing the military justice system at the highest state of its development in its long history. We know it to be a fair system, seemingly in the hands of carefully-selected, well-trained lawyers and judges in adequate numbers in all services and courts, and we believe administration of the system has reached its highest level of competence ever.

Nevertheless, the military justice system is always in danger, both from without and within. From the outside it traditionally appears to be a system of justice that is subject to the control of prosecutorial decisions and outcomes by the command structure of the service involved. Accordingly, no matter what the conditions in today's all-volunteer, relatively peacetime forces, the military justice system must be prepared to meet the suspicions of the families of far greater numbers of servicemembers, perhaps serving involuntarily, and of the Congress, which holds the fate of the UCMJ in its hands.

From the inside, the military justice system always faces a less visible challenge; namely, the impact of

budgetary and manpower exigencies on the quality of representation and adjudication. Judge Advocate Generals must compete with others for personnel spaces and money. They don't always win. In short, there is command control, albeit indirect and unintended, over the number of lawyers available (outside factors affect the quality of recruits) and over the funds for educating lawyers and judges and for their continuing training. Even within the sphere of the Judge Advocate Generals, choices must be made as to the assets and efforts to be devoted to various branches of the law, of which military justice is but one.

Those are the reasons why military justice always has had some features we call paternalism. Those are the reasons why we assert that, notwithstanding the triumph of legal professionalism over paternalism reflected in Code and Manual changes and judicial decisions in the last 20 years, some vestiges of paternalism must remain. We regard Rule 21(d) as one of them so long as it does not cause delays that adversely affect justice in other cases.

In addition to those reasons set forth above, the five factors cited by the majority as supporting the recommended rule change will be addressed below.

First Factor. The majority sees the Court's forty-year practice of examining the record in every petitioned case to determine whether good cause exists for further review to be incompatible with Article 67(a)(3), UCMJ. We disagree. Article 67(a)(3) states that: "The Court of Military Appeals shall review the record in * * * all cases reviewed by a Court of Military Review in which, upon petition of the accused and on good cause shown, the Court of Military Appeals has granted a review."

In viewing the Court's practice as contrary to the statute, the majority undoubtedly interprets the phrase "on good cause shown" to mean that good cause must be shown by the accused before the Court may grant review. That interpretation, in our view, is much too narrow. The Court from its inception appears to have seen "good cause shown" as meaning good cause shown by the record. We believe that interpretation to be more reasonable and more in accord with the Congressional grant of discretionary review to this first-time civilian court, created to oversee the military's court-martial system and to protect the rights of the military accused.

In any event, Congress, by its failure to indicate otherwise for over forty years of active oversight of military justice, has accepted the Court's interpretation of the statute as correct. Rather than legislation by acquiescence, as the majority asserts, the inaction of Congress on this matter is simply an affirmation by that body that the law is being applied properly. Accordingly, we believe a change of this magnitude which departs from long-standing interpretation and application of the law, while arguably within the Court's authority to effect as simply a procedural rule change, should more appropriately come from Congress.

With respect to statutory requirements, the majority cites the contrast between the originally drafted mandatory review provisions of Article 67 (death penalty, flag and general officers) and Article 67(a)(3), with its "on good cause shown" phrase, as implying that Congress did not intend the Court to review a case *sua sponte*. The majority mischaracterizes the Court's process as *sua sponte* review. There are only three provisions under Article 67 pertaining to review of a record by the Court, two that make review mandatory—death penalty cases and those cases ordered sent to the Court by the Judge Advocate General—and one that allows discretionary review, upon petition by the accused.

The Court does not have the power to go beyond these three Congressional grants and order a case reviewed on its own initiative. To do so would be truly *sua sponte* review, which is not the situation before us. For that reason we believe it incorrect to term the Court's grant of a petition for review as *sua sponte* review. In any event, the contrast between the provisions calling for mandatory review and the one granting discretionary review, upon petition by the accused, does not reflect an intent by Congress to limit the Court's discretionary review authority to only those cases in which the accused has demonstrated good cause. If an accused petitions for review and the Court finds good cause for such review, the statute is satisfied.

Second Factor. The majority says the Court's procedure is at odds with the practice of every other appellate court in the federal judicial system. If so, there is ample reason for this difference. The military is a closed society with rigorous disciplinary demands and severe limitations on individual rights and freedoms that call for special protections. Furthermore, when needed, individuals have been conscripted to serve in this society, calling for even more protective oversight. To some extent, the majority acknowledges these concerns, but points to other safeguards, including Supreme Court review, as minimizing the likelihood that a member of the armed forces will be treated unfairly or contrary to accepted standards of justice.

In making this argument, the majority overlooks the fact that Congress has authorized the Supreme Court to review only those cases in which the Court of Military Appeals has granted an accused's petition for review. As a result, the proposed rule change calling for automatic dismissal by the Clerk of an accused's petition for review forecloses any possible opportunity for subsequent review by the Supreme Court. The proposed rule thereby denies the accused the very protection cited by the majority in support of the rule change.

Third Factor. The majority focuses on the salutary effect the new rule will have on the professional standards for defense counsel, requiring, as it will, that counsel meet their responsibility to review the record fully for errors. We agree with the premise that Court actions calling for counsel to meet professional standards are salutary. However, we believe there are other means available to the Court for achieving this goal that are just as effective, or more so, without penalizing the accused, as the proposed rule will do. In addition, we view the proposed rule as drafted to created a substantial question as to whether the Clerk is required to dismiss a case in which the only matter presented in the supplement was a *Grostefon* assertion by the accused.

Fourth Factor. The majority says that the new rule will result in savings of central legal staff resources from a workload reduction of as much as 80 percent. Suffice it to say that we did not draw the same conclusion from what was said by the Director of the Central Legal Staff when he appeared before the committee. Our recollection is that he saw a minimal reduction in work from the rule change of not more than 10 percent. If so, there appears to be little need for such a rule from a work-savings standpoint.

Fifth Factor. The last point made by the majority is that the reasons for the current practice, while possibly valid forty years ago, are no longer a matter of concern. In answer, we must say that the potential for abuse is still inherent in the system, and that such potential requires constant vigilance. Over the years, this fact has been demonstrated time and time again. The problem of overreaching and undue influence by command authority will always be a possibility that necessitates an unimpeded oversight by the Court of Military Appeals. The procedure that has been in place for over 40 years

appears to be working well in that regard and we see no need for a change.

We conclude by urging the Court to reject the proposed change to Rule 21(d).

Dated: May 12, 1994.

L.M. Bynum,

Alternate OSD Federal Register Liaison Officer, Department of Defense.

[FR Doc. 94–11937 Filed 5–16–94; 8:45 am]

BILLING CODE 5000–04–M

Department of the Air Force

Privacy Act of 1974; Amend System of Records

AGENCY: Department of the Air Force, DOD.

ACTION: Amend system of records.

SUMMARY: The Department of the Air Force proposes to amend one system of records notice to its inventory of systems of records notices subject to the Privacy Act of 1974 (5 U.S.C. 552a), as amended.

DATES: The amendment will be effective on June 16, 1994, unless comments are received that would result in a contrary determination.

ADDRESSES: Send comments to the Assistant Air Force Access Programs Officer, SAF/AAIA, 1610 Air Force Pentagon, Washington, DC 20330–1610.

FOR FURTHER INFORMATION CONTACT: Mr. Jim Gibson at (703) 697–3491 or DSN 227–3491.

SUPPLEMENTARY INFORMATION: The complete inventory of Department of the Air Force system of records notices subject to the Privacy Act of 1974 (5 U.S.C. 552a), as amended, have been published in the **Federal Register** and are available from the address above.

The amendment is not within the purview of subsection (r) of the Privacy Act (5 U.S.C. 552a), as amended, which requires the submission of an altered system report. The specific changes to the system of records notice is set forth below followed by the system notice, as amended, published in its entirety.

Dated: May 5, 1994.

Patricia L. Toppings,

Alternate OSD Federal Register Liaison Officer, Department of Defense.

F035 MPC K

SYSTEM NAME:

Airman Promotion Historical Records *(February 22, 1993, 58 FR 10362).*

CHANGES:

* * * * *

SYSTEM NAME:

Delete entry and replace with 'Promotion Documents/Records Tracking (PRODART) and Airman Promotion Historical Records (APHR) System.'

SYSTEM LOCATION:

Delete entry and replace with 'Promotion Documents/Records Tracking (PRODART) files are maintained in the Board Support Branch, Headquarters Air Force Military Personnel Center, 550 C Street W, Randolph Air Force Base, TX 78150–4703.

Airman Promotion Historical Records (APHR) are maintained in the Airman Promotion Branch, Selection Board Secretariat, Headquarters Air Force Military Personnel Center, 550 C Street W, Randolph Air Force Base, TX 78150–4703.'

CATEGORIES OF INDIVIDUALS COVERED BY THE SYSTEM:

Delete entry and replace with 'PRODART: Air Force active duty enlisted personnel in the grade of E–7 and E–8 and active duty officers in grades O–1 through O–5.

APHR: Active duty airmen in grade E–4 through E–8 at time of promotion consideration.'

CATEGORIES OF RECORDS IN THE SYSTEM:

Delete entry and replace with 'PRODART portion of this system is made up of six files: Active duty enlisted file, active duty officer file, document/record required, document/record receipt file, selection board eligibility file, and derogatory information file. These files contain name, Social Security Number, grade data, service data, and selection board eligibility data.

APHR records consist of Microfiche files reflecting individual historical promotion data for a specific cycle which is no longer maintained within the automated personnel data system. Contains member identification, promotion eligibility status, select/nonselect status, and critical personnel data. Microfiche files for members in grades E–4 through E–6 contain relative standing and weighted factor scores. Contains work sheets used to manually compute individual promotion status (select/nonselect) for the Weighted Airman Promotion System for those members not considered during the computerized selection process; master listings for each specified promotion cycle reflecting all members in the applicable grade and their specific status: Select, nonselect, nonweighable, or ineligible; and listing of promotion sequence numbers assigned to all selectees for a specific cycle.'

AUTHORITY FOR MAINTENANCE OF THE SYSTEM:

Delete entry and replace with '10 U.S.C. 8013, Secretary of the Air Force: Powers and duties; delegation by; as implemented by Air Force Instruction 36–2608, Military Personnel Records Systems; Air Force Instruction 36–2402, Officer Evaluation System; Air Force Instruction 36–2403, Enlisted Evaluation System; Air Force Manual 36–2622, Base Level Military Personnel System; Air Force Instruction 36–2502, Promotion of Airmen, and E.O. 9397.'

PURPOSE(S):

Delete entry and replace with 'Records technicians use the PRODART system to identify documents missing from the United States Air Force Selection Records Group and to account for documents received. Personnel technician use system to produce statistical digest data for management analysis functions.

The AHPR are used by Promotion Branch as the master record of promotion status for a specified cycle. Used to respond to inquiries (including congressional inquiries), for Air Staff advisories to the Air Force Board for Correction of Military Records, to manage the Airman Promotion Program, to recreate promotion status, and to provide statistical data for official use. Used to provide supplemental promotion consideration and to research and/or correct promotion status for a previous cycle.'

* * * * *

STORAGE:

Delete entry and replace with 'PRODART records are Maintained in file server.

APHR are maintained in visible file binders/cabinets, in computers and on computer output products, and on microfilm.'

RETRIEVABILITY:

Delete last sentence.

SAFEGUARDS:

Add to end of entry 'Those in computer storage devices are protected by computer system software.'

RETENTION AND DISPOSAL:

Delete entry and replace with 'PRODART records are maintained until member is selected for promotion to Chief Master Sergeant (E–9) or Colonel (0–6) or when member is no longer on active duty.

AHPR are maintained for 10 years, computed from the date of the original selection process. Manual computation

worksheets are maintained for one year and then select/nonselect data are listed on a roster which is maintained for an additional nine years. After the specified retention period, the records are destroyed by tearing into pieces, shredding, pulping, macerating, or burning. Computer records are destroyed by erasing, deleting or overwriting.'

SYSTEM MANAGER(S) AND ADDRESS:

Delete entry and replace with 'PRODART: Chief, Board Support Branch, Secretariat, Headquarters Air Force Military Personnel Center, 550 C Street W, Randolph Air Force Base, TX 78150–4703.

AHPR: Chief, Airman Promotion Branch, Selection Board Secretariat, Headquarters Air Force Military Personnel Center, 550 C Street W, Randolph Air Force Base, TX 78150–4703.'

NOTIFICATION PROCEDURE:

Delete entry and replace with 'Individuals seeking to determine whether this system of records contains information on themselves should address written inquiries to the Chief, Board Support Branch, Selection Board Secretariat, Headquarters Air Force Military Personnel Center, 550 C Street W, Randolph Air Force Base, TX 78150–4703 for PRODART records, or to the

Chief, Board Support Branch, Selection Board Secretariat, Headquarters Air Force Military Personnel Center, 550 C Street W, Randolph Air Force Base, TX 78150–4703 for AHPR records.'

RECORD ACCESS PROCEDURES:

Delete entry and replace with 'Individuals seeking to access records about themselves contained in this system should address written requests to the Chief, Board Support Branch, Selection Board Secretariat, Headquarters Air Force Military Personnel Center, 550 C Street W, Randolph Air Force Base, TX 78150–4703 for PRODART records, or to the

Chief, Board Support Branch, Selection Board Secretariat, Headquarters Air Force Military Personnel Center, 550 C Street W, Randolph Air Force Base, TX 78150–4703 for AHPR records.'

* * * * *

RECORD SOURCE CATEGORIES:

Delete entry and replace with 'PRODART data is extracted from the master personnel files.

AHPR data is extracted from the active interim eligible file (promotion file) which is a subsystem of the Personnel Data System.'

* * * * *

F035 MPC K

SYSTEM NAME:

Promotion Documents/Records Tracking (PRODART) and Airman Promotion Historical Records (APHR) System.

SYSTEM LOCATION:

Promotion Documents/Records Tracking (PRODART) files are maintained in the Board Support Branch, Headquarters Air Force Military Personnel Center, 550 C Street W, Randolph Air Force Base, TX 78150–4703.

Airman Promotion Historical Records (APHR) are maintained in the Airman Promotion Branch, Selection Board Secretariat, Headquarters Air Force Military Personnel Center, 550 C Street W, Randolph Air Force Base, TX 78150–4703.

CATEGORIES OF INDIVIDUALS COVERED BY THE SYSTEM:

PRODART: Air Force active duty enlisted personnel in the grade of E–7 and E–8 and active duty officers in grades O–1 through O–5.

APHR: Active duty airmen in grade E–4 through E–8 at time of promotion consideration.

CATEGORIES OF RECORDS IN THE SYSTEM:

PRODART portion of this system is made up of six files: Active duty enlisted file, active duty officer file, document/record required, document/record receipt file, selection board eligibility file, and derogatory information file. These files contain name, Social Security Number, grade data, service data, and selection board eligibility data.

APHR records consist of Microfiche files reflecting individual historical promotion data for a specific cycle which is no longer maintained within the automated personnel data system. Contains member identification, promotion eligibility status, select/nonselect status, and critical personnel data. Microfiche files for members in grades E–4 through E–6 contain relative standing and weighted factor scores. Contains worksheets used to manually compute individual promotion status (select/nonselect) for the Weighted Airman Promotion System for those members not considered during the computerized selection process; master listings for each specified promotion cycle reflecting all members in the applicable grade and their specific status: Select, nonselect, nonweighable, or ineligible; and listing of promotion sequence numbers assigned to all selectees for a specific cycle.

AUTHORITY FOR MAINTENANCE OF THE SYSTEM:

10 U.S.C. 8013, Secretary of the Air Force: Powers and duties; delegation by; as implemented by Air Force Instruction 36–2608, Military Personnel Records Systems; Air Force Instruction 36–2402, Officer Evaluation System; Air Force Instruction 36–2403, Enlisted Evaluation System; Air Force Manual 36–2622, Base Level Military Personnel System; Air Force Instruction 36–2502, Promotion of Airmen, and E.O. 9397.

PURPOSE(S):

Records technicians use the PRODART system to identify documents missing from the United States Air Force Selection Records Group and to account for documents received. Personnel technician use system to produce statistical digest data for management analysis functions.

The AHPR are used by Promotion Branch as the master record of promotion status for a specified cycle. Used to respond to inquiries (including congressional inquiries), for Air Staff advisories to the Air Force Board for Correction of Military Records, to manage the Airman Promotion Program, to recreate promotion status, and to provide statistical data for official use. Used to provide supplemental promotion consideration and to research and/or correct promotion status for a previous cycle.

ROUTINE USES OF RECORDS MAINTAINED IN THE SYSTEM, INCLUDING CATEGORIES OF USERS AND THE PURPOSES OF SUCH USES:

In addition to those disclosures generally permitted under 5 U.S.C. 552a(b) of the Privacy Act, these records or information contained therein may specifically be disclosed outside the DoD as a routine use pursuant to 5 U.S.C. 552a(b)(3) as follows:

The Department of the Air Force 'Blanket Routine Uses' published at the beginning of the Air Force's compilation of systems of records notices apply to this system.

POLICIES AND PRACTICES FOR STORING, RETRIEVING, ACCESSING, RETAINING, AND DISPOSING OF RECORDS IN THE SYSTEM:

STORAGE:

PRODART records are maintained in file server.

APHR are maintained in visible file binders/cabinets, in computers and on computer output products, and on microfilm.

RETRIEVABILITY:

Retrieved by name or Social Security Number.

SAFEGUARDS:

Records are accessed by custodian of the record system and by person(s) responsible for servicing the record system in performance of their official duties who are properly screened and cleared for need-to-know. Records are stored in locked cabinets or secured building. Those in computer storage devices are protected by computer system software.

RETENTION AND DISPOSAL:

PRODART records are maintained until member is selected for promotion to Chief Master Sergeant (E–9) or Colonel (0–6) or when member is no longer on active duty.

AHPR are maintained for 10 years, computed from the date of the original selection process. Manual computation work sheets are maintained for one year and then select/nonselect data are listed on a roster which is maintained for an additional nine years. After the specified retention period, the records are destroyed by tearing into pieces, shredding, pulping, macerating, or burning. Computer records are destroyed by erasing, deleting or overwriting.

SYSTEM MANAGER(S) AND ADDRESS:

PRODART: Chief, Board Support Branch, Secretariat, Headquarters Air Force Military Personnel Center, 550 C Street W, Randolph Air Force Base, TX 78150–4703.

AHPR: Chief, Airman Promotion Branch, Selection Board Secretariat, Headquarters Air Force Military Personnel Center, 550 C Street W, Randolph Air Force Base, TX 78150–4703.

NOTIFICATION PROCEDURE:

Individuals seeking to determine whether this system of records contains information on themselves should address written inquiries to the Chief, Board Support Branch, Selection Board Secretariat, Headquarters Air Force Military Personnel Center, 550 C Street W, Randolph Air Force Base, TX 78150–4703 for PRODART records, or to the Chief, Board Support Branch, Selection Board Secretariat, Headquarters Air Force Military Personnel Center, 550 C Street W, Randolph Air Force Base, TX 78150–4703 for AHPR records.

RECORD ACCESS PROCEDURES:

Individuals seeking to access records about themselves contained in this system should address written requests to the Chief, Board Support Branch, Selection Board Secretariat, Headquarters Air Force Military Personnel Center, 550 C Street W, Randolph Air Force Base, TX 78150–4703 for PRODART records, or to the Chief, Board Support Branch, Selection Board Secretariat, Headquarters Air Force Military Personnel Center, 550 C Street W, Randolph Air Force Base, TX 78150–4703 for AHPR records.

CONTESTING RECORD PROCEDURES:

The Air Force rules for accessing records, and for contesting contents and appealing initial agency determinations are published in Air Force Instruction 37–132; 32 CFR part 806b; or may be obtained from the system manager.

RECORD SOURCE CATEGORIES:

PRODART data is extracted from the master personnel files.

AHPR data is extracted from the active interim eligible file (promotion file) which is a subsystem of the Personnel Data System.

EXEMPTIONS CLAIMED FOR THE SYSTEM:

None.

[FR Doc. 94–11875 Filed 05–16–94; 8:45 am]

BILLING CODE 5000–04–F

Privacy Act of 1974; Notice to Alter and Add a System of Records

AGENCY: Department of the Air Force, DoD.

ACTION: Notice to alter and add a system of records.

SUMMARY: The Department of the Air Force proposes to alter one system of records and add another to its inventory of systems of records notices subject to the Privacy Act of 1974 (5 U.S.C. 552a), as amended.

DATES: These actions will be effective without further notice on June 16, 1994, unless comments are received that would result in a contrary determination.

ADDRESSES: Send comments to the Assistant Air Force Access Programs Officer, SAF/AAIA, 1610 Air Force Pentagon, Washington, DC 20330–1610.

FOR FURTHER INFORMATION CONTACT: Mr. Jim Gibson at (703) 697–3491.

SUPPLEMENTARY INFORMATION: The complete inventory of Department of Air Force record system notices subject to the Privacy Act of 1974 (5 U.S.C. 552a), as amended, have been published in the **Federal Register** and are available from the address above.

The proposed systems reports, as required by 5 U.S.C. 552a(r) of the Privacy Act were submitted on May 3, 1994, to the Committee on Government Operations of the House of Representatives, the Committee on Governmental Affairs of the Senate, and the Office of Management and Budget (OMB) pursuant to paragraph 4c of Appendix I to OMB Circular No. A–130, 'Federal Agency Responsibilities for Maintaining Records About Individuals,' dated June 25, 1993 (58 FR 36075, July 2, 1993).

Dated: May 6, 1994.

L.M. Bynum,

Alternate OSD Federal Register Liaison Officer, Department of Defense.

F035 AF MP S

SYSTEM NAME:

Physical Fitness File.

SYSTEM LOCATION:

Air Force unit of assignment and servicing medical facility.Official mailing addresses are published as an appendix to the Air Force's compilation of system notices.

CATEGORIES OF INDIVIDUALS COVERED BY THE SYSTEM:

Air Force active duty military personnel and Air Force Reserve component personnel.

CATEGORIES OF RECORDS IN THE SYSTEM:

File contains individual's cycle ergometry evaluation scores, letters entering individual into fitness rehabilitation programs, documenting fitness condition participation, fitness progress reports, scheduling medical evaluations, scheduling fitness center appointments and counseling sessions, administrative actions taken, and other pertinent documentation. All correspondence may contain personal data such as name, Social Security Number, date of birth and medical information.

AUTHORITY FOR MAINTENANCE OF THE SYSTEM:

10 U.S.C. 8013, Secretary of the Air Force; Powers and duties, delegation by; as implemented by Air Force Instruction 40–501; and E.O. 9397.

PURPOSE(S):

To document individuals' progress in the Air Force Fitness Program. The file keeps individuals informed of their fitness levels and of progress in improving fitness levels and achieving minimum Air Force fitness standards.

ROUTINE USES OF RECORDS MAINTAINED IN THE SYSTEM, INCLUDING CATEGORIES OF USERS AND THE PURPOSES OF SUCH USES:

In addition to those disclosures generally permitted under 5 U.S.C. 552a(b) of the Privacy Act, these records or information contained therein may specifically be disclosed outside the DoD as a routine use pursuant to 5 U.S.C. 552a(b)(3) as follows:

The 'Blanket Routine Uses' published at the beginning of the Air Force's compilation of systems of records notices apply to this system.

POLICIES AND PRACTICES FOR STORING, RETRIEVING, ACCESSING, RETAINING, AND DISPOSING OF RECORDS IN THE SYSTEM:

STORAGE:

Maintained in file folders and on computer and computer output products.

RETRIEVABILITY:

Retrieved by name, Social Security Number and grade.

SAFEGUARDS:

Records are accessed by custodian of the records system and by person(s) responsible for servicing the records system in performance of their official duties who are properly screened and cleared for need-to-know. Records are controlled by personnel screening. Those in computer storage devices are protected by computer system software.

RETENTION AND DISPOSAL:

Files are destroyed two years after the date an individual achieves Air Force fitness standards, or upon retirement or separation. Records are destroyed by tearing into pieces, shredding, pulping, macerating or burning. Computer records are destroyed by erasing, deleting or overwriting.

SYSTEM MANAGER(S) AND ADDRESS:

Director, Air Force Medical Operations Agency, 170 Luke Street, Suite 400, Bolling Air Force Base, DC 20332–5113.

NOTIFICATION PROCEDURE:

Individuals seeking to determine whether this system of records contains information on them should address inquiries to the Director, Air Force Medical Operations Agency, 170 Luke Street, Suite 400, Bolling Air Force Base, DC 20332–5113, or Commander at the unit of assignment or attachment. Official mailing addresses are published as an appendix to the Air Force's compilation systems of records notices.

Individual should provide full name, grade, Social Security Number, and unit and base of assignment. Personal visits require proof of identity with an Armed Forces Identification Card.

RECORD ACCESS PROCEDURES:

Individuals seeking access to records about themselves contained in this system should address requests to the Director, Air Force Medical Operations Agency, 170 Luke Street, Suite 400, Bolling Air Force Base, DC 20332–5113, or Commander at the unit of assignment or attachment. Official mailing addresses are published as an appendix to the Air Force's compilation systems of records notices.

Individual should provide full name, grade, Social Security Number. Personal visits require proof of identity with an Armed Forces Identification Card.

CONTESTING RECORD PROCEDURES:

The Air Force rules for accessing records, and for contesting and appealing initial agency determinations are published in Air Force Instruction 37–132; 32 CFR part 806b; or may be obtained from the system manager.

RECORD SOURCE CATEGORIES:

Individual to whom the record pertains.

EXEMPTIONS CLAIMED FOR THE SYSTEM:

None.

F030 AF MP A

SYSTEM NAME:

Personnel Data System (PDS) *(February 22, 1993, 58 FR 10301).*

CHANGES:

* * * * *

SYSTEM LOCATION:

Delete entry and replace with 'Headquarters United States Air Force, 1040 Air Force Pentagon, Washington, DC 20330–1040;

Headquarters Air Force Military Personnel Center, 550 C Street W, Randolph Air Force Base, TX 78150–4703; and

Headquarters Air Reserve Personnel Center, 6760 E. Irvington Place (6600), Denver, CO 80280–6600.

Headquarters of major commands and field operating agencies; consolidated base personnel offices; central civilian personnel offices; consolidated reserve personnel offices, and activity or squadron orderly rooms. Official mailing addresses are published as an appendix to the Air Force's compilation of record systems notices.'

* * * * *

PURPOSES:

Add to end of entry '*Uses external to the Air Force, with consent of the individual:* Information from the PDS supports a world-wide locator system which responds to queries as to the location of active duty or retired Air Force personnel.'

ROUTINE USES OF RECORDS MAINTAINED IN THE SYSTEM, INCLUDING CATEGORIES OF USERS AND THE PURPOSES OF SUCH USES:

Add a new third paragraph 'Locator information pertinent to active duty or retired Air Force personnel may be disclosed to recognized welfare agencies, such as the American Red Cross or the Air Force Aid Society, in emergency situations.'

* * * * *

F030 AF MP A

SYSTEM NAME:

Personnel Data System (PDS).

SYSTEM LOCATION:

Headquarters United States Air Force, 1040 Air Force Pentagon, Washington, DC 20330–1040;

Headquarters Air Force Military Personnel Center, 550 C Street W, Randolph Air Force Base, TX 78150–4703; and

Headquarters Air Reserve Personnel Center, 6760 E. Irvington Place (6600), Denver, CO 80280–6600.

Headquarters of major commands and field operating agencies; consolidated base personnel offices; central civilian personnel offices; consolidated reserve personnel offices, and activity or squadron orderly rooms. Official mailing addresses are published as an appendix to the Air Force's compilation of record systems notices.

CATEGORIES OF INDIVIDUALS COVERED BY THE SYSTEM:

Air Force active duty and retired military personnel; Air Force Reserve and Air National Guard personnel; Air Force Academy cadets; Air Force civilian employees; certain surviving dependents of deceased members of the Air Force and predecessor organizations; potential Air Force enlistees; candidates for commission enrolled in college level Air Force Reserve Officer Training Corps (AFROTC) programs; deceased members of the Air Force and predecessor organizations; separated members of the Air Force, the Air National Guard (ANG) and United States Air Force Reserve (USAFR); ANG and USAFR technicians; prospective, pending, current, and former Air Force civilian employees, except Air National Guard technicians; current and former civilian employees from other governmental agencies that are serviced at CCPOs may be included at the option of servicing CCPO; Department of Defense (DOD) contractors and foreign military personnel on liaison or support duty.

CATEGORIES OF RECORDS IN THE SYSTEM:

The principal digital record maintained at each PDS operating level is the Master Personnel File, which contains the following categories of information:

1. Accession data pertaining to an individual's entry into the Air Force (place of enlistment source of commission, home of record, date of enlistment, place from which ordered to enter active duty (EAD)).

2. Education and training data, describing the level and type of education and training, civilian or military (academic education level, major academic specialty, professional specialty courses completed, professional military education received).

3. Utilization data used in assigning and reassigning the individual, determining skill qualifications, awarding Air Force Specialty Codes (AFSC), determining duty location and job assignment, screening/selecting individual for overseas assignment, performing strength accounting processes, etc. (Primary Air Force Specialty Code, Duty and Control Air Force Specialty Code, personnel accounting symbol, duty location, up to 24 previous duty assignments, aeronautical rating, date departed last duty station, short tour return date, reserve section, current/last overseas tour).

4. Evaluation Data on members of the Air Force during their career (Officer Effectiveness Report dates and ratings, Enlisted Performance Report dates and ratings, results of various qualifications tests, and 'Unfavorable Information' indicator).

5. Promotion Data including promotion history, current grade and/or selection for promotion (current grade, date of rank and effective date; up to 10 previous grades, dates of rank and effective dates; projected temporary grade, key 'service dates').

6. Compensation data although PDS does not deal directly with paying Air Force members, military pay is largely predicated on personnel data maintained in PDS and provided to Defense Finance and Accounting System (DFAS) as described in ROUTINE USES below (pay date, Aviation Service Code, sex, grade, proficiency pay status).

7. Sustentation data—information dealing with programs provided or actions taken to improve the life, personal growth and morale of Air Force members (awards and decorations, marital status, number of dependents, religious denomination of member and spouse, race relations education).

8. Separation and retirements data, which identifies an individual's eligibility for and reason for separation (date of separation, mandatory retirement date, projected or actual separation program designator and character of discharge). At the central processing site (AFMPC), other subsidiary files or processes are operated which are integral parts of PDS:

(a) Procurement Management Information System (PROMIS) is an automated system designed to enable the United States Air Force to exercise effective management and control of the procurement personnel required to meet the total scheduled manpower requirements necessary to accomplish the Air Force mission. The system provides the recruiter with job requirement data such as necessary test scores, AFSC, sex, date of enlistment; and the recruiter enters personal data on the applicant—Social Security Number, name, date of birth, etc.—to reserve the job for him or her.

(b) Career Airman Reenlistment Reservation System (CAREERS) is a selective reenlistment process that manages and controls the numbers by skill of first-term airmen that can enter the career force to meet established objectives for accomplishing the Air Force mission. A centralized data bank contains the actual number, by quarter, for each AFSC that can be allowed to reenlist during that period. The individual requests reenlistment by stating his eligibility (AFSC, grade, active military service time, etc.). If a vacancy exists, a reservation—by name, Social Security Number, etc.—will be made and issued to the CBPO processing the reenlistment.

(c) Airman Accessions provides the process to capture a new enlistee's initial personal data (entire personnel record) to establish a personnel data record and gain it to the Master Personnel File of the Air Force. The initial record data is captured through the established interface with the Processing and Classification of Enlistees System (PACE) at Basic Military Training, Lackland Air Force Base, for non-prior service; for prior service enlistees the basic data (name, Social Security Number, date of enlistment, grade, etc.) is input directly by United States Air Force Recruiting Service and updated and completed by the initial gaining CBPO.

(d) Officer Accessions is the process whereby each of the various Air Force sources of commissioning (AF Academy, AFROTC, Officer Training School, etc.) project their graduates in advance allowing management to select by skill, academic specialty, etc.—which and how many will be called to active duty when, by entering into the record an initial assignment and projected entry onto active duty date. On that date the individual's record is accessed to the active Master Personnel File of the Air Force.

(e) Technical Training Management Information System (TRAMIS) is a system dealing with the technical training activities controlled by Air Training Command. The purpose of the system is to integrate the training program, quota control and student accounting into the personnel data system. TRAMIS consists of numerous files which constitute 'quota banks' of available training spaces, in specific courses, projected for future use based on estimated training requirements. Files include such data as: Course identification numbers, class start and graduation dates, length of training, weapon system identification, training priority designator, responsible training centers, trainee names, Social Security Number (and other pertinent personnel data) on individuals scheduled to attend classes.

(f) Training Pipeline Management Information System (TRAPMIS) is an automated quota allocating system which deals with specialized combat aircrew training and aircrew survival training. Its files constitute a 'quota bank' against which training requirements are matched and satisfied, and through which trainees are scheduled in 'pipeline' fashion to accommodate the individual's scheduled geographical movement from school to school to end assignment. Files contain data concerning the courses monitored as well as names, Social Security Numbers and other pertinent personnel data on members being trained.

(g) Air Force Institute of Technology (AFIT) Quota Bank File reflects program quotas by academic specialty for each fiscal year (current plus two future fiscal years, plus the past fiscal year programs for historical purposes). Also, this file reflects the total number of quotas for each academic specialty. Officer assignment transactions process against the AFIT Quota Bank File to reflect the fill of AFIT Quotas. Examples of data maintained are: Academic specialty, program level, fiscal year, name of incumbent selected, projected, filling AFIT quota.

(h) Job File is derived from the Authorization Record and is accessible by Position Number. Resource managers can use the Job File to validate authorizations by Position Number for assignment actions and also to make job

offers to individual officers. Internal suspensing within the Job File occurs based upon Resource Managers update transactions. Data in the file includes: Position number, duty AFSC, functional account code, program element, location, and name of incumbent.

(i) Casualty subsystem is composed of transactions which may be input at Headquarters Air Force and/or CBPOs to report death or serious illness of members from all components. A special file is maintained in the system to record information on individuals who have died. Basic identification data and unique data such as country of occurrence, date of incident, casualty group, aircraft involved in the incident and military status are recorded and maintained in this file.

(j) Awards/Decorations are recorded and maintained on all component personnel in the headquarters Air Force master files. All approved decorations are input at CBPOs whereas disapproved decorations are input at Major Command/Headquarters Air Force (MAJCOM/HAF). A decorations statistical file is built at AFMPC which reflects an aggregation of approvals/disapprovals by category of decoration. This file does not contain any individually identifiable data. All individually identifiable data on decorations is maintained in the Master Personnel File. Such information as the type of decoration, awarding authority, special order number and date of award are identified in an individual's record. Several occurrences for all decorations are stored; however only specific data on the last decoration of a particular type is maintained.

(k) Point Credit Accounting and Reporting System (PCARS). This system is an Air National Guard/Air Force Reserve unique supported by PDS. Its basic purpose is to maintain and account for retirement/retention points accrued as a result of participating in drills/training. The system stores basic personal identification data which is associated with a calendar of points, earned by participation in the Reserve program. Each year an individual's record is closed and point totals are accumulated in history, and a point earning statement is provided the individual and various records custodians.

(l) Human Reliability/Personnel Reliability File: This file is maintained at Headquarters Air Force in support of Air Force Regulation 35–99. It is not part of the Master Personnel Files but a free standing file which is updated by transactions from CBPOs. The file was established to specifically identify individuals who have become permanently disqualified under the provisions of the above regulation. A record is maintained on each disqualified individual which includes basic identification data, service component, Personnel/Human Reliability status and date, and reason for disqualification.

(m) Variable Incentive Pay (VIP) File for medical officers: Contains about 125 character record on all Air Force physicians and is specifically used to identify whether the individual is participating in the Continuation Pay or Variable Incentive Pay programs. Update to this file is provided by the Surgeon (AFMPC), changes to the Master Personnel File. Besides basic identification data an individual's record, includes source of appointment, graduate medical location status, amount of VIP or Continuation Pay and the dates of authorization and the dates and reason for separation.

(n) Weighted Airman Promotion System (WAPS):

(1) The Test Scoring and Reporting Subsystem (TSRS) provides for: Identifying at the CBPO individuals eligible for testing; providing output to the Base Test Control Officer and the CBPO to control, monitor, and operate WAPS testing functions; editing and scoring WAPS test answer cards at AFMPC; providing output for maintaining historical and analytical files at AFMPC and the Human Resources Laboratory (HRL) and includes the central identification of AFMPC of individuals eligible for testing.

(2) The Personnel Data Reporting Subsystem (PDRS) provides for: Identifying promotion eligibles at AFMPC; verifying these eligibles and selected promotion data; merging test and weighted promotion data at AFMPC to effect promotion scoring, assigning the promotion objective and aligning selectees in promotion priority sequence; maintaining projects on promotion selectees at AFMPC, MAJCOM, and the CBPO; updating these projections monthly; creating output products to monitor the flow of data in the system; maintaining promotion historical and analytical files and reports at AFMPC.

(3) Basically, identification data along with time in grade, test scores, decoration information, time in service, and airman performance report history is used to support this program.

(o) Retired Personnel Data System (RPDS) is made up of four files - Retired Officer Management File and Retired Airman Management File containing records on members in retired status and the Retired Officer and Airman Loss Files containing records on former retirees who have been lost from rolls, usually through death. The RPDS is used to produce address listings for the Retired Newsletter and Policy letter, statistical reports for budgeting, to manage the Advancement Program, the Temporary Disability Retired List, Age 59 rosters, mobilization rosters and orders for ARPC, General Officer roster, and statistical digest data for management analysis functions. Data is extracted from the master files upon retirement from Active Duty or Reserve or obtained from member by ARPC via survey or from address changes submitted to the Defense Finance and Accounting System (DFAS). Data includes name, Social Security Number, grade data, service data, education data, retirement data, address, home and business phone numbers, state of medical license, expiration date of medical license.

(p) Separated Officer File contains historical information on officers who leave the Air Force via separation, retirement, or death. Copies are sent to HRL and Washington offices for research purposes. The data comprises the Master Personnel File in its entirety and is captured 30 to 60 days after separation from the Air Force.

(q) Airman Gain/Loss File includes data extracted from the Airman Master File when accession and separation (gains and losses) occur. This file, like the Separated Officer File, is used for historical reports regarding strength changes. Data includes name, Social Security Number, and other data that reflects strength, i.e., promotions, reassignment data, specialty codes, etc.

(r) Officer and Airman Separation Subsystem is used to process, track, approve, disapprove and project separations from the Air Force and transfers between components of the Air Force. This subsystem uses the Active, Guard, and Reserve Master Personnel Files. Data includes that specifically related to separations, e.g., date of separation, separation program designator, waivers, etc.

(s) The Retirements Subsystem is used to process and track applications for an approval/disapproval and projections of retirements. This subsystem uses the Master Files for active duty and Reserve officers and airmen. Data specifically related to retirements includes application data, date of separation, waiver codes, disapproval reason codes, separation program designator, Title 10 U.S.C. section, etc.

(t) Retired Orders Log is a computer produced retirement orders routine. Orders are automatically produced when approval, verification of service

dates, and physical clearance have been entered in system. The orders log contains data found in administrative orders for retirement, including name, Social Security Number, grade, order number, effective dates, etc. The log is used to control assignment of order number, and as a cross-reference between orders, revocations and amendments.

(u) General Officer Subsystem of PDS contains data extracted from the Master Personnel File and language qualification data and assignment history data maintained by the Assistant for General Officer Matters. A record is maintained on each general officer and general officer selectee. The general officer files are updated monthly and are used to produce products used in the selection/identification of general officers for applicable assignments.

(v) Officer Structure Simulation Model (OSSM) provides officer force descriptions in various formats for existing, predictive or manipulated structures. It functions as a planning tool against which policy options can be applied so as to determine the impact of such policy decisions. The OSSM input records contain individual identifiable data from the Master Personnel Record, but all output is statistical.

(w) Widow's File is maintained on magnetic tape and updated by the office of primary responsibility. When required, address labels and listings are produced by employing selected PDS utility programs. The address labels are used to forward the Retired Newsletter to widows of active duty and retired personnel. The listings are used for management control of the program. Contained in the file are the name, address, and Social Security Number of the widow. Additionally, the deceased sponsor's name, Social Security Number, date of death, and status at time of death are maintained.

(x) Historical Files are files with a retention period of 365 days or more. They consist of copies of active master files, and are used primarily for aggregation and analysis of statistical data, although individual records may be accessed to meet ad hoc requirements.

(y) Miscellaneous files, records, and processes are a number of work files, inactive files with a less-than–365–day retention period, intermediate records, and processes relating to statistical compilations, computer operation, quality control and problem diagnosis. Although they may contain individual-identifying data, they do so only as a function of system operation, and are not used in making decisions about people.

(z) Civilian employment information including authorization for position, personnel data, suspense information; position control information; projected information and historical information; civilian education and training data; performance appraisal, ratings, evaluations of potential; civilian historical files covering job experience, training and transactions; civilian awards information, merit promotion plan work files; career programs files for such functional areas as procurement, logistics, civilian personnel, etc., civilian separation and retirement data for reports and to determine eligibility; adverse and disciplinary data for statistical analysis and employee assistance; stand-along files, as for complaints, enrollee programs; extract files from which to produce statistical reports in hard copy, or for immediate access display on remote computer terminals; miscellaneous files, as described in item (y) above.

(aa) Aviator Continuation Pay: This file is used to identify where the officer is participating in the Continuation Pay Program. Update to this file is provided by Headquarters AFMPC/DPMAT, DFAS,and directly from changes to the Master Personnel File. Identification data on an individual record includes amount of continuation pay, active duty service computation, and bonus eligibility date.

AUTHORITY FOR MAINTAINING THE SYSTEM:

10 U.S.C. 265, policies and regulations: Participation of reserve officers in preparation and administration; 269, Ready reserve: Placement in; transfer from; 275, Personnel records; 278, Dissemination of information; 279, Training Reports; 31, Enlistments; 564, Warrant officers: Effect of second failure of promotion; 593, Commissioned Officers: Appointment, how made; term; 651, Members: Required service; 671, Members not to be assigned outside US before completing training; 673, Ready reserve; (47, Uniform Code of Military Justice, Section 835, Article 35, Service of Charges; Section 837, Article 37, Unlawfully influencing action of court; Section 885, Article 85, Desertion; Section 886, Article 86, Absence without leave; Section 887, Article 87, Missing movement); 972, Enlisted members: Required to make up time lost; 1005, Commissioned officers:Retention until completion of required service; 1163, Reserve components: Members; limitations on separation; 1164, Warrant officers; separation for age; 1166, Regular warrant officers: Elimination for unfitness or unsatisfactory performance; 61, Retirement or Separation for Physical disability; 63, Retirement for Age; 1263—Age 62: Warrant officers; 65, Retirement for Length of Service; 1293, Twenty years or more: Warrant officers; 1305, Thirty years or more: Regular warrant officers; 67, Retired pay; 1331, Computation of years of service in determining entitlement to retired pay; 1332, Age and service requirements; 1333, Computation of years of service in computing retired pay; 79, Correction of Military Records; 165, Accountability and responsibility, 2771, Final settlement of accounts: Deceased members; 8013, Secretary of the Air Force: Powers and duties; delegation by; 805, The Air Staff, Sections 8032, General duties; and 8033, Reserve components of Air Force; policies and regulations for government of: Functions of National Guard Bureau with respect to Air National Guard; 831, Strength, Section 8224, Air National Guard of the United Status; 833, Enlistments; 835, Appointments in the Regular Air Force, 8284, Commissioned officers; Appointment, how made; 8285, Commissioned officers: Original appointment; qualifications; 8296, Promotion lists: Promotion-list officer defined; determination of place upon transfer or promotion; 8297, Selection boards; 8303, commissioned officers; Effect of failure of promotion to captain, major, or lieutenant colonel; 837, Appointments as Reserve Officers; 8360, Commissioned officers: Promotion service; 8362, Commissioned officers: Selection boards; 8363, Commissioned officers; Selection boards; general procedures; 8366, Commissioned officers; Promotion to captain, major, or lieutenant colonel; 8376, Commissioned officers: Promotion when serving in temporary grade higher than reserve grade; 839, Temporary Appointments, 8442, Commissioned officers; regular and reserve components: Appointment in higher grade; 8447, Appointments in commissioned grade: How made; how terminated; 841, Active Duty, 8496, Air National Guard of United States: Commissioned officers; duty in National Guard Bureau; 853, Rights and benefits, Section 8691, Flying officer rating: Qualification; 857, Decorations and Awards; 859, Separation, 8786, Officer considered for removal: Voluntary retirement or honorable discharge; severance benefits; 8796, Officers considered for removal: Retirement or discharge; Separation or Transfer to Retired Reserve, 8846, Deferred Officers; 8848, 28 years: Reserve first lieutenants, captains, majors, and lieutenant colonels; 8851, Thirty years or five years in grade: Reserve colonels and brigadier

generals; 8852, Thirty-five years or five years in grade: Reserve major generals; 8853, Computation of years of service; 865, Retirement for Age; 8883, Age 60: regular commissioned officers below major general; 8884, Age 60: Regular major generals whose retirement has been deferred; 8885, Age 62: Regular major generals; 8886, Regular major generals whose retirement has been deferred; 867, Retirement for Length of Service; 8911, Twenty years or more; regular or reserve commissioned officers; 8913, Twenty years or more: Deferred officers not recommended for promotion; 8914, Twenty to thirty years: Regular enlisted members; 8915, Twenty-five years: Female majors except those designated under section 8067(a)-(d) or (g)-(i) of this title; 8918, Thirty years or more: Regular commissioned officers; 8921, Thirty years or five years in grade: Promotion-list colonels; 8922, Thirty years or five years in grade: Regular brigadier generals; 8923, Thirty-five years or five years in grade: Regular major generals; 8924, Forty years or more: Air Force officers; 901, Training generally; 9301, Members of Air Force: Detail as students, observers and investigators at education institutions, industrial plants, and hospitals; and 9302, Enlisted members of Air Force: Schools; 903, United States Air Force Academy; 9342, Cadet: Appointment; numbers, territorial distribution; 9344, Selection of persons from Canada and American Republics; 9345, Selection of Filipinos; 1, Organization, 102, General policy; and 104, units; Location; organization; command; 3, Personnel, 307, Federal recognition of officers; Examination, certification of eligibility; 7, Services, supplies, etc., 709, Caretakers and clerks; 3, Basic Pay, 308, Special pay: Reenlistment bonus; 313, Special pay: Medical officers who execute active duty agreements; 7, Allowances, 407, Travel and transportation allowances: Dislocation allowance; 10; Air Force Manual 30–3, Vol I-V, Mechanized Personnel Procedures, Air Force Manual 30–130, Base Level Military Personnel System, and Air Force Manual 300–4, Standard Data Elements and Codes; and E.O. 9397.

PURPOSE(S):

The Air Force operates a centralized personnel management system in an environment that is widely dispersed geographically and encompasses a population that is diverse in terms of qualifications, experience, military status and needs.

There are three major centers of Air Force personnel management: Headquarters United States Air Force, Washington, DC, where most major policy and long-range planning/programming decisions are made; the Air Force Military Personnel Center at Randolph Air Force Base, TX, which performs most personnel operations-type functions for the active duty components of the force; and the Air Reserve Personnel Center at Denver, CO, which performs certain operational functions for the Reserve components of the force. Offices at major command headquarters, State Adjutant Generals, and Air Force bases perform operational tasks pertaining to the population for which they are responsible. The structure of the Air Force and its personnel management system, the composition of the force, and the Air Force's stated objective of treating people as individuals, i.e., giving due consideration to their desires, needs and goals, demand a dynamic data system that is capable of supporting the varying needs of the personnel managers at each echelon and operating locations. It is to this purpose that the data in the Personnel Data System is collected, maintained, and used.

Uses within the Air Force Personnel Community:

1. Headquarters United States Air Force, Washington, DC: Deputy Chief of Staff, Personnel and his immediate staff; Director of Personnel Plans; Director of Personnel Programs; Assistant for General officer Matters; Assistant for Colonel Assignments; Reserve Personnel Division; Air National Guard Personnel Division; and The Surgeon General, the Chief of Air Force Chaplains and the Staff Judge Advocate, each of which perform certain personnel functions within their area of responsibility. Data from the central data base at the AFMPC is furnished Washington area agencies by retrieval from the computer at Randolph via remote access devices and by provision of recurring products containing required management information, including computer tape files which are used as input to unique systems with which PDS interfaces. Although most of the data is used by policy makers to develop long-term plans and programs and track progress toward established goals, some individual data is provided/retrieved to support actions taken on certain categories of persons managed by offices in the headquarters, e.g. General Officers, Colonels, Air National Guard personnel, etc.

2. Air Force Military Personnel Center (AFMPC), Randolph Air Force Base, TX: Personnel managers at AFMPC use the data in PDS to make decisions on individual actions to be taken in areas such as personnel procurement, education and training, classification, assignment, career development, evaluation, promotion, compensation, casualty and personal affairs, separation and retirement.

3. Air Reserve Personnel Center (ARPC), Denver, CO: Personnel managers at ARPC perform many of the same functions for the Reserve components of the Air Force as the managers at AFMPC perform for the active duty force. As with the Washington area, ARPC obtains data from the central data base at AFMPC by retrieval through remote terminals and recurring output products containing information necessary to their management processes.

4. Major Command Headquarters: Major command headquarters personnel operation are supported by the standard content of PDS records provided them by AFMPC. In addition, there is provided in the PDS record an 'add-on area' which the commands are authorized to use for the storage of data which will assist them in fulfilling unique personnel management requirements generated by their mission, structure, geographical location, etc. The standard functions performed fall generally under the same classifications as those in AFMPC, e.g., assignment, classification, separation, etc. Nonstandard usages include provisions of unique aircrew data, production of specially-tailored name listing, control of theater oriented training, etc. Some commands use PDS data—both standard and add-on as input to unique command systems, which are separately described in the **Federal Register**.

5. Consolidated Base Personnel Offices (CBPO): CBPOs, which represent the base-level aspect of PDS, are the prime point of system-to-people interface. Supplied with a standard data base and system, CBPOs provide personnel management support to commanders and supervisors on a daily basis. Acting on receipt of data from higher headquarters, primarily by means of transactions processed through PDS, they notify people of selection for reassignment, promotion, approval/disapproval of requests for separation and retirement, and similar personnel actions. When certain events occur to an individual at the local level, e.g., volunteer for overseas duty, reduction in grade, change in marital status, application for retirement, etc., the CBPO enters transactions into the vertical system to transmit the requisite information to other management levels and update the automated records resident at those levels. CBPOs too are

allotted an 'add-on' area in the computer record which they use to support local management unique requirements such as local training scheduling, unique locator listing urinalysis testing scheduling, etc.

Uses within the Air Force—external to the Personnel Community.

1. Headquarters USAF/AFMPC Interfaces: Automated interfaces exist between the PDS central site files and the following systems of other functions:

a. The Flight Records Data System (FRDS) maintained by the Air Force Safety Agency (AFSA) at Norton Air Force Base, CA.

b. Certain personnel identification data on rated officers is transferred monthly to the FRDS. This data flow creates the basic identifying data in the FRDS, insures compatibility with the PDS, and precludes duplicative data collection and input generation by the AFSA.

c. Update of the personnel data to the FRDS generates return flow of flying hour data which is used at AFMPC for rated resource distribution management.

d. The Master Military Pay Account (MMPA), is the Joint Uniform Military Pay System (JUMPS) centralized pay file maintained by DFAS at Denver, CO. The PDS transfers certain pay related data as changes occur to update the MMPA, e.g., promotions, accessions, separations/retirements, name, Social Security Number, grade. These data provide criteria for DFAS to determine specific pay entitlement.

e. DFAS maintains a separate pay system for Air National Guard and Air Force Reserve personnel called the Air Reserve Pay and Allowances System (ARPAS).

(1) PDS outputs certain pay related data to ARPAS as changes occur, e.g., retirements/separations, promotions, name, Social Security Number, grade. These data form the criteria for DFAS to determine specific Reserve pay entitlement.

(2) ARPAS outputs data which affect accumulated point credits for Air National Guard/Reserve participation to AFMPC for update of the PCARS, a component of PDS. PCARS also receives monthly input from Headquarters Air University which updates point credits as a result of completing an Extension Courses Institute correspondence program.

f. DFAS provides data on (VIP) for Medical Officers which is used to update a special control file within PDS and produce necessary reports for management of the VIP program.

g. Air Training Command operates a system called PACE (Processing and Classification of Enlistees) at Lackland Air Force Base, TX. From that system data is fed to AFMPC to initially establish the PDS record on an Air Force enlistee.

h. On a monthly basis, copies of the PDS Master Personnel File are provided to the Human Resources Laboratory at Brooks Air Force Base, TX, where they are used as a statistical data base for research purposes.

i. On a quarterly basis, AFMPC provides the United States Air Force School of Aerospace Medicine with data concerning name, Social Security Number, and changes in base and command of assignment of flying personnel. The data reflects significant medical problems in the flying population.

j. A complete printout of PDS data pertaining to an individual is included in his Master Personnel File when it is forwarded to National Personnel Records Center.

k. PDS data is provided to the Contingency Planning Support Capability (CPSC) at five major command headquarters: Tactical Air Command, Military Airlift Command, Air Force Communications Command, United States Air Forces Europe, and Pacific Air Forces. A record identifiable by individual's name and Social Security Number provides contingency and/or manning assistance temporary duty (TDY) being performed by the individual. Record is destroyed upon completion of the TDY. Statistical records (gross statistics by skill and unit) are also generated for CPSC from PDS providing force availability estimates. CPSC is described separately in the **Federal Register.**

2. Consolidated Base Personnel Offices (CBPO) Interfaces: Certain interfaces have been established at base level to pass data from one functional system to another. The particular mode of interface depends on the needs of the receiving function and the capabilities of the system to produce the necessary data:

a. The Flight Management Data System (FMDS) receives an automated flow of selected personal data on flying personnel as changes occur. This data consists primarily of assignment data and service dates which the base flight manager uses to determine appropriate category of aviation duty which is reflected by designation of an Aviation Service Code. The FMDS outputs aviation service data as changes occur to the BLMPS. These data subsequently flow to the PDS central site files at AFMPC so it is available for resource management decisions.

b. The Medial Administration Management System (MAMS), currently being developed and tested, will receive flow of selected assignment data as changes occur for personnel assigned to medical activities. MAMS will use these data to align assigned personnel with various cost accounting work centers within the medical activity and thus be able to track manpower expenditure by subactivities.

c. The Automated Vehicle Operator Record (AVOR) is being developed to support motor vehicle operator management. Approximately 115 characters of vehicle operator data will be incorporated into the BLMPS data base during FY76 for both military and civilian personnel authorized to operate government motor vehicles and selected personnel data items (basic identification data) will be authorized for access by the vehicle operator managers.

d. Monthly, a magnetic tape is extracted from BLMPS containing selected assignment data on all assigned personnel. This tape is transferred to the base Accounting and Finance Office for input into the Accounting Operations System. This system uses these data to derive aggregate base manpower cost data.

e. A procedure is designed into BLMPS to output selected background data in predefined printed format for personnel being administered military justice. This output is initiated upon notification by the base legal office. The data is forwarded to the major command where it is input into the Automated Military Justice Analysis and Management System (AMJAMS).

f. The BLMPS output (on an event-oriented basis) pay-affecting transactions such as certain promotions, accessions, and assignments/reassignments, to DFAS, where the data is entered into the JUMPS.

Uses external to the Air Force, but within DOD.

1. To The Office Of The Secretary Of Defense (OSD): Individual information is provided to offices in OSD on a recurring basis to support top-level management requirements within the Department of Defense. Examples are the DOD Recruiter File to the Assistant Secretary for Manpower and Reserve Affairs (M&RA), a magnetic tape extract of military personnel records (RCS: DDM(SA)1221) to M&RA, input to the Reserve Component Common Personnel Data System to M&RA, and the Post Career Data File to M&RA.

2. To other Defense Agencies: PDS supports other components of DOD by provision of individual data in support

of programs operated by those agencies. Examples are the Selected Officer List to Defense Intelligence Agency for use in monitoring a classified training program and the Defense System Management School (DSMS) Track Record System to DSMS for use in evaluating the performance of graduates of that institution. An extract file on Air National Guard Technicians is provided the National Guard Computer Center.

Uses external to the Air Force:

Information from the PDS supports a world-wide locator system which responds to queries as to the location of active duty or retired Air Force personnel.

Uses external to the Air Force, with consent of the individual: Information from the PDS supports a world-wide locator system which responds to queries as to the location of active duty or retired Air Force personnel.

ROUTINE USES OF RECORDS MAINTAINED IN THE SYSTEM, INCLUDING CATEGORIES OF USERS AND THE PURPOSE OF SUCH USES:

In addition to those disclosures generally permitted under 5 U.S.C. 552a(b) of the Privacy Act, these records or information contained therein may specifically be disclosed outside the DOD as a routine use pursuant to 5 U.S.C. 552a(b)(3) as follows:

Other Government/Quasi-Government Agencies: Information used in analyzing officer/airman retention is provided RAND Corporation. Data on prior service personnel with military service obligations is forwarded to the National Security Agency. Lists of officers selected for promotion and/or appointment in the Regular Air Force are sent to the Office of the President and/or the Congress of the United States for review and confirmation. Certain other personnel information is provided these and other government agencies upon request when such data is required in the performance of official duties. Selected personnel data is provided foreign governments, United States governmental agencies, and other Uniformed Services on United States Air Force personnel assigned or attached to them for duty. Examples: the government of Canada, Federal Aviation Administration, U.S. Army, Navy, etc.

Litigation/Miscellaneous: Lists of individuals selected for promotion or appointment, who are being reassigned, who die, or who are retiring are provided to unofficial publications such as the Air Force Times, along with other information of interest to the general Air Force public. Information from PDS support a world-wide locator system which responds to queries as to the location of individuals in the Air Force. Locator information pertinent to personnel on active duty may be furnished to a recognized welfare agency such as the American Red Cross or the Air Force Aid Society. For civilian personnel—to provide automated system support to Air Force officials at all levels from that part of the Office of Personnel Management required personnel management and records keeping system that pertains to evaluation, authorization and position control, position management, staffing skills inventory, career management, training, retirement, employee services, rights and benefits, merit promotion, demotions, reductions in force, complaints resolution, labor management relations, and the suspensions and processing of personnel actions; to provide for transmission of such records between employing activities within the Department of Defense—to provide individual records and reports to OPM; to provide information required by OPM for the transfer between federal activities; to provide reports of military reserve status to other armed services for contingency planning—to obtain statistical data on the work force to fulfill internal and external report requirements and to provide Air Force offices with information needed to plan for and evaluate manpower, budget and civilian personnel programs—to provide minority group designator codes to the Office of Personnel Management's automated data file—to provide the Office of the Assistant Secretary of Defense, Manpower and Reserve Affairs, with data to access the effectiveness of the program for employment of women in executive level positions—to obtain listings of employees by function or area for locator and inventory purposes by Air Force offices—to assess the effect or probable impact of personnel program changes by simulations and modeling exercises—to obtain employee duty locations and other information releasable under OPM rules and the Freedom of Information Act to respond to request from Air Force offices, other Federal agencies and the public—to provide individual records to other components of the Department of Defense in the conduct of their official personnel management program responsibilities—to provide records to OPM for file reconciliation and maintenance purposes—and to provide information to employee unions as required by negotiated contracts.

Locator information pertinent to active duty or retired Air Force personnel may be disclosed to recognized welfare agencies, such as the American Red Cross or the Air Force Aid Society, in emergency situations.'

The 'Blanket Routine Uses' published at the beginning of the Air Force's compilation of systems of records notices apply to this system.

POLICIES AND PRACTICES FOR STORING, RETRIEVING, ACCESSING, RETAINING, AND DISPOSING OF RECORDS IN THE SYSTEMS:

STORAGE:

Maintained in visible file binders/cabinets, card files, on computer magnetic tapes, disks or computer paper printouts or microfiche.

RETRIEVABILITY:

Retrieved by name or Social Security Number. The primary individual record identifier in PDS is Social Security Number. Some files are sequenced and retrieved by other identifiers; for instance, the assignment action record is identified by an assignment action number. Additionally, at each echelon there exists computer programs to permit extraction of data from the system by constructing an inquiry containing parameters against which to match and select records. As an example, an inquiry can be written to select all Captains who are F–15 pilots, married, stationed at Randolph Air Force Base, who possess a master's degree in Business Administration; then display name, Social Security Number, number of dependents and duty location. There is the added capability of selecting an individual's record or certain preformatted information by Social Security Number on an immediate basis using a teletype or cathode ray tube display device. High-speed line printers located in the Washington, DC area, at major command headquarters, and ARPC permit the transfer of volume products to and for the use of personnel managers at those locations.

SAFEGUARDS:

Records are accessed by custodian of the record system and by person(s) responsible for servicing the record system in the performance of their official duties where authorized, and properly screened and cleared for need-to-know, and by commanders of medical centers and hospitals. Records are stored in security file containers/cabinets, safes, vaults and locked cabinets, safes, vaults or rooms. Records are protected by guards. Records are controlled by personnel screening visitor registers and computer system software.

RETENTION AND DISPOSAL:

Retained in office files until superseded, obsolete, no longer needed

for reference, or on inactivation, then destroyed by tearing into pieces, shredding, pulping, macerating, or burning. Preceding retention statement applies to Analog output products of the PDS. Data stored digitally within system is retained only for the period required to satisfy recurring processing requirements and/or historical requirements. Files with a retention period of 364 days or less are automatically released at the end of their specified retention period. 'Permanent history' files are retained for 10 years. Files 365 or more days old are defined as 'historical files' and are not automatically released. Retention periods for categories of PDS files are as follows: If cycle in which a program or series of programs creating output is daily, and the created magnetic tape file will be used for processing of next daily, then the retention will be not greater than 10 days. If cycle in which a program or series of programs creating output is daily, and the created magnetic tape file will be used for processing of next daily, which is also used for processing of weekly runs, then the retention will be not greater than 20 days. If cycle in which a program or series of programs creating output is daily, and the created magnetic tape file will be used for processing of next weekly, which is also used for processing of monthly runs, then the retention will be not greater than 30 days. If cycle in which a program or series of programs creating output is weekly, and the created magnetic tape file will be used for processing of next weekly, then the retention will be not greater than 20 days. If cycle in which a program or series of programs creating output is weekly, and the created magnetic tape file will be used for processing of next weekly, which is also used for processing of monthly runs, then the retention will be not greater than 30 days. If cycle in which a program or series of programs creating output is monthly, and the created magnetic tape file will be used for processing of next monthly, then the retention will be not greater than 30 days. If cycle in which a program or series of programs creating output is monthly, and the created magnetic tape file will be used for processing of next monthly, which is also used for processing of quarterly runs, then the retention will be not greater than 90 days. If cycle in which a program or series of programs creating output is monthly, and the created magnetic tape file will be used for processing of next monthly, which is also used for processing of semi-annual run, the retention will be not greater than 190 days. If cycle in which a program or series of programs creating output is monthly, which is also used for processing of annual runs, then the retention will be not greater than 365 days. If cycle in which a program or series of programs creating output is monthly, and the created magnetic tape file will be used for processing of next monthly, which is also used for processing of permanent history, then the retention will be not greater than 999 days. If cycle in which a program or series of programs creating output is quarterly, and the created magnetic tape file will be used for processing of next quarterly, then the retention will be not greater than 90 days. If cycle in which program or series of programs creating output is quarterly, and the created magnetic tape file will be used for processing of next quarterly, which is also used for processing of semi-annual run, then the retention will be not greater than 190 days. If cycle in which a program or series of programs creating output is quarterly, and the created magnetic tape file will be used for processing of next quarterly, which is also used for processing of annual runs, then the retention will be not greater than 365 days. If cycle in which a program or series of programs creating output is quarterly, and the created magnetic tape file will be used for processing of next quarterly, which is also used for processing of permanent history, then the retention will be not greater than 999 days. If cycle in which a program or series of programs creating output is annual, and the created magnetic tape file will be used for processing of next annual, then the retention will be not greater than 365 days. If cycle in which a program or series of programs creating output is annual, and the created magnetic tape file will be used for processing of next annual, which is also used for processing of permanent history, then the retention will be not greater than 999 days. If the program or series of programs creating output is a one time run, and the file will be used for processing as required, then the retention will be lowest possible retention commensurate to job completion. If the program or series of programs creating output is compile card image or SOLT tapes, and the created magnetic tape file will be used for processing as required run, then the retention will be not greater than 90 days maximum. If cycle in which a program or series of programs creating output is as required runs, and the created magnetic tape file will be used for processing as required, the retention will be lowest possible commensurate to job completion. If the program or series of programs creating output is test files, and the created magnetic tape file will be used for processing as required, then the retention will be not greater than 30 days. If the program or series of programs creating output is print/punch backup and the created magnetic tape file will be used for processing as required, then the retention will be not greater than 10 days. In addition, for civilian personnel at base level (CCPO), master personnel files for prospective employees are transferred to the active file upon appointment of the employee or in the event the employee is not appointed and will no longer be considered a candidate for appointment, are destroyed by degaussing-master personnel files for active employees are transferred to the separated employee history file where they are retained for three years subsequent to separation and then destroyed by degaussing. The notification of personnel action—Standard Form 450—is disposed of as directed by OPM—work files and records such as the employee career brief, position survey work sheet, retention register work sheet, alphabetic and Social Security Number locator files, and personnel and position control register are destroyed after use by tearing into pieces, shredding, pulping, macerating, or burning—work sheets pertaining to qualification and retention registers are disposed of as directed by the Office of Personnel Management—transitory files such as pending files, and recovery files are destroyed after use by degaussing—files and records retrieved through general retrieval systems are destroyed after use by tearing into pieces, shredding, pulping, macerating, or burning. Those records at AF Manpower and Personnel Center for the end of each fiscal year quarter are retained for five years before destroying by deletion—the separated employee file retains employee information at time of separation for five years after which the employee's record is destroyed by degaussing.

SYSTEM MANAGER(S) AND ADDRESS:

Deputy Chief of Staff, Personnel, Headquarters United States Air Force, Washington, DC 20330–1000.

Subordinate system managers are:

a. Director of Personnel Data Systems, Assistant Deputy Chief of Staff for Personnel, Headquarters Air Force Military Personnel Center (HQ AFMPC), Randolph Air Force Base, TX 78150–6001. He is responsible for overall PDS design, maintenance and operation, and is designated the Automated Data

Processing system manager for all Air Force personnel data systems.

b. The Director of Personnel Data Systems at each major command headquarters for systems operated at that level.

c. The Chief, CBPO, at Air Force installations for systems operated at that level.

d. The Civilian Personnel Officer at Air Force installations for civilian systems operated at that level. Official mailing addresses are published as an appendix to the Air Force's compilation of record systems notices.

NOTIFICATION PROCEDURES:

Individuals seeking to determine whether this system of records contains information on themselves should address written inquiries to or visit the system manager of the operating level with which they are concerned.

Persons submitting such a request, either personally or in writing, must provide Social Security Number, name, and military status (active, ANG/USAFR, retired, etc.) ANG members not on extended active duty may submit such requests to the appropriate State Adjutant General or the Chief of the servicing ANG CBPO. USAFR personnel not on extended active duty may submit such requests to ARPC, Denver, CO 80280–5000, or, if unit assigned, to the Chief of the serving CBPO or Consolidated Reserve Personnel Office. Personal visits to obtain notification may be made to the Military Records Review Room, Air Force Manpower and Personnel Center, Randolph Air Force Base, TX 78150–6001; The Military Records Room, Air Reserve Personnel Center, Denver, CO 80280; The Office of the Director, National Personnel Records Center (NPRC), 111 Winnebago Street, St. Louis, MO 63118; the office of the Director of Personnel Data Systems at the appropriate major command headquarters; or the office of the Chief of his servicing CBPO. Identification will be based on presentation of DD Form 2AF, Military Identification Card. Air Force civilian employees must provide Social Security Number, full name, previous names, if any, last date and location of Air Force civilian employment, if not currently employed by the Air Force—current employees should submit such requests to the CCPO—former employees of the Air Force should submit such requests to the CCPO for the last Air Force installation at which they were employed. Authorizations for a person other than the data subject to have access to an individual's records must be based on a notarized statement signed by the data subject.

RECORD ACCESS PROCEDURES:

Individuals seeking to access records about themselves contained in this system should address written requests to the subordinate system manager at AFMPC, ARPC, NPRC, Major Command or CBPO/CRPO/CCPO. Official mailing addresses are published as an appendix to the Air Force's compilation of record systems notices.

CONTESTING RECORDS PROCEDURES:

The Air Force rules for accessing records and for contesting and appealing initial agency determinations are published in Air Force Instruction 37–132; 32 CFR part 806b; or may be obtained from the system manager.

RECORD SOURCE CATEGORIES:

Information obtained from educational institutions, medical institutions, automated system interfaces, police and investigating officers, the bureau of motor vehicles, a state or local government and source documents such as reports.

EXEMPTIONS CLAIMED FOR THE SYSTEMS:

None.

[FR Doc. 94–11878 Filed 05–16–94; 8:45 am]

BILLING CODE 5000–04–F

Department of the Army

Army Science Board; Open Meeting

In accordance with section 10(a)(2) of the Federal Advisory Committee Act (Pub. L. 92–463), announcement is made of the following Committee Meeting:

Name of Committee: Army Science Board (ASB).

Date of Meeting: 1–2 June 1994.

Time of Meeting: 0900–1600.

Place: Pentagon, Washington, DC.

Agenda

The Army Science Board's Ad Hoc Subgroup on the "Science and Engineering Requirements for Military Officers and Civilian Personnel in the High Tech Army of Today and Tommorrow" will meet on 1–2 June at the Pentagon to receive briefings from and discuss science and engineering requirements for army personal with ADCSPER, PERSCOM, AAC, AMC, and DAU. This meeting will be open to the public. Any interested person may attend, appear before, or file statements with the committee at the time and in the manner permitted by the committee. The ASB Administrative Officer, Sally Warner, may be contacted for further information at (703) 695–0781.

Herbert J. Gallagher,

COL, GS, Executive Secretary.

[FR Doc. 94–12071 Filed 5–16–94; 8:45 am]

BILLING CODE 3710–08–M

Uniformed Services University of the Health Sciences

Privacy Act of 1974; Notice to Add and Delete Systems of Records

AGENCY: Uniformed Services University of the Health Sciences, DOD.

ACTION: Notice to add and delete systems of records.

SUMMARY: The Uniformed Services University of the Health Sciences proposes to add one system and delete three systems of records from its inventory of records systems subject to the Privacy Act of 1974 (5 U.S.C. 552a), as amended.

DATES: The proposed addition and deletions will be effective without further notice on June 16, 1994, unless comments are received which result in a contrary determination.

ADDRESS: Send comments to Chief, Records Management and Privacy Act Branch, Washington Headquarters Services, 1155 Defense Pentagon, Washington, DC 20301–1155.

FOR FURTHER INFORMATION CONTACT: Mr. Dan Cragg, OSD Privacy Act Officer at (703) 695–0970 or DSN 225–0970.

SUPPLEMENTARY INFORMATION: The Uniformed Services University of the Health Sciences systems of records notices subject to the Privacy Act of 1974 (5 U.S.C. 552a), as amended, have been published in the **Federal Register** and are available from the address above.

The proposed new system report, as required by 5 U.S.C. 552a(r) of the Privacy Act was submitted on May 3, 1994, to the Committee on Government Operations of the House of Representatives, the Committee on Governmental Affairs of the Senate, and the Office of Management and Budget (OMB) pursuant to paragraph 4c of Appendix I to OMB Circular No. A–130, 'Federal Agency Responsibilities for Maintaining Records About Individuals,' dated June 25, 1993 (58 FR 36075, July 2, 1993).

Dated: May 6, 1994.

Patricia L. Toppings,

Alternate OSD Federal Register Liaison Officer, Department of Defense.

DELETIONS

WUSU08

SYSTEM NAME:

USUHS Radiation Safety Training Records *(February 22, 1993,58 FR 10927).*

Reason: Functions supported by this system are now incorporated in WUSU20, entitled USUHS Personnel Radiation Exposure Records.

WUSU010

SYSTEM NAME:

USUHS Thyroid Bioassay Records *(February 22, 1993, 58 FR10928).*

Reason: Functions supported by this system are now incorporated in WUSU20, entitled USUHS Personnel Radiation Exposure Records.

WUSU011

SYSTEM NAME:

USUHS Radiation Dosimetry Records *(February 22, 1993, 58 FR10928).*

Reason: Functions supported by this system are now incorporated in WUSU20, entitled USUHS Personnel Radiation Exposure Records.

ADDITION
WUSU20

SYSTEM NAME:

Personnel Radiation Exposure Records.

SYSTEM LOCATION:

Uniformed Services University of the Health Sciences, 4301 Jones Bridge Road, Bethesda, MD 20814–4799;

Armed Forces Radiobiology Research Institute, Bethesda, MD 20889–5603; and

Field Command, Defense Nuclear Agency, Kirtland AFB, MX 87115–5000.

CATEGORIES OF INDIVIDUALS COVERED BY THE SYSTEM:

Employees, contractors, or visitors who enter a facility or area requiring the wearing of a radiation dosimeter.

CATEGORIES OF RECORDS IN THE SYSTEM:

Name, Social Security Number, sex, date of birth, current and previous radiation exposure history, dates and places of employment, records of individual's training in radiation safety, dates of exposures, citizenship, information on pregnancy, areas visited or worked, dates of arrival and departure, organization, assigned department, bioassay information, grade/rank, work phone and location.

AUTHORITY FOR MAINTENANCE OF THE SYSTEM:

10 U.S.C. 2113, Uniformed Services University of the Health Sciences; Atomic Energy Act of 1954, 42 U.S.C. 2013, Military Construction Act of 1977 (Pub.L. 94–367), and E.O. 9397.

PURPOSE(S):

For use by university or institute officials, employees, and authorized contractors, to provide documentation of any exposure to radiation which might be experienced by an individual.

ROUTINE USES OF RECORDS MAINTAINED IN THE SYSTEM, INCLUDING CATEGORIES OF USERS AND THE PURPOSES OF SUCH USES:

In addition to those disclosures generally permitted under 5 U.S.C. 552a(b) of the Privacy Act, these records or information contained therein may specifically be disclosed outside the DoD as a routine use pursuant to 5 U.S.C. 552a(b)(3) as follows:

Records may be reviewed by the U.S. Nuclear Regulatory Commission (NRC) as part of NRC's on-going administration of the Materials License, and by the Radiation Safety Committee or the Radiation Safety Officer and his/her staff to review an individual's qualifications and/or expertise in conducting experiments using radioiodine compounds.

The 'Blanket Routine Uses' set forth at the beginning of the USUHS compilation of systems of records notices apply to this record system.

POLICIES AND PRACTICES FOR STORING, RETRIEVING, ACCESSING, RETAINING, AND DISPOSING OF RECORDS IN THE SYSTEM:

STORAGE:

Card files, paper records in file folders, microfiche/film and automated records on magnetic tapes, disks and computer products.

RETRIEVABILITY:

Records are accessed by name, Social Security Number, or department.

SAFEGUARDS:

Computer equipment and records are in controlled access areas protected by guards, intrusion alarms, and coded locks. Manual records are secured in locked cabinets or vaults. Automated records are protected by user identification codes and passwords which limit access to the system.

RETENTION AND DISPOSAL:

For students or employees, records are kept for 75 years. For visitors, records are retired after two years to a record holding area for 75 year retention.

SYSTEM MANAGER(S) AND ADDRESS:

Dosimetry Manager, Department of Environmental Health and Occupational Safety, Uniformed Services University of the Health Sciences, 4301 Jones Bridge Road, Bethesda, MD 20814–4799.

NOTIFICATION PROCEDURE:

Individuals seeking to determine whether information about themselves is contained in this system should address written inquiries to the Dosimetry Manager, Department of Environmental Health and Occupational Safety, Uniformed Services University of the Health Sciences, 4301 Jones Bridge Road, Bethesda, MD 20814–4799.

Written requests should include full name, Social Security Number, address, and signature of the requester.

RECORD ACCESS PROCEDURES:

Individuals seeking access to information about themselves contained in this system should address written inquiries to the Dosimetry Manager, Department of Environmental Health and Occupational Safety, Uniformed Services University of the Health Sciences, 4301 Jones Bridge Road, Bethesda, MD 20814–4799.

Written requests should include full name, Social Security Number, address, and signature of the requester.

CONTESTING RECORD PROCEDURES:

The USUHS' rules for accessing records and for contesting contents and appealing initial determinations are contained in OSD Administrative Instruction 81; 32 CFR part 315; or may be obtained from the system manager.

RECORD SOURCE CATEGORIES:

Information from individual's and/or their dosimetry or bioassay records, previous educational facilities or employers, and other personal medical or radiation-related records.

EXEMPTIONS CLAIMED FOR THE SYSTEM:

None.

[FR Doc. 94–11877 Filed 05–16–94; 8:45 am]
BILLING CODE 5000–04–F

DEPARTMENT OF EDUCATION

[CFDA No.: 84.261]

Dwight D. Eisenhower Leadership Program; Notice Inviting Applications for New Awards for Fiscal Year (FY) 1994

Purpose of Program: To provide grants that establish prototypes that reach out to young Americans and promote the practical study and teaching of leadership through programs specially prepared to foster the development of new generations of leaders in the areas of national and international affairs.

Eligible Applicants: Institutions of higher education (as defined in section 1201 of the Higher Education Act of 1965, as amended), or nonprofit private organizations, in combination with such institutions.

Deadline for Transmittal of Applications: July 1, 1994.

Deadline for Intergovernmental Review: August 30, 1994.

Applications Available: May 19, 1994.

Available Funds: Approximately $2,000,000.

Estimated Range of Awards: $50,000–$250,000.

Estimated Average Size of Awards: $150,000.

Estimated Number of Awards: 14.

Note: The Department is not bound by any estimates in this notice.

Project Period: Up to 24 months.

Applicable Regulations: The Education Department General Administrative Regulations (EDGAR) in 34 CFR parts 74, 75, 77, 79, 82, 85, and 86.

INVITATIONAL PRIORITY: Under 34 CFR 75.105(c)(1) the Secretary is particularly interested in applications that meet the following invitational priority. However, an application that meets this invitational priority does not receive competitive or absolute preference over other applications:

Applications that demonstrate the development of curriculum in leadership for secondary and postsecondary education.

Selection Criteria: In evaluating applications for new grants under this competition, the Secretary uses the selection criteria in 34 CFR 75.210. The program regulations in 34 CFR 75.210 provide that the Secretary may award up to 100 points for the selection criteria, including a reserved 15 points. For this competition, the Secretary distributes the 15 additional points to the selection criterion in 34 CFR 75.210(b)(3) (Plan of operation) for a possible total of 30 points.

FOR APPLICATIONS OR INFORMATION CONTACT: Dr. Donald N. Bigelow, U.S. Department of Education, 400 Maryland Avenue, SW., Washington, DC 20202–5247. Telephone: (202) 732–6061. Individuals who use a telecommunications device for the deaf (TDD) may call the Federal Information Relay Service (FIRS) at 1–800–877–8339 between 8 a.m. and 8 p.m., Eastern time, Monday through Friday.

Information about the Department's funding opportunities, including copies of application notices for discretionary grant competitions, can be viewed on the Department's electronic bulletin board (ED Board), telephone (202) 260–9950; or on the Internet Gopher Server at GOPHER.ED.GOV (under Announcements, Bulletins and Press Releases). However, the official application notice for a discretionary grant competition is the notice published in the **Federal Register**.

Program Authority: 20 U.S.C. 1135f.

Dated: May 9, 1994.

David A. Longanecker,

Assistant Secretary for Postsecondary Education.

[FR Doc. 94–11923 Filed 5–16–94; 8:45 am]

BILLING CODE 4000–01–P

DEPARTMENT OF ENERGY

Withdrawal of Notice of Intent to Prepare Environmental Impact Statement for Hawaii Geothermal Project

AGENCY: Office of the Assistant Secretary for Energy Efficiency and Renewable Energy, DOE.

ACTION: Notice.

SUMMARY: The Department of Energy (DOE) today withdraws its Notice of Intent (57 FR 5433, February 14, 1992) to prepare an Environmental Impact Statement for Phases 3 and 4 of the Hawaii Geothermal Project as defined by the State of Hawaii in its April 1989 proposal to Congress.

FOR FURTHER INFORMATION CONTACT: Roland R. Kessler, Director, Office of Renewable Energy Conversion, Energy Efficiency and Renewable Energy, (EE–12) Room 5H–095, 1000 Independence Ave. SW., Washington, DC 20585.

SUPPLEMENTARY INFORMATION: The Hawaii Geothermal Project consisted of four phases: Phase 1—exploration and testing of the geothermal resource beneath the slopes of the active Kilauea volcano on the Big Island; Phase 2—demonstration of deep-water power cable technology in the Alenuihaha Channel between the Big Island and Maui; Phase 3—verification and characterization of the geothermal resource on the Big Island; and Phase 4—construction and operation of commercial geothermal power production facilities on the Big Island with overland and submarine transmission of electricity from the Big Island to Oahu and other islands. Phase 1 was completed in approximately 1986 and Phase 2 was completed in 1991.

On February 14, 1992, the Department of Energy published a Notice of Intent to prepare an Environmental Impact Statement for Phases 3 and 4 of the Hawaii Geothermal Project. Public scoping meetings were held from March 7 through March 16, 1992, and an Implementation Plan was issued in April 1993.

On December 8, 1992, the Governor of the State of Hawaii approved a geothermal policy statement issued by the Hawaii Department of Business and Economic Development and Tourism indicating that Hawaii is no longer pursuing or planning to pursue the geothermal/cable project that it had proposed in 1989. Thus, DOE considers the project to be terminated. In addition, no new Federal funds have been appropriated for this project beyond those originally appropriated and designated by the Congress for environmental analysis. All funds previously appropriated have been expended. Since there is no longer a proposal for action, the Department is withdrawing its notice of intent to prepare an Environmental Impact Statement.

Background scientific data on the affected environment collected by the Department of Energy and cooperating agencies for use in the preparation of the Environmental Impact Statement will be made available for future scientific research. Copies of documents containing the data will be placed in the following reading rooms in the near future:

Department of Business, Economic Development & Tourism Library, 220 South King Street, Fourth Floor, Honolulu, Hawaii 96804

Department of Business, Economic Development & Tourism, Hilo Office, Century Building, 80 Pauahi Street, Room 207, Hilo, Hawaii 96720

Department of Business, Economic Development & Tourism, Information Office, 220 South King Street, Suite 1100, Honolulu, Hawaii 96813

Department of Business, Economic Development & Tourism, Geothermal Office, Financial Plaza of the Pacific, 130 Merchant Street, Suite 1060, Honolulu, Hawaii 96813

Department of Business, Economic Development & Tourism, Energy Division, Publications Section, 335 Merchant Street, Room 110, Honolulu, Hawaii 96813

Hana Public and School Library, Hana Highway, Hana, Hawaii 96713

Hawaii State Library, Hawaii Document Center Unit, 634 Pensacola Street, Honolulu, Hawaii 96814

Hawaii Energy Extension Service, Hawaii Business Center, 99 Aupuni Street, Room 214, Hilo, Hawaii 96720

Hilo Public Library, 300 Waianuenue Avenue, Hilo, Hawaii 96721–0647

Kahuku Public and School Library, 56490 Kam Highway, Kahuku, Hawaii 96731

Kahului Public Library, 90 School Street, Kahului, Hawaii 96732

Kailua-Kona Public Library, 75–138 Hualalai Road, Kailua-Kona, Hawaii 96740

Kauai Office of Economic Development, 4444 Rice Street, Room 230, Lihue, Hawaii 96766

Lihue Public Library, 4391–A Rice Street, Lihue, Hawaii 96766
Maui Energy Extension Service, 200 South High Street, Wailuku, Hawaii 96793
Molokai Public Library, Ala Maloma Street, Kaunakakai, Hawaii 96748
Mountain View Public and School Library, Highway 11, Mountain View, Hawaii 96771
Pahala Public and School Library, Pakalana Street, Pahala, Hawaii 96777
Pahoa Public and School Library, 15–3038 Puna Road, Pahoa, Hawaii 96778
Pearl City Public Library, 1138 Waimano Home Road, Pearl City, Hawaii 96782
U.S. Department of Energy, Freedom of Information Public Reading Room, Room 1E–190, 1000 Independence Ave. SW., Washington, DC 20585
U.S. Department of Energy, Pacific Site Office, Prince Kuhio Building, Room 4322, 300 Ala Moana Blvd., Honolulu, Hawaii 96813
U.S. Department of Energy, Oakland Operations Office, Public Reading Room, 1301 Clay Street, Oakland, California 94612–5208
Waimanelo Public and School Library, 41–1320 Kalanianaole Highway, Waimanalo, Hawaii 96795

Issued in Washington, DC on May 10, 1994.

Frank M. Stewart, Jr.,

Acting Chief of Staff, Energy Efficiency and Renewable Energy.

[FR Doc. 94–11960 Filed 5–16–94; 8:45 am]

BILLING CODE 6450–01–P

Testing and Evaluation of Electric Vehicles As Part of the Department of Energy's Site Operators Program: Financial Assistance Award No. DE–FC07–94ID13309

AGENCY: Department of Energy, Idaho Operations Office.

ACTION: Notice of intent.

SUMMARY: Notice is hereby given that the U.S. Department of Energy's (DOE) Office of Conservation and Renewable Energy through the DOE Idaho Operations Office intends to negotiate and award on a noncompetitive basis, Cooperative Agreement No. DE–FC07–94ID13309 to the Department of Water and Power, City of Los Angeles, CA (Recipient). The award has an estimated overall total value of $320.000, of which DOE's share will be approximately $112,288. The award will allow the Recipient to continue R&D efforts started under prior DOE Grant Number DE–FG07–90ID12942, which was satisfactorily completed on March 31, 1994. Also, it will allow the Recipient to continue participating as a member of the U.S. Department of Energy's "Electric and Hybrid Vehicle Site Operators Program." The Recipient's project is entitled, "Test and Evaluation of Electric Vehicles."

FOR FURTHER INFORMATION CONTACT:

Dallas L. Hoffer, Contract Specialist, (208) 526–0014; U.S. Department of Energy, Idaho Operations Office, 850 Energy Drive, Mail Stop 1221, Idaho Falls, ID 83401–1563.

BACKGROUND: DOE continues to support work directed toward providing the nation with viable alternatives to the internal combustion engine (ICE) as an energy source for transportation.

The Electric and Hybrid Vehicle Site Operator Program was chartered to provide DOE assistance and support in the test and evaluation of new technologies, which includes new vehicles and components, as they become available. The work anticipated under the new award is expected to have a significant impact towards meeting that goal. The project will benefit the public in two ways. First, it will provide for the test and evaluation of vehicle designs, furthering the effort to provide the nation with a commercially viable electric vehicle, and second, it will support the objectives of the Los Angeles Basin Clean Air Initiative to identify and test alternate fueled vehicles. The non-competitive award justification is Criteria (A) and (B) of 10 CFR 600.7(b)(2)(i), as follows:

(A) The activity to be funded is necessary to the satisfactory completion of, or is a continuation or renewal of, and activity presently being funded by DOE or another Federal agency, and for which completion for support would have a significant adverse effect on continuity or completion of the activity.

(B) The activity(ies) is (are) being or would be conducted by the applicant using its own resources or those donated or provided by third parties; however, DOE support of that activity would enhance the public benefits to be derived and DOE knows of no other entity which is conducting or is planning to conduct such an activity(ies). The Statutory Authority for the new award is Public Law 95–224 and Public Law 97–258 to enter into discretionary financial assistance; Public Law 93–577, Federal Non-Nuclear Energy R&D Act of 1974.

Procurement Request Number: 07–94ID13309.000

May 4, 1994.

Michael L. Adams,

Acting Director Procurement Services Division.

[FR Doc. 94–11458 Filed 5–16–94; 8:45 am]

BILLING CODE 6450–01–M

Morgantown Energy Technology Center Financial Assistance Award to West Virginia University; Grant

AGENCY: Morgantown Energy Technology Center (METC), U.S. Department of Energy (DOE).

ACTION: Notice of acceptance of an unsolicited financial assistance application for Grant award.

SUMMARY: Based upon a determination made pursuant to 10 CFR 600.7(b)(2)(i), (D) the DOE, Morgantown Energy Technology Center, gives notice of its plans to award a twelve month Grant to West Virginia University, Morgantown, WV, in the amount of $50,000.

FOR FURTHER INFORMATION CONTACT: Crystal A. Sharp, IO7, U.S. Department of Energy, Morgantown Energy Technology Center, P.O. Box 880, Morgantown, West Virginia 26507–0880, telephone (304) 291–4386, Procurement Request No. 21–93MC31182.000.

SUPPLEMENTARY INFORMATION: The participant will develop methodology for describing natural fractures in tight gas and related reservoirs based on geological data and the mathematics of fractals.

Louie L. Calaway,

Director, Acquisition and Assistance Division, Morgantown Energy Technology Center.

[FR Doc. 94–11961 Filed 5–16–94; 8:45 am]

BILLING CODE 6450–01–P

Office of Arms Control and Nonproliferation

Proposed Subsequent Arrangement With Taiwan

Pursuant to section 131 of the Atomic energy Act of 1954, as amended (42 U.S.C. 2160), notice is hereby given of a proposed "subsequent arrangement", to be carried out in Taiwan under the Agreement for Cooperation Concerning Civil Uses of Atomic Energy, signed April 4, 1972, as amended.

The subsequent arrangement to be carried out under the above-mentioned agreement involves approval for the joint determination that safeguards may be effectively applied to the Hot Laboratory at the Institute of Nuclear Energy Research in Taiwan and approval of the alteration in form or

content of irradiated fuel elements from the Kuo-Sheng Nuclear Power Station. The aforementioned determination will be made, and the approval for the post-irradiation examination for the agreed upon program from the Kuo-Sheng Nuclear Power Station will be granted, for the period ending December 31, 1996.

In accordance with section 131 of the Atomic Energy Act of 1954, as amended, it has been determined that this subsequent arrangement will not be inimical to the common defense and security.

This subsequent arrangement will take effect no sooner than fifteen days after the date of publication of this notice.

Issued in Washington, DC, on May 12, 1994.

Salvador N. Ceja,

Acting Director, Office of Nonproliferation Policy, Office of Arms Control and Nonproliferation.

[FR Doc. 94–11959 Filed 5–16–94; 8:45 am]

BILLING CODE 6450–01–M

Federal Energy Regulatory Commission

[Projects Nos. 2448–011, 2447–008, 2449–007, 2453–003, 2450–005, and 2436–007 Michigan]

Consumers Power Co.; Availability of Final Multiple Project Environmental Assessment

May 11, 1994.

In accordance with the National Environmental Policy Act of 1969 and the Federal Energy Regulatory Commission's (Commission's) regulations, 18 CFR Part 380 (Order No. 486, 52 FR 47897), the Office of Hydropower Licensing has reviewed the six applications for major license for the existing Mio, Alcona, Loud, Five Channels, Cooke, and Foote Hydroelectric Projects, located on the Au Sable River in Oscoda, Alcona, and Iosco Counties, in east-central Michigan, and has prepared a final Multiple Project Environmental Assessment (MPEA) for the projects in cooperation with the U.S. Department of Agriculture, Forest Service, Huron-Manistee National Forests.

On October 22, 1993, a draft MPEA was issued and distributed to all parties, and comments were requested on the draft MPEA to be filed within 45 days of the **Federal Register** notice date, November 4, 1993. A 45-day extension of time to comment was granted at the request of two commenting parties. All comments that were filed have been considered in the final MPEA.

In the final MPEA, the Commission and Forest Service staffs analyzed the site-specific and cumulative environmental effects of the existing projects, as proposed in a Settlement Agreement reached between Consumers Power Company and the state and Federal resource agencies. The Commission staff has concluded that approval of the applications for new license, with appropriate enhancement measures, would not constitute a major Federal action significantly affecting the quality of the human environment.

Copies of the final MPEA are available in the Public Reference Branch, Room 3104, of the Commission's offices at 941 North Capitol Street, NE., Washington, DC 20426.

Lois D. Cashell,

Secretary.

[FR Doc. 94–11891 Filed 5–16–94; 8:45 am]

BILLING CODE 6717–01–M

[Project No. 2689–001 Wisconsin]

Scott Paper Co.; Availability of Final Environmental Assessment

May 11, 1994.

In accordance with the National Environmental Policy Act of 1969 and the Federal Energy Regulatory Commission's (Commission's) regulations, 18 CFR part 380 (Order No. 486, 52 FR 47897), the Office of Hydropower Licensing has reviewed the application for new license for the existing Oconto Falls Hydroelectric Project located on the Oconto River in Oconto County, near the City of Oconto Falls, Wisconsin, and has prepared a Final Environmental Assessment (FEA) for the proposed project. In the FEA, the Commission's staff has analyzed the potential environmental impacts of the proposed project and has concluded that approval of the proposed project, with appropriate mitigative measures, would not constitute a major federal action significantly affecting the quality of the human environment.

Copies of the FEA are available for review in the Public Reference Branch, Room 3308, of the Commission's offices at 941 North Capitol Street, NE., Washington, DC 20426.

Lois D. Cashell,

Secretary.

[FR Doc. 94–11892 Filed 5–16–94; 8:45 am]

BILLING CODE 6717–01–M

Project No. 2705–003 Washington

Seattle City Light; Intent To Prepare an Environmental Assessment and Conduct Public Scoping Meetings and Site Visit

May 11, 1994.

The Federal Energy Regulatory Commission (FERC) has received an application for relicensing of the existing Newhalem Creek Hydroelectric Project, Project No. 2705–003. The project is located on Newhalem Creek in Whatcom County, Washington.

The FERC staff intends to prepare an Environmental Assessment (EA) on this hydroelectric project in accordance with the National Environmental Policy Act.

In the EA, we will consider both site-specific and cumulative environmental impacts of the project and reasonable alternatives, and we will include an economic, and engineering analysis.

A draft EA will be issued and circulated for review to all interested parties. All timely filed comments on the draft EA will be analyzed by the staff and considered in the final EA. The staff's conclusions and recommendations will then be presented for consideration by the Commission in reaching its final licensing decision.

Scoping Meetings

Staff will be holding two scoping meetings. A scoping meeting oriented towards the public will be held on June 1, 1994, at 7 pm, in Hearing Room "A", at the Skagit County Court House in Mount Vernon, Washington. A scoping meeting oriented towards the agencies will be held on June 2, 1994 at 1:30 pm in the Second Floor Conference Room of the 1111 Third Avenue Building, 1111 Third Avenue, Seattle, Washington.

Interested individuals, organizations, and agencies are invited to attend either or both meetings and assist the staff in identifying the scope of environmental issues that should be analyzed in the EA.

To help focus discussions at the meetings, a scoping document outlining subject areas to be addressed in the EA will be mailed to agencies and interested individuals on the FERC mailing list. Copies of the scoping document will also be available at the scoping meetings.

Objectives

At the scoping meetings the FERC staff will: (1) Identify preliminary environmental issues related to the proposed project; (2) identify preliminary resource issues that are not important and do not require detailed

analysis; (3) identify reasonable alternatives to be addressed in the EA; (4) solicit from the meeting participants all available information, especially quantified data, on the site-specific cumulative resource issues; and (5) encourage statements from experts and the public on issues that should be analyzed in the EA, including points of view in opposition to, or in support of, the staff's preliminary views.

Procedures

The meeting will be recorded by a court reporter and all statements (oral and written) will become a part of the formal record of the Commission proceedings on the Newhalem Creek hydroelectric project. Individuals presenting statements at the meetings will be asked to clearly identify themselves for the record.

Individuals, organizations, and agencies with environmental expertise and concerns are encouraged to attend the meetings and assist the staff in defining and clarifying issues to be addressed in the EA.

Persons choosing not to speak at the meetings, but who have views on the issues or information relevant to the issues, may submit written statements for inclusion in the public record at the meeting. In addition, written comments may be filed with Secretary, Federal Energy Regulatory Commission, 825 North Capitol Street, NE., Washington, DC, 20426 until July 5, 1994.

All written correspondence should clearly show the following caption on the first page: Newhalem Creek Hydroelectric Project, FERC No. 2705–003.

Intervenors—those on the Commission's service list for this proceeding (parties)—are reminded of the Commission's Rules of Practice and Procedures, requiring parties filing documents with the Commission, to serve a copy of the document on each person whose name appears on the official service list. Further, if a party or interceder files comments or documents with the Commission relating to the merits of an issue that may affect the responsibilities of a particular resource agency, they must also serve a copy of the document on that resource agency.

Site Visit:

A site visit to the Newhalem Creek Hydroelectric Project is planned for June 1, 1994. Those who wish to attend should plan to meet at the Seattle City Light Skagit Administration Building in Newhalem, Washington at 1 pm or contact John Costello, at (202) 219–2914 for details.

Any questions regarding this notice may be directed to John Costello, at (202) 219–2914.

Lois D. Cashell,

Secretary.

[FR Doc. 94–11887 Filed 5–16–94; 8:45 am]

BILLING CODE 6717–01–P

[Docket No. TM94–10–23–000]

Eastern Shore Natural Gas Company; Proposed Changes in FERC Gas Tariff

May 11, 1994.

Take notice that Eastern Shore Natural Gas Company (ESNG) tendered for filing on May 2, 1994, certain revised tariff sheets included in Appendix A attached to the filing. Such sheets are proposed to be effective May 1, 1994.

ESNG states that the above-referenced tariff sheets are being filed pursuant to § 154.309 of the Commission's regulations and §§ 21.2 and 21.4 of the General Terms and Conditions of ESNG's Gas Tariff to reflect decreases in ESNG's jurisdictional commodity and demand sales rates. Such decreases reflect lower prices being paid to ESNG's suppliers under its market responsive gas supply contracts and lower rates being charged by ESNG's upstream pipeline suppliers for firm transportation.

ESNG states its Commodity and Demand sales rates are decreased by $0.1461 and $0.7520 per dt, respectively, as compared to the rates filed in Docket No. TQ94–5–23–000, et. al.

ESNG further states it has "tracked" various storage rate changes made by Transcontinental Gas Pipe Line Corporation and Columbia Gas Transmission Corporation to their respective storage service rate schedules.

ESNG states that copies of the filing have been served upon its jurisdictional customers and interested State Commissions.

Any person desiring to be heard or to protest said filing should file a motion to intervene or protest with the Federal Energy Regulatory Commission, 825 North Capitol Street, NE., Washington, DC 20426, in accordance with Rule 211 and Rule 214 of the Commission's Rules of Practice and Procedure (18 CFR 385.211 and 385.214). All such motions or protests should be filed on or before May 18, 1994. Protests will be considered by the Commission in determining the appropriate action to be taken, but will not serve to make protestants parties to the proceeding. Any person wishing to become a party must file a motion to intervene. Copies of this filing are on file with the Commission and are available for public inspection.

Lois D. Cashell,

Secretary.

[FR Doc. 94–11898 Filed 5–16–94; 8:45 am]

BILLING CODE 6717–01–M

[Docket No. ES94–24–000]

Golden Spread Electric Cooperative, Inc.; Application

May 11, 1994.

Take notice that on May 3, 1994, Golden Spread Electric Cooperative, Inc., filed an application under Section 204 of the Federal Power Act seeking authorization to issue not more than $30 million of short-term notes during the period from July 28, 1994 through July 27, 1996, with maturity dates of one year or less from the date of issuance.

Any person desiring to be heard or to protest said filing should file a motion to intervene or protest with the Federal Energy Regulatory Commission, 825 North Capitol Street, NE., Washington, DC 20426 in accordance with Rules 211 and 214 of the Commission's Rules of Practice and Procedure (18 CFR 385.211 and 385.214). All such motions or protests should be filed on or before June 2, 1994. Protests will be considered by the Commission in determining the appropriate action to be taken, but will not serve to make the protestants parties to the proceeding. Any person wishing to become a party must file a motion to intervene. Copies of this filing are on file with the Commission and are available for public inspection.

Lois D. Cashell,

Secretary.

[FR Doc. 94–11890 Filed 5–16–94; 8:45 am]

BILLING CODE 6717–01–M

[Docket No. CP94–537–000]

Koch Gateway Pipeline Company; Request Under Blanket Authorization

May 11, 1994.

Take notice that on May 6, 1994, Koch Gateway Pipeline Company (Koch Gateway), P.O. Box 1478, Houston, Texas 77251–1478, filed in Docket No. CP94–537–000 a request pursuant to §§ 157.205 and 157.216 of the Commission's Regulations under the Natural Gas Act (18 CFR 157.205, 157.216) for authorization to abandon the pipeline and meter station formerly serving Vicksburg Chemical Plant (Vicksburg) in Warren County, Mississippi, under Koch Gateway's blanket certificate issued in Docket No. CP82–430–000 pursuant to section 7 of

the Natural Gas Act, all as more fully set forth in the request that is on file with the Commission and open to public inspection.

Koch Gateway proposes to abandon a six-inch tap and approximately 2,000 feet of pipeline. Koch Gateway will continue to serve Vicksburg through a second existing meter station.

Any person or the Commission's staff may, within 45 days after issuance of the instant notice by the Commission, file pursuant to Rule 214 of the Commission's Procedural Rules (18 CFR 385.214) a motion to intervene or notice of intervention and pursuant to § 157.205 of the Regulations under the Natural Gas Act (18 CFR 157.205) a protest to the request. If no protest is filed within the time allowed therefor, the proposed activity shall be deemed to be authorized effective the day after the time allowed for filing a protest. If a protest is filed and not withdrawn within 30 days after the time allowed for filing a protest, the instant request shall be treated as an application for authorization pursuant to section 7 of the Natural Gas Act.

Lois D. Cashell,

Secretary.

[FR Doc. 94–11888 Filed 5–16–94; 8:45 am]

BILLING CODE 6717–01–M

[Docket No. RP94–189–001]

Northwest Pipeline Corporation; Proposed Change in FERC Gas Tariff

May 11, 1994.

Take notice that on May 9, 1994, Northwest Pipeline Corporation (Northwest) tendered for filing as part of its FERC Gas Tariff, Third Revised Volume No. 1, the following tariff sheets, with a proposed effective date of April 24, 1994:

Substitute Second Revised Sheet No. 226.

Northwest states that the purpose of this filing is to comply with a Commission order issued on April 22, 1994 in Docket Nos. RP94–189–000 and RS92–69–000 with regard to changes to provisions relating to scheduling priority for mainline throughput and receipt and delivery point capacity.

Northwest states that a copy of this filing has been served upon all parties designated on the official service list as compiled by the Secretary in this proceeding and on all of Northwest's jurisdictional customers and affected state regulatory commissions.

Any person desiring to protest said filing should file a protest with the Federal Energy Regulatory Commission, 825 North Capitol Street, NE., Washington, DC 20426, in accordance with § 385.211 of the Commission's Rules of Practice and Procedure. All such protests should be filed on or before May 18, 1994. Protests will be considered by the Commission in determining the appropriate action to be taken, but will not serve to make protestants parties to the proceeding. Copies of this filing are on file with the Commission and are available for public inspection in the public reference room.

Lois D. Cashell,

Secretary.

[FR Doc. 94–11894 Filed 5–16–94; 8:45 am]

BILLING CODE 6717–01–M

[Docket No. RP94–185–001]

Northwest Pipeline Corporation; Proposed Change in FERC Gas Tariff

May 11, 1994.

Take notice that on May 9, 1994, Northwest Pipeline Corporation (Northwest) tendered for filing as part of this FERC Gas Tariff, Third Revised Volume No. 1, the following tariff sheets, with a proposed effective date of November 1, 1993:

Substitute First Revised Sheet No. 22.

Northwest states that the purpose of this filing is to comply with a Commission order issued on April 22, 1994 in Docket Nos. RP94–185–000 and RP93–5–000 regarding the reservation charge adjustment provisions of Northwest's tariff.

Northwest states that a copy of this filing has been served upon all parties designated on the official service list as compiled by the Secretary in this docket and upon all of Northwest's jurisdictional customers and affected state regulatory commissions.

Any person desiring to protest said filing should file a protest with the Federal Regulatory Commission, 825 North Capitol Street, NE., Washington, DC 20426, in accordance with § 384.211 of the Commission's Rules of Practice and Procedure. All such protests will be considered by the Commission in determining the appropriate action to be taken, but will not serve to make protestants parties to the proceeding. Copies of this filing are on file with the Commission and are available for public inspection in the public reference room.

Lois D. Cashell,

Secretary.

[FR Doc. 94–11893 Filed 5–16–94; 8:45 am]

BILLING CODE 6717–01–M

[Docket No. RP94–235–000]

Richfield Gas Storage System; Petition for Waiver

May 11, 1994.

Take notice that on May 5, 1994, Richfield Gas Storage System (Richfield) filed a requests for waiver or exemption of the downloadable file requirement imposed by Order No. 563.

Richfield states that it is willing to upgrade and standardize the information provided on its Electronic Bulletin Board (EBB) in order to enable a potential user to view standardized data sets in compliance with the requirements of Order No. 563, and that such action will be sufficient to fully advise shippers as to the availability of storage service on the Richfield system. Richfield further states that compliance with the electronic file downloading (EDI) required of Order No. 563 is not necessary on the Richfield system in order to achieve the Commission's order No. 636 goals.

Richfield states that the incremental expense of EDI is significant to Richfield, and the benefits to Richfield's customers are nonexistent given the nature of the Richfield system. Richfield requests that the Commission waive compliance with the EDI requirement while consideration of its petition is pending.

Any person desiring to be heard or to protest said filing should file a motion to intervene or protest with the Federal Energy Regulatory Commission, 825 North Capitol Street, NE., Washington, DC 20426, in accordance with 18 CFR 385.214 and 385.211 of the Commission's Rules and Regulations. All such motions or protests should be filed on or before May 18, 1994. Protests will be considered by the Commission in determining the appropriate action to be taken, but will not serve to make protestants parties to the proceeding. Any person wishing to become a party must file a motion to intervene. Copies of this filing are on file with the Commission and are available for public inspection in the public reference room.

Lois D. Cashell,

Secretary.

[FR Doc. 94–11896 Filed 5–16–94; 8:45 am]

BILLING CODE 6717–01–M

[Docket No. EG94-61-000]

Sarnia Cogeneration Joint Venture; Application for Commission Determination of Exempt Wholesale Generator Status

May 11, 1994.

On May 10, 1994, Sarnia Cogeneration Joint Venture (the "Applicant") whose address is c/o Mark Bradley, Dow Chemical Canada Inc., 1086 Modeland Road, P.O. Box 1012, Sarnia, Ontario, Canada N7T7K7, filed with the Federal Energy Regulatory Commission an application for determination of exempt wholesale generator status pursuant to part 365 of the Commission's regulations.

The Applicant states that it will be engaged directly and exclusively in the business of owning and operating one gas turbine and associated electric generator, a heat recovery steam generator, five fired steam boilers and five steam turbine generators, located at Sarnia, Province of Ontario, Canada, with an aggregate rated electric generating capacity of approximately 120 megawatts, and selling electric energy exclusively at wholesale. The Applicant requests a determination that the Applicant will be an exempt wholesale generator under section 32(a)(1) of the Public Utility Holding Company Act of 1935.

Any person desiring to be heard concerning the application for exempt wholesale generator status should file a motion to intervene of comments with the Federal Energy Regulatory Commission, 825 North Capitol Street, NE., Washington, DC 20426, in accordance with Rules 211 and 214 of the Commission's Rules of Practice and Procedure. The Commission will limit its consideration of comments to those that concern the adequacy or accuracy of the application. All such motions and comments should be filed on or before May 20, 1994 and must be served on the applicant. Any person wishing to become a party must file a motion to intervene. Copies of this filing are on file with the Commission and are available for public inspection.

Lois D. Cashell,

Secretary.

[FR Doc. 94-11889 Filed 5-16-94; 8:45 am]

BILLING CODE 6717-01-M

[Docket Nos. RP94-201-000, RP88-228-042 and RP94-175-000]

Tennessee Gas Pipeline Company; Technical Conference

May 11, 1994.

Pursuant to the Commission's order issued on April 29, 1994, in the above-captioned proceeding,[1] a technical conference will be convened to address the issues raised by Tennessee Gas Pipeline Company's filing. The conference will be held on Wednesday, June 8, 1994, at 10 a.m. in a room to be designated at the offices of the Federal Energy Regulatory Commission, 810 First Street, NE., Washington, DC 20426.

All interested persons and Staff are permitted to attend.

Lois D. Cashell,

Secretary

[FR Doc. 94-11895 Filed 5-16-94; 8:45 am]

BILLING CODE 6717-01-M

[Docket No. TM90-3-42-009]

Transwestern Pipeline Company; Refund Report

May 11, 1994.

Take notice that on April 25, 1994, Transwestern Pipeline Company (Transwestern) tendered for filing a refund report.

Pursuant to the Federal Energy Regulatory Commission's orders dated August 6, 1993 and March 25, 1994 in Docket Nos. TM90-3-42-000, et al., Transwestern was required to refund to Southern California Gas Company (SoCal) and Williams Natural Gas Company (Williams) the following amounts: (1) $4,200,000 of producer pricing settlement amounts, (2) $2,219,314 of prior period adjustments, (3) $510,146 in interest related to the pre-May 11, 1988 period from its direct bill, and (4) $2,706,098 in non-PGA settlement costs. Transwestern was also required to reallocate $26,217.66 in post-February 1, 1989 gas costs from Williams to SoCal.

Transwestern states that it is filing its report to show that it has made the refunds on April 22, 1994, as required by the orders.

Any person desiring to protest said filing should file a protest with the Federal Energy Regulatory Commission, 825 North Capitol Street, NE., Washington, DC 20426, in accordance with § 385.211 of the Commission's Rules and Regulations. All such protests should be filed on or before May 18, 1994. Protests will be considered by the Commission in determining the appropriate action to be taken, but will not serve to make protestants parties to the proceeding. Copies of this filing are on file with the Commission and are available for public inspection in the public reference room.

Lois D. Cashell,

Secretary.

[FR Doc. 94-11897 Filed 5-16-94; 8:45 am]

BILLING CODE 6717-01-M

[1] 67 FERC ¶61,121 (1994).

ENVIRONMENTAL PROTECTION AGENCY

[FRL-4885-4]

D.L. Mud, Inc., Superfund Site: Proposed Settlement

AGENCY: Environmental Protection Agency.

ACTION: Notice.

SUMMARY: Under section 122(h) of the Comprehensive Environmental Response, Compensation, and Liability Act (CERCLA), the Environmental Protection Agency (EPA has agreed to settle claims for past response costs at the D.L. Mud, Inc., Superfund Site in Vermilion Parish, Louisiana, with the following parties: The DOW Chemical Company, Dowell Schlumberger, Incorporated.

EPA will consider public comments on the proposed settlement for 30 days. EPA may withdraw from or modify the proposed settlement should such comments disclose facts or considerations which indicate the proposed settlement is inappropriate, improper, or inadequate. Copies of the proposed settlement are available from: Mr. James VanBuskirk, AR/LA Superfund Enforcement section (6H-EA), U.S. EPA, Region 6, 1445 Ross Avenue, Dallas, Texas 75202-2733, telephone (214) 655-6767.

Written comments may be submitted to the person above by 30 days from the date of publication.

Dated: May 5, 1994.

W.B. Hathaway,

Regional Administrator, U.S. EPA, Region 6.

[FR Doc. 94-11985 Filed 5-16-94; 8:45 am]

BILLING CODE 6560-50-M

[FRL-4885-3]

Clean Water Act (CWA) 304(l): Availability of List Submissions and Proposed Approval Decisions

AGENCY: U.S. Environmental Protection Agency (U.S. EPA).

ACTION: Notice of availability.

SUMMARY: This notice announces the availability of a list submitted to U.S. EPA pursuant to section 304(l)(1)(C) of the Clean Water Act ("CWA"), 33 U.S.C. 1314(l)(1)(C) as well as U.S. EPA's proposed approval decision, and request for public comment.

DATES: Comments must be submitted to U.S. EPA on or before June 16, 1994.

ADDRESSES: Copies of these items can be obtained by writing or calling: Mr. Howard Pham, U.S. EPA-Region 5, 304(l) Coordinator, U.S. Environmental Protection Agency-Region 5, Water Division (Mail Code WQP–16J), 77 West Jackson Blvd., Chicago, Illinois 60604–3507, Telephone: (312) 353–2310. Comments on these items should be sent to Howard Pham, U.S. EPA–Region 5 at the address given above.

FOR FURTHER INFORMATION CONTACT: Howard Pham at the address and telephone number given in **ADDRESSES.**

SUPPLEMENTARY INFORMATION: Section 304(l) of the CWA, 33 U.S.C. 1314(l), required each state, within two years after February 4, 1987, to submit to the U.S. EPA, three lists of waters, including a list of those waters that the state does not expect to achieve applicable water quality standards, after application of technology-based controls, due to discharges of toxic pollutants from point sources (the "B List" or "Short List"). 33 U.S.C. 1314(l)(1)(B). The second, or "Mini" list consists of waters that are not meeting the new water quality standards developed under Section 303(c)(2)(B) for toxic pollutants because of pollution from point and nonpoint sources. 33 U.S.C. 1314(l)(1)(A)(i). The third, or "Long" list includes all waters on the other two lists, plus any waters which, after the implementation of technology-based controls, are not expected to meet the water quality goals of the Act. 33 U.S.C. 1314(l)(1)(A)(ii).

For each water segment identified in these lists, the state was required, by February 4, 1989, to submit a "C List" specifying point sources discharging toxic pollutants believed to be preventing or impairing such water quality. 33 U.S.C. 1314(l)(1)(C).

For each point source identified on the state's C list as discharging toxic pollutants into a water segment on the state's B list, the state was further required to submit to U.S. EPA an individual control strategy (ICS) that the state determined would serve to reduce point source discharges of toxic pollutants to the receiving water to a degree sufficient to attain water quality standards in that water within three years after the date of the establishment of the ICS. 33 U.S.C. 1314(l)(1)(D).

U.S. EPA initially interpreted the statute to require states to identify on the C list, only those facilities that discharge toxic pollutants believed to be impairing waters listed on the B list. *In Natural Resources Defense Council (NRDC)* v. *U.S. EPA*, the Ninth Circuit Court of Appeals remanded that portion of the regulation and directed U.S. EPA to amend the regulations to require the states to identify all point sources discharging any toxic pollutant that is believed to be preventing or impairing water quality of any stream segment listed on any of the three lists of waters, and to indicate the amount of the toxic pollutant discharges by each source. See *NRDC* v. *U.S. EPA*, 915 F.2d 1313, 1323–24 (9th Cir. 1990). U.S. EPA amended 40 CFR 130.10(d)(3) accordingly. See 57 Fed. Reg. 33040 (July 24, 1992).

Consistent with U.S. EPA's amended regulation, the State of Wisconsin submitted on May 4, 1992 to U.S. EPA, for approval, a response on the need to revise the listing decisions under Section 304(l)(1)(C). The State of Wisconsin did not add any point sources to its list because it believed that its original process listed all appropriate point sources.

U.S. EPA's review of Wisconsin's submittal identified one facility which should be added to Wisconsin's 304(l) facility list. Ambient data from 1989 show the Lower Fox River to be impaired as a result of polychlorinated biphenyls (PCBs) contamination. Effluent from Fort Howard Paper Corporation showed net addition of PCBs to the river based on 1989 data. While not sufficient to cause a listing decision in our 1990 notice, it is now sufficient to cause Fort Howard's facility to be listed on the 304(l) facility list in accordance with the 1990 Court remand in *NRDC* v. *U.S. EPA*.

Based upon the above justification, the State of Wisconsin revised its response and on December 8, 1993, added Fort Howard Paper, Corp. (W10001848) to the facility list. The pollutant of concern is PCBs.

U.S. EPA notes that Fort Howard Paper's existing National Pollutant Discharge Elimination System permit is an acceptable ICS. That existing permit required significant reductions in the discharge of PCBs from the previous permit.

U.S. EPA today proposes to approve the revised facility list for Wisconsin. U.S. EPA solicits public comment on the approval decision.

Dated: April 29, 1994.

Valdas V. Adamkus,

Regional Administrator.

U.S. EPA REGION 5—SECTION 304(l) ADDITIONAL LISTINGS/REVISIONS

State	Waterbody name	NPDES No.	Discharger name	Pollutants of concern
WI	Lower Fox River	W10001848	Fort Howard Paper	Polychlo-rinated biphenyls.

[FR Doc. 94–11986 Filed 5–16–94; 8:45 am]

BILLING CODE 6560–50–P

FARM CREDIT ADMINISTRATION

Market Access Agreement

AGENCY: Farm Credit Administration.

ACTION: Notice of market access agreement; request for comments.

SUMMARY: The Farm Credit Administration (FCA) is publishing for comment a Market Access Agreement (Agreement) to be entered into by all of the banks of the Farm Credit System (System) and the Federal Farm Credit Banks Funding Corporation (Funding Corporation). The Agreement is designed to set forth the understanding of the parties and to represent the legal obligation of each of the parties regarding their respective rights and responsibilities when the financial condition of a bank falls below specified levels. The Agreement is designed to establish an orderly process for addressing such situations and to minimize the possibility of market disruption or further risk to the other parties to the Agreement. The FCA is seeking comments from the public on the Agreement and will take into consideration those comments prior to

granting final approval to the Agreement.

DATES: Written comments must be received on or before June 16, 1994.

ADDRESSES: Comments should be submitted in writing, in triplicate, to Jean Noonan, General Counsel, Office of General Counsel, Farm Credit Administration, McLean, Virginia 22102–5090. Copies of all communications received will be available for examination by interested parties in the Office of General Counsel, Farm Credit Administration.

FOR FURTHER INFORMATION CONTACT:

Jean Noonan, General Counsel, Office of General Counsel, Farm Credit Administration, McLean, VA 22102–5090, (703) 883–4020, TDD (703) 883–4444, or

Gary L. Norton, Assistant General Counsel, Regulatory Operations Division, Office of General Counsel, Farm Credit Administration, McLean, VA 22102–5090, (703) 883–4020, TDD (703) 883–4444.

SUPPLEMENTARY INFORMATION: The Agreement sets forth the understanding of the parties and will legally bind the signatories to the contract by establishing each party's respective rights and responsibilities in the event of the decline in the financial condition of one of the banks beyond the levels specified in the Agreement. This Agreement is to be entered into among each of the banks of the System and the Funding Corporation. The Agreement provides that it will not be implemented until it is approved by the FCA and the Farm Credit System Insurance Corporation (FCSIC) expresses its support for the Agreement. Prior to granting final approval to the Agreement, the FCA is publishing the Agreement for comment by any interested member of the public. The FCA will take these comments into consideration prior to approving the Agreement.

The Agreement states that the parties propose to enter into the Agreement based on their recognition of the joint and several liability of the banks on Systemwide debt securities and because of their ultimate responsibility and that of their affiliated associations to make additional premium payments into the Farm Credit System Insurance Fund if monies in the fund are used to pay the principal or interest on Systemwide debt securities or assist financially troubled banks. In light of that, each bank has a significant interest in controlling the risk associated with the level of borrowing by any bank facing financial difficulty. The banks further recognized that there is a need to provide some flexibility for dealing with the specific facts and circumstances that may face a bank that is in financial difficulty. The parties also recognize that under the Farm Credit Act of 1971, as amended, (Act) the Funding Corporation has the responsibility to determine, subject to the approval of the FCA, the conditions of participation by each of the several banks in each issue of Systemwide debt securities and that the Funding Corporation has adopted a market access and risk alert program to fulfill its understanding of its responsibilities under the Act.

In addition, the parties recognize the authority of the FCA under section 5.17(a)(10) of the Act to exercise its enforcement authorities to ensure the safety and soundness of System institutions and the FCA's authorities under sections 4.2 and 4.9 of the Act to approve the issuance of Systemwide debt securities. The parties also recognize the authority of the FCSIC under section 5.61 of the Act to assist institutions experiencing financial difficulties.

In summary, the Agreement establishes certain financial thresholds at which conditions are placed on the activities of a bank or the bank's access to participation in Systemwide obligations is either restricted or curtailed. The Agreement establishes three categories, which are based on each bank's collateral position, permanent capital position, and scores under the Contractual Inter-bank Performance Agreement (CIPA).

As a bank's financial condition declines, it moves into Category I then Category II and finally Category III. When a bank reaches Category I, it is required to provide certain information to a committee of bank and Funding Corporation representatives established under the Agreement, the Monitoring and Advisory Committee, including information as to how it is going to improve its financial condition. When a bank reaches Category II, in addition to being required to provide additional information, the bank's access to the markets is limited to only those amounts necessary for the bank to be able to roll over its debt. When the bank reaches Category III, the bank is precluded from joining in the issuance of Systemwide obligations.

The Agreement includes provisions that enable a bank in Category II or III to request the opportunity to continue its access to the market. The Agreement also provides that the FCA may override a decision to impose Category III prohibitions on access to the market for a period of 60 days, which may be renewed for an additional 60-day period.

In February 1993 the boards of directors of the banks and the Funding Corporation approved a draft Agreement and submitted the Agreement to the FCA and the FCSIC for approval. On September 9, 1993 the FCA Board granted preliminary approval to the Agreement subject to certain conditions. The conditions in the preliminary approval required the Agreement to be modified as follows:

1. Provide for the periodic review of the Agreement by the parties.
2. Include at least one of the independent directors of the Funding Corporation on the Monitoring and Advisory Committee and as part of the decision group.
3. Provide that a decision to deny market access because of a Category III trigger is effective only if the FCA does not veto the decision within 30 days from the end of the forbearance process and that the FCA and the FCSIC have been so notified.
4. Provide that no bank could challenge a conservatorship or receivership on the grounds that market access had been restricted or denied pursuant to the Agreement.
5. Clarify that the Agreement does not apply to a bank in conservatorship or receivership, thereby ensuring that the FCSIC, when acting as receiver or conservator, would be able to access the market to the same extent as if the Agreement were not in place.
6. Preclude the banks from gaining access to information involving communications with the FCA or the FCSIC without the consent of the affected agency.
7. Require that all information provided pursuant to the Agreement and the minutes of the Monitoring and Advisory Committee be retained by the Funding Corporation to facilitate their review by the FCA or the FCSIC.
8. Make clear that the FCA's approval of the agreement in no way restricts the statutory rights of the FCA or the FCSIC.
9. Delete the FCA and the FCSIC as parties to the Agreement.

In addition, the FCA provided that the Agreement would be published in the **Federal Register** for public comment before final approval.

Following the FCA's conditional preliminary approval, the System banks and the Funding Corporation modified the Agreement to bring the Agreement into conformance with the FCA's conditions. The FCA reviewed the Agreement as revised, and agrees that it complies with the FCA's conditions. Thereafter, the boards of directors of each of the banks and of the Funding

Corporation adopted a resolution whereby each party agrees to enter into the Agreement in the form submitted to the FCA, subject to the FCA's approval. The resolution of each party provides that if the FCA requires modifications to the Agreement in response to public comments, the resolutions shall be ineffective and each Board shall consider what further action to take.

Based on the foregoing, the FCA is now seeking public comment on the Agreement as set forth below:

MARKET ACCESS AGREEMENT
AMONG
AGRIBANK, FCB,
FARM CREDIT BANK OF BALTIMORE,
FARM CREDIT BANK OF COLUMBIA,
FARM CREDIT BANK OF OMAHA,
FARM CREDIT BANK OF SPOKANE,
FARM CREDIT BANK OF SPRINGFIELD,
FARM CREDIT BANK OF TEXAS,
FARM CREDIT BANK OF WICHITA,
NATIONAL BANK FOR COOPERATIVES (COBANK),
ST. PAUL BANK FOR COOPERATIVES,
SPRINGFIELD BANK FOR COOPERATIVES,
WESTERN FARM CREDIT BANK
AND
FEDERAL FARM CREDIT BANKS FUNDING CORPORATION

This MARKET ACCESS AGREEMENT is entered into among Agribank, FCB, the Farm Credit Bank of Baltimore, the Farm Credit Bank of Columbia, the Farm Credit Bank of Omaha, the Farm Credit Bank of Spokane, the Farm Credit Bank of Springfield, the Farm Credit Bank of Texas, the Farm Credit Bank of Wichita, the National Bank for Cooperatives (CoBank), the St. Paul Bank for Cooperatives, the Springfield Bank for Cooperatives, the Western Farm Credit Bank and the Federal Farm Credit Banks Funding Corporation.

Whereas, the Banks concur that, because of their joint and several liability on Systemwide Debt Securities, and because of their ultimate responsibility, and that of their constituent Associations, to make additional premium payments into the Insurance Fund if monies in the Insurance Fund are used to pay principal or interest on Systemwide Debt Securities or assist financially troubled Banks, each Bank has a significant stake in the financial strength of the others and a significant interest in controlling the risks associated with the level of borrowing by Banks facing financial difficulty; and

Whereas, the Parties also recognize that it is important to take account of the unique facts and circumstances in each actual instance of a Bank's facing financial difficulty; and

Whereas, Section 4.9(b)(2) of the Act provides that, subject to the approval of FCA, the Funding Corporation, acting for the Banks, "shall determine the * * * conditions of participation by the several banks in each issue" of Systemwide Debt Securities; and

Whereas, certain Parties have taken differing positions on whether Section 4.9(b)(2) of the Act authorizes, and whether it requires, the Funding Corporation to put in place a program for restricting or prohibiting Banks under certain circumstances from participating in issues of Systemwide Debt Securities; and

Whereas, the Funding Corporation has adopted and maintained in place a Market Access and Risk Alert Program designed to fulfill what it has understood to be its responsibilities under Section 4.9(b)(2) of the Act with respect to determining conditions of participation; and

Whereas, the Banks and the Funding Corporation have been desirous of arriving at an agreement regarding market access that would render it unnecessary to resolve the aforementioned differing views of Section 4.9(b)(2) of the Act; and

Whereas, an Ad Hoc Committee consisting of a director and an executive officer of each Bank met on December 4, 1992 and adopted guidelines for such an agreement and appointed a Work Group (the "Work Group") to prepare a draft agreement; and

Whereas, the Work Group deliberated during December 1992 and January 1993, and presented a draft agreement to the Presidents' Planning Committee on January 15, 1993; and

Whereas, the Presidents' Planning Committee suggested certain revisions to that draft agreement, and the Work Group revised the draft agreement and submitted it to the Ad Hoc Committee; and

Whereas, the Ad Hoc Committee met on January 23, 1993 and approved the revised draft agreement for presentation to the Banks and the Funding Corporation; and

Whereas, the boards of directors of the Banks and of the Funding Corporation approved the revised draft agreement in principle at meetings in February 1993; and

Whereas, thereafter, the revised draft agreement was considered by FCA and the Insurance Corporation; and

Whereas, on September 9, 1993, FCA granted preliminary approval to the revised draft agreement subject to certain conditions, and on September 16, 1993, the Insurance Corporation expressed its support for FCA's action; and

Whereas, the Work Group proposed certain further revisions to the revised draft agreement to address the concerns reflected in FCA's conditions; and

Whereas, FCA has stated that it intends to publish the Agreement in the **Federal Register** and seek comments thereon; and

Whereas, the Parties are mindful of FCA's independent authority under Section 5.17(a)(10) of the Act to ensure the safety and soundness of Banks, FCA's independent authority under Sections 4.2 and 4.9 of the Act to approve the terms of specific issuances of Systemwide Debt Securities, the Insurance Corporation's independent authority under Section 5.61 of the Act to assist troubled Banks, and the Banks' independent obligations under Section 4.3(c) of the Act to maintain necessary collateral levels for Systemwide Debt Securities; and

Whereas, the Banks are entering into this Agreement pursuant to, *inter alia*, Section 4.2(d) of the Act; and

Whereas, the Funding Corporation believes the execution and implementation of this Agreement will materially accomplish the objectives which it has concluded are appropriate for a market access program under Section 4.9(b)(2) of the Act; and

Whereas, subject to the approval of FCA as described in Section 7.01(f) and the conditions set forth in Section 7.03(f), the Funding Corporation is prepared (i) to adopt as the "conditions of participation" that it understands to be required by Section 4.9(b)(2) of the Act each Bank's compliance with this Agreement, (ii) to become a party to this Agreement, and (iii) on the date this Agreement becomes effective, to discontinue the Market Access and Risk Alert Program as described in Section 7.03(f); and

Whereas, the Funding Corporation is entering into this Agreement pursuant to, *inter alia*, Section 4.9(b)(2) of the Act,

Now Therefore, in consideration of the foregoing, the mutual promises and agreements herein contained, and other good and valuable consideration, receipt of which is hereby acknowledged, the Parties, intending to be legally bound hereby, agree as follows:

Article I—Categories

Section 1.01. *Scorekeeper.* The Scorekeeper, for purposes of this Agreement, shall be the same as the Scorekeeper under Section 4.1 of CIPA, as amended from time to time, or any successor thereto.

Section 1.02. *CIPA Oversight Body.* The CIPA Oversight Body, for purposes of this Agreement, shall be the same as the Oversight Body under Section 6.1 of

CIPA, as amended from time to time, or any successor thereto.

Section 1.03. *CIPA Scores.* Net Composite Scores and Average Net Composite Scores, for purposes of this Agreement, shall be the same as those determined under Article II of CIPA, the Model referred to therein, and Section 1.2(f)(i) of CIPA, as in effect on January 1, 1994, and as amended under CIPA or replaced by successor provisions under CIPA in the future, to the extent such future amendments or replacements are by agreement of all the Banks.

Section 1.04. *Collateral and Permanent Capital Figures.* Each Bank shall report to the Scorekeeper within fifteen days after the end of each month its Collateral Figure as of the last day of that month. Each Bank shall report to the Scorekeeper within fifteen days after the end of each quarter its Permanent Capital Figure as of the last day of that quarter, except that any Bank that is in Category I, II or III, as indicated in the most recent notice from the Scorekeeper, shall report to the Scorekeeper within fifteen days after the end of each month its Permanent Capital Figure as of the last day of that month. Should any Bank later correct or revise, or be required to correct or revise, any past financial data in a way that would cause any Collateral or Permanent Capital Figure previously reported hereunder to have been different, the Bank shall promptly report a revised Figure to the Scorekeeper. Should the Scorekeeper consider it necessary to verify any Collateral or Permanent Capital Figure, it shall so report to the Committee, or, if the Committee is not in existence, to the CIPA Oversight Body, and the Committee or the CIPA Oversight Body, as the case may be, may verify the Figures as it deems appropriate, through reviews of Bank records by its designees (including experts or consultants retained by it) or otherwise. The reporting Bank shall cooperate in any such verification, and the other Banks shall provide such assistance in conducting any such verification as the Committee or the CIPA Oversight Body, as the case may be, may reasonably request.

Section 1.05. *Category I.* A Bank shall be in Category I if it: (a) Has an Average Net Composite Score of 35.0 or more, but less than 45.0, for the most recent calendar quarter for which an Average Net Composite Score is available, (b) has a Net Composite Score of 30.0 or more, but less than 40.0, for the most recent calendar quarter for which a Net Composite Score is available, (c) has both a Collateral Figure of 102.00 percent or more, but less than 103.00 percent, for the last day of the most recent month, and an Average Net Composite Score of less than 55.0 for the most recent calendar quarter for which an Average Net Composite Score is available, or (d) has a Permanent Capital Figure of 5.50 percent or more, but less than 8.00 percent, for the period ending on the last day of the most recent month. Clause (c) of the preceding sentence shall not apply if a Bank (i) has the unconditional legal right, not terminable without the Bank's consent, to require its constituent Associations to make additional investments in the Bank, and provides to the Scorekeeper an opinion of counsel confirming that it has such right, and (ii) the capital available to the Bank through this means would, if called upon, be sufficient to cause the Bank to have a Collateral Figure of 103.00 percent or more.

Section 1.06. *Category II.* A Bank shall be in Category II if it: (a) Has an Average Net Composite Score of 25.0 or more, but less than 35.0, for the most recent calendar quarter for which an Average Net Composite Score is available, (b) has a Net Composite Score of 20.0 or more, but less than 30.0, for the most recent calendar quarter for which a Net Composite Score is available, (c) would come within the provisions of Section 1.07(a) or (b) if the parenthetical phrases were omitted therefrom, (d) has a Collateral Figure of 101.00 percent, or more, but less than 102.00 percent, for the last day of the most recent month, (e) has a Permanent Capital Figure of 3.50 percent or more, but less than 5.50 percent, for the period ending on the last day of the most recent month, or (f) is in Category I and has failed to provide information to the Committee as required by Article III within two Business Days after written notice from the Committee of such failure.

Section 1.07. *Category III.* A Bank shall be in Category III if it: (a) Has an Average Net Composite Score (computed without making any Liquidity Deficiency Deduction) of less than 25.0 for the most recent calendar quarter for which an Average Net Composite Score is available, (b) has a Net Composite Score (computed without making any Liquidity Deficiency Deduction) of less than 20.0 for the most recent calendar quarter for which a Net Composite Score is available, (c) has an Excess Collateral Figure of less than 101.00 percent for the last day of the most recent month, (d) has a Permanent Capital Figure of less than 3.50 percent for the period ending on the last day of the most recent month, or (e) is in Category II and has failed to provide information to the Committee as required by Article III within two Business Days after written notice from the Committee of such failure.

Section 1.08. *Highest Category.* If a Bank would come within more than one Category by reason of the various provisions of Sections 1.05 through 1.07, it shall be considered to be in the highest-numbered Category for which it qualifies (*e.g.*, Category III rather than Category II).

Section 1.09. *Notice by Scorekeeper.* Within twenty days of the end of each month, after receiving the reports due under Section 1.04 within fifteen days of the end of the prior month, the Scorekeeper shall provide to all Banks, FCA, the Insurance Corporation, the Funding Corporation if it is not the Scorekeeper, and either the CIPA Oversight Body or, if it is in existence, the Committee a notice identifying the Banks, if any, that are in Categories I, II and III, or stating that no Banks are in such Categories.

Article II—The Committee

Section 2.01. *Formation.* A Monitoring and Advisory Committee, referred to herein as "the Committee," shall be formed at the instance of the CIPA Oversight Body within seven days of the date that it receives a notice from the Scorekeeper under Section 1.09 that any Bank is in Category I, II or III (unless such a Committee is already in existence). The Committee shall remain in existence thereafter for so long as the most recent notice from the Scorekeeper under Section 1.09 indicates that any Bank is in Category I, II or III. If not already in existence, the Committee may also be formed: (a) At the instance of the CIPA Oversight Body at any other time, in order to consider a Continued Access Request that has been submitted or is expected to be submitted, (b) for purposes of preparing the reports described in Section 7.05, and (c) as provided for in Section 8.04(b).

Section 2.02. *Composition.* The Committee shall be made up of two representatives of each Bank and two representatives of the Funding Corporation. One of the representatives of each Bank shall be that Bank's representative on the CIPA Oversight Body. The other representative of each Bank shall be an individual designated by the Bank's board of directors, who may be a member of the Bank's board of directors or a senior officer of the Bank, in the discretion of the board. One of the representatives of the Funding Corporation shall be an outside director of the Funding Corporation designated by the Funding Corporation board of directors. The other representative of

the Funding Corporation shall be designated by the board of directors of the Funding Corporation from among the members of its board and/or its senior officers. The removal and replacement of the Committee members designated directly by Bank boards of directors and by the Funding Corporation shall be in the sole discretion of each Bank board and of the Funding Corporation, respectively. A replacement for a member of the CIPA Oversight Body shall automatically replace such member on the Committee.

Section 2.03. *Authority and Responsibilities.* The Committee shall have the authority and responsibilities specified in Article II, in Sections 1.04, 3.01, 3.02, 3.05, 3.06, 4.02, 7.05, 8.04 and 8.08, and in Article VI, and such incidental powers as are necessary and appropriate to effectuating such authority and responsibilities.

Section 2.04. *Meetings.* The initial meeting of the Committee shall be held at the call of the Chairman of the CIPA Oversight Body or a majority of the Parties entitled to vote on Committee business (with each Party acting through at least one of its representatives). Thereafter, the Committee shall meet at the call of the Chairman of the Committee or a majority of the Parties entitled to vote on Committee business (with each Party acting through at least one of its representatives). Written notice of each meeting shall be given to each member by the Chairman or his or her designee not less than 48 hours prior to the time of the meeting. A meeting may be held without such notice upon the signing of a waiver of notice by all of the Parties entitled to vote on Committee business (with each Party acting through at least one of its representatives). A majority of the Parties entitled to vote on Committee business (with each Party acting through at least one of its representatives) shall constitute a quorum for the conduct of business, *provided, however,* that if a quorum cannot be raised after seven days of efforts, the Parties that attend a meeting upon proper notice thereafter shall constitute a quorum. A meeting may be held by a telephone conference arrangement allowing each speaker to be heard by all others in attendance.

Section 2.05. *Action Without a Meeting.* Action may be taken by the Committee without a meeting if each Bank and the Funding Corporation (with each Party acting through at least one of its representatives) consents in writing to consideration of a matter without a meeting and a majority of the Parties entitled to vote on Committee business (with each Party acting through at least one of its representatives) approves the action in writing, which writings shall be kept with the minutes of the Committee.

Section 2.06. *Voting.* Each Bank and the Funding Corporation shall have one vote on Committee business. Voting on Committee business (including recommendations on Continued Access Decisions, but not the ultimate vote on Continued Access Decisions, which is addressed in Article VI) shall be by a simple majority of the Parties entitled to vote on Committee business that are present (physically or by telephone) through at least one representative. If a Bank or the Funding Corporation has two representatives present, they shall agree in casting the vote of the Bank or the Funding Corporation, and if they cannot agree on a particular matter, that Bank or the Funding Corporation shall not cast a vote on that matter, and, in determining the necessary majority (but not in determining a quorum), shall not be counted as a Party entitled to vote on that matter.

Section 2.07. *Officers.* The Committee shall elect from among its members a Chairman, a Vice Chairman, a Secretary and such other officers as it shall from time to time deem appropriate. The Chairman shall chair the meetings of the Committee and have such other duties as the Committee may delegate to him or her. The Vice Chairman shall perform such duties of the Chairman as the Chairman is unable to perform, and shall have such other duties as the Committee may delegate to him or her. The Secretary shall keep the minutes and maintain the minute book of the Committee. Other officers shall have such duties as the Committee may delegate to them.

Section 2.08. *Retention of Staff, Consultants and Experts.* The Committee shall be authorized to retain staff, consultants and experts as it deems necessary and appropriate to carry out its functions.

Section 2.09. *Expenses.* Any compensation of each member of the Committee for time spent on Committee business and for his or her out-of-pocket expenses, such as travel, shall be paid by the Party that designated that member to the Committee or to the CIPA Oversight Body. All other expenses incurred by the Committee shall be borne by the Banks in such shares as the Committee shall from time to time determine.

Section 2.10. *Custody of Records.* All information received by the Committee pursuant to this Agreement, and all Committee minutes, shall be lodged, while not in active use by the Committee, at the Funding Corporation, and shall be deemed records of the Funding Corporation for purposes of FCA examination. The Parties agree that documents in active use by the Committee may also be examined by FCA.

Article III—Provision of Information

Section 3.01. *Information To Be Provided By All Banks in Categories I, II and III.* If a Bank is in Category I, II or III, as indicated in the most recent notice from the Scorekeeper under Section 1.09, and if the prior monthly notice by the Scorekeeper did not indicate that the Bank was in any Category, then the Bank shall within thirty days provide to the Committee: (a) a detailed explanation of the causes of its being in that Category, (b) an action plan to improve its financial situation so that it is no longer in any of the three Categories, (c) a timetable for achieving that result, and (d) such other pertinent materials and information as the Committee shall, within seven days of receiving notice from the Scorekeeper, request in writing from the Bank. Such Bank shall summarize, aggregate or analyze data, as well as provide raw data, in such manner as the Committee may request. Such information shall be promptly updated (without any need for a request by the Committee) whenever the facts significantly change, and shall also be updated or supplemented as the Committee so requests in writing of the Bank by such deadlines as the Committee may reasonably specify.

Section 3.02. *Additional Information To Be Provided By Banks in Categories II and III.* If a Bank is in Category II or III, as indicated in the most recent notice from the Scorekeeper under Section 1.09, and if the prior monthly notice by the Scorekeeper did not indicate that the Bank was in Category II or III, then the Bank shall within thirty days provide to the Committee, in addition to the information required by Section 3.01, the following information: (a) copies of its complete Business Plan, as revised to take account of the financial difficulties the Bank is facing, (b) a report as to the status of any Bank discussions with the Insurance Corporation concerning possible assistance to the Bank or other steps to improve the Bank's financial condition, and (c) a detailed list of all materials provided by the Bank to the Insurance Corporation. Such information shall be promptly updated (without any need for a request by the Committee) whenever the facts significantly change, and shall also be updated or supplemented as the Committee so requests in writing of the Bank by such deadlines as the Committee may reasonably specify. Such Bank shall also allow designees of

the Committee (including experts or consultants retained by the Committee) to conduct on-site inspections of credit and financial files, examination reports (if inspection of such reports is permitted by law), auditors' letters, and other Bank documents. The Committee may draw upon the resources of the other Banks in conducting such inspections.

Section 3.03. *Documents or Information Relating to Communications With FCA or the Insurance Corporation.* Notwithstanding Sections 3.01 and 3.02, a Bank shall not disclose to the Committee any communications between the Bank and FCA or the Insurance Corporation, or documents describing such communications, except as consented to by, and subject to such restrictive conditions as may be imposed by, whichever of FCA or the Insurance Corporation was involved in the communication. However, facts regarding the Bank's condition or plans that pre-existed a communication with FCA or the Insurance Corporation and then were included in such a communication are not barred from disclosure by this section. Nothing in this section shall preclude a Bank from making disclosures to the System Disclosure Agent necessary to allow the System Disclosure Agent to comply with its obligations under the securities laws or other applicable law or regulations with regard to disclosure to investors.

Section 3.04. *Sources of Information; Certification.* Information provided to the Committee under Sections 3.01 and 3.02 shall, to the extent applicable, be data used in the preparation of financial statements in accordance with generally accepted accounting principles, or data used in the preparation of call reports submitted to FCA pursuant to 12 CFR part 621, subpart B, as amended from time to time, or any successor thereto. A Bank shall certify, through its chief executive officer or, if there is no chief executive officer, a senior executive officer, the completeness and accuracy of all information provided to the Committee under Sections 3.01 and 3.02.

Section 3.05. *Failure to Provide Information.* If a Bank fails to provide information to the Committee as and when required under Sections 3.01 and 3.02, and does not correct such failure within two Business Days of written notice by the Committee of the failure, then the Committee shall so advise the Scorekeeper.

Section 3.06. *Provision of Information to Banks.* Any information provided to the Committee under Sections 3.01 and 3.02 shall be provided by the Committee to any Bank upon request. A Bank shall not have the right under this Agreement to obtain information directly from another Bank.

Section 3.07. *Cessation of Obligations.* A Bank's obligation to provide information to the Committee under Section 3.01 shall cease as soon as the Bank is no longer in Category I, II or III, as indicated in the most recent notice from the Scorekeeper under Section 1.09. A Bank's obligation to provide to the Committee information under Section 3.02 shall cease as soon as the Bank is no longer in Category II or III, as indicated in the most recent notice from the Scorekeeper under Section 1.09.

Article IV—Restrictions on Market Access

Section 4.01. *Final Restrictions.* As of the Effective Date, a Bank in Category II, as indicated in the most recent notice from the Scorekeeper under Section 1.09, (a) shall be permitted to participate in issues of Systemwide Debt Securities only to the extent necessary to roll over the principal (net of any original issue discount) of maturing debt, and (b) shall comply with the Additional Restrictions.

Section 4.02. *Category II Interim Restrictions.* From the day that a Bank receives a notice from the Scorekeeper that it is in Category II until (a) 10 days thereafter, if the Bank does not by that day submit a Continued Access Request to the Committee, or (b) if the Bank does by that day submit a Continued Access Request to the Committee, the seventh day following the day that notice is received that the Request is granted or denied, the Bank (i) may participate in issues of Systemwide Debt Securities only to the extent necessary to roll over the principal (net of any original issue discount) of maturing debt unless the Committee, taking into account the criteria in Section 6.03, shall specifically authorize participation to a greater extent, and (ii) shall comply with the Additional Restrictions. Notwithstanding the foregoing, the Category II Interim Restrictions shall not go into effect if a Continued Access Request has already been granted in anticipation of the formal notice that the Bank is in Category II.

Section *4.03. FCA Action.* The Final Restrictions and the Category II Interim Restrictions shall go into effect without the need for case-by-case approval by FCA.

Section 4.04. *Cessation of Restrictions.* The Final Restrictions and the Category II Interim Restrictions shall cease as soon as the Bank is no longer in Category II, as indicated in the most recent notice from the Scorekeeper under Section 1.09. The Bank shall continue, however, to be subject to such other obligations under this Agreement as may apply to it by reason of its being in another Category.

Article V—Prohibition of Market Access

Section 5.01. *Final Prohibition.* As of the Effective Date, a Bank in Category III, as indicated in the most recent notice from the Scorekeeper under Section 1.09, (a) shall be prohibited from participating in issues of Systemwide Debt Securities, and (b) shall comply with the Additional Restrictions.

Section 5.02. *Category III Interim Restrictions.* From the day that a Bank receives a notice from the Scorekeeper that it is in Category III until (a) 25 days thereafter, if the Bank does not by that day submit a Continued Access Request to the Committee, or (b) if the Bank does by that day submit a Continued Access Request to the Committee, the seventh day following the day that notice is received that the Request is granted or denied, the Bank (i) may participate in issues of Systemwide Debt Securities only to the extent necessary to roll over the principal (net of any original issue discount) of maturing debt, and (ii) shall comply with the Additional Restrictions. Notwithstanding the foregoing, the Category III Interim Restrictions shall not go into effect if a Continued Access Request has already been granted in anticipation of the formal notice that the Bank is in Category III.

Section 5.03. *FCA Action.* The Category III Interim Restrictions shall go into effect without the need for case-by-case approval by FCA. The Parties agree that the Final Prohibition shall go into effect without the need for approval by FCA; *provided, however,* that FCA may override the Final Prohibition, for such time period up to 60 days as FCA may specify (or, if FCA does not so specify, for 60 days), by so ordering before the Effective Date, and may renew such an override once only, for such time period up to 60 additional days as FCA may specify (or, if FCA does not so specify, for 60 days), by so ordering before the expiration of the initial override period. If the Final Prohibition is overridden by FCA, the Category III Interim Restrictions shall remain in effect.

Section 5.04. *Cessation of Restrictions.* The Final Prohibition and the Category III Interim Restrictions shall cease as soon as the Bank is no longer in Category III, as indicated in the most recent notice from the

Scorekeeper under Section 1.09. The Bank shall continue, however, to be subject to such other obligations under this Agreement as may apply to it by reason of its being in another Category.

Article VI—Continued Access Decisions

Section 6.01. *Process.* The process for action on Continued Access Requests shall be as follows:

(a) *Submission of Request.* A Bank may submit a Continued Access Request for consideration by the Committee at any time, including (i) prior to formal notice from the Scorekeeper that it is in Category II or III, if the Bank anticipates such notice, and (ii) subsequent to the Effective Date of Final Restrictions or a Final Prohibition.

(b) *Committee Recommendation.* After a review of the Request, the supporting information and any other pertinent information available to the Committee, the Committee shall arrive at a recommendation regarding the Request (including, if the recommendation is to grant the Request, recommendations as to the expiration date of the Continued Access Decision and as to any conditions to be imposed on the Decision). The Funding Corporation, drawing upon its expertise and specialized knowledge, shall provide to the Committee all pertinent information in its possession (and the Banks authorize the Funding Corporation to provide such information to the Committee for its use as provided herein, and, to that limited extent only, waive their right to require the Funding Corporation to maintain the confidentiality of such information). The Committee shall send its recommendation and a statement of the reasons therefor, including a description of any considerations that were expressed for and against the recommendation by members of the Committee during its deliberations, together with the Request, the supporting information, a report of how the members of the Committee voted on the recommendation, a report by the Funding Corporation concerning its position on the recommendation, and any other material information that was considered by the Committee, to all Banks and the Funding Corporation by overnight delivery service within fourteen days after receiving the Request. If the Committee fails to act within such fourteen-day period, the Continued Access Request shall be deemed forwarded to all Banks entitled to vote thereon for their consideration. If the Committee has failed to act, the Funding Corporation shall send to all Banks, within two days following the deadline for Committee action, a report concerning the position of the Funding Corporation on the Continued Access Request.

(c) *Vote on the Request.* The Banks entitled to vote on the Request shall be all Banks other than those in Category II and III, as indicated in the most recent notice from the Scorekeeper under Section 1.09, and other than the Bank requesting the Continued Access Decision. Within ten days of receiving the Committee's recommendation and the accompanying materials (or, if the Committee failed to act within fourteen days, within ten days following the fourteenth day), the board of directors of each Bank entitled to vote on the Request, or its designee, after review of the recommendation, the accompanying materials, the report of the Funding Corporation, and any other pertinent information, shall vote to grant or deny the Request (as modified or supplemented by any recommendations of the Committee as to the expiration date of the Continued Access Decision and as to conditions to be imposed on the Decision), and shall provide written notice of its vote to the Committee. If the Committee has recommended in favor of a Continued Access Decision, the vote of a Bank shall be either to accept or reject the Committee's recommendation, including the recommended expiration date and conditions; if the Committee has recommended against a Continued Access Decision or has failed to act, the vote of a Bank shall be either to grant the Continued Access Request on the terms requested by the requesting Bank, or to deny it. Failure to vote within the ten-day period shall be considered a "no" vote. A Continued Access Request shall be granted only upon a 75 percent Vote within the ten-day period, and shall be considered denied if a 75 percent Vote is not forthcoming by that day.

(d) *Notice.* The Committee shall promptly provide written notice to the Parties, FCA and the Insurance Corporation of the granting or denial of the Request, and, if the Request was granted, of all the particulars of the Continued Access Decision.

Section 6.02. *Provision of Information to FCA and the Insurance Corporation.* FCA and the Insurance Corporation shall be advised by the Committee of the submission of a Continued Access Request, shall be provided by the Committee with appropriate materials relating to the Request, and shall be advised by the Committee of the recommendation made by the Committee concerning the Request.

Section 6.03. *Criteria.* The Committee, in arriving at its recommendation on a Continued Access Request, and the voting Banks, in voting on a Continued Access Request, shall consider (a) the present financial strength of the Bank in issue, (b) the prospects for financial recovery of the Bank in issue, (c) the probable costs of particular courses of action to the Banks and the Insurance Fund, (d) any intentions expressed by the Insurance Corporation with regard to assisting or working with the Bank in issue, (e) any existing lending commitments and any particular high-quality new lending opportunities of the Bank, (f) seasonal variations in the borrowing needs of the Bank, (g) whether the Bank's independent public accountants have included a Going Concern Qualification in the most recent combined financial statements of the Bank and its constituent Associations, and (h) any other matters deemed pertinent.

Section 6.04. *Expiration Date.* A Continued Access Decision shall have such expiration date as the Committee recommends and is approved by a 75 percent Vote. If the Committee recommends against or fails to act on a Continued Access Request, and it is subsequently approved by a 75 percent Vote, the expiration date of the Continued Access Decision shall be the earlier of the date requested by the Bank or 180 days from the date the Request is granted. A Continued Access Decision may be terminated prior to that date, or renewed for an additional term, upon a new recommendation by the Committee and 75 percent Vote. A Continued Access Decision (including any conditions to which it may be subject) will terminate automatically as soon as the Bank is no longer in the same Category as it was when it requested the Decision, as indicated in the most recent notice from the Scorekeeper under Section 1.09.

Section 6.05. *Conditions.* A Continued Access Decision shall be subject to such conditions as the Committee recommends and are approved by a 75 percent Vote. If specifically approved by a 75 percent Vote, administration of the details of the conditions and ongoing refinement of the conditions to take account of changing circumstances can be left to the Committee or such subcommittee as it may establish for that purpose. Among the conditions that may be imposed on a Continued Access Decision are (a) a requirement of remedial action by the Bank, failing which the Continued Access Decision will terminate, (b) a requirement of other appropriate conduct on the part of the Bank (such as compliance with the Additional Restrictions), failing which the Continued Access Decision will

terminata, and (c) specific restrictions on continued borrowing by the Bank, such as a provision allowing a Bank in Category II to borrow only for specified types of business in addition to rolling over the principal of maturing debt, or allowing such a Bank only to roll over interest on maturing debt in addition to rolling over the principal of maturing debt, or a provision allowing a Bank in Category III to roll over a portion of its maturing debt. The Committee shall be responsible for monitoring and determining compliance with conditions, and shall promptly advise the Parties of any failure by a Bank to comply with conditions. The Committee's determination with respect to compliance with conditions shall be final, until and unless overturned or modified in arbitration pursuant to Section 7.08.

Section 6.06. *FCA Action.* The Parties agree that a Continued Access Decision shall go into effect without the need for approval by FCA, but that FCA may override the Continued Access Decision, for such time period as FCA may specify (or, if FCA does not so specify, until a new Continued Access Decision is made pursuant to a recommendation of the Committee and a 75 percent Vote, in which case it is again subject to override by FCA), by so ordering at any time.

Section 6.07. *Notice to FCA of Intent to File Continued Access Request.* A Bank that receives notice that it is in Category III shall advise FCA, within ten days of receiving such notice, whether it intends to file a Continued Access Request.

Article VII—Other

Section 7.01. *Conditions Precedent.* This Agreement shall go into effect upon the execution by each Party of a certificate in substantially the form of Attachment A hereto that all of the following conditions precedent have been satisfied: (a) the delivery to the Banks of an opinion of Covington & Burling in substantially the form of Attachment B hereto [re authority, enforceability, compliance with Section 4.9(b)(2) by the Funding Corporation], (b) the delivery to the Funding Corporation of an opinion of Sutherland, Asbill & Brennan in substantially the form of Attachment C hereto [re same], (c) adoption by each of the Banks of a resolution in substantially the form of Attachment D hereto; (d) adoption by the Funding Corporation of a resolution substantially in the form of Attachment E hereto, (e) action by the Insurance Corporation, through its board, expressing its support for this Agreement, and (f) action by FCA, through its board, approving this Agreement pursuant to Section 4.2(d) of the Act, and (without necessarily expressing any view as to the proper interpretation of Section 4.9(b)(2) of the Act) approving this Agreement pursuant to Section 4.9(b)(2) of the Act insofar as such approval may be required, which action shall (i) be taken after interested parties have been given notice and afforded the opportunity to comment to FCA on whether this Agreement should be approved, (ii) indicate that the entry into and compliance with this Agreement by the Funding Corporation fully satisfy such obligations as the Funding Corporation may have with respect to establishing "conditions of participation" for market access under Section 4.9(b)(2), and (iii) contain no reservations or other conditions or qualifications except for those which may be specifically agreed to by the Funding Corporation's board of directors and the other Parties. Upon execution of its certificate, each Party shall forward a copy to the Farm Credit Bank of Springfield, attn. Allan Kantrowitz, General Counsel, which shall advise all other Parties when a complete set of certificates is received.

Section 7.02. *Representations and Warranties.* Each Party represents and warrants to the other Parties that (a) it has duly executed and delivered this Agreement, (b) its performance of this Agreement in accordance with its terms will not conflict with or result in the breach of or violation of any of the terms or conditions of, or constitute (or with notice or lapse of time or both constitute) a default under any order, judgment or decree applicable to it, or any instrument, contract or other agreement to which it is a party or by which it is bound, (c) it is duly constituted and validly existing under the laws of the United States, (d) it has the corporate and other authority, and has obtained all necessary approvals, to enter into this Agreement and perform all of its obligations hereunder, and (e) its performance of this Agreement in accordance with its terms will not conflict with or result in the breach of or violation of any of the terms or conditions of, or constitute (or with notice or lapse of time or both constitute) a default under its charter (with respect to the Party Banks), or its bylaws.

Section 7.03. *Additional Covenants.*

(a) Each Bank agrees to notify the other Parties and the Scorekeeper if, at any time, it anticipates that within the following three months it will come to be in Category I, II or III, or will move from one Category to another.

(b) Whenever a Bank is subject to Final Restrictions, a Final Prohibition, Category II Interim Restrictions, Category III Interim Restrictions, or a Continued Access Decision, the Committee shall promptly so notify the Funding Corporation, and the Funding Corporation shall take all necessary steps to ensure that the Bank participates in issues of Systemwide Debt Securities only to the extent permitted thereunder. The Funding Corporation may rely on the determination of the Committee as to whether a Bank has complied with a condition to a Continued Access Decision.

(c) Each Bank agrees that it will not at any time that it is in Category I, II or III, as indicated in the most recent notice from the Scorekeeper under Section 1.09, and will not without twelve months' prior notice to all other Banks and the Funding Corporation at any other time, either (i) withdraw, or (ii) modify, in a fashion that would impede the issuance of Systemwide Debt Securities, the funding resolution it has adopted pursuant to Section 4.4(b) of the Act. Should a violation of this covenant be asserted, and should the Bank deny same, the funding resolution shall be deemed still to be in full effect, without modification, until arbitration of the matter is completed, and each Bank, by entering into this Agreement, consents to emergency injunctive relief to enforce this provision. Nothing in this Agreement shall be construed to restrict any Party's ability to take the position that a Bank's withdrawal or modification of its funding resolution is not authorized by law.

(d) Each Bank agrees that it will not at any time that it is in Category I, II or III, as indicated in the most recent notice from the Scorekeeper under Section 1.09, and will not without twelve months' prior notice to all other Banks and the System Disclosure Agent at any other time, fail to report information to the System Disclosure Agent pursuant to the Disclosure Program for the issuance of Systemwide Debt Securities and for the System Disclosure Agent to have a reasonable basis for making disclosures pursuant to the Disclosure Program. Should the System Disclosure Agent assert a violation of this covenant, and should the Bank deny same, the Bank shall furnish such information as the System Disclosure Agent shall request until arbitration of the matter is completed, and each Bank, by entering into this Agreement, consents to emergency injunctive relief to enforce this provision. Nothing in this Agreement shall be construed to restrict the ability of the System Disclosure Agent to comply with its obligations under the

securities laws or other applicable law or regulations with regard to disclosure to investors.

(e) Without implying that suit may be brought on any other matter, each Bank and the Funding Corporation specifically agree not to bring suit to challenge this Agreement or to challenge any Final Prohibition, Final Restrictions, Category II Interim Restrictions, Category III Interim Restrictions, Continued Access Decision, denial of a Continued Access Request or recommendation of the Committee with respect to a Continued Access Request arrived at in accordance with this Agreement. This provision shall not be construed to preclude judicial actions under the U.S. Arbitration Act, 9 U.S.C. 1–15, to enforce or vacate arbitration decisions rendered pursuant to Section 7.08, or for an order that arbitration proceed pursuant to Section 7.08.

(f) The Funding Corporation agrees that, promptly following the date this Agreement becomes effective, it will discontinue the Market Access and Risk Alert Program, and that it will thereafter adopt no similar such program for so long as (i) this Agreement is in effect, and (ii) Section 4.9(b)(2) of the Act is not amended in a manner which would require, nor is there any other change in applicable law or regulations which would require, the Funding Corporation to establish "conditions of participation" different from those contained in this Agreement. Should the condition described in clause (ii) no longer apply and the Funding Corporation adopt a market access program, this Agreement shall be deemed terminated. All Banks reserve the right to argue, if the conditions described in clauses (i) or (ii) of the preceding sentence should no longer apply and the Funding Corporation should adopt such a program, that any such program adopted by the Funding Corporation is contrary to law, either because Section 4.9(b)(2) of the Act does not authorize such a program, or for any other reason, and the entry by any Bank into this Agreement shall not be construed as waiving such right.

(g) It is expressly agreed that this Agreement and FCA approval hereof do not provide any grounds for challenging FCA or Insurance Corporation actions with respect to the creation of or the conduct of receiverships or conservatorships. Without limiting the preceding statement, each Bank specifically and expressly agrees and acknowledges that it cannot, and agrees that it shall not, attempt to challenge FCA's appointment of a receiver or conservator for itself or any other System institution or FCA's or the Insurance Corporation's actions in the conduct of any receivership or conservatorship (i) on the basis of this Agreement or FCA's approval of this Agreement; or (ii) on the grounds that Category II Interim Restrictions, Final Restrictions, Category III Interim Restrictions, or Final Prohibitions were or were not imposed, whether by reason of FCA's or the Insurance Corporation's action or inaction or otherwise. The Banks jointly and severally agree that they shall indemnify and hold harmless FCA and the Insurance Corporation against all costs, expenses, and damages, including without limitation, attorneys' fees and litigation costs, resulting from any such challenge by any Party.

Section 7.04. *Termination.* This Agreement shall terminate on December 31, 2011, or at an earlier date if so agreed in writing by 75 percent of all the Banks. Commencing a year before December 31, 2011, the Parties shall meet to consider its extension. It is understood that the termination of this Agreement shall not affect any rights and obligations of the Funding Corporation under Section 4.9(b)(2) of the Act.

Section 7.05. *Periodic Review.* During the years 2000 and 2006, and at such more frequent intervals as the Parties may agree, the Banks and the Funding Corporation, through their boards of directors, shall review this Agreement and consider whether any amendments to it are appropriate. In connection with such review, the Committee shall report to the boards on the operation of the Agreement and recommend any amendments it considers appropriate.

Section 7.06. *Confidentiality.* The Parties may disclose this Agreement and any amendments to it and any actions taken pursuant to this Agreement to restrict or prohibit borrowing by a Bank. All other information relating to this Agreement shall be kept confidential and shall be used solely for purposes of this Agreement, except that, to the extent permitted by applicable law and regulations, such information may be disclosed by (a) the System Disclosure Agent under the Disclosure Program, (b) a Bank, upon coordination of such disclosure with the System Disclosure Agent, as the Bank deems appropriate for purposes of the Bank's disclosures to borrowers or shareholders; (c) a Bank as deemed appropriate for purposes of disclosure to transacting parties (subject, to the extent the Bank reasonably can obtain such agreement, to such a transacting party's agreeing to keep the information confidential) of material information relating to that Bank, or (d) any Party in order to comply with legal or regulatory obligations. Notwithstanding the preceding sentence, the Parties shall make every effort, to the extent consistent with legal requirements, securities disclosure obligations and other business necessities, to preserve the confidentiality of information provided to the Committee by a Bank and designated as "Proprietary and Confidential." Any expert or consultant retained in connection with this Agreement shall execute a written undertaking to preserve the confidentiality of any information received in connection with this Agreement. Notwithstanding the foregoing, nothing in this Agreement shall prevent Parties from disclosing information to FCA or the Insurance Corporation.

Section 7.07. *Amendments.* This Agreement may be amended only by the written agreement of all the Parties.

Section 7.08. *Dispute Resolution.* All disputes between or among Parties relating to this Agreement shall be submitted to final and binding arbitration pursuant to the U.S. Arbitration Act, 9 U.S.C. 1–15, *provided, however,* that any recommendation by the Committee regarding a Continued Access Request (including, if the recommendation is to grant the Request, recommendations as to the expiration date of the Continued Access Decision and as to any conditions to be imposed on the Decision), and any vote by a Bank on a Continued Access Request, shall be final and not subject to arbitration. Arbitrations shall be conducted under the Commercial Arbitration Rules of the American Arbitration Association before a single arbitrator. An arbitrator shall be selected within fourteen days of the initiation of arbitration by any Party, and the arbitrator shall render a decision within thirty days of his or her selection.

Section 7.09. *Governing Law.* This Agreement shall be governed by and construed in accordance with the Federal law of the United States of America to the extent applicable, and, to the extent that Federal law is not applicable, in accordance with the law of the State of New York.

Section 7.10. *Notices.* Notices under this Agreement shall be in writing, shall be sent both by facsimile transmission and by overnight delivery service, and shall be deemed received on the Business Day after they are sent. Notices shall be addressed as follows unless

such address is changed by written notice hereunder:

To AgriBank, FCB:
AgriBank, FCB, 375 Jackson Street, St. Paul, MN 55101.
ATTENTION: _____
Telecopier: 612–282–8666

To the Farm Credit Bank of Baltimore:
Farm Credit Bank of Baltimore, Farm Credit Building, 14114 York Road, Sparks, MD 21152.
ATTENTION: _____
Telecopier: 410–329–5705

To the Farm Credit Bank of Columbia:
Farm Credit Bank of Columbia, Farm Credit Bank Building, 1401 Hampton Street, Columbia, SC 29201.
ATTENTION: _____
Telecopier: 803–254–1776

To the Farm Credit Bank of Omaha:
Farm Credit Bank of Omaha, Farm Credit Building, 206 South 19th Street, Omaha, NB 68102–1755.
ATTENTION: _____
Telecopier: 402–348–3699

To the Farm Credit Bank of Spokane:
Farm Credit Bank of Spokane, W. 601 First Avenue, Spokane, WA 99204.
ATTENTION: _____
Telecopier: 509–838–9445

To the Farm Credit Bank of Springfield:
Farm Credit Bank of Springfield, 67 Hunt Street, Agawam, MA 01001.
ATTENTION: _____
Telecopier: 413–789–0140

To the Farm Credit Bank of Texas:
Farm Credit Bank of Texas, La Costa Office Park, 6210 Highway 290 East, Austin, TX 78723.
ATTENTION: _____
Telecopier: 512–465–0675

To the Farm Credit Bank of Wichita:
Farm Credit Bank of Wichita, 245 North Waco, Wichita, KS 67202.
ATTENTION: _____
Telecopier: 316–266–5121

To National Bank for Cooperatives:
National Bank for Cooperatives, 5500 South Quebec Street, Englewood, CO 80111.
ATTENTION: _____
Telecopier: 303–740–4002

To St. Paul Bank for Cooperatives:
St. Paul Bank for Cooperatives, 375 Jackson Street, St. Paul, MN 55101.
ATTENTION: _____
Telecopier: 612–282–8201

To Springfield Bank for Cooperatives:
Springfield Bank for Cooperatives, 67 Hunt Street, Agawam, MA 01001.
ATTENTION: _____
Telecopier: 413–789–0140

To Western Farm Credit Bank:
Western Farm Credit Bank, 3636 American River Drive, Sacramento, CA 95864–5996.
ATTENTION: _____
Telecopier: 916–971–2837

To Federal Farm Credit Banks Funding Corporation:
Federal Farm Credit Banks Funding Corporation, Suite 1401, 10 Exchange Place, Jersey City, NJ 07302.
ATTENTION: _____
Telecopier: 201–200–8109

To the Farm Credit System Insurance Corporation:
Farm Credit System Insurance Corporation, 1501 Farm Credit Drive, McLean, Virginia 22102–0826.
ATTENTION: _____
Telecopier: 703–734–5784

To the Farm Credit Administration:
Farm Credit Administration, 1501 Farm Credit Drive, McLean, Virginia 22102–5090.
ATTENTION: _____
Telecopier: 703–734–5784

To the CIPA Oversight Body:
At such address and telecopier number as shall be supplied to the Parties from time to time by the Chairman of the CIPA Oversight Body.

To the Committee:
At such address and telecopier number as shall be supplied by the Committee, which the Committee shall promptly transmit to each Party.

To a Scorekeeper other than the Funding Corporation:
At such address and telecopier number as shall be supplied by such Scorekeeper, which such Scorekeeper shall promptly transmit to each Party.

Section 7.11. *Headings; Conjunctive/Disjunctive; Singular/Plural.* The headings of any article or section of this Agreement are for convenience only and shall not be used to interpret any provision of the Agreement. Uses of the conjunctive include the disjunctive, and vice versa, unless the context clearly requires otherwise. Uses of the singular include the plural, and vice versa, unless the context clearly requires otherwise.

Section 7.12. *Successors and Assigns.* Except as provided in the definitions of "Bank" and "Banks" in Article IX, this Agreement shall inure to the benefit of and be binding upon the successors and assigns of the Parties, including entities resulting from the merger or consolidation of one or more Banks.

Section 7.13. *Counterparts.* This Agreement, and any document provided for hereunder, may be executed in one or more counterparts.

Section 7.14. *Waiver.* Any provision of this Agreement may be waived, but only if such waiver is in writing and is signed by all Parties to this Agreement.

Section 7.15. *Entire Agreement.* Except as provisions of CIPA are cited in this Agreement (which provisions are expressly incorporated herein by reference), this Agreement sets forth the entire agreement of the Parties and supersedes all prior understandings or agreements, oral or written, among the Parties with respect to the subject matter hereof.

Section 7.16. *Relation to CIPA.* This Agreement and CIPA are separate agreements, and invalidation of one does not affect the other. Should CIPA be invalidated or terminated, the Parties will take the necessary steps to maintain those aspects of CIPA that are referred to in Sections 1.01, 1.02 and 1.03, and to replace the CIPA Oversight Body for purposes of continued administration of this Agreement.

Section 7.17. *Third Parties.* Except as provided in Sections 2.10, 3.03, 7.03(g), 7.21 and 7.22, this Agreement is for the benefit of the Parties and their respective successors and assigns, and no rights are intended to be, or are, created hereunder for the benefit of any third party.

Section 7.18. *Time Is Of The Essence.* Time is of the essence in interpreting and performing this Agreement.

Section 7.19. *Statutory Collateral Requirement.* Nothing in this Agreement shall be construed to permit a Bank to participate in issues of Systemwide Debt Securities or other obligations if it does not satisfy the collateral requirements of Section 4.3(c) of the Act. For purposes of this Section, "Bank" shall include any System bank in conservatorship or receivership.

Section 7.20. *Termination of System Status.* Nothing in this Agreement shall be construed to preclude a Bank from terminating its status as a System institution pursuant to Section 7.10 of the Act, or from at that time withdrawing, as from that time forward, the funding resolution it has adopted pursuant to Section 4.4(b) of the Act. A Bank that terminates its System status shall cease to have any rights or obligations under this Agreement, except that it shall continue to be subject to Article VIII with respect to claims accruing through the date of such termination of System status.

Section 7.21. *Restrictions Concerning Subsequent Litigation.* It is expressly agreed by the Banks that (a) characterization or categorization of Banks, (b) information furnished to the Committee or other Banks, and (c) discussions or decisions of the Banks or Committee under this Agreement shall not be used in any subsequent litigation challenging FCA's or the Insurance Corporation's action or inaction.

Section 7.22. *Effect of this Agreement.* Neither this Agreement nor FCA approval hereof shall in any way restrict or qualify the authority of FCA or the Insurance Corporation to exercise any of the powers, rights, or duties granted by law to FCA or the Insurance Corporation.

Article VIII—Indemnification

Section 8.01. *Definitions.* As used in this Article VIII:

(a) *Indemnified Party* means any Bank, the Funding Corporation, the Committee, the Scorekeeper, or any of the past, present or future directors, officers, stockholders, employees or agents of the foregoing.

(b) *Damages* means any and all losses, costs, liabilities, damages and expenses, including, without limitation, court costs and reasonable fees and expenses of attorneys expended in investigation, settlement and defense (at the trial and appellate levels and otherwise), which are incurred by an Indemnified Party as a result of or in connection with a claim alleging liability to any non-Party for actions taken pursuant to or in connection with this Agreement. Except to the extent otherwise provided in this Article VIII, Damages shall be deemed to have been incurred by reason of a final settlement or the dismissal with prejudice of any such claim, or the issuance of a final nonappealable order by a court of competent jurisdiction which ultimately disposes of such a claim, whether favorably or unfavorably.

Section 8.02. *Indemnity.* To the extent consistent with governing law, the Banks, jointly and severally, shall indemnify and hold harmless each Indemnified Party against and in respect of Damages, *provided, however,* that an Indemnified Party shall not be entitled to indemnification under this Article VIII in connection with conduct of such Indemnified Party constituting gross negligence, willful misconduct, intentional tort or criminal act, or in connection with civil money penalties imposed by FCA. In addition, the Banks, jointly and severally, shall indemnify an Indemnified Party for all costs and expenses (including, without limitation, fees and expenses of attorneys) incurred reasonably and in good faith by an Indemnified Party in connection with the successful enforcement of rights under any provision of this Article VIII.

Section 8.03. *Advancement of Expenses.* The Banks, jointly and severally, shall advance to an Indemnified Party, as and when incurred by the Indemnified Party, all reasonable expenses, court costs and attorneys' fees incurred by such Indemnified Party in defending any proceeding involving a claim against such Indemnified Party based upon or alleging any matter that constitutes, or if sustained would constitute, a matter in respect of which indemnification is provided for in Section 8.02, so long as the Indemnified Party provides the Banks with a written undertaking to repay all amounts so advanced if it is ultimately determined by a court in a final nonappealable order or by agreement of the Banks and the Indemnified Party that the Indemnified Party is not entitled to be indemnified under Section 8.02.

Section 8.04. *Assertion of Claim.*

(a) Promptly after the receipt by an Indemnified Party of notice of the assertion of any claim or the commencement of any action against him, her or it in respect of which indemnity may be sought against the Banks hereunder (an "Assertion"), such Indemnified Party shall apprise the Banks, through a notice to each of them, of such Assertion. The failure so to notify the Banks shall not relieve the Banks of liability they may have to such Indemnified Party hereunder, except to the extent that failure to give such notice results in material prejudice to the Banks.

(b) Any Bank receiving a notice under paragraph (a) shall forward it to the Committee (which, if not in existence, shall be formed at the instance of such Bank to consider the matter). The Banks, through the Committee, shall be entitled to participate in, and to the extent the Banks, through the Committee, elect in writing on thirty days' notice, to assume, the defense of an Assertion, at their own expense, with counsel chosen by them and satisfactory to the Indemnified Party. Notwithstanding that the Banks, through the Committee, shall have elected by such written notice to assume the defense of any Assertion, such Indemnified Party shall have the right to participate in the investigation and defense thereof, with separate counsel chosen by such Indemnified Party, but in such event the fees and expenses of such separate counsel shall be paid by such Indemnified Party and shall not be subject to indemnification by the Banks unless (i) the Banks, through the Committee, shall have agreed to pay such fees and expenses, (ii) the Banks shall have failed to assume the defense of such Assertion and to employ counsel satisfactory to such Indemnified Party, or (iii) in the reasonable judgment of such Indemnified Party, based upon advice of his, her or its counsel, a conflict of interest may exist between the Banks and such Indemnified Party with respect to such Assertion, in which case, if such Indemnified Party notifies the Banks, through the Committee, that such Indemnified Party elects to employ separate counsel at the Banks' expense, the Banks shall not have the right to assume the defense of such Assertion on behalf of such Indemnified Party. Notwithstanding anything to the contrary in this Article VIII, neither the Banks, through the Committee, nor the Indemnified Party shall settle or compromise any action or consent to the entering of any judgment (x) without the prior written consent of the other, which consent shall not be unreasonably withheld, and (y) without obtaining, as an unconditional term of such settlement, compromise or consent, the delivery by the claimant or plaintiff to such Indemnified Party of a duly executed written release of such Indemnified Party from all liability in respect of such Assertion, which release shall be satisfactory in form and substance to counsel to such Indemnified Party. The Funding Corporation shall not be entitled to vote on actions by the Committee under this paragraph (b) or Section 8.08.

Section 8.05. *Remedies; Survival.* The indemnification, rights and remedies provided to an Indemnified Party under this Article VIII shall be (i) in addition to and not in substitution for any other rights and remedies to which any of the Indemnified Parties may be entitled, under any other agreement with any other Person, or otherwise at law or in equity, and (ii) provided prior to and without regard to any other indemnification available to any Indemnified Party. This Article VIII shall survive the termination of this Agreement.

Section 8.06. *No Rights in Third Parties.* This Agreement shall not confer upon any Person other than the Indemnified Party any rights or remedies of any nature or kind whatsoever under or by reason of the indemnification provided for in this Article VIII.

Section 8.07. *Subrogation; Insurance.* Upon the payment by the Banks to an Indemnified Party of any amounts for which an Indemnified Party shall be entitled to indemnification under this Article VIII, if the Indemnified Party shall also have the right to recover such amount under any commercial insurance, the Banks shall be subrogated to such rights to the extent of the indemnification actually paid. Where coverage under such commercial insurance may exist, the Indemnified Party shall promptly file and diligently pursue a claim under said insurance. Any amounts paid pursuant to such claim shall be refunded to the Banks to the extent the Banks have provided indemnification payments under this Article VIII, *provided, however,* that recovery under such insurance shall not be deemed a condition precedent to the indemnification obligations of the Banks under this Article VIII.

Section 8.08. *Sharing in Costs.* The Banks shall share in the costs of any indemnification payment hereunder as the Committee shall determine.

Article IX—Definitions

The following definitions are used in this Agreement:

Act means the Farm Credit Act of 1971, 12 U.S.C. 2001, *et seq.*, as amended from time to time, or any successors thereto.

The *Additional Restrictions* are that a Bank (a) shall manage its asset/liability mix so as not to increase, and, to the extent possible, so as to reduce or eliminate, any Interest-Rate Sensitivity Deduction in its Net Composite Score, and (b) shall not increase the dollar amount of any liabilities, or take any action giving rise to a lien or pledge on its assets, senior to its liability on Systemwide Debt Securities other than (i) tax liabilities and secured liabilities arising in the ordinary course of business through activities other than borrowing, such as mechanic's liens or judgment liens, and (ii) secured liabilities, or an action giving rise to such a lien or pledge, incurred in the ordinary course of business as the result of issuing secured debt or entering into repurchase agreements, *provided, however,* that such debt issuances and agreements may be undertaken to the extent that the proceeds therefrom are used to repay the principal of outstanding Systemwide Debt Securities and the value of the collateral securing the debt issuances or the agreements (computed in the same manner as provided under Section 4.3(c) of the Act) does not exceed the amount of principal so repaid.

Associations means agricultural credit associations, federal land bank associations, federal land credit associations and production credit associations.

Average Net Composite Score is defined in Section 1.03.

Bank means a bank of the Farm Credit System, other than (except where noted) any bank in conservatorship or receivership.

Banks means the banks of the Farm Credit System, other than (except where noted) any banks in conservatorship or receivership.

Business Day means any day other than a Saturday, Sunday or Federal holiday.

Business Plan means the business plan required under 12 CFR 618.8440, as amended from time to time, or any successors thereto.

CIPA means that certain "Contractual Interbank Performance Agreement Among the Banks of the Farm Credit System, the Farm Credit System Financial Assistance Corporation and the Federal Farm Credit Banks Funding Corporation, the Scorekeeper, Dated as of January 1, 1992," as amended from time to time.

CIPA Oversight Body is defined in Section 1.02.

Category I is defined in Section 1.05.

Category II is defined in Section 1.06.

Category II Interim Restrictions means the requirements set forth in Section 4.02.

Category III is defined in Section 1.07.

Category III Interim Restrictions means the requirements set forth in Section 5.02.

Collateral is defined as in Section 4.3(c) of the Act and the regulations thereunder, as amended from time to time, or any successors thereto.

Collateral Figure means a Bank's Collateral, divided by its Collateralized Obligations, times 100 percent.

Collateralized Obligations means obligations required by Section 4.3(c) of the Act to be backed by collateral as set forth therein.

The *Committee* is defined in Section 2.01.

Continued Access Decision means a decision, subject to the procedures, terms and conditions described in Article VI, that Final Restrictions or a Final Prohibition not go into effect, or be lifted.

Continued Access Request means a request for a Continued Access Decision.

Days means calendar days, unless the term Business Days is used.

Disclosure Program means the program established, pursuant to resolutions of the Banks and the Funding Corporation adopted in 1987 and revised in 1989, for disclosure at the Systemwide level of financial and other information in connection with the issuance of Systemwide Debt Securities, as amended from time to time, or any successor thereto.

The *Effective Date* is (a) the tenth day after a Bank receives a notification from the Scorekeeper that it is in Category II or the twenty-fifth day after a Bank receives a notification from the Scorekeeper that it is in Category III, in each case if the Bank does not by that day submit a Continued Access Request to the Committee, or (b) if the Bank does by that day submit a Continued Access Request to the Committee, the seventh day following the day that notice is received that the Request is denied.

FCA means the Farm Credit Administration.

Final Prohibition means the requirements set forth in Section 5.01.

Final Restrictions means the requirements set forth in Section 4.01.

Funding Corporation means the Federal Farm Credit Banks Funding Corporation.

Going Concern Qualification means a qualification expressed pursuant to Statement of Auditing Standards No. 59, "The Auditor's Consideration of an Entity's Ability to Continue As a Going Concern."

Insurance Corporation means the Farm Credit System Insurance Corporation.

Insurance Fund means the Farm Credit Insurance Fund maintained by the Insurance Corporation pursuant to Section 5.60 of the Act.

Interest-Rate Sensitivity Deduction is defined as in Article II of CIPA, and the Model referred to therein, as amended from time to time, or any successor thereto.

Liquidity Deficiency Deduction is defined as in Article II of CIPA, and the Model referred to therein, as amended from time to time, or any successor thereto.

Net Composite Score is defined in Section 1.03.

Parties means the parties to this Agreement. A bank in conservatorship or receivership is not a party to this Agreement.

Permanent Capital is defined as in Section 4.3A(a)(1) of the Act and the regulations thereunder, as amended from time to time, or any successors thereto.

Permanent Capital Figure means a Bank's Permanent Capital as a percentage of its Risk-Adjusted Asset Base.

Person means any human being, partnership, association, joint venture, corporation, legal representative or trust, or any other entity.

Risk-Adjusted Asset Base is defined as in 12 CFR 615.5210(e), as amended from time to time, or any successor thereto.

Scorekeeper is defined in Section 1.01.

Seventy-five (75) Percent Vote means an affirmative vote, through each voting Bank's board of directors or its designee, of 75 percent of those Banks that are entitled to vote on a matter.

System means the Farm Credit System.

System Disclosure Agent means the Funding Corporation or such other disclosure agent as all Banks shall unanimously agree upon, to the extent permitted by law or regulation. For purposes of this definition, "Banks" shall include any System bank in conservatorship or receivership.

Systemwide Debt Securities means Systemwide obligations issued through the Funding Corporation, within the meaning of Sections 4.2(d) and 4.9 of the Act.

Dated: May 11, 1994.

Curtis M. Anderson,

Secretary, Farm Credit Administration Board.

[FR Doc. 94–11907 Filed 5–16–94; 8:45 am]

BILLING CODE 6705–01–P

FEDERAL EMERGENCY MANAGEMENT AGENCY

[FEMA–1025–DR]

Illinois: Amendment to Notice of a Major Disaster Declaration

AGENCY: Federal Emergency Management Agency (FEMA).

ACTION: Notice.

SUMMARY: This notice amends the notice of a major disaster for the State of Illinois, (FEMA–1025–DR), dated April 26, 1994, and related determinations.

EFFECTIVE DATE: May 9, 1994.

FOR FURTHER INFORMATION CONTACT: Pauline C. Campbell, Response and Recovery Directorate, Federal Emergency Management Agency, Washington, DC 20472, (202) 646–3606.

SUPPLEMENTARY INFORMATION: The notice of a major disaster for the State of Illinois dated April 26, 1994, is hereby amended to include the following area among those areas determined to have been adversely affected by the catastrophe declared a major disaster by the President in his declaration of April 26, 1994: St. Clair County for Individual Assistance.

(Catalog of Federal Domestic Assistance No. 83.516, Disaster Assistance.)

Richard W. Krimm,

Associate Director, Response and Recovery Directorate.

[FR Doc. 94–11946 Filed 5–16–94; 8:45 am]

BILLING CODE 6718–08–M

[FEMA–1024–DR]

Oklahoma; Amendment to Notice of a Major Disaster Declaration

AGENCY: Federal Emergency Management Agency (FEMA).

ACTION: Notice.

SUMMARY: This notice amends the notice of a major disaster for the State of Oklahoma (FEMA–1024–DR), dated April 21, 1994, and related determinations.

EFFECTIVE DATE: May 5, 1994.

FOR FURTHER INFORMATION CONTACT: Pauline C. Campbell, Response and Recovery Directorate, Federal Emergency Management Agency, Washington, DC 20472, (202) 646–3606.

SUPPLEMENTARY INFORMATION: Notice is hereby given that the incident period for this disaster is closed effective May 4, 1994.

(Catalog of Federal Domestic Assistance No. 83.516, Disaster Assistance.)

Richard W. Krimm,

Associate Director, Response and Recovery Directorate.

[FR Doc. 94–11947 Filed 5–16–94; 8:45 am]

BILLING CODE 6718–02–M

[FEMA–1026–DR]

Texas; Amendment to Notice of a Major Disaster Declaration

AGENCY: Federal Emergency Management Agency (FEMA).

ACTION: Notice.

SUMMARY: This notice amends the notice of a major disaster for the State of Texas (FEMA–1026–DR), dated April 29, 1994, and related determinations.

EFFECTIVE DATE: May 5, 1994.

FOR FURTHER INFORMATION CONTACT: Pauline C. Campbell, Response and Recovery Directorate, Federal Emergency Management Agency, Washington, DC 20472, (202) 646–3606.

SUPPLEMENTARY INFORMATION: Notice is hereby given that the incident period for this disaster is closed effective May 4, 1994.

(Catalog of Federal Domestic Assistance No. 83.516, Disaster Assistance.)

Richard W. Krimm,

Associate Director, Response and Recovery Directorate.

[FR Doc. 94–11948 Filed 5–16–94; 8:45 am]

BILLING CODE 6718–02–M

[FEMA–1026–DR]

Texas; Amendment to Notice of a Major Disaster Declaration

AGENCY: Federal Emergency Management Agency (FEMA).

ACTION: Notice.

SUMMARY: This notice amends the notice of a major disaster for the State of Texas, (FEMA–1026–DR), dated April 29, 1994, and related determinations.

EFFECTIVE DATE: May 6, 1994.

FOR FURTHER INFORMATION CONTACT: Pauline C. Campbell, Response and Recovery Directorate, Federal Emergency Management Agency, Washington, DC 20472, (202) 646–3606.

SUPPLEMENTARY INFORMATION: The notice of a major disaster for the State of Texas dated April 29, 1994, is hereby amended to include the following area among those areas determined to have been adversely affected by the catastrophe declared a major disaster by the President in his declaration of April 29, 1994: Lamar County for Individual Assistance.

(Catalog of Federal Domestic Assistance No. 83.516, Disaster Assistance.)

Richard W. Krimm,

Associate Director, Response and Recovery Directorate.

[FR Doc. 94–11945 Filed 5–16–94; 8:45 am]

BILLING CODE 6718–02–M

FEDERAL FINANCIAL INSTITUTIONS EXAMINATION COUNCIL

Implementation Issues Arising From FASB Statement No. 114, "Accounting by Creditors for Impairment of a Loan"

AGENCY: Federal Financial Institutions Examination Council.

ACTION: Request for comment.

SUMMARY: The Federal Financial Institutions Examination Council (FFIEC)[1] is seeking public comment on certain issues arising from the adoption by the Financial Accounting Standards Board of Statement No. 114 (FAS 114), "Accounting by creditors for Impairment of a Loan." These issues include the character of the FAS 114 allowance (i.e., whether it should be a general allowance that is includible in Tier 2 capital, or a specific allowance that is not includible in Tier 2 capital) and whether regulatory nonaccrual rules should be maintained for purposes of reporting on the Consolidated Reports of Condition and Income (Call Report) filed by banks and the Thrift Financial Report (TFR) filed by savings associations. After reviewing the public comments and making final decisions on these issues, appropriate changes will be made to the instructions for the Call Report and TFR and other regulatory guidance to incorporate changes arising from the adoption of FAS 114.

DATES: Comments must be received by July 1, 1994.

ADDRESSES: Comments should be directed to Joe M. Cleaver, Executive Secretary, Federal Financial Institutions Examination Council, 2100 Pennsylvania, Avenue, NW, suite 200, Washington DC 20037. (Fax number

[1] The FFIEC consists of representatives from the Board of Governors of the Federal Reserve System (FRB), the Federal Deposit Insurance Corporation (FDIC), the Office of the Comptroller of the Currency (OCC), the Office of Thrift Supervision (OTS) (referred to as the "agencies"), and the National Credit Union Administration. However, this request for comment is not directed to credit unions. Section 1006(c) of the Federal Financial Institutions Examination Council Act requires the FFIEC to develop uniform reporting standards for federally-supervised financial institutions.

202–634–6556.) Comments will be available for public inspection during regular business hours at the above address. Appointments to inspect the comments are encouraged (202) 634–6526.

FOR FURTHER INFORMATION CONTACT: At the FRB: Gerald A. Edwards, Jr., Assistant Director (202) 452–2741 or Charles H. Holm, Project Manager (202) 452–3502. For questions pertaining to regulatory capital issues, Rhoger H. Pugh, Assistant Director (202) 728–5883, or Kevin M. Bertsch, Senior Financial Analyst (202) 452–5265.

At the FDIC: Robert F. Storch, Chief, Accounting Section, Division of Supervision (202) 898–8906, or Doris L. Marsh, Examination Specialist, Accounting Section, Division of Supervision (202) 898–8905.

At the OCC: Eugene W. Green, Deputy Chief Accountant, (202) 874–4933, or Frank Carbone, National Bank Examiner (202) 874–5170.

At the OTS: Robert Fishman, Acting Deputy Assistant Director for Supervision Policy (202) 906–5672, or Timothy Stier, Deputy Chief Accountant (202) 906–5699.

SUPPLEMENTARY INFORMATION:

I. Summary of FAS 114

FAS 114 was adopted in May, 1993 by the Financial Accounting Standards Board (FASB) and is effective for fiscal years beginning after December 15, 1994. The statement applies to all creditors and to all loans that are identified for evaluation of collectibility, except: (1) large groups of smaller-balance homogeneous loans that are collectively evaluated for impairment (such as credit card, residential mortgage, and consumer installment loans); (2) loans that are measured at fair value or at the lower of cost or fair value (such as loans held for sale); (3) leases; and (4) debt securities.

Under this standard, a loan is impaired when it is probable that a creditor will be unable to collect all amounts due (including interest and principal) according to the contractual terms of a loan agreement. When a loan is impaired, a creditor must measure the extent of that impairment by determining the present value of expected future cash flows discounted at the loan's effective interest rate, or as practical expedients, either the loan's observable market price or the fair value of the collateral of a loan if it is collateral dependent. Although a creditor is generally allowed to use any of these three measurement methods to determine the amount of impairment, a creditor must measure impairment based on the fair value of collateral when the creditor determines that foreclosure is probable. If the value of the impaired loan (using the methods described in FAS 114) is less than the recorded balance of the loan, a creditor must recognize the impairment by creating a valuation allowance (referred to in the standard as an "allowance for credit losses") for the difference and recognizing a corresponding bad debt expense.

The FASB has recently proposed to amend FAS 114 to eliminate certain income recognition requirements specified in the standard to permit institutions flexibility in deciding how income on impaired loans should be reported. In addition, certain disclosures regarding income recognition on impaired loans would be required under the proposed amendment to FAS 114.

II. Regulatory Reporting Guidance Related to FAS 114

The FFIEC and the agencies are requiring institutions to adopt FAS 114 as of its effective date for purposes of reporting on the Call Report and TFR. Furthermore, the agencies will permit early adoption. Additional regulatory guidance regarding impaired, collateral dependent loans and the adequacy of the allowance for loan and lease losses (ALLL) is provided below, which the agencies plan to incorporate into regulatory reporting and examination guidance, as appropriate.

The FFIEC and the agencies intend to adhere to the FAS 114 measurement standards discussed above for regulatory reporting purposes in most cases. However, consistent with the "Interagency Policy Statement on the Review and Classification of Commercial Real Estate Loans, "issued on November 7, 1991, the FFIEC and the agencies will expect institutions to measure impaired, collateral-dependent loans for purposes of regulatory reports at the fair value of the collateral.[2]

FAS 114 does not address the overall adequacy of the ALLL. However, in addition to requiring an allowance for credit losses for impaired loans, FAS 114 requires each institution to continue to maintain an allowance that complies with Statement of Financial Accounting Standards No. 5 (FAS 5), "Accounting for Contingencies." Thus, consistent with existing regulatory policy, the ALLL should be adequate to cover all estimated credit losses arising from the loan and lease portfolio, including losses on loans that do not meet FAS 114's impairment criterion.

The agencies do not plan to automatically require additional allowances for credit losses for impaired loans over and above what is required on these loans under FAS 114. However, an additional allowance on impaired loans may be necessary based on consideration of institution-specific factors, such as historical loss experience compared with estimates of such losses, concerns about the reliability of cash flow estimates, or the quality of an institution's loan review function and controls over its process for estimating its FAS 114 allowance.

III. Issues for Comment

The adoption of FAS 114 may require changes in certain existing regulatory reporting and capital requirements and in other supervisory policies. The FFIEC is seeking comment on the specific reporting issues described below.

1. The Character of the FAS 114 Allowance

Should that portion of an institution's allowance established pursuant to FAS 114 be reported and considered as a specific allowance and, thus, not be eligible for inclusion in Tier 2 capital under the agencies' current capital rules? Alternatively, should the FAS 114 allowance be regarded as a general allowance which would be eligible for inclusion in Tier 2 capital subject to existing limits?

The agencies' risk-based capital rules are based upon, and consistent with, the Basle Accord.[3] Under this international framework and the agencies' rules, "general allowances" for loan and lease losses that have been created against unidentified losses and that are not ascribed to particular assets or groups of assets may be included in Tier 2 capital subject to certain limitations.[4] The Accord also states that "where, however, provisions or reserves have been created against identified losses or in respect of an identified deterioration in value of any asset or group or subsets of assets, they are not freely available to meet unidentified losses which may subsequently arise elsewhere in the portfolio and do not possess an essential characteristic of capital. Such provisions or reserves should not,

[2] This supervisory treatment would be applied to all collateral-dependent loans, regardless of the type of collateral.

[3] The Basle Accord is a risk-based capital framework that was proposed by the Basle Committee on Banking Supervision (Basle Supervisors Committee) and endorsed by the Central Bank Governors of the Group of Ten (G–10) countries in July, 1988.

[4] Under the agencies' capital rules, general allowances includible in Tier 2 are limited to 1.25 percent of risk weighted assets and an institution's Tier 2 capital cannot exceed its Tier 1 capital.

therefore, be included in the capital base." Thus, if the allowances established for a certain asset or group of assets in accordance with FAS 114 are determined to be "created against identified losses or in respect of an identified deterioration in value of any asset or group or subsets of assets," then they would be reportable as "specific allowances" for purposes of the Call Report and TFR and would not be eligible for inclusion in Tier 2 capital under the Basle Accord or the current capital rules of the agencies.

Currently, the entire balance of the ALLL for banks and the general valuation allowances for loans and leases (GVAs) for savings associations are reported as general allowances and are includable in Tier 2 capital, subject only to the limitations referenced above. A rationale for this position on the ALLL has been that regulatory charge-off policies require banks to promptly write off identified deteriorations in the value of loans and thereby "cleanse" these allowances. In the case of savings associations, specific valuation allowances are reported separately from GVAs. Although the Securities and Exchange Commission's (SEC) Industry Guide 3 requires the allocation of the ALLL and GVAs to specific groups of loans in Form 10–K annual reports in part to assist analysts in assessing the overall adequacy of allowances, the agencies have determined that such allocations are solely for disclosure purposes and are not "created against identified losses." In addition, the agencies have determined that these disclosure requirements do not affect the availability of these allowances to meet identified losses arising elsewhere in an institution's portfolio.

The adoption of FAS 114 does not affect the necessity for banks to cleanse their allowances through the prompt recognition of identified losses. Furthermore, FAS 114 could be viewed as simply setting forth an estimation technique similar to that prescribed by SEC Industry Guide 3. Thus, while the FAS 114 allowance would be separately disclosed, it need not be viewed as "created against identified losses or in respect of an identified deterioration in value of any asset or group or subsets of assets." Accordingly, allowances established pursuant to FAS 114 could be viewed as general allowances.

On the other hand, FAS 114 requires that valuation allowances be established for the amount by which the value of impaired loans as determined by the analytical methods described in the standard (i.e., present or fair value) is less than the recorded balance of these loans. This analysis may be viewed as more loan specific than previous analytical methods used to estimate the ALLL and GVAs. Thus, FAS 114 could be viewed as requiring the establishment of specific allowances to account for impairment in particular assets or groups of assets.

In order to be considered general allowances under the Basle Accord, allowances must be freely available to absorb losses arising anywhere in a loan portfolio. A determination of whether FAS 114 allowances are freely available to absorb losses should take into account the requirement that, under the standard, the depletion of such allowances through the charge-off of loans other than those for which they were established requires the replenishment of these allowances. On the other hand, this determination should also recognize that the portion of an institution's allowance attributable to FAS 114 is not precluded from being available to meet identified losses on any asset in its portfolio.

While a decision on the character of the FAS 114 allowance has relatively limited reporting implications, it has more important implications for determining institutions' regulatory capital ratios. If FAS 114 allowances are viewed as specific in nature and, thus, inconsistent with the Basle Accord and the agencies' capital rules, the FAS 114 allowance would be deducted from assets and none of it could be included in regulatory capital.[5] Certain institutions may have lower regulatory capital ratios if the FAS 114 allowance is considered a specific allowance rather than a general allowance.

2. Maintenance of Nonaccrual Reporting Requirements

Should regulatory nonaccrual standards be maintained for loans subject to FAS 114?

Under the longstanding reporting standards of the banking agencies (OCC, FRB, and FDIC), banks are required to discontinue the accrual of income on a loan when:

(a) The institution places the loan on a cash basis because of deterioration in the financial condition of the borrower.

(b) The collection in full of contractual principle *or* interest is not expected, or

(c) Principal or interest has been in default for 90 days or more unless the loan is both well secured and in the process of collection.

This third nonaccrual criterion does not apply to 1-to-4 family residential mortgages or consumer loans of banks. However, these organizations are expected to establish appropriate policies for these types of loans in order to prevent the overstatement of income. These nonaccrual requirements prevent the accrual of income in advance of payment on seriously delinquent loans. Savings associations follow similar nonaccrual practices.[6]

FAS 114 was viewed by many as superseding current regulatory nonaccrual standards since it established a method to recognize income based on an impaired loan's present value. However, FASB has recently issued, for public comment, a proposal to eliminate the detailed guidance in the statement on the recognition of income on impaired loans. This proposal allows a creditor to use existing methods for recognizing interest income on impaired loans. Thus, if this proposed change is adopted, an institution's continued use of the regulatory nonaccrual requirements for income recognition purposes would not be inconsistent with FAS 114.

If FASB's proposed changes are adopted and the agencies retain their nonaccrual rules for impaired loans, interest income recognized from such loans would generally be limited to the amount of cash interest received. However, to the extent that this limitation reduces the amount of interest income that institutions would be able to recognize on impaired loans, institutions would generally have a corresponding reduction in the provision for credit losses necessary to bring the values of impaired loans to their present values as defined by FAS 114. Thus, the agencies do not believe that the retention of the regulatory nonaccrual standards would in many cases materially affect the total amount of income reported by institutions.[7]

The agencies have identified several reasons for maintaining their existing nonaccrual requirements. First, retention of the nonaccrual rules for impaired loans will maintain a framework so that institutions report

[5] Consistent with FAS 114 disclosure requirements, the agencies plan to require supplemental reporting of the amount of FAS 114 allowances in regulatory reports.

[6] Under existing generally accepted accounting principles (GAAP) and regulatory reporting instructions, and institution should consider the amount of any accrued but uncollected interest included in its reported assets when estimating its ALLL or GVA.

[7] On the other hand, in other cases, the total amount of income reported under a FAS 114 approach without nonaccrual requirements could materially differ from the total that would be reported if the agencies' nonaccrual requirements apply in conjunction with FAS 114. For example, such a difference could arise when loans are 90 days or more past due but are not deemed to be impaired by the institution.

interest income on a consistent basis. GAAP generally has been silent on whether the accrual of interest is appropriate on impaired loans. As a result, the agencies' regulatory rules have been adopted by institutions for purposes of both their regulatory reports and financial statements and thus became GAAP in practice. Second, nonaccrual policies would prohibit *interest* income from being recognized on impaired loans for uncollected contractual interest. Third, not all seriously delinquent loans would be subject to FAS 114 and the agencies would need to maintain some standard to ensure that interest income is not overstated on these loans.[8] Fourth, since nonaccrual requirements are consistent with the current reporting structure, institutions would not have to significantly change their reporting systems and statistical consistency would be maintained for all uses of these data by regulators, bankers, analysts, and others. Fifth, FASB staff may undertake a project to determine the proper recognition of income on impaired loans. Since such a project could change the income recognition rules under GAAP within a few years, retaining current nonaccrual standards could eliminate the possibility that institutions might have to significantly change their internal systems twice in a short period of time and could thus potentially reduce reporting burden. Finally, if the current reporting requirements for nonaccrual of interest income are retained, the agencies may not have to make significant changes to existing reporting and disclosure requirements for past due and impaired loans.

On the other hand, while retaining regulatory nonaccrual requirements would not be inconsistent with GAAP, it could be viewed as adding another element to accounting for impaired loans, and, thus, could increase the complexity of implementing FAS 114. Furthermore, as noted above, if the regulatory nonaccrual rules for impaired loans are eliminated, the total amount of income reported under FAS 114 for many impaired loans may be the same as if the regulatory nonacrual rules are maintained.

[8] If the agencies retain their nonaccrual requirements for loans subject to FAS 114, it would be less likely that total income from certain past due loans could be overstated by the recognition of uncollected contractual interest solely based on an expectation of collection (as permitted under FAS 114).

3. Other Issues

In addition to the issues discussed above, the agencies seek written comments on the following issues.

1. Comment is sought on (a) how much the adoption of FAS 114 is expected to change overall allowance levels, and (b) what portion of total overall allowances are expected to be related to impaired loans evaluated pursuant to FAS 114.

2. Comment is sought on implementation issues arising from FAS 114 to the extent they relate to U.S. branches and agencies of foreign banks. These entities are required to file quarterly the Report of Assets and Liabilities of U.S. Branches and Agencies of Foreign Banks (002 Report), which in many respects is similar to the bank Call Report. The 002 Report requires U.S. branches and agencies of foreign banks to report the amount of nonaccrual loans (see issue 2 "Maintenance of Nonaccrual Reporting Requirements").

3. Comment is sought on how FAS 114 might affect an institution's internal loan review process and its internal loan classification system for loans subject to FAS 114. In this regard, the FFIEC notes that according to the December 21, 1993, Interagency Policy Statement on the Allowance for Loan and Lease Losses, each institution should ensure that it has a formal credit grading system that can be reconciled with the classification framework used by the agencies.

Dated: May 12, 1994.

Signed:

Keith J. Todd,

Assistant Executive Secretary, Federal Financial Institutions Examination Council.

[FR Doc. 94–11956 Filed 5–16–94; 8:45 am]

BILLING CODE 6210–01–M

FEDERAL RESERVE SYSTEM

Barnett Banks, Inc.; Acquisition of Company Engaged in Permissible Nonbanking Activities

The organization listed in this notice has applied under § 225.23(a)(2) or (f) of the Board's Regulation Y (12 CFR 225.23(a)(2) or (f)) for the Board's approval under section 4(c)(8) of the Bank Holding Company Act (12 U.S.C. 1843(c)(8)) and § 225.21(a) of Regulation Y (12 CFR 225.21(a)) to acquire or control voting securities or assets of a company engaged in a nonbanking activity that is listed in § 225.25 of Regulation Y as closely related to banking and permissible for bank holding companies. Unless otherwise noted, such activities will be conducted throughout the United States.

The application is available for immediate inspection at the Federal Reserve Bank indicated. Once the application has been accepted for processing, it will also be available for inspection at the offices of the Board of Governors. Interested persons may express their views in writing on the question whether consummation of the proposal can "reasonably be expected to produce benefits to the public, such as greater convenience, increased competition, or gains in efficiency, that outweigh possible adverse effects, such as undue concentration of resources, decreased or unfair competition, conflicts of interests, or unsound banking practices." Any request for a hearing on this question must be accompanied by a statement of the reasons a written presentation would not suffice in lieu of a hearing, identifying specifically any questions of fact that are in dispute, summarizing the evidence that would be presented at a hearing, and indicating how the party commenting would be aggrieved by approval of the proposal.

Comments regarding the application must be received at the Reserve Bank indicated or the offices of the Board of Governors not later than June 10, 1994.

A. Federal Reserve Bank of Atlanta (Zane R. Kelley, Vice President) 104 Marietta Street, N.W., Atlanta, Georgia 30303:

1. Barnett Banks, Inc., and Barnett Mortgage Company, both of Jacksonville, Florida; to acquire Loan America Financial Corporation, Miami Lakes, Florida, and thereby engage in making, acquiring, or servicing loans or other extensions of credit, pursuant to § 225.25(b)(1) of the Board's Regulation Y.

Board of Governors of the Federal Reserve System, May 11, 1994.

William W. Wiles,

Secretary of the Board.

[FR Doc. 94-11933 Filed 5-16-94; 8:45 am]

BILLING CODE 6210-01-F

Fleet Financial Group, Inc.; Notice of Applications to Engage de novo in Permissible Nonbanking Activities

The companies listed in this notice have filed an application under § 225.23(a)(1) of the Board's Regulation Y (12 CFR 225.23(a)(1)) for the Board's approval under section 4(c)(8) of the Bank Holding Company Act (12 U.S.C. 1843(c)(8)) and § 225.21(a) of Regulation Y (12 CFR 225.21(a)) to commence or to engage *de novo*, either directly or through a subsidiary, in a nonbanking activity that is listed in § 225.25 of

Regulation Y as closely related to banking and permissible for bank holding companies. Unless otherwise noted, such activities will be conducted throughout the United States.

Each application is available for immediate inspection at the Federal Reserve Bank indicated. Once the application has been accepted for processing, it will also be available for inspection at the offices of the Board of Governors. Interested persons may express their views in writing on the question whether consummation of the proposal can "reasonably be expected to produce benefits to the public, such as greater convenience, increased competition, or gains in efficiency, that outweigh possible adverse effects, such as undue concentration of resources, decreased or unfair competition, conflicts of interests, or unsound banking practices." Any request for a hearing on this question must be accompanied by a statement of the reasons a written presentation would not suffice in lieu of a hearing, identifying specifically any questions of fact that are in dispute, summarizing the evidence that would be presented at a hearing, and indicating how the party commenting would be aggrieved by approval of the proposal.

Unless otherwise noted, comments regarding the applications must be received at the Reserve Bank indicated or the offices of the Board of Governors not later than June 6, 1994.

A. Federal Reserve Bank of Boston (Robert M. Brady, Vice President) 600 Atlantic Avenue, Boston, Massachusetts 02106:

1. Fleet Financial Group, Inc., Providence, Rhode Island to expand *de novo* the activities of its subsidiary Fleet Management and Recovery Corporation, Boston, Massachusetts in asset management, servicing and collection activities to include Canada; investment or financial advice; acting as agent, broker or adviser in certain leasing transactions involving real and personal property; performing appraisals of real estate and tangible and intangible personal property; and arranging commercial real estate equity financing throughout the Uniteded States and Canada, pursuant to §§ 225.25(b)(1) and (b)(13) of the Board's Regulation Y and the approval of November 4, 1993. Comments. on this application must be received by may 31, 1994.

B. Federal Reserve Bank of Chicago (James A. Bluemle, Vice President) 230 South LaSalle Street, Chicago, Illinois 60690:

1. First Midwest Corporation of Delaware, Melrose Park, Illinois to engage *de novo* through its subsidiary Midwest One Mortgage Services, Inc., Melrose Park, Illinois in originating, processing, brokering and servicing 1-4 family residential mortgages pursuant to § 225.25(b)(1) of the Board's Regulation Y. The activities will be conducted in the greater Chicago area including Cook Lake, Will, DuPage and McHenry Countries.

C. Federal Reserve Bank of Chicago (James A. Bluemle, Vice President) 230 South LaSalle Street, Chicago, Illinois 60690:

1. First of America Bank Corporation, Kalamazoo, Michigan; to engage *de novo* in providing securities brokerage services in combination with investment advisory services; providing financial advice to state and local governments; and underwriting and dealing in government obligations and money market instruments pursuant to §§ 225.25(b)(15), (b)(4)(v) and (b)(16), respectively of the Board's Regulation Y.

Board of Governors of the Federal Reserve System, May 11, 1994.

William W. Wiles,

Secretary of the Board.

[FR Doc. 94-11934 Filed 5-16-94; 8:45 am]

BILLING CODE 6210-01-F

Hubco Inc., et al.; Formations of; Acquisitions by; and Mergers of Bank Holding Companies

The companies listed in this notice have applied for the Board's approval under section 3 of the Bank Holding Company Act (12 U.S.C. 1842) and § 225.14 of the Board's Regulation Y (12 CFR 225.14) to become a bank holding company or to acquire a bank or bank holding company. The factors that are considered in acting on the applications are set forth in section 3(c) of the Act (12 U.S.C. 1842(c)).

Each application is available for immediate inspection at the Federal Reserve Bank indicated. Once the application has been accepted for processing, it will also be available for inspection at the offices of the Board of Governors. Interested persons may express their views in writing to the Reserve Bank or to the offices of the Board of Governors. Any comment on an application that requests a hearing must include a statement of why a written presentation would not suffice in lieu of a hearing, identifying specifically any questions of fact that are in dispute and summarizing the evidence that would be presented at a hearing.

Unless otherwise noted, comments regarding each of these applications must be received not later than June 10, 1994.

A. Federal Reserve Bank of New York (William L. Rutledge, Senior Vice President) 33 Liberty Street, New York, New York 10045:

1. Hubco, Inc., Union City, New Jersey; to merge with or acquire 27.9 percent of the voting shares of Washington Bancorp, Hoboken, New Jersey, and thereby indirectly acquire Washington Savings Bank, Hoboken, New Jersey.

B. Federal Reserve Bank of Atlanta (Zane R. Kelley, Vice President) 104 Marietta Street, N.W., Atlanta, Georgia 30303:

1. First National Bancorp, Gainsville, Georgia; to merge with Barrow Bancshares, Inc., Winder, Georgia, and thereby indirectly acquire Barrow Bank & Trust Company, Winder, Georgia.

2. Triangle Bancorporation, Berry, Alabama; to become a bank holding company by acquiring 100 percent of the voting shares of Bank of Carbon Hill, Carbon Hill, Alabama, Bank of Berry, Berry, Alabama, and Bank of Parrish, Parrish, Alabama.

C. Federal Reserve Bank of Minneapolis (James M. Lyon, Vice President) 250 Marquette Avenue, Minneapolis, Minnesota 55480:

1. The Bridger Company, Bridger, Montana; to acquire 100 percent of the voting shares of Norwest Bank Wyoming Lovell, N.A., Lovell, Wyoming.

D. Federal Reserve Bank of San Francisco (Kenneth R. Binning, Director, Bank Holding Company) 101 Market Street, San Francisco, California 94105:

1. Union International Financial, South Pasadena, California; to become a bank holding company by acquiring 100 percent of the voting shares of Pacific Business Bank, Carson, California.

Board of Governors of the Federal Reserve System, May 11, 1994.

William W. Wiles,

Secretary of the Board.

[FR Doc. 94-11935 Filed 5-16-94; 8:45 am]

BILLING CODE 6210-01-F

J.P. Morgan & Co. Incorporated; Permissible Nonbanking Activities; Correction

This notice corrects a notice (FR Doc. 94-10526) published on page 22853 of the issue for Tuesday, May 3, 1994. It supersedes the correction notice published in the issue of May 10, 1994, on page 24158.

Under the Federal Reserve Bank of New York heading, the entry for JP Morgan & Co. Incorporated is revised to read as follows:

1. J.P. Morgan & Co. Incorporated, New York, New York; to retain a

partnership investment of 39.6 percent of equity of Henry Phipps Plaza South Associates Limited Partnership and to increase that interest to 59.4 percent, and thereby engage in community development activities pursuant to § 225.25(b)(6) of the Board's Regulation Y; to retain 6.06 percent equity interest in The New York Equity Fund 1989 Limited Partnership and 18.73 percent equity interest in HUDC TC Limited Partnership, and thereby to engage in community development activities pursuant to § 225.25(b)(6) of the Board's Regulation Y.

Comments on this application must be received by May 27, 1994.

Board of Governors of the Federal Reserve System, May 11 1994.

William W. Wiles,

Secretary of the Board.

[FR Doc. 94-11936 Filed 5-16-94; 8:45 am]

BILLING CODE 6210-01-F

DEPARTMENT OF HEALTH AND HUMAN SERVICES

National Institutes of Health

National Heart, Lung and Blood Institute; Opportunity for a Cooperative Research and Development Agreement (CRADA) for the Development of Adenoviral-Mediated Gene Therapy for the Treatment of Cardiovascular Conditions

AGENCY: National Institutes of Health, PHS, HHS.

ACTION: Notice.

SUMMARY: The National Heart, Lung and Blood Institute (NHLBI) of the National Institutes of Health is seeking capability statements from parties interested in entering into a Cooperative Research and Development Agreement (CRADA) on a project to develop adenoviral-mediated gene therapy approaches to treating cardiovascular conditions. This project is with the Cardiology Branch, Bethesda, MD. The goal is to use the respective strength of both partners in developing new approaches to two major cardiovascular conditions: (1) Restenosis after angioplasty and (2) stimulation of collateral formation in the myocardium.

It is estimated that several hundred thousand U.S. patients will undergo angioplasty this year alone and a similar number will have coronary bypass surgery. To date, the major limitation of angioplasty is a narrowing of the blood vessel at the site of balloon dilation. This process, termed restenosis, occurs in one-third to one-half of patients undergoing angioplasty. There appears at present no effective way of determining which patients will suffer from restenosis, nor is there an effective treatment for the condition. NHLBI has demonstrated that adenoviral-mediated gene transfer can efficiently target areas of vascular injury and is interested in pursuing a strategy where potentially therapeutic genes can be delivered via adenoviral vectors to angioplasty lesions.

NHLBI has also demonstrated that the administration of peptide growth factors can accelerate myocardial angiogenesis and that adenoviral vectors can efficiently transduce the myocardium. In a second area of collaboration, NHLBI wishes to extend these studies to deliver genes encoding known angiogenic factors to the myocardium using adenoviral vectors.

It is anticipated that the commercial collaborator will be able to provide a knowledge of recombinant adenoviral vector construction. In addition, the collaborator will be expected to have the capacity to produce recombinant adenoviral stocks in sufficient quantity so as to allow for the testing of these concepts on small and/or large animal models. Such studies might ultimately lead to Phase I or II trials of exceptional candidates which the company could handle in possible conjunction with NHLBI. Collaborator will also be expected to contribute funding for supplies and personnel to support this project.

Capability statements should be submitted to Ms. Mary Jude Jacobs, National Institutes of Health, National Heart, Lung and Blood Institute, 9000 Rockville Pike, Bldg. 31, rm. 5A48, Bethesda, MD 20892.

DATES: Capability statements must be received by NIH on or before June 16, 1994.

Dated: April 25, 1994.

Barbara M. McGarey,

Deputy Director, Office of Technology Transfer.

[FR Doc. 94-11904 Filed 5-16-94; 8:45 am]

BILLING CODE 4140-01-M

National Heart, Lung, and Blood Institute; Meeting of Research Training Review Committee

Pursuant to Public Law 92-463, notice is hereby given of the meeting of the Research Training Review Committee, National Heart, Lung, and Blood Institute, National Institutes of Health, on June 26-27, 1994, at the Hyatt Regency Bethesda, One Bethesda Metro Center, Bethesda, Maryland 20814.

This meeting will be open to the public on June 26, from 7:30 p.m. to approximately 8:30 p.m., to discuss administrative details and to hear reports concerning the current status of the National Heart, Lung, and Blood Institute. Attendance by the public is limited to space available.

In accordance with the provisions set forth in secs. 552b(c)(4) and 552b(c)(6), title 5, U.S.C., and sec. 10(d) of Public Law 92-463, the meeting will be closed to the public on June 26, from 8:30 p.m. to adjournment on June 27, for the review, discussion, and evaluation of individual grant applications. These applications and the discussions could reveal confidential trade secrets or commercial property such as patentable material and personal information concerning individuals associated with the applications, the disclosure of which would constitute a clearly unwarranted invasion of personal privacy.

Terry Long, Chief, Communications and Public Information Branch, National Heart, Lung, and Blood Institute, Building 31, room 4A21, National Institutes of Health, Bethesda, Maryland 20892, (301) 496-4236, will provide a summary of the meeting and a roster of the Committee members.

Individuals who plan to attend and need special assistance, such as sign language interpretation or other reasonable accommodations, should contact the Scientific Review Administrator in advance of the meeting.

Dr. Kathryn Ballard, Scientific Review Administrator, NHLBI, Westwood Building, room 550, Bethesda, Maryland 20892, (301) 594-7450, will furnish substantive program information.

(Catalog of Federal Domestic Assistance Program Nos. 93.837, Heart and Vascular Disease Research; 93.838, Lung Diseases Research; and 93.839, Blood Diseases and Resources Research, National Institutes of Health.)

Dated: May 11, 1994.

Susan K. Feldman,

Committee Management Officer, NIH.

[FR Doc. 94-11901 Filed 5-16-94; 8:45 am]

BILLING CODE 4140-01-M

National Institute on Deafness and Other Communications Disorders; Meeting of the Communication Disorders Review Committee

Pursuant to Public Law 92-463, notice is hereby given of a meeting of the Communication Disorders Review Committee on June 22-23, 1994. The Committee will meet in the Palladian West conference room in the Holiday

Inn, 5520 Wisconsin Avenue, Chevy Chase, Maryland.

The Committee meeting will be open to the public from 8 a.m. until approximately 8:30 a.m. on June 22 to discuss administrative details relating to Committee business. Attendance by the public will be limited to space available.

The Meeting of the Committee will be closed to the public from approximately 8:30 a.m. on June 22 until adjournment on June 23 in accordance with provisions set forth in secs. 552(c)(4) and 552b(c)(6), Title 5, U.S.C. and sec. 10(d) of Public Law 92–463, for the review, discussion, and evaluation of individual grant applications. These deliberations could reveal confidential trade secrets or commercial property, such as patentable material, and personal information concerning individuals associated with the applications, disclosure of which would constitute a clearly unwarranted invasion of personal privacy.

Further information concerning the Committee meeting may be obtained from Dr. Craig A. Jordan, Scientific Review Administrator, National Institute on Deafness and Other Communication Disorders, room 400B Executive Plaza South, Bethesda, Maryland 20892, 301–496–8683. Individuals who plan to attend and need special assistance such as sign language interpretation or other reasonable accommodations, please contact Dr. Jordan two weeks prior to the meeting.

(Catalog of Federal Domestic Assistance Program No. 93.173 Biological Research Related to Deafness and Other Communication Disorders)

Dated: May 11, 1994.

Susan K. Feldman,

Committee Management Officer, NIH.

[FR Doc. 94–11900 Filed 5–16–94; 8:45 am]

BILLING CODE 4140–01–M

National Cancer Institute; Meeting of the Subcommittee to Evaluate the National Cancer Program, National Cancer Advisory Board

Pursuant to Public Law 92–463, notice is hereby given of the meeting of the Subcommittee to Evaluate the National Cancer Program, National Cancer Advisory Board, National Cancer Institute, National Institutes of Health on June 1–2, 1994 at the Bethesda Hyatt Regency, One Bethesda Metro Center, Bethesda, Maryland 20814.

The meeting will be open to the public from 2 pm to recess on June 1; and from 8:30 am to adjournment on June 2, 1994. Attendance by the public will be limited to space available.

Discussion will address the evaluation and achievements of the National Cancer Program.

Ms. Carole Frank, Committee Management Specialist, National Cancer Institute, National Institutes of Health, Executive Plaza North, room 630M, 9000 Rockville Pike, Bethesda, Maryland 20892 (301/496–5708), will provide a summary of the meeting and a roster of the Subcommittee members upon request.

Ms. Cherie Nichols, Executive Secretary, Subcommittee to Evaluate the National Cancer Program, National Cancer Advisory Board, National Cancer Institute, National Institutes of Health, Building 31, room 11A23, Bethesda, Maryland 20892 (301/496–5515), will furnish substantive program information.

Individuals who plan to attend and need special assistance, such as sign language interpretation or other reasonable accommodations, should contact Ms. Cherie Nichols on (301/496–5515) in advance of the meeting.

Dated: May 9, 1994.

Susan K. Feldman,

Committee Management Officer, NIH.

[FR Doc. 94–11905 Filed 5–16–94; 8:45 am]

BILLING CODE 4140–01–M

National Cancer Institute; Meeting of the Board of Scientific Counselors, Division of Cancer Biology, Diagnosis, and Centers

Pursuant to Public Law,, 92–463, notice is hereby given of the meeting of the Board of Scientific Counselors, Division of Cancer Biology, Diagnosis, and Centers on June 6, 1994. The meeting will be held in Building 31, C Wing, Conference Room 10, National Institutes of Health, 9000 Rockville Pike, Bethesda, Maryland 20892.

This meeting will be open to the public from 8:30 am until 2:45 pm for the review of the Extramural Research Program, the Centers, Training, and Resources Program, and for concept review of proposed research projects. Attendance by the public will be limited to space available.

In accordance with the provisions set forth in Section 552(c)(6), title 5, U.S.C. and Section 10(d) of Public Law 92–463, the meeting will be closed to the public from 2:45 pm to adjournment for the review and discussion of previous site visit reports and responses, including consideration of personnel qualifications and performance, the competence of individual investigators, medical files of individual research subjects, and similar items, the disclosure of which would constitute a clearly unwarranted invasion of personal privacy.

Ms. Carole A. Frank, Committee Management Officer, National Cancer Institute, Executive Plaza North, room 630E, National Institutes of Health, Bethesda, Maryland 20892 (301/496–5708) will provide summaries of the meeting and rosters of committee members, upon request.

Dr. Ihor J. Masnyk, Executive Secretary of the Board of Scientific Counselors, Division of Cancer Biology, Diagnosis, and Centers, National Cancer Institute, Building 31, room 3A11, National Institutes of Health, Bethesda, Maryland 20892 (301/496–3251) will furnish substantive program information

Individuals who plan to attend and need special assistance, such as sign language interpretation or other special accommodations, should contact Mrs. Sandra Carter, (301) 496–4345, in advance of the meeting.

(Catalog of Federal Domestic Assistance Program Numbers: 93.393, Cancer Cause and Prevention Research; 93.394, Cancer Detection and Diagnosis Research; 93.395, Cancer Treatment Research; 93.396, Cancer Biology Research; 93.397, Cancer Centers Support; 93.398, Cancer Research Manpower; 93.399, Cancer Control.)

Dated: May 9, 1994.

Susan K. Feldman,

Committee Management Officer, NIH.

[FR Doc. 94–11903 Filed 5–16–94; 8:45 am]

BILLING CODE 4141–01–M

Division of Research Grants; Meeting

Pursuant to Public Law 92–463, notice is hereby given of meetings of the Division of Research Grants Behavioral and Neurosciences Special Emphasis Panel

The meetings will be closed in accordance with the provisions set forth in Section 552b(c)(4) and 552b(c)(6), title 5, U.S.C. and Section 10(d) of Public Law 92–463, for the review, discussion and evaluation of individual grant applications in the various areas and disciplines related to behavior and neuroscience. These applications and the discussions could reveal confidential trade secrets or commercial property such as patentable material and personal information concerning individuals associated with the applications, the disclosure of which would constitute a clearly unwarranted invasion of personal privacy.

The Office of Committee Management, Division of Research Grants, Westwood Building, National Institutes of Health, Bethesda, Maryland 20892, telephone 301–594–7265, will

furnish summaries of the meetings and rosters of panel members.

Meeting To Review Individual Grant Applications

Scientific Review Administrator: Dr. Leonard Jacubczak (301) 594–7198.
Date of Meeting: June 27, 1994.
Place of Meeting: Sheraton City Centre, Washington, DC.
Time of Meeting: 8 a.m.

Scientific Review Administrator: Dr. Peggy McCardle (301) 594–7293.
Date of Meeting: June 27, 1994.
Place of Meeting: Westwood Bldg, rm 305, NIH, Bethesda, MD, Telephone Conference.
Time of Meeting: 1 p.m.

(Catalog of Federal Domestic Assistance Program Nos. 93.306, 93.333, 93.337, 93.393–93.396, 93.837–93.844, 93.846–93.878, 93.892, 93.893, National Institutes of Health, HHS)

Dated: May 11, 1994.

Susan K. Feldman,

Committee Management Officer, NIH.

[FR Doc. 94–11902 Filed 5–16–94; 8:45 am]

BILLING CODE 4140–01–M

DEPARTMENT OF HOUSING AND URBAN DEVELOPMENT

Office of the Secretary

[Docket No. N–94–3038; FR–2736–N–12]

Regulatory Waiver Requests Granted

AGENCY: Office of the Secretary, HUD.

ACTION: Public Notice of the Granting of Regulatory Waivers.

SUMMARY: Under section 106 of the Department of Housing and Urban Development Reform Act of 1989 (Reform Act), the Department is required to make public all approval actions taken on waivers of regulations. This Notice provides notification of waivers granted during the period from October 1 to December 31, 1993.

FOR FURTHER INFORMATION CONTACT: For general information about this Notice, contact Myra L. Ransick, Assistant General Counsel for Regulations, Room 10276, Department of Housing and Urban Development, 451 Seventh Street, SW, Washington, DC 20410; (202) 708–3055, (TDD) (202) 708–3259. (These are not toll-free numbers.) For information concerning a particular waiver action, contact the person whose name and address is set out for the particular item in the accompanying list of waiver-grant actions.

SUPPLEMENTARY INFORMATION: Section 106 of the Reform Act amended Section 7 of the Department of Housing and Urban Development Act (42 U.S.C. 3535(q)(3)) to provide:

1. Any waiver of a regulation must be in writing and must specify the grounds for approving the waiver;

2. Authority to approve a waiver of a regulation may be delegated by the Secretary only to an individual of Assistant Secretary rank or equivalent rank, and the person to whom authority to waive is delegated must also have authority to issue the particular regulation to be waived;

3. Not less than quarterly, the Secretary must notify the public of all waivers of regulations that the Department has approved, by publishing a Notice in the **Federal Register.** These Notices (each covering the period since the most recent previous notification) shall:

a. Identify the project, activity, or undertaking involved;

b. Describe the nature of the provision waived, and the designation of the provision;

c. Indicate the name and title of the person who granted the waiver request;

d. Describe briefly the grounds for approval of the request;

e. State how additional information about a particular waiver grant action may be obtained.

Today's document notifies the public of HUD's waiver-grant activity from October 1 to December 30, 1993. The next Notice, which will be published in the near future, will cover the period from January 1, through March 31, 1994.

For ease of reference, waiver requests granted by departmental officials authorized to grant waivers are listed in a sequence keyed to the section number of the HUD regulation involved in the waiver action. For example, a waiver-grant action involving exercise of authority under 24 CFR 24.200 (involving the waiver of a provision in part 24) would come early in the sequence, while waivers in the Section 8 and Section 202 programs (24 CFR chapter VIII) would be among the last matters listed. Where more than one regulatory provision is involved in the grant of a particular waiver request, the action is listed under the section number of the first regulatory requirement in Title 24 that is being waived as part of the waiver-grant action. (For example, a waiver of both § 811.105(b) and § 811.107(a) would appear sequentially in the listing under § 811.105(b).) Waiver-grant actions involving the same initial regulatory citation are in time sequence beginning with the earliest-dated waiver-grant action.

Should the Department received additional reports of waiver actions taken during the period covered by this report before the next report is published, the next updated report will include these earlier actions.

Accordingly, information about approved waiver requests pertaining to regulations of the Department is provided in the Appendix to this Notice.

Dated: May 6, 1994.

Henry G. Cisneros,

Secretary.

Appendix—Listing of Waivers of Regulatory Requirements Granted by Officers of the Department of Housing and Urban Development October 1, 1993 Through December 31, 1993

Note to the Reader: The person to be contacted for additional information about these waivers is:

Robert J. Coyle, Director, Title I Insurance Division, Department of Housing and Urban Development, 490 L'Enfant Plaza East, Suite 3214, Washington, DC 20024, Telephone 202–755–7400

1. Regulation: 24 CFR 201.23(a).
Project/Activity: Title I manufactured home loan to provide replacement housing for victims of the flooding along the Mississippi River.
Nature of Requirement: Section 201.23(a) of the Title I regulations permits manufactured home purchasers to use borrowed funds for the downpayment, provided that the loan is secured by property or collateral other than the manufactured home.
Granted By: Nicolas P. Retsinas, Assistant Secretary of Housing-Federal Housing Commissioner.
Date Granted: October 1, 1993.
Reason Waived: As a result of flooding along the Mississippi River and its tributaries, the borrowers' manufactured home was destroyed. The Federal Emergency Management Agency certified the borrowers as being eligible for an unsecured Small Business Administration loan. The proceeds of the SBA loan were used to pay off the outstanding loan on their manufactured home, and left enough money to make a downpayment on a new manufactured home, to be financed with a Title I loan. Because of the urgent need to assist families displaced by the Mississippi River flooding, HUD agreed to waive the limitation on using an unsecured loan for the downpayment.

2. Regulation: 24 CFR 201.23(a).
Project/Activity: Title I manufactured home loan to provide replacement housing for victims of the flooding along the Mississippi River.
Nature of Requirement: Section 201.23(a) of the Title I regulations permits manufactured home purchasers to use borrowed funds for the downpayment, provided that the loan is secured by property or collateral other than the manufactured home.
Granted By: Nicolas P. Retsinas, Assistant Secretary of Housing-Federal Housing Commissioner.
Date Granted: November 12, 1993.
Reason Waived: As a result of flooding along the Mississippi River and its

tributaries, the borrowers' manufactured home was destroyed. The Federal Emergency Management Agency certified the borrowers as being eligible for an unsecured Small Business Administration loan. The proceeds of the SBA loan were used to pay off the outstanding loan on their manufactured home, and left enough money to make a downpayment on a new manufactured home, to be financed with a Title I loan. Because of the urgent need to assist families displaced by the Mississippi River flooding, HUD agreed to waive the limitation on using an unsecured loan for the downpayment.

Note to Reader: The person to be contacted for additional information about these waivers is:

Morris E. Carter, Director, Single Family Development Division, Office of Insured Single Family Housing, U.S. Department of Housing and Urban Development, 451 Seventh Street, SW., Washington, DC 20410, Phone: (202) 708–2700, TDD: (202) 708–4594.

3–4. Regulation: 24 CFR 203.49(c).

Project/Activity: CTX Mortgage Company and Adjustable Rate Mortgages.

Nature of Requirement: The regulation, cited above, requires that interest rate adjustments must occur on an annual basis, except that the first adjustment may occur no sooner than 12 months and no later than 18 months from the due date of the mortgagor's first monthly payment.

Granted By: Nicolas P. Retsinas, Assistant Secretary for Housing—Federal Housing Commissioner.

Date Granted: December 9, 1993.

Reason Waived: CTX Mortgage Company requested a waiver in order to extend the initial adjustment date on one loan in order to make it eligible for placement in a GNMA pool. Ineligibility for the pool would result in a financial hardship to the mortgagee. Extension of the date would not have an adverse effect on the mortgagor. Therefore, to facilitate the continuing participation of this mortgagee in the FHA Adjustable Rate Mortgage Program, a waiver was granted conditioned on the mortgagee obtaining written consent from the mortgagors to the modification of the initial adjustment date.

Note to Reader: The person to be contacted for additional information about these waivers is:

Janice D. Rattley, Director, Office of Construction, Rehabilitation and Maintenance, Office of Public and Indian Housing, Department of Housing and Urban Development, 451 Seventh Street, SW., Washington DC 20410, Phone: (202) 708–1800 (This is not a toll-free number)

5. Regulation: 24 CFR 941.404, 502, and 503.

Project/Activity: Public Housing Development, Project Number VA 7–28, Richmond Redevelopment and Housing Authority (RRDH).

Nature of Requirement: Requires prior HUD review and approval of design documents, construction contracts, etc.

Granted By: JOseph. Shuldiner, Assistant Secretary for Public and Indian Housing.

Date Granted: November 4, 1993.

Reason Waived: To allow the RRDH to acquire HUD-owned properties within 60 days of an offer to purchase requirement of the Housing Office of Property Disposition.

Note to Reader: The person to be contacted for additional information about these waivers is:

Mr. Dom Nessi, Director, Office of Nature American Programs, Department of Housing and Urban Development, 451 Seventh Street, SW., Washington, DC 20410, Phone: (202) 708–1015, TDD: (202) 708–0850 (These are not toll-free numbers)

6. Regulation: 24 CFR 905.325.

Project/Activity: Establishment of ceiling rents for the Oneida Housing Authority.

Nature of the Requirement: Waiver of the Regulation cited above is required to allow establishment of ceiling rents for their Rental Program.

Granted By: Joseph Schuldiner, Assistant Secretary.

Date Granted: October 20, 1993.

Reason Waived: This waiver was requested and granted to allow the Oneida Housing Authority to establish ceiling rents for their rental program in accordance with PIH Notice 89–21, which provides for the establishment of ceiling rents in a rental Indian housing program.

Note to Reader: The person to be contacted for additional information about these waivers is:

John Comerford, Director, Financial Management Division, Office of Assisted Housing, Office of Public and Indian Housing, Department of Housing and Urban Development, 451 Seventh Street, SW., Washington, DC 20410, Phone: (202) 708-1872, TDD: (202) 708-0850 (These are not toll-free numbers)

7. Regulation: 24 CFR 990.110.

Project/Activity: Breckenridge Housing Authority, MN In determining the operating subsidy eligibility, a request was made to extend the deadline for submission of a request for adjustment to the Allowable Expense Level.

Nature of Requirement: The Final Rule for PFS Allowable Expense Level appeals imposed a sixty day deadline on submission of request for adjustment.

Granted By: Joseph Shuldiner, Assistant Secretary.

Date Granted: October 4, 1993.

Reason Waiver: The Housing Authority Fee Accountant completed the appeal and mailed it to the Housing Authority, however, the package was not received by the Housing Authority. This waiver was granted based on this circumstance and the Housing Agency's eligibility for an adjustment.

8. Regulation: 24 CFR 990.104.

Project/Activity: Montgomery Housing Authority, AL In determining the operating subsidy eligibility, a request was made for funding for six units approved for economic self-sufficiency and anti-drug programs.

Nature of Requirement: The operating subsidy calculation excludes funding for units removed from the dwelling rental inventory.

Granted By: Joseph Shuldiner, Assistant Secretary.

Date Granted: October 7, 1993.

Reason Wavier: To allow additional subsidy for units approved for non-dwelling use to promote economic self-sufficiency services and anti-drug programs pending publication of a final rule implementing this change to the regulation.

9. Regulation: 24 CFR 990.109(b)(3)(iv).

Project/Activity: A request was made by the Breckenridge, MN Housing and Redevelopment Authority to use its actual occupancy rate of 76% in determining its operating subsidy eligibility for its fiscal year ending 3/31/93 and its actual occupancy rate of 70% for its fiscal year ending 3/31/94.

Nature of Requirement: A Public House Agency that has completed a Comprehensive Occupancy Plan (COP) without achieving a 97% occupancy percentage or having an average of five or fewer vacant units must use a projected occupancy rate of 97%.

Granted By: Joseph Shuldiner, Assistant Secretary.

Date Granted: October 18, 1993.

Reason Waived: The Breckenridge Housing and Redevelopment Authority is a small Authority with 78 units of elderly housing. It has been experiencing a vacancy problem for the past several years during which it has pursued many vacancy reduction strategies without success. Previous waivers have been issued permitting the Authority to use a lower occupancy percentage.

10. Regulation: 24 CFR 990.104.

Project/Activity: Marquette Housing Commission, MI In determining the operating subsidy eligibility, a request was made for funding for two units approved for economic self-sufficiency and anti-drug programs.

Nature of Requirement: The operating subsidy calculation excludes funding for units removed from the dwelling rental inventory.

Granted By: Joseph Shuldiner, Assistant Secretary.

Date Granted: October 20, 1993.

Reason Waived: To allow additional subsidy for units approved for non-dwelling use to promote economic self-sufficiency services and anti-drug programs pending publication of a final rule implementing this change to the regulation.

11. Regulation: 24 CFR 990.104.

Project/Activity: Richmond Redevelopment and Housing Authority, MI. In determining the operating subsidy eligibility, a request was made for authority to approve funding for twenty units approved for an anti-drug program.

Nature of Requirement: The operating subsidy calculation excludes funding for units removed from the dwelling rental inventory.

Granted By: Joseph Shuldiner, Assistant Secretary.

Date Granted: October 22, 1993.

Reason Waived: To allow additional subsidy for units approved for non-dwelling use to promote economic self-sufficiency services and anti-drug program pending publication of a final rule implementing this change to the regulation.

12. Regulation: 24 CFR 990.104.

Project/Activity: Muskegon Heights Housing Authority, MI. In determining the operating subsidy eligibility, a request was made for funding for one unit approved for an anti-drug program.

Nature of Requirement: The operating subsidy calculation excludes funding for units removed from the dwelling rental inventory.

Granted By: Joseph Shuldiner, Assistant Secretary.

Date Granted: November 17, 1993.

Reason Waived: To allow additional subsidy for units approved for non-dwelling use to promote economic self-sufficiency services and anti-drug program pending publication of a final rule implementing this change to the regulation.

13. Regulation: 24 CFR 990.104.

Project/Activity: Charleston Housing Authority, WV. In determining the operating subsidy eligibility, a request was made for funding for eight units approved for an anti-drug program.

Nature of Requirement: The operating subsidy calculation excludes funding for units removed from the dwelling rental inventory.

Granted By: Joseph Shuldiner, Assistant Secretary.

Date Granted: November 24, 1993.

Reason Waived: To allow additional subsidy for units approved for non-dwelling use to promote economic self-sufficiency services and anti-drug program pending publication of a final rule implementing this change to the regulation.

14. Regulation: 24 CFR 990.118(d).

Project/Activity: Cuyahoga Metropolitan Housing Authority, OH. In determining operating subsidy eligibility, a request was made to terminate the existing Comprehensive Occupancy Plan as of December 31, 1992.

Nature of Requirement: The regulation cites limited conditions under which the timeframe for a Comprehensive Occupancy Plan can be changed.

Granted By: Joseph Shuldiner, Assistant Secretary.

Date Granted: December 7, 1993.

Reason Waived: The Housing Authority's thirteen year Comprehensive Occupancy Plan (COP) was the longest term of any COP for a Housing Authority. The relative inflexibility of the COP has caused the Plan to become obsolete over time. Recognition has not been given to changes in modernization schedules, to new funding approaches such as the Comprehensive Grant formula and to new programs such as the Urban Revitalization Demonstration and Vacancy Reduction Programs. The Authority would be better off without a COP because it could then use an occupancy rate based on 97% reduced by the number of units that are in a funded, on-schedule modernization program. Since it is very difficult for a large, troubled authority to adhere to a long term plan with fixed occupancy goals, approval was granted to terminate the COP and use an occupancy percentage adjusted for units in funded, on-schedule modernization programs.

15. Regulation: 24 CFR 990.109(b)(3)(iv).

Project/Activity: A request was made by the Gilbert, MN Housing and Redevelopment Authority to use its actual occupancy rate of 88% in determining its operating subsidy eligibility for its fiscal year ending 6/30/94.

Nature of Requirement: A Housing Authority that has completed a Comprehensive Occupancy Plan (COP) without achieving a 97% occupancy percentage or having an average of five or fewer vacant units must use a projected occupancy rate of 97%.

Granted By: Joseph Shuldiner, Assistant Secretary.

Date Granted: December 17, 1993.

Reason Waived: The Gilbert Housing and Redevelopment Authority is a small Authority with 49 units. It has been experiencing a vacancy problem for the past several years during which it has pursued many vacancy reduction strategies without success. Previous waivers have been issued permitting the Authority to use a lower occupancy percentage.

16. Regulation: 24 CFR 990.109(b)(3)(iv).

Project/Activity: Indianapolis Housing Authority, IN. In determining operating subsidy eligibility, a request was made to allow a team comprised of Headquarters, Regional and Field Office staff to consult with the Housing Authority in order to develop a suitable approach to the vacancy problems of the Housing Authority.

Nature of Requirement: The regulation requires a Low Occupancy PHA without an approved Comprehensive Occupancy Plan (COP) to use a projected occupancy percentage of 97%.

Granted By: Joseph Shuldiner, Assistant Secretary.

Date Granted: December 20, 1993.

Reason Waived: The Department has found that large troubled Housing Authorities often have vacancy problems of such a magnitude and complexity that long term planning is very difficult. COPs for such authorities quickly become obsolete. Agreement was reached on an alternative approach to a COP in which the Housing Authority uses a lower occupancy percentage and at least 60% of the resulting increase in operating subsidy is to be used for specific, identifiable actions to increase occupancy. The Housing Authority is responsible for developing a vacancy reduction strategy which will be approved by HUD. HUD will also conduct an on-site review in November 1994 to review progress. Based on this agreement an occupancy percentage of 73% was approved for the fiscal year ending 12/31/93 and 75% for the fiscal year ending 12/31/94.

17. Regulation: 24 CFR 990.104.

Project/Activity: York Housing Authority, PA. In determining the operating subsidy eligibility, a request was made for funding for one unit approved for an anti-drug program.

Nature of Requirement: The operating subsidy calculation excludes funding for units removed from the dwelling rental inventory.

Granted By: Joseph Shuldiner, Assistant Secretary.

Date Granted: December 22, 1993.

Reason Waived: To allow additional subsidy for units approved for non-dwelling use to promote economic self-sufficiency services and anti-drug programs pending publication of a final rule implementing this change to the regulation.

18. Regulation: 24 CFR 990.104.

Project/Activity: Arkadelphia Housing Authority, AR. In determining the operating subsidy eligibility, a request was made for funding for one unit approved for an anti-drug program.

Nature of Requirement: The operating subsidy calculation excludes funding for units removed from the dwelling rental inventory.

Granted By: Joseph Shuldiner, Assistant Secretary.

Date Granted: December 22, 1993.

Reason Waived: To allow additional subsidy for units approved for non-dwelling use to promote economic self-sufficiency services and anti-drug programs pending publication of a final rule implementing this change to the regulation.

19. Regulation: 24 CFR 990.104.

Project/Activity: Texarkana Housing Authority, AR. In determining the operating subsidy eligibility, a request was made for funding for one unit approved for an anti-drug program.

Nature of Requirement: The operating subsidy calculation excludes funding for units removed from the dwelling rental inventory.

Granted By: Joseph Shuldiner, Assistant Secretary.

Date Granted: December 28, 1993.

Reason Waived: To allow additional subsidy for units approved for non-dwelling use to promote economic self-sufficiency services and anti-drug programs pending publication of a final rule implementing this change to the regulation.

20. Regulation: 24 CFR 990.104.

Project/Activity: Fort Worth Housing Authority, TX. In determining the operating subsidy eligibility, a request was made for funding for one unit approved for anti-drug programs.

Nature of Requirement: The operating subsidy calculation excludes funding for units removed from the dwelling rental inventory.

Granted By: Joseph Shuldiner, Assistant Secretary.

Date Granted: December 28, 1993.

Reason Waived: To allow additional subsidy for units approved for non-dwelling use to promote economic self-sufficiency services and anti-drug programs pending publication of a final rule implementing this change to the regulation.

Note to Reader: The person to be contacted for additional information about these waivers is:

Gary Van Buskirk, Director, Homeownership Division, Office of Resident Initiatives, Department of Housing and Urban Development, 451 Seventh Street, SW., Room 4112, Washington, DC 20410, Phone: (202) 708–4233 (This is not a toll-free number)

21. Regulation: 24 CFR 904 Subpart B (Turnkey III Homeownership Opportunity Program) and Corresponding Provisions of the Turnkey III Handbook (7495.3).

Project/Activity: Dayton, Ohio Metropolitan Housing Authority, Turnkey III Homeownership Opportunity Programs Projects OH5–22, 5–25, 5–27, 5–29, 5–30A, 5–30B, and 5–33.

Nature of Requirement: 24 CFR 904 Subpart B and the Turnkey III Handbook require that upon sale of a homeownership unit that the monies received be remitted to HUD to reduce the capital indebtedness on the project. Excess Residual Receipts and or Operating Reserves are also to be remitted to HUD.

Granted By: Joseph Shuldiner, Assistant Secretary for Public and Indian Housing.

Date Granted: October 20, 1993.

Reason Waived: Project debt forgiveness was authorized by the provisions of Section 3004 of the Housing and Community Development Reconciliation. Amendments of 1985, (the Amendments) P.L. 99–272 (April 7, 1986) which amends Section 4 of the United States Housing Act of 1937. The Amendments authorized the Secretary of HUD to forgive outstanding principal and interest on loans made by the Secretary to Public Housing Agencies (PHAs)/Indian Housing Authorities (IHAs) and to cancel the terms of any contract with respect to repayment.

Turnkey III debt forgiveness, as authorized above, is implemented according to existing HUD procedures.

The housing authority has shown good cause and demonstrated compliance with all applicable regulatory requirements for debt forgiveness.

22. Regulation: 24 CFR 904 Subpart B (Turnkey III Homeownership Opportunity Program) and Corresponding Provisions of the Turnkey III Handbook (7495.3).

Project/Activity: Gilbert, Minnesota Housing and Redevelopment Authority, Turnkey III Homeownership Opportunity Programs Project MN 117001.

Nature of Requirement: 24 CFR 904 Subpart B and the Turnkey III Handbook require that upon sale of a homeownership unit that the monies received be remitted to HUD to reduce the capital indebtedness on the project. Excess Residual Receipts and or Operating Reserves are also to be remitted to HUD.

Granted By: Joseph Shuldiner, Assistant Secretary for Public and Indian Housing.

Date Granted: October 20, 1993.

Reason Waived: Project debt forgiveness was authorized by the provisions of Section 3004 of the Housing and Community Development Reconciliation Amendments of 1985, (the Amendments) P.L. 99–272 (April 7, 1986) which amends Section 4 of the United States Housing Act of 1937. The Amendments authorized the Secretary of HUD to forgive outstanding principal and interest on loans made by the Secretary to Public Housing Agencies (PHAs)/Indian Housing Authorities (IHAs) and to cancel the terms of any contract with respect to repayment.

Turnkey III debt forgiveness, as authorized above, is implemented according to existing HUD procedures.

The housing authority has shown good cause and demonstrated compliance with all applicable regulatory requirements for debt forgiveness.

23. Regulation: 24 CFR 904 Subpart B (Turnkey III Homeownership Opportunity Program) and Corresponding Provisions of the Turnkey III Handbook (7495.3).

Project/Activity: Saint Paul, Minnesota Public Housing Agency, Turnkey III Homeownership Opportunity Programs Projects MN 01–21 and MN 01–25.

Nature of Requirement: 24 CFR 904 Subpart B and the Turnkey III Handbook require that upon sale of a homeownership unit that the monies received be remitted to HUD to reduce the capital indebtedness on the project. Excess Residual Receipts and or Operating Reserves are also to be remitted to HUD.

Granted By: Joseph Shuldiner, Assistant Secretary for Public and Indian Housing.

Date Granted: October 20, 1993.

Reason Waived: Project debt forgiveness was authorized by the provisions of Section 3004 of the Housing and Community Development Reconciliation Amendments of 1985, (the Amendments) P.L. 99–272 (April 7, 1986) which amends Section 4 of the United States Housing Act of 1937. The Amendments authorized the Secretary of HUD to forgive outstanding principal and interest on loans made by the Secretary to Public Housing Agencies (PHAs)/Indian Housing Authorities (IHAs) and to cancel the terms of any contract with respect to repayment.

Turnkey III debt forgiveness, as authorized above, is implemented according to existing HUD procedures.

The housing authority has shown good cause and demonstrated compliance with all applicable regulatory requirements for debt forgiveness.

Note to Reader: The person to be contacted for additional information about these waivers is:

Anthony P. DeVito, Field Coordination Officer, Department of Housing and Urban Development, Officer of Community Planning and Development, 451 7th Street, SW., Washington, DC 20410–7000, Telephone: (202) 708–2565 (This is not a toll-free number)

24. Regulation: 24 CFR 291.400.

Project/Activity: Anoka County, Minneapolis requested a waiver of the disposition rules for HUD-acquired one-to four-family properties which restrict occupancy by a homeless lessee in transition to a maximum of 24 months.

Nature of Requirement: The purpose of the program described in 24 CFR 291.400 is to assist individuals and families who are homeless by providing them with transitional housing. Use of HUD-acquired properties by lessees must be with the understanding that the housing provided under this program is transitional and the occupants are expected to seek and obtain permanent housing resources within two years.

Granted By: Jacquie M. Lawing, Deputy Assistant Secretary for Economic Development.

Date Granted: June 11, 1993.

Reasons Waived: The waiver was granted for good cause to facilitate a planned move of a tenant from transitional to permanent housing. An extension of 12 months was granted to allow time for implementation of the permanent housing plan, with a review at the six months point to ensure the permanent housing plan was on track.

25. Regulation: 24 CFR 92.218(a).

Project/Activity: City of Los Angeles request for waiver of matching funds contribution for the HOME Program due to a local disaster.

Nature of Requirement: Section 220(d)(5) of the Cranston-Gonzalez National Affordable Housing Act was added by Section 210(c) of the Housing and Community Development Act of 1992. Section 220(d)(5) authorizes the Secretary to reduce a participating jurisdiction's matching requirement for the HOME Program by up to 100 percent for a fiscal year if the jurisdiction is in an area in which a declaration of a disaster pursuant to the Robert T. Stafford Disaster Relief and Emergency Assistance Act (the Stafford Act) is in effect for any part of the fiscal year.

Granted By: Mark C. Gordon, Deputy Assistant Secretary for Operations.

Date Granted: June 30, 1993.

Reasons Waived: The Department previously responded to the waiver request in a January 19, 1993, letter to Mayor Bradley and indicated that the requested waiver could not be granted until the Department had issued regulations implementing the provision. An interim rule for the HOME Program, which included this provision, was published June 23, 1993; this rule became effective July 23, 1993. The Department has a copy of former President Bush's declaration under the Stafford Act that a major disaster exists in the City of Los Angeles and Los Angeles County.

Pursuant to the authority at 24 CFR 92.3 and 92.222(b), there is good cause to grant the requested waiver of 24 CFR 92.218(a) and to reduce the matching requirement for the City of Los Angeles, California's HOME Program by 100 percent for Fiscal Years 1993 and 1994.

26. Regulation: 24 CFR 570.303(f).

Project/Activity: Saginaw, Michigan requested a waiver to permit the City to change the period to meet the primary objective of the CDBG program to benefit low and moderate income persons.

Nature of Requirement: 24 CFR 570.303(f) requires each grantee to expend at least 70 percent of its CDBG funds for activities that benefit low- and moderate-income persons. To comply with this requirement, 24 CFR 570.303(f) provides that each CDBG grantee must certify that it will achieve the primary objective during a period of one, two or three consecutive program years. Each grantee is permitted to identify the period it will use for this purpose.

Granted By: Andrew Cuomo, Assistant Secretary for Community Planning and Development.

Date Granted: July 8, 1993.

Reasons Waived: The City of Saginaw has typically identified a one-year period during which it will meet the primary objective of the CDBG program. However, because the City plans to undertake a large project that will meet the national objective of prevention or elimination of slums or blight, it has found that it will not be able to meet the primary objective in a one-year period. Therefore, it has requested a waiver to extend the period of its certification to a three-year period beginning with its 1992 program year.

The City has indicated that if its request for a waiver is not granted, it would have to

curtail slum/blight activity to rehabilitate a parking garage located in the downtown business district. Use of the garage is now restricted because of its need for rehabilitation to correct deterioration and corrosion. The City has indicated that it does not have other resources available to rehabilitate this structure and failure to complete the rehabilitation would result in the loss of business (and the jobs provided by those businesses) if parking is not made available for business customers. The City requested that a waiver be authorized to cover its 1992 program year but a waiver cannot be granted retroactively; therefore, the request was denied.

Clearly the potential loss of businesses and jobs in downtown Saginaw would constitute an undue hardship and adversely affect the purposes of the Act. A waiver was granted for the City to amend the certification required by 24 CFR 570.303(f) in its 1993 final statement to include its 1993, 1994, and 1995 program years.

27. Regulation: 24 CFR 291.415.

Project/Activity: Phoenix Arizona. Request to waive the 24 month Maximum Period of Occupant Tenancy in the Single Family Property Disposition Homeless Initiative for five families in five properties.

Nature of Requirement: The purpose of the program is to assist families who are homeless by providing them with transitional housing. Use of HUD-acquired properties by lessees must be with the understanding that the housing provided under this program is transitional and the occupants are expected to seek and obtain permanent housing resources within two years.

Granted By: Andrew Cuomo, Assistant Secretary for Community Planning and Development.

Date Granted: August 5, 1993.

Reasons Waived: The need to find stable permanent housing in Phoenix will require more time, therefore, for good cause a lease extension was approved for 12 months for four families and 6 months for one family.

28. Regulation: 24 CFR 92.256.

Project/Activity: Elizabeth, New Jersey request for an waiver of the HOME Investment Partnership Program (HOME) regulation for a project located in that city. The cited regulation requires that in a mixed-use project, at least 51 percent of the project space must be used for residential purposes.

Nature of Requirement: The requirement that a minimum of 51 percent of the space in mixed-use projects be for residential purposes was meant to help ensure that the primary HOME Program goal of creation of affordable housing is met. However, it is also recognized that there are instances in which it would be appropriate to allow a project containing a lower percentage to be included. This is particularly true when the project is a part of a larger overall plan.

Granted By: Andrew Cuomo, Assistant Secretary for Community Planning and Development.

Date Granted: August 20, 1993.

Reasons Waived: The project for which the waiver is being sought is not an isolated project, but one that is located in a neighborhood revitalization area. This area contains several other, proximately located, residential projects that are being included in the revitalization effort. Further, the commercial space in the subject project is reportedly typical of normal, neighborhood-based enterprises that would support the economic and residential viability of the area.

24 CFR 92.3 provides that the Department of Housing and Urban Development may waive, for good cause, any provision of the regulation that is not required by the statue. The circumstances outlined in the request from the City of Elizabeth, New Jersey constitute good cause. Therefore, the regulation regarding the minimum residential living space requirement in a mixed-use project was waived to allow HOME funds to be used in the project located at 17—174 First Street, Elizabeth, New Jersey 07206, which is comprised of no less than 36 percent residential living space.

29. Regulation: 24 CFR 570.507(a)(2)(A) & 24 CFR 570.5.

Project/Activity: The City of Los Angeles, California, request for a waiver of the submission deadline for the Community Development Block Grant Program (CDBG) Grantee Performance Report (GPR) to allow it to complete conversion to HUD's new automated GPR system.

Nature of Requirement: The GPR is an important part of HUD's process of monitoring the CDBG program and of informing the City's citizens about program performance.

CDBG regulations allow a waiver of any requirement not required by law whenever it is determined that undue hardship will result from applying the requirement and where application of the requirement would adversely affect the purpose of the Housing and Community Development Act of 1974, as amended.

Granted By: Andrew Cuomo, Assistant Secretary for Community Planning & Development.

Date Granted: September 3, 1993.

Reasons Waived: The City has cooperated with the Department in reviewing and deciding to change management practices or administrative procedures that prevent it from complying with program requirements. It will clearly be in the best interest of the City, the Department, and of those served by the CDBG program if, at the earliest possible time, the City develops the capacity to produce timely and accurate reports.

For the above reasons, failure to grant a waiver of the regulation would cause undue hardship and adversely affect the purposes of the Act. Therefore, the deadline was waived to allow the City to submit its GPR as late as December 22, 1993.

30. Regulation: 24 CFR 576.55(b)(1).

Project/Activities: Waiver of the Emergency Shelter Grants (ESG) Program Deadline for the City of St. Louis to Obligate FY 1993 ESG funds.

Nature of the Requirement: The regulations state that the formula cities, counties, and territories have 180 days from the time of grant award by HUD to obligate ESG funds. To meet this deadline, these grantees, according to the definition of obligation as stated at 24 CFR 576.3 must have "placed orders, awarded contracts, received services, or entered transactions that require payment from the grant amount."

Granted By: Andrew Cuomo, Assistant Secretary for Community Planning and Development.

Date Granted: October 7, 1993.

Reason Waived: The City of St. Louis's FY 1993 ESG funds were not obligated by the September 1, 1993 deadline due to the City's Department of Human Services' (DHS) extensive involvement in flood relief efforts.

The ESG Program regulations at 24 CFR 576.5 provided that the Secretary may waive any requirement of the regulations that is not required by law, whenever undue hardship will result from applying the requirement, or where application of the requirement would adversely affect the purposes of the program. Due to the City's need to address the extraordinary consequences of the flood and the need for flood relief, failure to grant this extension would cause undue hardship for the city of St. Louis and would adversely affect the purposes of Title IV of the Stewart B. McKinney Homeless Assistance Act, since the City of St. Louis would not otherwise receive its ESG allocation. Therefore, the regulations concerning the 180-day obligation deadline were waived and the obligation deadline extended until October 31, 1993.

[FR Doc. 94–11899 Filed 5–16–94; 8:45 am]

BILLING CODE 4210–32–M

DEPARTMENT OF THE INTERIOR

National Park Service

Salt River Bay National Historical Park and Ecological Preserve at St. Croix, Virginia Islands Commission

AGENCY: National Park Service, Interior.

ACTION: Notice of Advisory Commission Meeting.

SUMMARY: Notice is hereby given in accordance with the Federal Advisory Committee Act that a meeting of the Salt River Bay National Historical Park and Ecological Preserve at St. Croxi, Virgin Islands Commission will be held at 9 a.m. to 4 p.m., at the following location and date.

DATES: May 25, 1994.

LOCATION: Department of Education's Curriculum Center, Kingshill, St. Croix, Virgin Islands 00850.

FOR FURTHER INFORMATION CONTACT: Francis Peltier, Superintendent, Virgin Islands National Park, 6310 Estate Nazareth, St. Thomas, U.S. Virgin Islands 00802.

SUPPLEMENTARY INFORMATION: The purpose of the Salt River Bay National Historical Park and Ecological Preserve at St. Croix, Virgin Islands Advisory Commission is to make recommendations on how all lands and waters within the boundaries of the park

can be jointly managed by the Governments of the United States Virgin Islands and the United States in accordance with Public Law 102–247; to consult with the Secretary of the Interior on the development of the general management plan required by section 105 of Public Law 102–247; and to provide advice and recommendations to the Government of the United States Virgin Island upon request of the Government of the United States Virgin Islands.

Matters to be discussed at this meeting include the budget for the Commission; land protection plan for the park; concurrent jurisdiction; "March for Parks", and administrative items.

This meeting will be open to the public. However, facilities and space for accommodating members of the public are limited. Any member of the public must also file with the commission a written statement concerning the matters to be discussed. Written statements may also be submitted to the Superintendent at the address above at least ten (10) working days prior to the meeting.

Members of the public may request ahead of time to address the commission. Comments will be limited to 5 minutes. Written copies of comments must be submitted to the commission in order to be included in the official record of the meeting. Minutes of the meeting will be available at the Virgin Islands National Park headquarters at the above address for public inspection approximately four (4) weeks after the meeting.

Dated: May 5, 1994.

C.W. Ogle,

Acting Regional Director, Southeast Region.

[FR Doc. 94–11976 Filed 5–16–94; 8:45 am]

BILLING CODE 4310–70–M

Denali National Park Subsistence Resource Commission

AGENCY: National Park Service, Interior.

ACTION: Subsistance Resource Commission meeting.

SUMMARY: The Superintendent of Denali National Park and the Chairperson of the Subsistence Resource Commission for Denali National Park announce a forthcoming meeting of the Denali National Park Subsistence Resource Commission.

The following agenda items will be discussed.

(1) Introduction of Commission members and guests.
(2) Superintendent's welcome.
(3) Old business:
  a. Approval of summary of minutes.
  b. Review of SRC function and purpose.
(4) Federal Subsistence Management Program update:
  a. Federal Subsistence Board actions.
  b. Customary and traditional determination issues related to the Parks Highway.
  c. Federal Regional Advisory Council actions.
  d. Recommended alternative moose season, Unit 20(C).
  e. Federal subsistence jurisdiction.
(5) New business:
  a. Establishment of resident zone community boundaries for Nikolai and Telida.
  b. McGrath Road presentation by Alaska State Department of Transportation.
  c. Discussion of Ahtna land selection in Denali National Park.
(6) Public and other agency comments.
(7) Set time and place of next SRC meeting.
(8) Adjournment.

DATES: The meeting will be held on Wednesday, June 8, 1994. The meeting will begin at 10 a.m. and conclude around 5 p.m..

LOCATION: The meeting will be held at the Cantwell Community Center in Cantwell, Alaska.

FOR FURTHER INFORMATION CONTACT: Russell Berry, Superintendent, PO Box 9, Denali Park, Alaska 99755. Phone (907) 683–2294.

SUPPLEMENTARY INFORMATION: The Subsistence Resource Commissions are authorized under Title VIII, Section 808, of the Alaska National Interest Lands Conservation Act, Public Law 96–487, and operate in accordance with the provisions of the Federal Advisory Committees Act.

John M. Morehead,

Regional Director.

[FR Doc. 94–11975 Filed 5–16–94; 8:45 am]

BILLING CODE 4310–70–M

National Register of Historic places; Notification of Pending Nominations

Nominations for the following properties being considered for listing in the National Register were received by the National Park Service before May 7, 1994. Pursuant to § 60.13 of 36 CFR part 60 written comments concerning the significance of these properties under the National Register criteria for evaluation may be forwarded to the National Register, National Park Service, P.O. Box 37127, Washington, DC 20013–7127. Written comments should be submitted by June 1, 1994.

Beth M. Boland,

Acting Chief of Registration, National Register.

CONNECTICUT

Middlesex County

Working Girl's Vacation Society Historic District 60, 64 and 66 Mill Rd., East Haddam, 94000557

FLORIDA

Indian River County

Gregory, Judge Henry F., House, 2179 10th Ave., Vero Beach, 94000540

Orange County

Windermere Town Hall, 520 Main St., Windermere, 94000539

GEORGIA

Colquitt County

Multrie Commercial Historic District, Roughly bounded by NE, First Ave., SE, Second Ave., W. First St. and E. Fourth St., Multrie, 94000543

MASSACHUSETTS

Berkshire County

Williamstown Rail Yard and Station Historic District, Jct. of Cole Ave. and N. Hoosac Rd., Williamstown. 94000544

Middlesex County

Shell Oil Company "Spectacular" Sign, 187 Magazine St., Cambridge, 94000546
Halden Street Cattle Pass (Cambridge MRA), Adjacent to MBTA right-of-way at Walden St., Cambridge, 94000554

MISSISSIPPI

Clarke County

House at 200 East Franklin Street (Clarke County MPS), 200 E. Franklin St., Ouitman, 94000538

NEVADA

Clark County

Green Shack, 2504 E. Fremont, Las Vegas, 94000552

Washoe County

Cal-Vada Lodge Hotel, Jct. of Stateline Rd. and NV 28. Crystal Bay, 94000551

Carson City Independent City

Dat So La Lee House, 331 W. Proctor St., Carson City, 94000553

NEW YORK

Schoharie County

Sharon Springs Historic District, Jct. of NY 10 and US 20, Sharon Springs, 94000541

NORTH CAROLINA

Halifax County

Parker, James H., House, 307 W. Franklin St., Enfield, 94000545

Lenior County

Kingston commercial

Historic District (Boundary Increase) (Kingston MPS), Roughly bounded by E. Blount, W. Blount, N. Herritage, W. North and N. Queen Sts., Kinston, 94000569

Orange County

Old Chapel Hill Cemetery, Jct. of NC 54 and County Club Rd., NW corner, Chapel Hill, 94000570

NORTH DAKOTA

Grand Forks County

Dinnie Apartments, 102–108 Fourth Ave. S. Grands Forks, 94000555

Walsh County

St. Joseph's Chapel, Between I–29 and the Red R., E of Minto, Pulaski Township, Minto vicinity, 94000556

SOUTH DAKOTA

Brookings County

Brookings Central Residential Historic District, Roughly bounded by Third St., Sixth St. (SD 14), Medary Ave. and Fifth Ave., Brookings, 94000558

Graham House, 927 7th St., Brookings, 94000559

Davison County

Koch Flats, 203 W. 2nd Ave., Mitchell, 94000561

Koch, William, House, 201 W. 2nd St., Mitchell, 94000566

Whittier School, 209 W. Second Ave., Mitchell, 94000562

Day County

Waddel Mansion, 605 W. 5th St., Webster, 94000564

Douglas County

Delmont Public School, 205 W. Third, Delmont, 94000560

Jackson County

Triangle Ranch, On the S fork of the Bad R., about 11 miles SW of Philip, Philip vicinity, 94000563

Pennington County

McEachron, C.E., General Merchandise, 349 Main St., Hill City, 94000565

Sanborn County

St. Scholastica Catholic Church, W side of Fourth St., between Wisconsin and State Sts., Letcher, 94000567

St. Scholastica Rectory, W side of Fourth St., between Wisconsin and State Sts., Letcher, 94000568

TEXAS

Tarrant County

Sanger Brothers Building, 410–412 Houston St., Fort Worth, 94000542

VIRGINIA

King and Queen County

Fort Mattapony, Address restricted, Walkerton vicinity, 94000547

Loudoun County

Ebenezer Baptist Churches, Jct. of VA 719 and VA 779, NW corner, Bloomfield vicinity, 94000548,

Louisa County

Cuckoo, Jct. of US 33 and VA 522 S, Mineral vicinity, 94000550

Montgomery County

Currie House, 1105 Highland Cir., Blacksburg, 94000549

[FR Doc. 94–11974 Filed 5–16–94; 8:45 am]

BILLING CODE 4310–70–F

DEPARTMENT OF JUSTICE

Drug Enforcement Administration

Importation of Controlled Substances—Notice of Application

Pursuant to section 1008 of the Controlled Substances Import and Export Act (21 U.S.C. 958(i)), the Attorney General shall, prior to issuing a registration under the section to a bulk manufacturer of a controlled substance in Schedule I or II and prior to issuing a regulation under section 1002(a) authorizing the importation of such a substance, provide manufacturers holding registrations for the bulk manufacture of the substance an opportunity for a hearing.

Therefore, in accordance with § 1311.42 of Title 21, Code of Federal Regulations (CFR), notice is hereby given that on April 15, 1994, Research Biochemicals, Limited Partnership, One Strathmore Road, Natick, Massachusetts 01760, made application to the Drug Enforcement Administration to be registered as an importer of the basic classes of controlled substances listed below:

Drug	Schedule
Methaqualone (2565)	I
Ibnogaine (7260)	I
Tetrahydrocannabinols (7370)	I
Bufotenine (7433)	I
Dimethyltryptamine (7435)	I
Ethorphine (except HCl) (9056)	I
Methylphenidate (1724)	II
Etorphine Hydrochloride (9059)	II
Diphenoxylate (9170)	II
Metazocine (9240)	II
Methadone (9250)	II
Dextropropoxyphene, bulk (non-dosage forms) (9273).	II
Fentanyl (9801)	II

The firms imports small amounts of controlled substances for manufacturing into non-human reference standards.

Any manufacture holding, or applying for, registration as a bulk manufacturer of this basic class of controlled substance may file written comments on or objections to the application described above and may, at the same time, file a written request for a hearing on such application in accordance with 21 CFR 1301.54 in such form as prescribed by 21 CFR 1316.47.

Any such comments, objections, or requests for a hearing may be addressed to the Deputy Assistant Administrator, Office of Diversion Control, Drug Enforcement Administration, United States Department of Justice, Washington, DC 20537, Attention: DEA Federal Register Representative (CCR), and must be filed no later than (30 days from publication).

This procedure is to be conducted simultaneously with and independent of the procedures described in 21 CFR 1311.42 (b), (c), (d), (e), and (f). As noted in a previous notice at 40 FR 43745–46 (September 23, 1975), all applicants for registration to import a basic class of any controlled substance in Schedule I or II are and will continue to be required to demonstrate to the Deputy Assistant Administrator, Office of Diversion Control, Drug Enforcement Administration that the requirements for such registration pursuant to 21 U.S.C. 958(a), 21 U.S.C. 823(a), and 21 CFR 1311.42 (a), (b), (c), (d) (e), and (f) are satisfied.

Dated: May 11, 1994.

Gene R. Haislip,

Deputy Assistant Administrator, Office of Diversion Control Drug Enforcement Administration.

[FR Doc. 94–11922 Filed 5–16–94; 8:45 am]

BILLING CODE 4410–09–M

DEPARTMENT OF LABOR

Office of the Secretary

Glas Ceiling Commission; Open Meeting: Change in Time and Location; Notice of Partially Closed Meeting

SUMMARY: Pursuant to Title II of the Civil Rights Act of 1991 (Pub. L. 102–166) and section 9 of the Federal Advisory Committee Act (FACA) (Pub. L. 92–462, 5 U.S.C. app. II) a Notice of establishment of the Glass Ceiling Commission was published in the **Federal Register** on March 30, 1992 (57 FR 10776). Pursuant to section 10(a) of FACA, this is to announce a meeting of the Commission which is to take place on Thursday, June 23, 1994. This meeting was previously published in the **Federal Register** on April 15, 1994 at 59 FR 18155. The purpose of the Commission is to, among other things, focus greater attention on the importance of eliminating artificial barriers to the advancement of

minorities and women to management and decisionmaking positions in business. The Commission has the practical task of: (a) Conducting basic research into practices, policies, and manner in which management and decisionmaking positions in business are filled; (b) conducting comparative research of businesses and industries in which minorities and women are promoted or are not promoted; and (c) recommending measures to enhance opportunities for and the elimination of artificial barriers to the advancement of minorities and women to management and decisionmaking positions.

Time and Place; Closed Portion Of The Meeting: The meeting will be held on Thursday, June 23, 1994. There will be a closed portion of the meeting from 11 to Noon, at which time the Commission will recess for lunch. The public meeting will be from 1 p.m. until 5 p.m. at the Association Of The Bar Of The City Of New York, 42 West 44th Street, New York, NY 10036.

The Commission will meet in closed session in order to discuss internal personnel and personal issues. The closing of this portion of the meeting is authorized by section 10(d) of the Federal Advisory Committee Act and section (c)(6) of the Government in the Sunshine Act. This closing allows the Commission to discuss matters which if disclosed in an open meeting could constitute a clearly unwarranted invasion of personal privacy.

This new schedule changes the information published on April 15, 1994.

Agenda: The agenda for the public meeting is as follows:

Discussion of Future Hearings
Review of Hearing Materials
Discussion of Research
Discussion of Perkins-Dole Award

Public Participation: The meeting from 1 to 5 p.m. will be open to the public. Seating will be available on a first-come, first-served basis. Seats will be reserved for the media. Disabled individuals should contact the Commission no later than June 10, 1994, if special accommodations are needed. Individuals or organizations wishing to submit written statements should send twenty (20) copies to the Glass Ceiling Commission, U.S. Department of Labor, 200 Constitution Avenue, NW., room C–2313, Washington, DC 20210.

FOR FURTHER INFORMATION CONTACT: Glass Ceiling Commission, U.S. Department of Labor, 200 Constitution Avenue, NW., room C–2313, Washington, DC 10210, (202) 219–7342.

Signed at Washington, DC this 12th day of May, 1994.

Robert B. Reich,

Secretary of Labor.

[FR Doc. 94–11953 Filed 5–16–94; 8:45 am]

BILLING CODE 4510–23–M

Glass Ceiling Commission; Open Site Hearing; Change in Time

SUMMARY: Pursuant to Title II of the Civil Rights Act of 1991 (Pub. L. 102–166) and section 9 of the Federal Advisory Committee Act (FACA) (Pub. L. 92–462, 5 U.S.C. app. II) a Notice of establishment of the Glass Ceiling Commission was published in the **Federal Register** on March 30, 1992 (57 FR 10776). Pursuant to section 10(a) of FACA, this is to announce a public hearing of the Commission which is to take place on Friday, June 24, 1994. Notice of this hearing was previously published in the **Federal Register** on April 15, 1994 at 59FR 18155. The purpose of the Commission is to, among other things, focus greater attention on the importance of eliminating artificial barriers to the advancement of minorities and women to management and decisionmaking positions in business. The Commission has the practical task of: (a) Conducting basic research into practices, policies, and manner in which management and decisionmaking positions in business are filled; (b) conducting comparative research of businesses and industries in which minorities and women are promoted or are not promoted to management and decisionmaking positions; and (c) recommending measures designed to enhance opportunities for and the elimination of artificial barriers to the advancement of minorities and women to management and decisionmaking positions.

Time and Place: The hearing will be held on Friday, June 24, 1994 from 9 a.m. until 5 p.m. in the Meeting Hall at the Association Of The Bar Of The City Of New York, 42 West 44th Street, New York, NY 10036. This shortens the meeting time from 6 p.m. to 5 p.m.

Agenda: The agenda for the hearing is as follows:

9 a.m.—Opening Remarks by Secretary Reich
9:30—Welcoming Remarks by Federally Elected Officials
9:45–12:30—Witnesses
12:30–1:45—Lunch break
2–4:30—Witnesses
4:30–5 p.m.—Open public session.

Public Participation

The hearing will be open to the public. Seating will be available on a first-come, first-serve basis. Seats will be reserved for the media. Disabled individuals should contact the Commission no later than June 10, 1994, if special accommodations are needed.

Individuals or organizations wishing to testify orally must provide written testimony in advance of the hearing. Send twenty (20) copies of testimony, postmarked on or before June 10, 1994, to the: Glass Ceiling Commission, U.S. Department of Labor, 200 Constitution Avenue, NW., Room C–2313, Washington, DC 20210.

The written testimony must contain the following information:

(1) The name, address, and telephone number of each person to appear;

(2) The capacity in which the person will appear;

(3) Oral comments are limited to 7 minutes, written testimony may be longer.

(4) The issues that will be addressed.

(5) Twenty (20) copies of testimony. (Testimony may be longer in length than oral comments.)

This information is needed to properly develop a hearing schedule. As many people as time allows will be permitted to testify. To provide all interested parties an opportunity to present their views in the public hearing, and answer questions from Commissioners.

Issues

Testimony should highlight successful initiatives and/or recommendations for addressing the areas discussed below. The Commission is especially interested in hearing about procedures, practices and systems that have been put in place to make sure that goals are achieved in work force diversity.

Recruitment: What systems are in place to ensure that external recruiting for decisionmaking positions will produce a pool of applicants which includes minorities and women? Similarly, does the process for considering promotion of current employees to decisionmaking positions ensure consideration of minorities and women?

Developmental practices and credential building experiences: How are minorities and women ensured that they will be given the kinds of experiences that will make them competitive for decisionmaking positions, including not only advanced education, but also developmental assignments such as to corporate committees and task forces, special projects, etc.

Accountability for equal employment opportunity responsibilities: How are

senior level executives, line managers, and corporate decision makers held accountable for EEO responsibilities?

Compensation systems: How is the total compensation package including bonuses, stock options and other incentives evaluated for fairness for minorities and women? How is the appraisal system/performance rating system protected from subjective decisions which impact compensation? Do management and supervisory compensation systems depend upon or reward managers' achieving work force diversity goals, and, if so, how does that work?

Placement patterns: What kind of monitoring is done to ensure that minorities and women are placed in the line positions that will provide better opportunity for promotion to decisionmaking positions?

Testimony on successful initiatives may include discussion of the elements above and how other factors are combined to create a complete initiative resulting in the advancement of minorities and women.

A videotape may be made of the hearing. A transcript of the hearing will be made.

Materials submitted at this hearing should not have been submitted at any previous or subsequent Glass Ceiling Commission hearings.

Those individuals or organizations wishing to submit written statements, but not testify orally, should send twenty (20) copies to the Glass Ceiling Commission, U.S. Department of Labor, 200 Constitution Avenue, N.W., room C–2313, Washington, DC 20210. Written statements should be postmarked on or before June 10, 1994.

FOR FURTHER INFORMATION CONTACT: Glass Ceiling Commission, U.S. Department of Labor, 200 Constitution Avenue., NW., room C–2313, Washington, DC 20210, (202) 219–7342.

Signed at Washington, DC this 12th day of May, 1994.

Robert B. Reich,

Secretary of Labor.

[FR Doc. 94–11954 Filed 5–16–94; 8:45 am]

BILLING CODE 4510–23–M

Employment and Training Administration

Advisory Council on Unemployment Compensation; Notice of Hearing

SUMMARY: The Advisory Council on Unemployment Compensation was established in accordance with the provisions of the Federal Advisory Committee Act on January 24, 1992 (57 FR 4067). Public Law 102–164, the Emergency Unemployment Compensation Act of 1991, mandated the establishment of the Council to evaluate the overall unemployment insurance program, including the purpose, goals, counter-cyclical effectiveness, coverage, benefit adequacy, trust fund solvency, funding of State administrative costs, administrative efficiency, and other aspects of the program, and to make recommendations for improvement.

Time and Place

A hearing will be held from 2 p.m. to 4 p.m. on June 16, 1994 and from 2 p.m. to 4 p.m. on June 17, 1994 at the Holiday Inn by the Bay, 88 Spring Street, Portland, Maine.

Public Participation

The hearing will be open to the public. Seating will be available to the public on a first-come, first-served basis. Seats will be reserved for the media. Handicapped individuals should contact the Designated Federal Official (DFO), listed below, if special accommodations are needed.

Submitting Written Statements

Individuals or organizations wishing to submit written statements should send fifteen (15) copies to Esther R. Johnson, DFO, Advisory Council on Unemployment Compensation, U.S. Department of Labor, 200 Constitution Avenue, NW., room S–4231, Washington, DC 20210. Statements must be received not later than May 27, 1994.

Presenting Oral Statements

Individuals or organizations wishing to present oral statements should send a written request to Ellen S. Calhoun, Advisory Council on Unemployment Compensation, U.S. Department of Labor, 200 Constitution Avenue, NW., room S–4206, Washington, DC 20210. Requests for presenting oral statements should indicate a daytime phone number. Time slots will be assigned on a first-come, first-served basis. All such requests must be received not later than May 27, 1994.

FOR ADDITIONAL INFORMATION CONTACT: Esther R. Johnson, DFO, Advisory Council on Unemployment Compensation, U.S. Department of Labor, 200 Constitution Avenue, NW., room S–4231, Washington, DC 20210. She may be reached at (202) 219–7831 (this is not a toll-free number).

Signed at Washington, DC., this 11th day of May 1994.

Doug Ross,

Assistant Secretary of Labor.

[FR Doc. 94–11952 Filed 5–16–94; 8:45 am]

BILLING CODE 4510–30–M

Advisory Council on Unemployment Compensation; Meeting

Summary: The Advisory Council on Unemployment Compensation was established in accordance with the provisions of the Federal Advisory Committee Act on January 24, 1992 (57 FR 4067). Public Law 102–164, the Emergency Unemployment Compensation Act of 1991, mandated the establishment of the Council to evaluate the overall unemployment insurance program, including the purpose, goals, counter-cyclical effectiveness, coverage, benefit adequacy, trust fund solvency, funding of State administrative costs, administrative efficiency, and other aspects of the program, and to make recommendations for improvement.

Time and Place: A meeting will be held from 9 a.m. to 2 p.m. on June 16, 1994 and from 9 a.m. to 2 p.m. on June 17, 1994 at the Holiday by the Bay, 88 Spring Street, Portland, Maine.

Agenda: The agenda for the meeting is as follows:

1. Discussion of the fundamental purpose(s) of the U.S. unemployment insurance (UI) system;

2. Discussion of the division of responsibilities for the UI program between the Federal and State partners;

3. Discussion of the Administrative Financing Initiative;

4. Discussion of specific aspects of the funding mechanism for the UI program; and,

5. Discussion of UI coverage of agricultural workers.

Public Participation: The meeting will be open to the public. Seating will be available to the public on a first-come, first-served basis. Seats will be reserved for the media. Handicapped individuals should contact the Designated Federal Official (DFO), listed below, if special accommodations are needed.

For Additional Information Contact: Esther R. Johnson, DFO, Advisory Council on Unemployment Compensation, U.S. Department of Labor, 200 Constitution Avenue, NW., room S–4231, Washington, DC 20210. She may be reached at (202) 219–7831 (this is not a toll-free number).

Signed at Washington, DC, this 11th day of May 1994.

Doug Ross,

Assistant Secretary of Labor.

[FR Doc. 94–11951 Filed 5–16–94; 8:45 am]

BILLING CODE 4510–30–M

Pension and Welfare Benefits Administration

Deferral of Form 5500 Schedule G Filing Requirement

The purpose of this notice is to announce that the Pension and Welfare Benefits Administration (PWBA) has decided to defer indefinitely the mandatory utilization of the Schedule G of the Form 5500 Annual Return/Report.

The Schedule G was developed to provide uniformity in the reporting of assets held for investment, assets acquired and disposed of during the plan year, reportable transactions, and other information required to be included as part of the Form 5500 Annual Return/Report. Utilization of the Schedule G for reporting such information was optional for the 1992 and 1993 plan years. It was the intention of the PWBA to require utilization of the Schedule G for the 1994 and subsequent plan years. However, the PWBA has since determined that further review of the Schedule G and the information required to be reported thereon is warranted before mandating utilization of the Schedule. For this reason, mandatory utilization of the Schedule G is being deferred until further notice from the PWBA.

Plan administrators are cautioned, however, that while completion of the Schedule G is not mandatory, the information required by that schedule is nonetheless required to be included as part of the Form 5500 and reported in accordance with the applicable instructions to the Form.

FOR FURTHER INFORMATION CONTACT; Eric A. Raps, Office of Regulations and Interpretations, Pension and Welfare Benefits Administration, U.S. Department of Labor, Washington, D.C. 20210, (202) 219–8515 (not a toll free number).

Signed at Washington, DC this 10th day of May, 1994.

E. Olena Berg,

Assistant Secretary, Pension and Welfare Benefits Administration.

[FR Doc. 94–11950 Filed 5–16–94; 8:45 am]

BILLING CODE 4510–29–M

NUCLEAR REGULATORY COMMISSION

Abnormal Occurrence Report, Section; 208 Report Submitted to the Congress

Notice is hereby given that pursuant to the requirements of section 208 of the Energy Reorganization Act of 1974, as amended, the Nuclear Regulatory Commission (NRC) has published and issued another periodic report to Congress on abnormal occurrences (NUREG–0090, Vol. 16, No. 4).

Under the Energy Reorganization Act of 1974, which created NRC, an abnormal occurrence is defined as "an unscheduled incident or event that the Commission (NRC) determines is significant from the standpoint of public health or safety." NRC has made a determination that events involving an actual loss or significant reduction in the degree of protection against radioactive properties of source, special nuclear, and by-product material are abnormal occurrences.

The report to Congress is for the fourth calendar quarter of 1993. The report identifies the occurrences or events that the Commission determined to be significant and reportable; the remedial actions that were undertaken are also described.

This report discusses six abnormal occurrences at NRC-licensed facilities. Five involved medical brachytherapy misadministrations, and one involved an overexposure to a nursing infant. Seven abnormal occurrences that were reported by the Agreement States are also discussed, based on information provided by the Agreement States as of February 28, 1994. Of these events, three involved brachytherapy misadministrations, one involved a teletheraphy misadministration, one involved a theft of radioactive material during transport and improper disposal, and two involved lost sources.

A copy of the report is available for inspection or copying for a fee at the NRC Public Document Room, 2120 L Street NW. (Lower Level), Washington, DC 20555, or at any of the nuclear power plant Location Public Document Rooms throughout the country.

Copies of NUREG–0090, Vol. 16, No. 4 (or any of the previous reports in this series), may be purchased from the Superintendent of Documents, U.S. Government Printing Office, Post Office Box 37082, Washington, DC 20013–7082. A year's subscription to the NUREG–0090 series publication, which consists of four issues, is also available.

Copies of the report may also be purchased from the National Technical Information Service, U.S. Department of Commerce, 5285 Port Royal Road, Springfield, VA 22161.

Dated at Rockville, MD this 11th day of May, 1994.

For the Nuclear Regulatory Commission

John C. Hoyle,

Acting Secretary of the Commission.

[FR Doc. 94–11927 Filed 5–16–94; 8:45 am]

BILLING CODE 1590–01–M

[Docket No. 40–8902]

Atlantic Richfield Company Bluewater Mill

AGENCY: U.S. Nuclear Regulatory Commission.

ACTION: Notice of intent to amend Source Material License SUA–1470 to incorporate a revised design for the radon barrier into the approved tailings reclamation plan, and Notice of Opportunity to request a hearing.

1. *Proposed Action:* By letter dated December 13, 1993, Atlantic Richfield Company requested amendment of Source Material License SUA–1470 to revise the design of the main tailings pile radon barrier for the approved tailings reclamation plan for the Bluewater Mill. The proposed action is to amend the license to incorporate a revised design for the radon barrier.

2. *Basis for Proposed Action:* The NRC staff performed an independent review of the licensee's December 13, 1993, submittal as well as subsequent submittals dated March 2, 10, and 29, 1994. As a result of the review, the staff concludes that the radon barrier thicknesses which the licensee has stated will be achieved in the field will attenuate radon emanation from the reclaimed tailings to less than 20 pCi/m^2/sec, as required by Criterion 6 of Appendix A to 10 CFR 40. The staff therefore concludes that the license should be amended require that the licensee place the radon barrier layer to thicknesses which they have stated will be achieved.

Paragraph 10 CFR 51.22 (c)(11), categorically excludes the requirement for an environmental assessment for this licensing action. That paragraph states that the categorical exclusion applies to the issuance of amendments to licenses for uranium mills provided that (1) there is no significant change in the types or significant increase in the amounts of any effluents that may be released offsite, (2) there is no significant increase in individual or cumulative occupational radiation exposure, (3) there is no significant construction impact, and (4) there is no significant increase in the potential for

or consequences from radiological accidents.

The licensing action discussed in this memorandum involves only modification of the radon barrier design. These changes will not result in adverse environmental impacts. As environmental report is not required from the licensee since the amendment does not meet the criteria of 10 CFR 51.60(b)(2).

3. *Notice of Opportunity To Request Hearing:* In accordance with Title 10, Code of Federal Regulations, Part 2 (10 CFR 2), paragraph 2.1205(c)(1), interested parties are hereby notified that they may request a hearing pursuant to the procedures set forth in 10 CFR 2.1205 within thirty (30) days of the publication of this notice.

Signed in Rockville, Maryland this 5th day of May 1994.

Robert L. Johnson,

Acting Chief, HLUR.

[FR Doc. 94–11928 Filed 5–16–94; 8:45 am]

BILLING CODE 7590–01–M

NUCLEAR REGULATORY COMMISSION

[IA 94–011]

Order Prohibiting Involvement in NRC-Licensed Activities (Effective Immediately)

I

Dr. James Bauer, M.D. (Dr. Bauer) is listed as the Radiation Safety Officer (RSO) and sole authorized user on NRC License No. 37–28179–01 (license) issued to the Indiana Regional Cancer Center (Licensee) located in Indiana, Pennsylvania. Byproduct License No. 37–28179–01 was issued by the Nuclear Regulatory Commission (NRC or Commission) pursuant to 10 CFR parts 30 and 35, and authorizes the Licensee to use a strontium-90 source for the treatment of superficial eye conditions in accordance with the conditions specified therein. The license, originally issued on April 25, 1988, was due to expire on April 30, 1993, but remained in effect, pursuant to 10 CFR 30.37(b), based on a timely request for renewal that was received by the NRC on April 5, 1993. By an Order Modifying and Suspending License (Effective Immediately), issued November 16, 1993, the license was modified to prohibit Dr. Bauer from engaging in activities under the license and to suspend the Licensee's authority to receive and use licensed material.

II

On November 11, 1993, the NRC performed an inspection at the Licensee's facility in Indiana, Pennsylvania. During the inspection, the NRC found that Dr. Bauer had used the Licensee's strontium-90 source to perform treatments of two patients for skin lesions on several occasions between September and November 1993, even though the license does not authorize the use of the strontium-90 for any purpose other than the treatment of superficial eye conditions. Since the use of the strontium-90 source for treatment of skin lesions not involving the eye is not authorized by the license, a violation of the license occurred.

Prior to identifying that violation during the inspection, the inspectors asked Dr. Bauer, as the Radiation Safety Officer and only authorized user listed on the license, about the treatment modalities for which the strontium-90 source was used. Dr. Bauer stated that the source had been used for the treatment of pterygium, an eye condition. When the inspectors asked Dr. Bauer whether the source had ever been used for any other modality, he again replied that the source had been used to treat pterygium.

The inspectors then requested records of the last six patients who received treatment with the strontium-90 source. The records provided to the inspectors reflected only eye treatments. Subsequently, the inspectors performed a review of the patient treatment log maintained by Dr. Bauer's secretary, as well as a review of records of additional patient treatments. The inspectors learned that the records initially provided were not for the last six patients treated, and that the records of the last six patient treatments included treatments for superficial lesions of the skin using the strontium-90 source, including a treatment that occurred on the day of the inspection before the inspection took place.

Dr. Bauer's failure to inform the inspectors that he had used the strontium-90 source to treat lesions of the skin, when specifically asked if the source was used for any purpose other than superficial eye treatments, caused the Indiana Regional Cancer Center to violate the requirements of 10 CFR 30.9, in that Dr. Bauer failed to provide information that was complete and accurate in all material respects to the NRC. In addition, in view of Bauer's use of the strontium-90 source for treatment of skin lesions prior to and on the day of the inspection, Dr. Bauer's communications to the inspector also constitute a violation of 10 CFR 30.10, in that Dr. Bauer deliberately provided to the NRC information that he knew to be incomplete or inaccurate in some material respect.

Previously, Dr. Bauer was involved in an incident in November 1992 at the Indiana Regional Cancer Center, as an authorized user and the supervisor of a treatment with a High Dose Rate Remote Afterloader (under Byproduct Materials License No. 37–28540–01 issued to Oncology Services Corporation), that resulted in a patient being exposed to significant levels of radiation, and numerous other members of the public being exposed to unnecessary radiation. Dr. Bauer had failed to cause a survey to be performed which was required by 10 CFR 20.201 and which could have prevented the exposures.

Based on the above, the NRC issued a Demand for Information (Demand) to Dr. Bauer on November 16, 1993. The Demand required Dr. Bauer to state: (1) Why the NRC should not issue an Order prohibiting Dr. Bauer's involvement in all NRC licensed activities; and (2) if such an Order should not be issued, why the NRC should have confidence that Dr. Bauer would comply with all Commission requirements. The Demand also required Dr. Bauer to state each institution and location at which Dr. Bauer engages in licensed activities.

In a letter dated January 5, 1994, Dr. Bauer, through his counsel, responded to the Demand for Information. The response stated that Dr. Bauer was a highly competent board certified radiation oncologist and radiologist with in excess of thirty years of experience in the safe use of radioactive materials; listed a number of areas where the licensee was found to be in compliance with NRC requirements and noted that there were no radiation safety violations, no harm to any individuals, and no risk to the public health and safety; stated that Dr. Bauer believed he was permitted to use the strontium-90 source for superficial skin lesion treatments; stated that Dr. Bauer fully and truthfully responded to all questions, and provided all requested information to the inspectors during the November 11, 1993 inspection; noted that the NRC had not attempted to levy any civil penalty for Dr. Bauer's alleged "failure to do an adequate survey in November 1992", and stated that the NRC has admitted that Dr. Bauer did not violate any license condition in November 1992 by allegedly failing to do an adequate survey; noted that the licensee's past performance has been exemplary; stated that there is no basis for the NRC to believe that Dr. Bauer will not comply with all Commission requirements, noting that he has in the

past and will at all times in the future continue to use his best efforts to fully comply with all Commission requirements; stated that there has never been any finding that Dr. Bauer willfully or negligently violated any federal regulations or that he improperly uses radioactive material; and argued that to bar Dr. Bauer from any future licensed activities would constitute a travesty of justice to Dr. Bauer, the patients who rely on him, and society in general.

III

Based on the above, and after giving due consideration to his response to the Demand for Information, it appears that Dr. Bauer has engaged in deliberate misconduct that has caused the Licensee to be in violation of 10 CFR 30.9; deliberately provided to NRC inspectors information that he knew to be incomplete or inaccurate in some respect material to the NRC, in violation of 10 CFR 30.10; and failed to conduct a required survey on November 16, 1992, which resulted in unnecessary radiation exposure to members of the public and a significant misadministration. The NRC must be able to rely on the Licensee and its employees, especially its authorized users and Radiation Safety Officer, to comply with all NRC requirements, including the requirement to provide information to the NRC that is complete and accurate in all material respects. Dr. Bauer's action in causing the Indiana Regional Cancer Center to violate 10 CFR 30.9 and his violation of 10 CFR 30.10 through deliberate misrepresentations to the NRC, as well as his failure to perform the required survey noted above, have raised serious doubt as to whether he can be relied upon to comply with NRC requirements and to provide complete and accurate information to the NRC.

Dr. Bauer is the sole authorized user and the Radiation Safety Officer on NRC License No. 37–28179. As such, Dr. Bauer is required to know the requirements of the License and adhere to them. Dr. Bauer is not permitted to select those requirements that he will follow.

Consequently, I lack the requisite reasonable assurance that licensed activities can be conducted in compliance with the Commission's requirements and that the health and safety of the public will be protected, if Dr. Bauer were permitted at this time to be named in any capacity on an NRC license or were permitted to otherwise perform licensed activities. Therefore, the public health, safety and interest require that Dr. Bauer be prohibited from being named on an NRC license in any capacity and from otherwise performing licensed activities for a period of five years from the date of this order. For an additional two years, the public health, safety, and interest require that Dr. Bauer be required to notify the NRC of any involvement in licensed activities to assure that the NRC can monitor the status of Dr. Bauer's compliance with the Commission's regulatory requirements. Furthermore, pursuant to 10 CFR 2.202, I find that the significance of the violations and Dr. Bauer's conduct described above is such that the public health, safety and interest require that this Order be immediately effective.

IV

Accordingly, pursuant to sections 81, 161b, 161i, 182 and 186 of the Atomic Energy Act of 1954, as amended, and the Commission's regulations in 10 CFR 2.202 and 10 CFR 30.10, *It is Hereby Ordered,* Effective Immediately, That:

A. Dr. James Bauer, M.D., is prohibited for five (5) years from the date of this Order from being named on an NRC license in any capacity or from otherwise performing NRC-licensed activities.

B. For an additional two year period following the five year prohibition in Paragraph IV.A. above, Dr. Bauer shall, within 20 days of his acceptance of an employment offer involving NRC-licensed activities or becoming involved in NRC-licensed activities, provide notice to the Director, Office of Enforcement, U.S. Nuclear Regulatory Commission, Washington, D.C. 20555, of the name, address, and telephone number of the employer or the licensed entity where the licensed activities are or will be conducted.

The Director, Office of enforcement, may, in writing, relax or rescind any of the above conditions upon demonstration by Dr. Bauer of good cause.

V

In accordance with 10 CFR 2.202, Dr. Bauer must, and any other person adversely affected by this Order may, submit an answer to this Order, and may request a hearing on this Order, within 20 days of the date of this Order. The answer may consent to this Order. Unless the answer consents to this Order, the answer shall, in writing and under oath or affirmation, specifically admit or deny each allegation or charge made in this Order and shall set forth the matters of fact and law on which Dr. Bauer or other person adversely affected relies and the reasons as to why the Order should not have been issued. Any answer or request for a hearing shall be submitted to the Secretary, U.S. Nuclear Regulatory Commission, Attn: Chief, Docketing and Service Section, Washington, DC 20555. Copies also shall be sent to the Director, Office of Enforcement, U.S. Nuclear Regulatory Commission, Washington, DC 20555, to the Assistant General Counsel for Hearings and Enforcement at the same address, to the Regional Administrator, NRC Region I, 475 Allendale Road, King of Prussia, PA 19406 and to Dr. Bauer if the answer or hearing request is by a person other than Dr. Bauer. If a person other than Dr. Bauer requests a hearing, that person shall set forth with particularity the manner in which his or her interest is adversely affected by this Order and shall address the criteria set forth in 10 CFR 2.714(d).

If a hearing is requested by Dr. Bauer or a person whose interest is adversely affected, the Commission will issue an Order designating the time and place of any hearing. If a hearing is held, the issue to be considered at such hearing shall be whether this Order should be sustained.

Pursuant to 10 CFR 2.202(c)(2)(i), Dr. Bauer, or any other person adversely affected by this Order, may, in addition to demanding a hearing, at the time the answer is filed or sooner, move the presiding officer to set aside the immediate effectiveness of the Order on the ground that the Order, including and need for immediate effectiveness, is not based on adequate evidence but on mere suspicion, unfounded allegations, or error.

In the absence of any request for hearing, the provisions specified in Section IV above shall be final 20 days from the date of this Order without further order or proceedings. An answer or a request for hearing shall not stay the immediate effectiveness of this order.

Dated at Rockville, Maryland this 10th day of May 1994.

For the Nuclear Regulatory Commission.

Hugh L. Thompson, Jr.,

Deputy Executive Director for Nuclear Materials Safety, Safeguards and Operations Support.

[FR Doc.94–11929 Filed 5–16–94; 8:45 am]

BILLING CODE 7510–01–M

SECURITIES AND EXCHANGE COMMISSION

Forms under Review by the Office of Management and Budget

Agency Clearance Officer: John J. Lane, (202) 942–8800.

Upon Written Request, Copy Available From: Securities and Exchange Commission, Office of Filings and Information Services, 450 Fifth Street, NW., Washington, DC 20549.

Revisions

Rule 203–1 and Form ADV—File No. 270–39

Rule 204–1—File No. 270–41,

Notice is hereby given that, pursuant to the Paperwork Reduction Act of 1980 (44 U.S.C. 3501 *et seq.*), the Securities and Exchange Commission has submitted for OMB approval amendments to rule 203–1 and Form ADV and rule 204–1 under the Investment Advisers Act of 1940 ("Advisers Act"). The amendments pertain to disclosure by investment advisers that sponsor "wrap fee programs," arrangements under which investment advice and brokerage services are paid for in a single "wrap" fee.

The amendments to rule 203–1 and Form ADV require sponsors of wrap fee programs to prepare and file with the Commission new Schedule H to Form ADV discussing important information about the wrap fee program. It is estimated that approximately 270 investment advisers will be required to amend their Form ADVs to include Schedule H in the first year after the schedule's adoption, and that each adviser completing Schedule H will incur six burden hours in its preparation. The change in burden resulting from this amendment will be reflected in the burden associated with rule 203–1.

In addition, it is estimated that each year approximately twenty-seven investment advisers will be required to complete Schedule H as part of an initial application for registration on Form ADV, and that each adviser required to complete Schedule H will incur six burden hours in addition to the time currently necessary to complete Form ADV. This change in burden will be reflected in the burden associated with rule 203–1 (Form ADV).

The burden hours associated with rule 203–1 are likely to decline after the amendments' first year. In future years, advisers will be required to update the disclosure required by Schedule H to reflect changes in that disclosure. The Commission estimates that this updating will take significantly less than the six hours necessary to prepare Schedule H initially.

General comments may be directed to the OMB Clearance Officer for the Securities and Exchange Commission at the address below. Comments concerning the accuracy of the estimated average burden hours for compliance with Commission rules and forms should be directed to John J. Lane, Associate Executive Director, Securities and Exchange Commission, 450 Fifth Street, NW., Washington, DC 20549, and to the Clearance Officer for the Securities and Exchange Commission, Office of Information and Regulatory Affairs, Paperwork Reduction Act numbers 3235–0049 and 3235–0048, Office of Management and Budget, room 3201, New Executive Office Building, Washington, DC 20543.

Dated: May 2, 1994.

Margaret H. McFarland,

Deputy Secretary.

[FR Doc. 94–11882 Filed 5–16–94; 8:45 am]

BILLING CODE 8010–01–M

Under Review by Office of Management and Budget

Agency Clearance Officer: John J. Lane (202) 942–8800.

Upon written request copy available from: Securities and Exchange Commission, Office of Filings and Information Services, Washington, DC 20549.

New Collection: Collection of Information Regarding Timing of Registrant Mailings of Proxy Material File No. 270–391.

Notice is hereby given pursuant to the Paperwork Reduction Act of 1980 (44 U.S.C. 3501 *et seq.*), that the Securities and Exchange Commission ("Commission") has requested approval to collect information from approximately 100 registrants concerning the timing of their mailings of proxy material during the 1994 proxy season.

The staff estimates that the information collection will result in approximately .25 burden hours per response for a total burden of 25 hours.

General comments regarding the estimated burden hours should be directed to Gary Waxman at the address below. Any comments concerning the accuracy of the estimated average burden hours for compliance with Commission rules and forms should be directed to John J. Lane, Associated Executive Director, Securities and Exchange Commission, 450 Fifth Street, NW., Washington, DC 20549 and Gary Waxman, Clearance Officer, Office of Management and Budget, room 3208, New Executive Office Building, Washington, DC 20503.

Dated: May 10, 1994.

Margaret H. McFarland,

Deputy Secretary.

[FR Doc. 94–11883 Filed 5–16–94; 8:45 am]

BILLING CODE 8010–01–M

[Release No. 34–34044; File No. SR–Phlx–93–39]

Self-Regulatory Organizations; Philadelphia Stock Exchange, Inc.; Order Granting Approval to Proposed Rule Change To Adopt a Supervision Rule

May 11, 1994.

On November 2, 1993, the Philadelphia Stock Exchange, Inc. ("Phlx" or "Exchange") submitted to the Securities and Exchange Commission ("SEC" or "Commission"), pursuant to section 19(b)(1) of the Securities Exchange Act of 1934 ("Act")[1] and Rule 19b–4 thereunder,[2] a proposed rule change to adopt a comprehensive supervision rule.

The proposed rule change was published for comment in Securities Exchange Act Release No. 33303 (December 8, 1993), 58 FR 65610 (December 15, 1993). No comments were received on the proposal.

The Phlx proposed to amend its Rule 748 to add detailed supervision requirements.[3] Phlx Rule 748 currently requires members to supervise activities in customer accounts handled by the firm's branch office managers, customers' men and service men. The rule change amends the language such that a member is required to supervise all accounts handled by registered representatives.[4] In addition, the proposed rule change expands upon the supervision requirement by adding a requirement that all offices, departments and business activities of members and member organizations, and participants and participant organizations (including foreign incorporated branch offices), be under the supervision and control of such members and that the responsibility of doing so be affirmatively delegated to persons within the firms.

Furthermore, proposed Rule 748(c) details the delegation of such responsibility to qualified persons. Persons assuming responsibility must provide for written supervisory procedures and a separate system of follow-up and review to determine whether delegated authority is being properly exercised.

The following is the text of the rule, with italics representing new language

[1] 15 U.S.C. 78s(b)(1) (1988).

[2] 17 CFR 240.19b–4 (1993).

[3] The proposed rule is similar to New York Stock Exchange Rule 342 (Offices—Approval, Supervision and Control).

[4] Registered Representatives of a member or participant organization must be registered with and approved by the Exchange. See Phlx Rule 604 (Registration and Termination of Registered Representatives).

to be added and brackets representing deleted language:

Supervision [of Accounts]

Rule 748*(a)*. Every member is required either personally or through a general partner or an officer who is a holder of voting stock in his organization to supervise diligently all accounts handled by [branch office managers, customers' men and service men] registered representatives employed by such organization.

(b) Each office, department or business activity of a member, member organization, participant or participant organization (including foreign incorporated branch offices) shall be under the supervision and control of the member, member organization, participant or participant organization establishing it and of the personnel delegated such authority and responsibility.

The person in charge of a group of employees shall reasonably discharge his duties and obligations in connection with supervision and control of the activities of those employees related to the business of their employer and compliance with securities laws and regulations.

(c) The general partners or directors of each member organization or participant organization shall provide for appropriate supervisory control and shall designate a general partner or principal executive officer to assume overall authority and responsibility for internal supervision and control of the organization and compliance with securities laws and regulations. This person shall:

(1) Delegate to qualified principals or employees responsibility and authority for supervision and control of each office, department or business activity, and provide for appropriate written procedures of supervision and control.

(2) Establish a separate system of follow-up and review to determine that the delegated authority and responsibility are being properly exercised.

The Commission finds that the proposed rule change is consistent with the requirements of the Act and the rules and regulations thereunder applicable to a national securities exchange, and, in particular, with the requirements of sections 6(b)(1) and 6(b)(5) of the Act.[5] Section 6(b)(1) requires that an exchange be organized and have the capacity to carry out the purposes of the Act and to comply, and to enforce compliance by its members and persons associated with its members with the Act. Section 6(b)(5) requires that the rules of an exchange be designed to promote just and equitable principles of trade, to prevent fraudulent and manipulative acts, and, in general, to protect investors and the public interest.

The Commission believes that imposing specific obligations on members and participants to supervise and control their activities and the activities of their employees in connection with their business and compliance with the federal securities laws, promotes investor protection and the public interest. In addition, a comprehensive supervision rule should help to prevent fraudulent and manipulative acts and practices consistent with section 6(b)(5) of the Act.

The rule requiring comprehensive supervision by Exchange members and participants of their activities, moreover, should promote the Exchange's ability to enforce compliance by members and persons associated with members with the Act and regulations thereunder, consistent with section 6(b)(1) of the Act. As amended, Rule 748 specifies that each member provide written procedures of supervision and control to be followed by persons with delegated authority and establish a separate system of follow-up and review to determine that the delegated authority and responsibility are being properly exercised. The Commission believes that these written procedures and follow-up system of review will enable the Exchange to monitor its members and ensure compliance with the Act.

It is therefore ordered, pursuant to section 19(b)(2) of the Act,[6] that the proposed rule change (SR–Phlx–93–39) is approved.

For the Commission, by the Division of Market Regulation, pursuant to delegated authority.[7]

Margaret H. McFarland,

Deputy Secretary.

[FR Doc. 94–11924 Filed 5–16–94; 8:45 am]

BILLING CODE 8010–01–M

[Release No. 34–34029; File No. SR–NASD–94–18]

Self-Regulatory Organizations; Notice of Filing and Immediate Effectiveness of Proposed Rule Change by the National Association of Securities Dealers, Inc. Relating to the Elimination of Certain Data Stream Subscriber Fees

May 9, 1994.

Pursuant to section 19(b)(1) of the Securities Exchange Act of 1934 ("Act"), 15 U.S.C. 78s(b)(1), notice is hereby given that on March 24, 1994, the National Association of Securities Dealers, Inc. ("NASD" or "Association") filed with the Securities and Exchange Commission ("Commission" or "SEC") the proposed rule change as described in Items I, II, and III below, which Items have been prepared by the NASD. The Commission is publishing this notice to solicit comments on the proposed rule change from interested persons.

I. Self-Regulatory Organization's Statement of the Terms of Substance of the Proposed Rule Change

Pursuant to section 19(b)(1) of the Act, the NASD is submitting this proposed rule change to eliminate the existing subscriber fees for receipt of data streams of selected market data. These fees are currently contained in Section C., Part VIII of Schedule D to the NASD By-Laws. The text of the proposed rule change is set forth below. (New language is in italics and deletions are in brackets.)

C. Special Options

* * * * * * *

[4. Level 1 Data Stream]	[Permits Subscriber to process Level 1 data directly into its computer system for its own analysis. Subscriber is responsible for line and modem charges and separate charges for any terminal display.]	[$500/ month].
[5. Last Sale Data Stream]	[Permits subscriber to process NASDAQ/NMS last sale data directly into its own computer system for analytic purposes. Subscriber is responsible for line and modem charges, and separate charges for any terminal display.]	[$500/ month].

[5] 15 U.S.C. 78f(b)(1) and (5) (1988).

[6] 15 U.S.C. 78s(b)(2) (1988).

[7] 17 CFR 200.30–3(a)(12) (1993).

[6. NQDS Data Stream]	[Permits subscriber to process NQDS quotation data directly into its own computer system for analytic purposes. Subscriber is responsible for line and modem charges, and separate charges for any terminal display.]	[$500/month].
4. [7.] Nasdaq Market Indices	Permits vendor to process Nasdaq Level 1 and Last Sale data feeds solely for the purpose of supplying subscribers with real-time calculations of Nasdaq market indices.	$500/month.

II. Self-Regulatory Organization's Statement of the Purpose of, and Statutory Basis for, the Proposed Rule Change

In its filing with the Commission, the NASD included statements concerning the purpose of and basis for the proposed rule change and discussed any comments it received on the proposed rule change. The text of these statements may be examined at the places specified in Item IV below. The NASD has prepared summaries, set forth in sections (A), (B), and (C) below, of the most significant aspects of such statements.

A. Self-Regulatory Organization's Statement of the Purpose of, and Statutory Basis for, the Proposed Rule Change

1. Purpose

The NASD is proposing to eliminate three categories of subscriber fees for the receipt of data streams consisting of Nasdaq Level 1 quotation information, Nasdaq Last Sale information, and the National Quotation Data Service ("NQDS") information. Each of these services enables a subscriber to receive and process data in its own computer system in order to generate market analytics. The current subscriber charge for each of these services is $500/month regardless of the number of analytic applications performed. The NASD effectuated removal of these data stream fees on April 1, 1994.

The Association's determination on this matter was driven by three factors: (1) technological changes in the use of market information; (2) growth in software packages offered by vendors specializing in market analytics; and (3) practical difficulties in administering the existing fees in light of the increasing sophistication of broker-dealers' internal automation facilities. From a revenue standpoint, elimination of the data stream fees will have no appreciable impact on the level of revenues needed to recover the costs associated with collecting, processing, and distributing quotation/last sale information via the Level 1, Last Sale, and NQDS services.

2. Statutory Basis

The NASD believes that the proposed rule change is consistent with and in furtherance of Section 15A(b)(5) of the Act. Section 15A(b)(5) requires that the rules of a national securities association provide for the equitable allocation of reasonable dues, fees, and other charges among members, issuers and other persons using any facility or system which the association operates or controls. The NASD believes that revenue lost by eliminating the data stream fees will be offset by continued growth in the terminal populations receiving Level 1, Last Sale, and NQDS services. Hence, it is anticipated that total revenues will remain at levels sufficient to ensure satisfaction of the statutory mandate that established fees be reasonable and equitably allocated.

B. Self-Regulatory Organization's Statement on Burden on Competition

The NASD believes that the proposed rule change will not result in any burden on competition that is not necessary or appropriate in furtherance of the purposes of the Act.

C. Self-Regulatory Organization's Statement on Comments on the Proposed Rule Change Received From Members, Participants, or Others

Comments were neither solicited nor received.

III. Date of Effectiveness of the Proposed Rule Change and Timing for Commission Action

The foregoing rule change establishes or changes a due, fee, or other charge imposed by the Association and therefore has become effective pursuant to section 19(b)(3)(A) of the Act and subparagraph (e) of Rule 19b–4 thereunder. At any time within 60 days of the filing of such proposed rule change, the Commission may summarily abrogate such rule change if it appears to the Commission that such action is necessary or appropriate in the public interest, for the protection of investors, or otherwise in furtherance of the purposes of the Act.

IV. Solicitation of Comments

Interested persons are invited to submit written data, views, and arguments concerning the foregoing. Persons making written submissions should file six copies thereof with the Secretary, Securities and Exchange Commission, 450 Fifth Street, NW., Washington, DC. 20549. Copies of the submission, all subsequent amendments, all written statements with respect to the proposed rule change that are filed with the Commission, and all written communications relating to the proposed rule change between the Commission and any person, other than those that may be withheld from the public in accordance with the provisions of 5 U.S.C. 552, will be available for inspection and copying in the Commission's Public Reference Room. Copies of such filing will also be available for inspection and copying at the principal office of the NASD. All submissions should refer to the file number in the caption above and should be submitted by June 7, 1994.

For the Commission, by the Division of Market Regulation, pursuant to delegated authority.

Margaret H. McFarland,

Deputy Secretary.

[FR Doc. 94–11925 Filed 5–16–94; 8:45 am]

BILLING CODE 8010–01–M

[Rel. No. IC–20285; 812–8810]

First Trust Special Situations Trust, First Investors Blue Chip and Treasury Securities Trust, et al.; Application

May 10, 1994.

AGENCY: Securities and Exchange Commission ("SEC").

ACTION: Notice of application for exemption under the Investment Company Act of 1940 (the "Act").

APPLICANTS: First Trust Special Situations Trust, First Investors Blue Chip and Treasury Securities Trust, Series 1 and Subsequent Series (the "Trust"); First Investors Series Fund on behalf of itself and its series, First Investors Blue Chip Series, First Investors Special Situations Series, and First Investors Total Return Series (the "Funds"); First Investors Corporation ("FIC"); First Investors Management Company, Inc. ("FIMCO"); and Nike Securities L.P. or a sponsor controlled by or under common control with Nike Securities L.P. ("Nike").

RELEVANT ACT SECTIONS: Order requested under section 6(c) of the Act to grant exemptions from sections 12(d)(1), 14(a), 19(b), and 22(d) of the Act and rule 19b–1 thereunder; under sections 11(a) and (c) to permit certain offers of exchange; and under section 17(d) and rule 17d–1 to permit certain affiliated transactions.

SUMMARY OF APPLICATION: Applicants seek an order: (a) Permitting series of the Trust to invest in shares of one of the Funds and zero coupon obligations; (b) exempting the sponsor from having to take for its own account or place with others $100,000 worth of units in the Trust; (c) permitting the Trust to distribute capital gains resulting from redemptions of Fund shares within a reasonable time after receipt; (d) permitting waiver of any contingent deferred sales charge ("CDSC") otherwise applicable on Fund shares that the Trust has purchased; (e) permitting certain offers of exchange involving the Trust; and (f) permitting certain affiliated transactions involving the Trust.

FILING DATES: The application was filed on February 2, 1994 and amended on April 29, 1994.

HEARING OR NOTIFICATION OF HEARING: An order granting the application will be issued unless the SEC orders a hearing. Interested persons may request a hearing by writing to the SEC's Secretary and serving applicants with a copy of the request, personally or by mail. Hearing requests should be received by the SEC by 5:30 p.m. on June 6, 1994, and should be accompanied by proof of service on the applicants, in the form of an affidavit or, for lawyers, a certificate of service. Hearing requests should state the nature of the writer's interest, the reason for the request, and the issues contested. Persons who wish to be notified of a hearing may request notification by writing to the SEC's Secretary.

ADDRESSES: Secretary, SEC, 450 Fifth Street, NW., Washington, DC 20549. Applicants: Nike and the Trust, 1001 Warrenville Road, Lisle, Illinois 60532; the Funds, FIMCO and FIC, 95 Wall Street, New York, New York 10005.

FOR FURTHER INFORMATION CONTACT: Felice R. Foundos, Senior Attorney, at (202) 942–0571, or Robert A. Robertson, Branch Chief, at (202) 942–0564 (Division of Investment Management, Office of Investment Company Regulation).

SUPPLEMENTARY INFORMATION: The following is a summary of the application. The complete application may be obtained for a fee from the SEC's Public Reference Branch.

Applicants' Representations

1. Each of the Funds is a series of First Investors Series Fund, an open-end management investment company registered under the Act. FIMCO serves as the Funds' investment adviser, and FIC serves as the Funds' principal underwriter. Each of the Funds offers its shares subject to a rule 12b–1 plan and a front-end sales load. None of the Funds charge, or currently proposes to charge, a CDSC. Applicants request that any relief granted herein apply to any mutual fund other than money market or no-load funds or portfolios thereof that may in the future be advised by FIMCO or an adviser under common control with FIMCO.

2. The Trust will consist of a series of unit investment trusts (the "Trust Series"). Each Trust Series will have a portfolio consisting of shares of one Fund and U.S. Government zero coupon obligations. The Trust's objective is to provide protection of capital while providing for capital appreciation. Each Trust Series will be organized pursuant to a trust agreement that will contain information specific to that Trust Series and will incorporate a master trust indenture between Nike, the sponsor for each Trust Series (the "Sponsor"), and a qualified bank as trustee (the "Trustee").

3. The Sponsor will deposit zero coupon obligations in the Trust at a price determined by an independent evaluator and shares of the Funds at net asset value. The Sponsor expects to deposit substantially more than $100,000 aggregate value of zero coupon obligations and Fund shares in each Trust Series.

4. Trust units will be offered for sale to the public through the final prospectus by the Sponsor. Trust Series will be offered to the public initially at prices based on the net asset value of the Fund shares selected for deposit in that Trust Series, plus the offering side value of the zero coupon obligations contained therein, plus a sales charge. The Trust will redeem units at prices based on the aggregate bid side evaluation of the zero coupon obligations and the net asset value of the Fund shares.

5. With the deposit of the securities in the Trust Series on the initial date of deposit, the Sponsor will have established a proportionate relationship between the principal amounts of zero coupon obligations and Fund shares in the Trust Series. The Sponsor will be permitted under the Trust Agreement to deposit additional securities, which may result in a corresponding increase in the number of units outstanding. Such units may be continuously offered for sale to the public by means of the prospectus. The Sponsor anticipates that any additional securities deposited in the Trust Series subsequent to the initial date of deposit in connection with the sale of these additional units will maintain the proportionate relationship between the principal amounts of zero coupon obligations and Fund shares in the Trust Series.

6. The sales load that normally would be applicable on sales of underlying Fund shares will be waived. Moreover, the Sponsor and FIC will rebate to the Trustee any rule 12b–1 fees they receive on shares of the Funds held by the Trust.

7. Each Trust Series will be structured so that it will contain a sufficient amount of zero coupon obligations to ensure that, at the specified maturity date for such Trust Series, the initial purchasers of units on the first date they are offered would receive back at least the total amount of their original investment in the Trust, including the sales charge. Such investors would receive more than their original investment to the extent that the underlying Fund made any distributions during the life of the Trust and/or had any value at the maturity of the Trust Series.

8. The Sponsor intends to maintain a secondary market for Trust units, but is not obligated to do so. The existence of such a secondary market will reduce the number of units tendered to the Trustee for redemption and thus alleviate the necessity of selling portfolio securities to raise the cash necessary to meet such redemptions. In the event that the Sponsor does not maintain a secondary market, the Trust Agreement will provide that the Sponsor will not instruct the Trustee to sell zero coupon obligations from any Trust Series until shares of the Fund have been liquidated in order not to impair the protection provided by the zero coupon obligations, unless the Trustee is able to sell such zero coupon obligations and still maintain at least the original proportional relationship to unit value and, further, that zero coupon obligations may not be sold to meet Trust expenses.

9. The Trust has taken certain steps to reduce the impact of the termination of a Trust Series of the Fund deposited therein. First, the Trust will, with respect to all unitholders still holding units at scheduled termination and to the extent desired by such unitholders, transfer the registration of their proportionate number of Fund shares from the Trust to a registration in the investor's name in lieu of redeeming such shares. Second, the Fund will offer all such unitholders the option of investing the proceeds from the zero coupon obligations in Fund shares at net asset value. Thus, it is anticipated that many of the unitholders will elect to invest their proceeds of the Trust Series in an account of the Fund and become direct shareholders of the Fund

The Fund also will offer unitholders the option of investing all distributions from the Trust during the life of the Trust Series in Fund shares at net asset value.

Applicants' Legal Analysis

1. Section 12(d)(1) of the Act generally limits acquisition by an investment company, such as the Trust, of shares of a registered investment company, such as a Fund. The section is intended to prevent the duplication of costs, concentration of control and other adverse consequences to investors incident to the pyramiding of investment companies. Applicants' proposal is structured to eliminate duplicative costs. Each of the Funds will sell shares to the Trust at net asset value. The Sponsor and FIC will rebate any rule 12b–1 fees they receive on Fund shares held by the Trust. Since the Trust has an unmanaged portfolio, there will be no duplicative advisory fees charged. Further, no evaluation fee will be charged with respect to Fund shares in the Trust. To address the concern of the concentration of voting power, applicants have agreed that shares of a Fund that are held by a Trust will be voted by the Trustee in the same proportion as all other shares of that Fund not held by the Trust are voted. Lastly, another concern underlying section 12(d)(1) is the possibility of large-scale redemptions of shares of the underlying fund. Applicants believe that the requirements of the Trust Agreement which permit the Trust to sell shares only when necessary to meet the redemptions or pay Trust expenses will greatly limit redemptions of Fund shares.

2. Section 14(a) of the Act requires that investment companies have $100,000 of net worth prior to making a public offering. The Sponsor will deposit substantially more than $100,000 invested in zero coupon obligations and Fund shares in each Trust Series. Applicants recognize, however, that section 14(a) has been interpreted to require that the initial capital investment in an investment company be made without an intent to dispose of the investment. Under this interpretation, the Trust Series would not satisfy section 14(a) because of the Sponsor's intention to sell the units. Consequently, applicants request an exemption from section 14(a). To satisfy the objectives of section 14(a), applicants will comply in all respects with the requirements of rule 14a–3 except that the Trust would not restrict its portfolio investments to "eligible trust securities."

3. Section 19(b) of the Act and rule 19b–1 thereunder provide that, except under limited circumstances, no registered investment company may distribute long-term gains more than once every twelve months. Applicants request an exemption from rule 19b–1 to the extent necessary to permit capital gains earned in connection with the redemption of Fund shares to be distributed to unitholders along with the Trust's regular distributions.

4. Section 22(d) of the Act generally prohibits a registered investment company from selling its shares except at a current offering price described in the prospectus. While none of the Funds currently impose a CDSC, applicants request an exemption from section 22(d) to the extent necessary to permit the waiver of any CDSC that may be imposed in the future on: (a) redemptions by the Trust of any of its holdings of the Funds; and (b) redemptions by investors of their holdings of the Funds attributable to their (i) reinvestment of proceeds of the zero coupon obligations at maturity of the Trust, (ii) transfer of registration at maturity of the Trust of the proportionate number of Fund shares from the Trust to the investor, and (iii) reinvestment, if any, of Trust distributions made during the life of a Trust.

5. Section 11(a) of the Act makes it unlawful for any registered open-end investment company or principal underwriter for such company to make certain offers of exchange on any basis other than the relative net asset value of the securities to be exchanged, unless the terms of the exchange offer have first been approved by the Commission. Section 11(c) provides that section 11(a) will be applicable to any type of exchange offer involving securities of a registered unit investment trust, irrespective of the basis of exchange. Applicants seek approval of a termination option. At the termination of the Trust, unitholders still holding units at maturity will have the option of either (a) transferring the registration of their proportionate number of Fund shares from the Trust to a registration in the investor's name, or (b) receiving a cash distribution. Such unitholders also will have the option of either (a) reinvesting the proceeds of the zero-coupon obligations in Fund Shares at net asset value, or (b) receiving a cash distribution. The exchanges will be made on the basis of the net asset value of the Funds shares.

6. Section 17(d) of the Act and rule 17d–1 thereunder make it unlawful for any affiliated person of, or principal underwriter for, a registered investment company, acting as a principal, to engage in a joint transaction with the investment company unless the joint transaction has been approved by the Commission. Applicants' proposed arrangements may be a joint transaction under these provisions. Applicants believe that the proposed arrangements are consistent with the provisions, policies, and purposes of the Act.

Applicants' Conditions

Applicants agree to the following as conditions to the granting of the requested order:

1. The Trustee will not redeem Fund shares except to the extent necessary to meet redemptions of units by unitholders, or to pay Trust expenses should distributions and rebated 12b–1 fees received on Fund shares prove insufficient to cover such expenses.

2. Any rule 12b–1 fees received by the Sponsor or FIC in connection with the distribution of Fund shares to the Trust will be immediately rebated to the Trustee.

3. No one Series of the Trust will, at the time of any deposit of any Fund shares, hold as a result of that deposit, more than 10% of the then-outstanding shares of a Fund.

4. All Trust Series investing in shares of the same Fund will be structured so that their maturity dates will be at least thirty days apart from one another.

5. Applicants will comply in all respects with the requirements of rule 14a–3, except that the Trusts will not restrict their portfolio investments to "eligible trust securities."

6. Shares of a fund which are held by a Series of the Trust will be voted by the Trustee of the Trust, and the Trustee will vote all shares of a Fund held in a Trust in the same proportion as all other shares of that Fund not held by the Trust are voted.

7. No sales charge or redemption fee will be imposed on any shares of the Funds deposited in any Series of the Trust or on any shares acquired by unitholders through reinvestment of dividends or distributions or through reinvestment at termination.

8. In the event any CDSC is imposed by any Fund, applicants agree to comply with rule 6c–10 as currently proposed, and as it may be reproposed, adopted or amended.

9. The prospectus of each Trust Series and any sales literature or advertising that mentions the existence of a reinvestment option will disclose that shareholders who elect to invest in Fund shares will incur a rule 12b–1 fee.

For the SEC, by the Division of Investment Management, under delegated authority.

Margaret H. McFarland,

Deputy Secretary.

[FR Doc. 94–11884 Filed 5–16–94; 8:45 am]

BILLING CODE 8010–01–M

[Release No. IC–20290; File No. 812–8626]

The Mutual Life Insurance Company of New York, et al.

May 11, 1994.

AGENCY: Securities and Exchange Commission (the "SEC" or "Commission").

ACTION: Notice of Application for Exemptions under the Investment Company Act of 1940 (the "1940 Act").

APPLICANTS: The Mutual Life Insurance Company of New York ("Mutual of New York") and Keynote Series Account (the "Variable Account").

RELEVANT 1940 ACT SECTIONS: Exemption requested under Section 17(b) and Section 6(c) from Section 17(a) and approval requested under Section 26(b).

SUMMARY OF APPLICATION: Applicants seek an order approving the substitution (the "Substitution") of beneficial interests in the portfolios of the Diversified Investors Portfolios (the "Trust") for shares of the portfolios of MONY Series Fund, Inc. (the "Fund"), the Trust portfolios thereafter to continue serving as an eligible funding vehicle for the group variable annuity contracts offered by the Variable Account.

FILING DATES: The application was filed on October 15, 1993, and was amended on January 31, 1994, April 5, 1994, and April 27, 1994.

HEARING OR NOTIFICATION OF HEARINGS: An order granting the application will be issued unless the Commission orders a hearing. Interested persons may request a hearing by writing to the Commission's Secretary and serving the Applicants with a copy of the request, personally or by mail. Hearing requests must be received by the SEC by 5:30 p.m. on June 6, 1994, and must be accompanied by proof of service on Applicants in the form of an affidavit or, for lawyers, a certificate of service. Hearing requests should state the nature of the writer's interest, the reason for the request, and the issues contested. Persons may request notification of a hearing by writing to the Secretary of the Commission.

ADDRESSES: Secretary, Securities and Exchange Commission, 450 Fifth Street, NW., Washington, DC 20549. Applicants, c/o Edward P. Bank, Esq., The Mutual Life Insurance Company of New York, 1740 Broadway, New York, New York 10019.

FOR FURTHER INFORMATION CONTACT: C. Christopher Sprague, Senior Staff Attorney, at (202) 942–0670, or Michael V. Wible, Special Counsel, at (202) 942–0670, Office of Insurance Products, Division of Investment Management.

SUPPLEMENTARY INFORMATION: The following is a summary of the application. The complete application is available for a fee from the Commission's Public Reference Branch.

Applicants' Representations

1. Mutual of New York is a mutual life insurance company organized under the laws of the State of New York in 1842. Mutual of New York offers a wide range of insurance and pension investment products including group variable annuity contracts. Mutual of New York is licensed to do business in all states as well as in the District of Columbia and the Virgin Islands.

2. The Variable Account is a segregated investment account registered under the 1940 Act as a unit investment trust, and funds certain group variable annuity contracts (the "Contracts") co-issued by Mutual of New York. The Variable Account is divided into seven sub-accounts (the "Subaccounts"), including six Subaccounts that invest in shares of a corresponding series of the Fund (*i.e.*, the Money Market, Long Term Bond, Intermediate Government Bond, Diversified, Equity Income, and Equity Growth Portfolios of the Fund). The seventh Subaccount, which corresponds to the Calvert Socially Responsible Series (a portfolio of Acacia Capital Corporation) (the "Calvert Series"), will not be affected by the Substitution, and will remain available for allocation of purchase payments by holders of the Contracts ("Contractholders"). MONY Securities Corp. serves as principal underwriter for the Contracts.

3. The Fund is a diversified, open-end management investment company that was organized as a Maryland corporation in 1984. The Fund is comprised of seven series, six of which are available to holders of the Contracts through the Subaccounts.

4. The Trust is a diversified, open-end management investment company that was organized as a trust under the laws of the State of New York. The Trust will be the "hub" in a "hub and spoke" structure in which the Variable Account will be one of the "spokes." Hub and spoke is a registered service mark of Signature Financial Group, Inc. The Trust is authorized to issue shares of up to nine series (each such series, a "Trust Portfolio"), six of which will be available to holders of the Contracts through the Subaccounts. The Trust was created to provide the underlying investment funds for the Variable Account as well as for other insurance company separate accounts, mutual funds, and collective trusts which restrict the offering of interests in such accounts, funds, and trusts to (a) certain employee retirement plans of for-profit and not-for-profit entities, including those having cash or deferred arrangements and those covering self-employed individuals and owner-employees (such as 401(k) plans, money purchase plans, profit sharing plans, simplified employee pension plans, and Keogh Plans), and (b) qualified personal retirement plans such as IRAs and rollover IRAs. Each Trust Portfolio will be managed in compliance with the diversification requirements set forth under Section 817(h) of the Internal Revenue Code. Mutual of New York believes, based upon review of existing federal income tax laws and regulations and the advice of counsel, that the Substitution will not have a material adverse impact on the ability of the Variable Account to meet the diversification requirements. The Trust will offer and sell interests only to entities which qualify under the look-through rule under U.S. Treasury Regulation 1.817–5(f)(2)(i).

5. The Fund Portfolios expected to be eliminated in the Substitution, and the Trust Portfolios expected to be substituted as choices for investment of purchase payments in the Variable Account are as follows:

Fund portfolio	Trust portfolio
Money Market	Money Market.
Long Term Bond	Government/Corporate Bond.
Intermediate Government Bond.	Intermediate Government Bond.
Diversified	Balanced.
Equity Income	Equity Income.
Equity Growth	Equity Growth.

6. Mutual Of New York on its own behalf and on behalf of the Variable Account proposes to effect a substitution of shares of the Trust Portfolios for all shares of the corresponding Fund Portfolios as indicated above. Mutual of New York will schedule the Substitution to occur as soon as practicable following the issuance of the requested order so as to maximize the benefits to be realized from the Substitution. On November 15, 1993, a supplement to the prospectus for the Contracts was sent to Contractholders, and was attached to

prospectuses delivered to new Contractholders. That supplement provided notice to Contractholders that an application seeking approval of the Substitution had been filed with the Commission. The supplement briefly described the Substitution, and identified the Portfolios of the Fund and the respective Portfolios of the Trust that will be substituted therefor. The supplement also described a transaction entered into my Mutual of New York and AUSA Life Insurance Company, Inc. ("AUSA"), pursuant to which AUSA will assume the obligations of Mutual of New York under the Contracts. The assumption by AUSA is the subject of a separate application that is pending with the Commission, and is not the subject of this application.

7. Within five days after the Substitution, Mutual Of New York will send to Contractholders written notice of the Substitution that identifies the shares that have been eliminated and the shares that have been substituted. Mutual of New York will include in such mailing an updated prospectus of the Variable Account that discloses the completion of the Substitution and the availability of the Trust Portfolios. Contractholders will be advised that for a period of sixty days from the mailing of the notice, they may transfer all assets as substituted to any other available Subaccount (including the Calvert Series, which will not be affected by the Substitution). No transfer charge is currently in effect, and none will be imposed prior to the expiration of sixty days from the date of the mailing of the notice. Following the Substitution, Contractholders will be afforded the same contract rights, including surrender and other transfer rights with regard to amounts invested under the Contracts, as they have currently. Mutual Of New York will pay all expenses and transaction costs of the Substitution, including any applicable brokerage commissions.

8. Mutual Of New York will redeem for cash and securities all shares of the Fund Portfolios it currently holds on behalf of the Variable Account at the close of business on the date selected for the Substitution. Mutual Of New York's redemption of shares of the Fund Portfolios will be partly for cash but principally for securities as a partial redemption in kind. The Fund will effect the redemptions in kind to the extent consistent with the investment objectives and diversification requirements applicable to the Fund Portfolios. Mutual Of New York will review the securities selected by the Fund for redemption in kind to assure that such securities are suitable investments for the respective Trust Portfolios. Mutual Of New York will also review securities selected for transfer under the redemption in kind to assure that such securities will not cause either the Fund Portfolios or the Trust Portfolios to fail to meet the diversification requirements of the Internal Revenue Code. Prior to effecting the Substitution, Mutual Of New York will take all actions necessary to comply with the requirements of Section 18(f) of the 1940 Act and Rule 18f–1 thereunder. The securities redeemed in kind will be used together with the cash proceeds to purchase interests in the Trust Portfolios. In all cases, Mutual of New York will simultaneously place the redemption requests with the Fund and the purchase orders with the Trust, so that the purchases will be for the exact amounts of the redemption proceeds. As a result, at all times, monies attributable to Contractholders currently invested in all Subaccounts will be fully invested.

9. Applicants have established certain procedures to ensure that the in kind redemptions will be effected in a fair and equitable manner from the perspectives of the Variable Account, the Fund, and the other separate accounts which presently invest in Fund Portfolios. These procedures, which provide that securities be distributed on a *pro rata* basis (with cash distributed in lieu of fractional interests), will ensure that securities held by the Fund Portfolios which are selected for in kind redemption will be comparable with respect to quality, duration, industry, and other relevant investment criteria to those securities which are not selected for in kind redemption. These procedures will be approved by the Board of Directors of the Fund, including the disinterested directors of the Fund voting separately as a group. In addition, subsequent to the in kind redemption, Applicants will provide a report to the Board of Directors of the Fund which demonstrates full compliance with such procedures. Applicants have determined that it is appropriate to effect the Substitution, based on the current similarity of the portfolio investments of the Fund Portfolios and the corresponding Trust Portfolios.

Applicants' Legal Analysis

1. Section 26(b) of the 1940 Act provides in pertinent part that "[i]t shall be unlawful for any depositor or trustee or a registered unit investment trust holding the security of a single issuer to substitute another security for such security unless the Commission shall have approved such substitution." The purpose of section 26(b) is to protect the expectation of investors in a unit investment trust that the unit investment trust will accumulate the shares of a particular issuer and to prevent unscrutinized substitutions which might, in effect, force shareholders dissatisfied with the substituted security to redeem their shares, thereby incurring either a loss of the sales load deducted from initial proceeds, an additional sales load upon reinvestment of the redemption proceeds, or both. Section 26(b) affords this protection to investors by preventing a depositor or trustee of a unit investment trust holding the shares of one issuer from substituting for those shares the shares of another issuer, unless the Commission approves that substitution.

2. The purposes, terms, and conditions of the Substitution will not entail any of the abuses that Section 26(b) is designed to prevent. The Substitution is appropriate and consistent with Mutual of New York's alternative funding plans for the Contracts through the Trust Portfolios. The Substitution is proposed to provide a consolidation of assets of vehicles that currently and in the future may be expected to be used for pension funding to promote consistent investment performance and to reduce operating expenses.

3. Applicants represent that the Substitution will not result in the type of costly forced redemptions that Section 26(b) was intended to guard against, and is consistent with the protection of investors and the purposes fairly intended by the policy and provisions of the 1940 Act for the following reasons: (a) the Substitution is for shares of the Trust Portfolios, whose objectives, policies, and restrictions are sufficiently similar to those of the substituted Fund Portfolios so as to continue fulfilling the Contractholders' present objectives and expectations: (b) a Contractholder may transfer amounts credited to the Contract either in advance of the Substitution or following the receipt of notice that the Substitution has been effected, including a transfer to the Calvert Series; (c) the Substitution will, in all cases, be at net asset value of the respective shares, without the imposition of any transfer or similar charge; (d) Mutual of New York has undertaken to assume the expenses and transaction costs, including among others, legal and accounting fees and any brokerage commissions, relating to the Substitution (the partial redemptions in kind contemplated for appropriate securities of the Fund Portfolios are expected to reduce such

costs); (e) the Substitution will not restrict future transfers under the Contracts as the Contracts neither limit allowable transfers nor do they currently impose a charge for transfers; (f) the Substitution in no way will alter the insurance benefits to Contractholders or the contractual obligations of Mutual Of New York; (g) the Substitution in no way will alter the tax benefits to Holders; (h) Contractholders may choose to withdraw amounts credited to them following the Substitution under the conditions that currently exist (the Contracts impose no deferred sales load, although a participant may be subject to restrictions under the terms of the plan through which such participant acquired interests in the Contract); and (i) the Substitution is expected to confer certain economic benefits to Contractholders by virtue of the enhanced asset size of the continuing Trust Portfolios.

4. Applicants respectfully submit that it is in the best interests of Contractholders to substitute interests in the Trust Portfolios for corresponding shares of the Fund. The overall investment objectives of the Trust Portfolios are sufficiently similar to those of the corresponding Fund Portfolios for the substitution to be appropriate. The investment objectives of the Money Market, Balanced, Equity Income, Equity Growth, and Intermediate Government Bond portfolios of the Fund are substantially the same as the corresponding Portfolios of the Trust. The Government/Corporate Bond Portfolio has investment objectives that differ slightly from the Long Term Bond Portfolio of the Fund. Both the Trust's Government/Corporate Bond Portfolio and the Fund's Long Term Bond Portfolio seek to provide a high level of current income with an overriding concern for preservation of capital. However, the Trust's Portfolio will seek to accomplish this objective by maintaining a remaining average maturity of one to four years. The Fund's portfolio seeks to maintain a dollar weighted average life in excess of eight years. Because of the longer average maturity, the Fund's portfolio is more sensitive to changes in interest rates than should be expected from the Trust's Portfolio, with a shorter average maturity. However, at the present time, because of market conditions, no significant difference would be expected in the return expected from the two portfolios. Applicants believe that the investment objectives are compatible and that, on balance, the Government/Corporate Bond Portfolio, because of its shorter average maturity, presents less risk to Contractholders, and therefore, Contractholders should benefit from the substitution of that portfolio.

5. Total expenses as a percentage of average net assets for investors in the Subaccounts are not expected to increase as a result of the Substitution. The investment advisor to the Trust Portfolios has agreed, through at least April 30, 1995, to waive its fees as investment advisor to, and administrator of, the Trust Portfolios so that total operating expenses of each Trust Portfolio are maintained at their current level, which is less than or equal to the total operating expenses of each corresponding portfolio of the Fund.

6. Section 17(a)(1) of the 1940 Act prohibits any affiliated person of a registered investment company, or an affiliated person of an affiliated person, from selling any security or other property to such registered investment company. Section 17(a)(2) of the 1940 Act prohibits any of such affiliated persons from purchasing any security or other property from such registered investment company. The Substitution may be deemed to entail one or more purchases or sales of securities between and among affiliated persons as a result of the purchase by the Subaccounts of interests in the Trust Portfolios with proceeds from the sale of shares of the Fund portfolios. In addition, the Substitution would not be exempt from Section 17 pursuant to Rule 17a–7 under the 1940 Act because the affiliations among the Variable Account, the Fund, and the trust do not solely arise by reason of having common investment advisers, common directors, and/or common officers. Applicants state that the sale and purchase transactions constituting the Substitution could come within the scope of Section 17(a)(1) and 17(a)(2) of the 1940 Act, respectively. Therefore, the Substitution requires an exemption from Section 17(a) of the 1940 Act, pursuant to Section 17(b) of the 1940 Act.

7. Section 17(b) of the 1940 Act provides that the Commission may grant an order exempting the transactions prohibited by Section 17(a) upon application if evidence establishes that: (a) the terms of the proposed transaction, including the consideration to be paid or received, are reasonable and fair and do not involve overreaching on the part of any person concerned; (b) the proposed transaction is consistent with the investment policy of each registered investment company concerned, as recited in its registration statement and reports filed under the 1940 Act; and (c) the proposed transaction is consistent with the general purposes of the 1940 Act. Applicants seek an exemption from section 17(a) under both sections 17(b) and 6(c) of the 1940 Act, because Section 17(b) refers to a single "proposed transaction," while under Section 6(c), the Commission may exempt a series of transactions.

8. Applicants state that for all the reasons cited in connection with their request for an order under Section 26(b), the Substitution is reasonable and fair. The transactions effecting the substitution including the redemption of Fund shares and the purchase of interests in the Trust Portfolios will be effected in conformity with Section 22(c) of the 1940 Act and Rule 22c–1 thereunder. Moreover, the in-kind redemptions of Fund shares will be effected in conformity with Section 18(f) and Rule 18f–1 thereunder, Rule 17a–7, and the Fund's established procedures pursuant to Rule 17a–7. Contractholder interests following the Substitution will not be diluted, and will not differ in any measurable way from such interests immediately prior to the Substitution in practical economic terms. Applicants state that in each case, the consideration to be received and paid is reasonable and fair. Applicants also assert that the Substitution is consistent with the investment policy of the Fund and the Trust in that the investment objectives of the substituted Trust Portfolios are substantially similar to the objectives of the corresponding Fund portfolios.

9. Mutual of New York believes, based on its review of existing federal income tax laws and regulations and the advice of counsel, that the Substitution will not give rise to any taxable income for Contractholders.

10. Applicants state that the Substitution is consistent with the general purposes of the 1940 Act. Applicants state that the Substitution does not present any of the investor protection concerns and other issues that the 1940 Act is designed to address. Applicants also note that Contractholders will be fully informed of the terms of the Substitution through the prospectus of the Variable Account and the notice, and will have an opportunity to reallocate investments prior to and following the Substitution.

Applicants' Conclusion

For the reasons discussed above, Applicants submit that the requested order under section 26(b) meets the standards of that section, and that the requested exemption from section 17(a) meets the standards of section 17(b) and section 6(c).

For the Commission, by the Division of Investment Management, under delegated authority.

Margaret H. McFarland,

Deputy Secretary.

[FR Doc. 94–11926 Filed 5–16–94; 8:45 am]

BILLING CODE 8010–01–M

[Rel. No. IC–20287; 812–8796]

Rembrandt Funds SM, et al.; Notice of Application

May 10, 1994.

AGENCY: Securities and Exchange Commission ("SEC").

ACTION: Notice of application for exemption under the Investment Company Act of 1940 (the "Act").

APPLICANTS: Rembrandt Funds SM and LaSalle Street Capital Management, Ltd. ("LaSalle"), on behalf of themselves and other registered investment companies that are now or in the future advised by LaSalle or an entity controlling, controlled by, or under common control with LaSalle.[1]

RELEVANT ACT SECTIONS: Exemption requested under section 6(c) of the Act for an exemption from section 12(d)(1)(A)(ii), under sections 6(c) and 17(b) for an exemption from section 17(a), and under rule 17d–1 to permit certain transactions in accordance with section 17(d) of the Act and rule 17d–1.

SUMMARY OF APPLICATION: Applicants seek an order that would permit certain money market funds to sell their shares to affiliated investment companies.

FILING DATE: The application was filed on January 26, 1994, and amended on April 1, 1994 and April 29, 1994.

HEARING OR NOTIFICATION OF HEARING: An order granting the application will be issued unless the SEC orders a hearing. Interested persons may request a hearing by writing to the SEC's Secretary and serving applicants with a copy of the request, personally or by mail. Hearing requests should be received by the SEC by 5:30 p.m. on June 6, 1994, and should be accompanied by proof of service on applicants, in the form of an affidavit or, for lawyers, a certificate of service. Hearing requests should state the nature of the writer's interest, the reason for the request, and the issues contested. persons may request notification of a hearing by writing to the SEC's Secretary.

ADDRESSES: Secretary, SEC, 450 5th Street NW., Washington, DC 20549. Applicants, 10 South LaSalle Street, suite 3701, Chicago, IL 60603.

FOR FURTHER INFORMATION CONTACT: James E. Anderson, Staff Attorney, at (202) 942–0573, or C. David Messman, Branch Chief, at (202) 942–0564 (Division of Investment Management, Office of Investment Company Regulation).

SUPPLEMENTARY INFORMATION: The following is a summary of the application. The complete application may be obtained for a fee at the SEC's Public Reference Branch.

Applicants' Representations

1. Rembrandt Funds SM is an open-end management investment company that currently offers 16 series (each a "Fund"). Four of the Funds are money market funds (the "Money Market Funds") and are subject to the requirements of rule 2a–7 under the Act. The other twelve Funds are non-money market funds (the "Non-Money Market Funds").

2. LaSalle is the investment adviser for each of the Funds. ABN de Neuflize International Investment Advisory Company B.V. serves as sub-adviser for some of the Funds. (Collectively, LaSalle and the sub-adviser are the "Investment Advisers.") SEI Financial Services Company (the "Distributor") serves as the distributor for the Funds, and SEI Financial Management Corporation is the manager, transfer agent, and administrator for the Funds. CoreStates Bank, N.A. serves as custodian to the Funds.

3. The Money Market Funds seek current income, liquidity, and capital preservation by investing exclusively in short-term money market instruments, such as U.S. government securities, bank obligations, commercial paper, municipal obligations, or repurchase agreements secured by government securities. These short-term debt securities are valued at their amortized cost pursuant to the requirements of rule 2a–7. The Non-Money Market Funds invest in a variety of debt and/or equity securities in accordance with their respective investment objectives and policies. Each of the Funds has, or may be expected to have, uninvested cash in an account with the custodian. This cash either may be invested directly in individual short-term money market instruments or may not be otherwise invested in any portfolio securities.

4. Applicants seek an order that would permit (a) the Funds to utilize their cash reserves that have not been invested in portfolio securities to purchase shares of the Money Market Funds (each Fund, including Money Market Funds, purchasing shares of the Money Market Funds is an "Investing Fund") and (b) the Money Market Funds to sell or redeem their shares to or from each Investing Fund. By investing cash balances in the Money Market Funds as proposed, applicants believe that the Investing Funds will be able to combine their cash balances and thereby reduce their transaction costs, create more liquidity, enjoy greater returns, and further diversify their holdings. The policies of the Funds permit the Funds to purchase money market instruments, including shares of a money market fund.

5. The shareholders of the Investing Funds would not be subject to the imposition of double management fees. Applicants would cause each Investment Adviser and its respective affiliates to remit to the respective Investing Funds, or waive, an amount equal to the investment advisory fees these service providers earn as a result of the Investing Funds' investments in the Money Market Funds to the extent the fees are based upon the Investing Funds' assets invested in shares of the Money Market Funds. Further, no sales charge, contingent deferred sales charge, 13b–1 fee, or other underwriting or distribution fee would be charged by the Money Market Funds with respect to the purchase or redemption of their shares. If a Money Market Fund offers more than one class of shares, each Investing Fund will invest only in the Class with the lowest expense ratio at the time of the investment.

6. Several of the funds have voluntary expense cap arrangements with LaSalle for the purpose of keeping each Fund's total expenses below a certain predetermined percentage amount ("Expense Waiver"). To the extent actual expenses of the Funds exceed these caps, LaSalle waives or reimburses a Fund in the amount of the excess. Any applicable Expense Waiver will not limit the advisory and administrative fee waiver or remittance discussed above.

7. Applicants also request relief that would permit the Funds to invest uninvested cash in a Money Market Fund in excess of the percentage limitations set out in section 12(d)(A)(ii) of the Act. Section 12(d)(A)(ii) prohibits a registered investment company from acquiring the securities of another investment company if, immediately thereafter, the acquiring company would have more than 5% of its total assets invested in the securities of the selling company. Applicants propose that each Fund be permitted to invest in shares of a Money Market Fund so long

[1] All existing investment companies that presently intend to rely on the requested order are named as applicants.

as each Fund's aggregate investment in such Money Market Fund does not exceed the greater of 5% of such Fund's total net assets or $2.5 million. Applicants will comply with all other provisions of section 12(d)(1).

Applicants' Legal Analysis

1. Sections 17(a) (1) and (2) of the Act make it unlawful for any affiliated person of a registered investment company, or any affiliated person of such affiliated person, acting as principal, to sell or purchase any security to or from such investment company. Because each Fund may be deemed to be under common control with the other Funds, it may be an "affiliated person," as defined in section 2(a)(3) of the Act, of the other Funds, Accordingly, the sale of shares of the Money Market Funds to the Investing Funds, and the redemption of such shares from the Investing Funds, would be prohibited under section 17(a).

2. Section 17(b) of the Act authorizes the SEC to exempt a transaction from section 17(a) if the terms of the proposed transaction, including the consideration to be paid or received, are reasonable and fair and do not involve overreaching on the part of any person concerned, the proposed transaction is consistent with the policy of each registered investment company concerned, and the proposed transaction is consistent with the general policy of the Act. Section 17(b) could be interpreted to exempt only a single transaction. However, the SEC, under section 6(c) of the Act, may exempt a series of transactions that otherwise would be prohibited by section 17(a).

3. The Investing Funds will retain their ability to invest their cash balances directly into money market instruments if they believe they can obtain a higher return. Each of the Money Market Funds has the right to discontinue selling shares to any of the Investing Funds if its board of trustees determines that such sales would aversely affect the portfolio management and operations of such Money Market Fund. Therefore, applicants believe that the proposal satisfies the standards for relief.

4. Section 17(d) of the Act and rule 17d–1 thereunder prohibit an affiliated person of an investment company, acting as principal, from participating in or effecting any transaction in connection with any joint enterprise or joint arrangement in which the investment company participates. Each Investing Fund, by purchasing shares of the Money Market Funds; each Investment Adviser of an Investing Fund, by managing the assets of the Investing Funds invested in the Money Market Funds; and each of the Money Market Funds, by selling shares to the Investing Funds, could be participants in a joint enterprise or other joint arrangement within the meaning of section 17(d)(1) and rule 17d–1.

5. Rule 17d–1 permits the SEC to approve a proposed joint transaction covered by the terms of section 17(d). In determining whether to approve a transaction, the SEC is to consider whether the proposed transaction is consistent with the provisions, policies, and purposes of the Act, and the extent to which the participation of the investment companies is on a basis different from or less advantageous than that of the other participants. Applicants believe that the proposal satisfies these standards.

6. Section 12(d)(1), as noted above, sets certain limits on an investment company's ability to invest in the shares of another investment company. The perceived abuses section 12(d)(1) sought to address include undue influence by an acquiring fund over the management of an acquired fund, layering of fees, and complex structures. Applicants believe that none of these concerns are presented by the proposed transactions and that the proposed transactions meet the section 6(c) standards for relief.

Applicants' Conditions

Applicants agree that the order granting the requested relief will be subject to the following conditions:

1. Shares of the Money Market Funds sold to and redeemed from the Investing Funds will not be subject to a sales load, redemption fee, or distribution fee under a plan adopted in accordance with rule 12b–1.

2. Applicants will cause the Investment Advisers and their respective affiliates, in their capacities as service providers for the Money Market Funds, to remit to the respective Investing Fund, or waive, an amount equal to all investment advisory fees received by them or their affiliates under their respective investment advisory agreements with the Money Market Funds to the extent such fees are based upon the Investing Fund's assets invested in shares of the Money Market Funds. Any of these fees remitted or waived will not be subject to recoupment by the Funds' Investment Advisers at a later date.

3. For the purpose of determining any amount to be waived and/or expenses to be borne to comply with any Expense Waiver, the adjusted fees for an Investing Fund (gross fees minus Expense Waiver) will be calculated without reference to the amounts waived or remitted pursuant to condition 2. Adjusted fees then will be reduced by the amount waived pursuant to condition 2. If the amount waived pursuant to condition 2 exceeds adjusted fees, the Investing Fund's Investment Adviser also will reimburse the Investing Fund in an amount equal to such excess.

4. Each of the Investing Funds will be permitted to invest uninvested cash in, and hold shares of, a Money Market Fund only to the extent that the Investing Fund's aggregate investment in such Money Market Fund does not exceed the greater of 5% of the Investing Fund's total net assets or $2.5 million.

5. Each Investing Fund will vote its shares of each Money Market Fund in the same proportion as the votes of all other shareholders of such Money Market Funds entitled to vote on the matter.

6. As shareholders of a Money Market Fund, the Investing Funds will receive dividends and bear their proportionate share of expenses on the same basis as other shareholders of such Money Market Funds. A separate account will be established in the shareholder records of each of the Money Market Funds for each of the acquiring Investing Funds.

For the SEC, by the Division of Investment Management, pursuant to delegated authority.

Margaret H. McFarland,

Deputy Secretary.

[FR Doc. 94–11885 Filed 5–16–94; 8:45 am]

BILLING CODE 8010–01–M

SMALL BUSINESS ADMINISTRATION

Business Loans, Secondary Market

AGENCY: Small Business Administration.

ACTION: Revision of SBA Form 1086.

SUMMARY: On November 23, 1992, (57 FR 54949), the public was asked to comment on a proposed revision of Small Business Administration (SBA) Form 1086, Secondary Participation Guaranty Agreement. Very few comments were received. These have been analyzed and SBA has made certain changes based thereon. SBA is hereby publishing a revision of Form 1086.

EFFECTIVE DATE: The revised Form 1086 must be used on any Guaranteed Interest received by the Fiscal and Transfer Agent on and after (60 days from the date of this publication).

FOR FURTHER INFORMATION CONTACT: James W. Hammersley (202–205–6493) or Marybeth Kerrigan (202–205–6493).

Suite 8300, Small Business Administration, 409 3rd St. SW, Washington, DC, 20416.

SUPPLEMENTARY INFORMATION: The Small Business Administration has prepared a revision of the document (SBA Form 1086) used to execute the sale of the Guaranteed Interest portion of a 7(a) loan into the secondary market. The modifications address changes in the market and are intended to improve program operations. The revision incorporates several changes that have been suggested by lenders, investors and broker/dealers.

On November 23, 1992 (57 FR 54949), the public was asked to provide comments on the proposed revision. Very few comments were received. These have been analyzed and SBA has made certain changes to the revision that had been proposed.

The major changes to SBA Form 1086 are these:

1. The "Date of First Disbursement" has been added to the Lender Certifications in Section I.

2. Language incorporating the "normal" servicing fee and the "premium protection fee" has been implemented.

3. Language incorporating the 40 basis point program fee and the program user fee equal to 50% of the portion of the sale price in excess of 110 percent of the principal amount outstanding of the guaranteed portion has been added.

4. The provision for a split wire settlement has been removed. During a recent sample period, fewer than 5 percent of settlements used this facility. It was subject to abuse, including an attempt by an unregistered broker to wire money to a personal checking account.

5. The premium refund language has been modified to include borrower prepayments as well as defaults.

6. The grace period for late payments to Colson is changed. Payments will now be due on the 3rd of the month or the next business day if the 3rd is not a business day. The grace period will be two business days after the due date.

Following is the revised SBA Form 1086.

Erskine B. Bowles,
Administrator.

OMB NO. 3245–0185
EXPIRATION DATE: 1/31/97
SBA LOAN NUMBER_____

SECONDARY PARTICIPATION GUARANTY AGREEMENT

IMPORTANT INFORMATION

THIS FORM IS TO BE USED FOR THE INITIAL TRANSFER ONLY. ALL SUBSEQUENT TRANSFERS MUST USE THE DETACHED ASSIGNMENT SBA FORM 1088. LOANS SOLD USING SBA FORM 1084 MUST BE CERTIFICATED PRIOR TO RESALE: USE SBA FORM 1085.

A. LENDER CERTIFICATIONS. The LENDER CERTIFIES, by signing this document, among other things that: (See paragraphs 3, 10 and 20 of the Terms and Conditions herein)

(1) Lender, including its officers, directors and employees, has no knowledge of a default by Borrower and has no knowledge or information that would indicate the likelihood of a default.

(2) Lender has paid the SBA guaranty fee.

(3) The loan is fully disbursed, and

(4) Lender acknowledges that it has no authority to unilaterally repurchase the Guaranteed Interest from Registered Holder without the written consent of the SBA.

B. BORROWER PAYMENTS. Lender shall send to the Fiscal and Transfer Agent ("FTA") the FTA share of all Borrower payments received after settlement of the loan sale. LENDER WILL NOT SEND ANY PAYMENTS DIRECTLY TO THE REGISTERED HOLDER OR TO THE BROKER/DEALER. Lender will retain a copy of this Form. Lender will not receive a return copy of this Form after settlement. The Wire transfer receipt from the settlement through FTA will be the Lender's notification that the sale is complete.

C. LENDER PAYMENT AND LATE PAYMENT PENALTY. Lender payment and remittance information (SBA Form 1502) shall be due at FTA on the third calendar day of every month, or the next business day if the third is not a business day. On any payment not received in the offices of FTA by 5 pm Eastern Time on the second business day after the due date, FTA will, on behalf of SBA, levy a late payment penalty of five percent (5%) of the amount remitted late, or $100, whichever is greater (subject to a maximum penalty of $5,000 per month). This penalty will be paid through FTA along with the late penalty identified in paragraph 6(c) that is due to FTA. (See paragraph 6 of the Terms and Conditions.)

D. PAYMENT MODIFICATIONS. Lender may approve one deferral of payment for up to three consecutive monthly payments without obtaining prior permission from Registered Holder. Lender shall immediately notify FTA and SBA of any deferral. Any other payment modification must receive prior approval by Registered Holder. Requests for payment modification must be forwarded to FTA which will forward the proposed modification to Registered Holder or provide the name of such Registered Holder to Lender for direct negotiations at Registered Holder's discretion. (See Paragraph 2 of the Terms and Conditions.)

E. BORROWER PREPAYMENTS. For loans approved by or on behalf of SBA after February 14, 1985. Lender must give ten (10) business days advance written notice to FTA to allow time for FTA to request that Registered Holder return the Certificate. On the date of prepayment. Lender will wire funds to FTA consisting of principal and accrued interest through the date immediately preceding the date funds are wired, plus any penalty or other fees due to FTA. (See Paragraph 15 of the Terms and Conditions.)

F. LENDER REPURCHASES. Unless all conditions in paragraph 20 are met. Lender may repurchase a loan only on a willing buyer-willing seller basis. Lender liquidity or a desire to add loans to a portfolio are not acceptable reasons to pay off a loan at par. (See Paragraphs 3 and 20 of the Terms and Conditions.)

G. PROGRAM FEES. There is a 40 basis point fee collected from all payments received from lender, which is transmitted to SBA to defray program expenses. In addition, FTA will withhold from the settlement transaction one-

G. PROGRAM FEES. There is a 40 basis point fee collected from all payments received from lender, which is transmitted to SBA to defray program expenses. In addition, FTA will withhold from the settlement transaction one-half of the premium amount in excess of 10% of the loan balance. This amount is also sent to SBA to defray program expenses and will not be refunded under any circumstances. (See Section I of the Terms and Conditions.)

TERMS AND CONDITIONS

The Small Business Administration, an Agency of the United States Government ("SBA") and the Lender named below ("Lender") entered into a guaranty agreement on SBA Form 750 ("750 Agreement") applicable to a loan ("Loan") made by Lender in participation with SBA to the Borrower ("Borrower") named below evidenced by Borrower's Note and any modifications thereto ("Note") a copy of which is attached hereto and incorporated by reference. Lender is the beneficiary under the 750 Agreement of SBA's guaranty of the specified percentage of the outstanding balance of the Loan ("Guaranteed Interest").

Section I: Borrower Information and Lender Certifications

Lender _____ Borrower _____

Address _____ Address _____

Zip _____ Zip _____

Contact Person _____ Telephone _____

LENDER CERTIFIES THE FOLLOWING AS OF THE DATE OF LENDER'S SIGNATURE:

Date of 750 Agreement _____ Percent of SBA Guaranty _____

Date of Note _____ Original Face Amount $_____

SBA Loan Authorization Date _____ (Date of SBA Form 529B)

Outstanding Principal Amount of Loan $_____

Outstanding Principal Amount of Guaranteed Interest $_____ (This is the "Par Value")

THE SBA GUARANTY FEE WAS PAID ON _____ [date].

Date of First Disbursement of Loan _____ [date].

Date of Final Disbursement of Loan _____ [date].

Guaranteed portion has a ☐ fixed rate or ☐ variable rate (check one).

Unguaranteed portion has a ☐ fixed rate or ☐ variable rate (check one).

Interest is paid to, but not including _____ [date].

Interest is calculated on ☐ 30/360 or ☐ Actual Days/365 (check one) (OTHER METHODS ARE PROHIBITED.)

THIS INTEREST ACCRUAL SHALL BE MAINTAINED FOR THE LIFE OF THE LOAN.

SBA shall retain a program fee equal to 4/10 of one percent per year of the guaranteed principal amount outstanding. Such fee shall be collected by the FTA from all payments received from Lender. FTA shall transmit such fees to SBA on a regular basis, no less frequently than monthly.

There shall be a minimum servicing fee required by SBA. This fee shall be published from time to time in the **Federal Register**. The minimum servicing fee as of the date of publication of this form is 0.3% per annum for all loans. There shall also be a minimum premium protection fee for any Guaranteed Interest sold at a price greater than Par Value. This fee shall be published from time to time in the **Federal Register**. The minimum premium protection fee as of the date of publication of this form is 0.7% per annum. For any Guaranteed Interest sold at a price greater than Par Value, the total minimum fees, as of the date of publication of this form, are 1.0% per annum.

Except for the period between final disbursement and the first interest adjustment date, lender's total fees must remain constant for the life of the loan. Lender's total fees, as computed on the unpaid principal amount of the Guaranteed Interest shall be entered next to the phrase "Lender's Permanent Fee" below. If this Agreement relates to a variable rate loan, the total fee may be adjusted for the period from final disbursement to the first adjustment date to conform the rate to market rates. If such an adjustment is used, enter the initial fee next to the phrase "Lender's Initial Fee" below.

Lender's Permanent Fee _____

Lender's Initial Fee* _____ (Optional—Variable Rate Loans Only—If initial fee is different than permanent fee)

Price paid for the Guaranteed Interest. (Net of accrued interest. Otherwise include ALL money and other items of value exchanged.)

Price paid by purchaser: $_____% of Par _____

SBA shall retain a program user fee equal to 50% of the portion of the sale price which is in excess of 110 percent of the principal amount outstanding of the guaranteed portion. Such fee shall be collected by the FTA and shall be remitted by FTA to SBA on a regular basis, no less frequently than monthly. SBA will not refund such program user fee under any circumstances.

CASH FLOW YIELD based upon Constant Prepayment Rate. (Enter both mortgage and bond equivalent yield.) For a variable rate loan, the yield should be based upon the current net rate and should be entered as a spread from the Prime Rate. EXAMPLE: Prime +1% based upon 10% Prime Rate.

Constant Annual Prepayment Rate assumption _____% per annum.

* Lender's Initial Fee must conform to the minimum fee requirements described above.

Certificate Interest Rate: _____% [Borrower's Note rate less applicable fees]
Certificate Cap _____% Certificate Floor _____% (if applicable)
Mortgage Yield: (Fixed Rate Loan) _____%
(Variable Rate Loan) Prime (+/−) _____% based on _____% Prime
Bond Equivalent Yield: (Fixed Rate Loan) _____%
(Variable Rate Loan) Prime (+/−) _____% based on _____% Prime

Lender hereby assigns the Guaranteed Interest to Purchaser/Registered Holder as follows:

Name _____
Address _____ Zip code _____
Contact Person _____ Telephone _____

Under the penalties of perjury, Purchaser/Registered Holder certifies that its Taxpayer Identification Number is _____ and that it is not subject to backup withholding pursuant to an Internal Revenue Service Notice. Failure to provide a Taxpayer Identification Number will subject interest earned to backup withholding.

Registered Holder requests SBA to issue through FTA a Guaranteed Interest Certificate ("Certificate") evidencing ownership of the Guaranteed Interest in the name of Registered Holder (such person or entity, or any subsequent transferee, during its respective period of ownership of the Certificate to be called "Registered Holder"). SBA, Lender and Registered Holder (for itself and for any subsequent Registered Holder) agree to the appointment by SBA of FTA to serve as the agent to transfer Certificates and to receive loan repayments, and to transmit such payments to the Registered Holder.

A written notification to or demand upon SBA pursuant to this Agreement shall be made through FTA to:

SBA Servicing Office _____
Address _____
City _____ State _____ Zip _____

SBA Servicing Office Code (Please see attached list of Office Codes at the end of this document) _____

Section II: Lender, Registered Holder and FTA Rights and Responsibilities

1. Lender's Sale of Guaranteed Interest. Lender has sold the Guaranteed Interest and acknowledges that it has received value for that Guaranteed Interest. Lender has given notice and acknowledgment of the transfer of the Guaranteed Interest by completing the following legend on the Note:

The guaranteed portion of this Note has been transferred to a Registered Holder for value.

Dated_____ (Lender)_____

Lender has delivered or hereby delivers to FTA a photocopy of the Note and any modifications thereto with the legend; such photocopy shall be incorporated into this Agreement. This legend shall serve as notification for any future transfer of the Guaranteed Interest. The date of the legend shall be on or before the date of settlement for the sale of the guaranteed interest.

The photocopy of the note and any modifications thereto must have a legend stating that the photocopy is a true and certified copy of the original.

2. Loan Servicing. Lender shall remain obligated under the terms and conditions of the 750 Agreement, and shall continue to service the Loan in the manner set forth in the 750 Agreement. Modifications to the 750 Agreement or the Note that do not affect the repayment terms of the Note may be effected by Lender of SBA without the consent of Registered Holder (for itself and any subsequent Registered Holder). Lender, at the request of Borrower, may grant one deferment of Borrower's scheduled payments for a continuous period not to exceed three (3) months of past or future installments. Lender shall immediately notify FTA and the SBA field office in writing of any deferment. The notification will include (i) the SBA Loan Number, (ii) the Borrower's name, (iii) the terms of such deferment, (iv) the date Borrower is to resume payment, and (v) reconfirmation of the basis of interest calculation (e.g. 30/360 or Actual Days/365). Interest is not waived, only deferred. Subsequent to the deferment period, payments received from Borrower will first be applied to accrued interest until such time as interest is paid to a current status, then to principal and interest. Registered Holder may not demand repurchase of the Guaranteed Interest during the deferment period, or before Borrower's failure to pay the first scheduled installment following the deferment period. Lender shall not authorize any additional deferment, or any extension of Loan maturity without the prior written consent of the Registered Holder.

No change in terms and conditions of repayment of the Note other than the deferment authorized in this paragraph shall be made by Lender or SBA without the prior written consent of Registered Holder. A request for such payment modification must be forwarded by Lender to FTA. FTA will forward the proposed modification to Registered Holder. The Registered Holder must respond to the request within thirty (30) calendar days of the date of the request from FTA. Lack of response will be construed by Lender and FTA as nonconsent, and appropriate action under Paragraphs 10, 11 or 20 of this Agreement will be taken. FTA, at the discretion of Registered Holder, may provide the name of Registered Holder to Lender for direct negotiation of the modification.

3. Representations and Acknowledgment of Lender. Lender hereby certifies that the Loan has been made and fully disbursed to Borrower, and that the full amount of the guaranty fee has been paid to SBA. The outstanding principal amount of the Guaranteed Interest and date to which interest is paid as certified by Lender is accepted by SBA and have been warranted by SBA to the Registered Holder as of the SBA Warranty Date. The Warranty Date is the date this Agreement is settled by Lender and Registered Holder through FTA. Lender shall be liable to SBA for any damage to SBA resulting from any error in (i) the certified principal amount, (ii) percentage of Guaranteed Interest, and/or (iii) date to which interest is paid. Lender also represents that as of the Warranty Date neither it nor any of its

directors, officers, employees, or agents has or should have through the exercise of reasonable diligence, any actual or constructive knowledge of any default by Borrower on the Note, or has any information indicating the likelihood of a default by Borrower or the likelihood of prepayment of the Loan by Borrower by refinancing or otherwise.

If Borrower makes the first three payments required by the Note after the Warranty Date in the month in which they are due and the payments are the full amount required by the Note, the Lender shall have no liability to refund the premium.

If the borrower prepays the loan for any reason within 90 days of the Warranty Date, Lender must refund any premium received.

If the borrower fails to make the first three monthly payments due after the Warranty Date and the borrower enters uncured default within 275 calendar days from the Warranty Date, Lender shall refund any premium received. Borrower payments must be received by the Lender in the month in which they are due and must be full payments as defined in the Borrower's note.

Liability of lender for refund of premium will not be affected by any deferment granted under Paragraph 2 or other payment modification granted during the 90 day period.

SBA shall bear no liability for refund or premium. Lender's failure to refund such premium to Registered Holder may, as determined by SBA, constitute a significant violation of the Rules and Regulations of the Secondary Market.

SBA will not refund the program user fee collected from the premium under any circumstances.

If Lender has repurchased the Guaranteed Interest pursuant to Paragraph 10 or 20, and if the Borrower subsequently makes installment payments on the Note in full for a period of twelve (12) consecutive months. Lender may sell the Guaranteed Interest it has repurchased.

Lender hereby acknowledges that it has no authority pursuant to this Agreement to unilaterally repurchase the Guaranteed Interest from Registered Holder at par without the written consent of SBA.

4. Obligations and Representations of Registered Holder. SBA shall purchase the Guaranteed Interest from Registered Holder pursuant to the terms of this Agreement regardless of whether SBA has any knowledge of possible negligence, fraud or misrepresentation by Lender or Borrower, provided neither Registered Holder nor any person or entity having the beneficial interest in the Guaranteed Interest participated in, or at the time it purchased the Guaranteed Interest had knowledge of, such negligence, fraud or misrepresentation.

Subject to the provisions of 18 U.S.C. § 1001 (relating among other things to false claims) Registered Holder, and any person or entity having the beneficial interest therein, hereby warrants that it was not the Borrower, Lender or an "Associate" of Lender, or anyone standing in the same relationship to Borrower. ("Associate" is defined in Title 13, Code of Federal Regulations, Part 120.) Registered Holder warrants that it had neither participated in nor been aware of any negligence, fraud or misrepresentation by Lender or Borrower with respect to the Note or related Loan documentation. Neither execution of this Agreement by SBA, nor purchase by SBA from Registered Holder shall constitute any waiver by SBA of any right of recovery against Lender, Registered Holder, or any other person or entity.

Registered Holder (for itself and each subsequent Registered Holder) hereby acknowledges that the Loan may be terminated on a date other than its maturity date. At that time, the Certificate will be called for redemption, at par, and the Registered Holder must submit an affidavit attesting to the provisions of this paragraph. The Certificate will cease to accrue interest as of the date of such termination, regardless of whether the Certificate is surrendered and the affidavit is received.

5. Issuance of Guaranteed Interest Certificate. SBA, Lender and Registered Holder (for itself and each subsequent Registered Holder) agree that ownership of the Guaranteed Interest shall be evidenced by a Certificate to be issued by SBA. SBA shall issue such Certificate by designating and authorizing such issuance by FTA, or through its own facilities.

FTA shall be the custodian of the executed original of this Agreement. The Agreement shall be delivered to FTA immediately after execution by Lender and Registered Holder. Each Registered Holder shall receive the Certificate described herein. Registered Holder may obtain from FTA a copy of the executed Agreement pertaining to the Guaranteed Interest represented by the Certificate upon payment of a reproduction fee.

Upon execution of this Agreement and delivery to FTA, FTA shall issue to Registered Holder (or to Registered Holder's assignee if FTA is provided written information on a timely basis) the Certificate evidencing the ownership of the Guaranteed Interest in the Loan. If Registered Holder is not the person or entity having the beneficial interest in the Certificate, Registered Holder hereby represents that it has obtained authorization from such holder of beneficial interest appointing Registered Holder as agent for such person or entity with respect to all transactions arising out of the respective obligations under this Agreement.

The Certificate shall identify the Guaranteed Interest and shall state, among other things: (i) Name of Registered Holder, (ii) the Principal Amount of Guaranteed Interest as of the Warranty Date, (iii) the Certificate Interest Rate, and (iv) the Borrower's Payment Date.

Transfer of the Guaranteed Interest by Registered Holder may be effected by the transferee: (i) obtaining from the transferor the executed Detached Assignment and Disclosure Form (SBA Form 1088), (ii) presenting the Certificate and executed Detached Assignment and Disclosure Form to FTA for registration of transfer and issuance of a new Certificate, (iii) paying to FTA a Certificate issuance fee set from time to time by SBA, and (iv) presenting to FTA the exact spelling of the name in which the new Certificate is to be issued, complete address and tax identification number of the new Registered Holder, name and telephone number of the person handling the transfer, and complete instructions for delivery of the new Certificate.

6. Obligations of Lender.

(a) FTS must receive from Lender by the third calendar day of every months, or the next business day thereafter if the third is not a business day, ("FTA Due Date") the FTS's share of all sums Lender received from Borrower as regularly scheduled payments during the proceeding month. By the same date, Lender shall provide the following information on Mandatory Remittance Form (SBA Form 1502), (or an exact facsimile format), with respect to each Loan which Lender has sold to a Registered Holder and which is registered with the FTA. Lender acknowledges that

"each Loan" mans all loans registered with the FTA regardless of which version of SBA Form 1086 or 1085 was executed at the time of sale of transfer. SEE PAYMENT CALCULATION EXAMPLE ATTACHED TO THIS AGREEMENT.

1. The SBA Loan Number
2. The Alpha abbreviation for the SBA field office
3. The Note interest rate (or rates if the interest rate on a variable rate loan changed during the payment period)
4. The interest amount due to the FTA
5. The principal amount due the FTA
6. The total amount due the FTA for the particular Loan
7. The time period covered by the interest rate(s) in Item 3
8. The number of days in the interest period
9. The calendar basis (30/360 or Actual Days/365)
10. The closing principal balance for the Loan
11. A grand total for Items 4, 5 and 6 of all loans sold
12. A late payment penalty (if applicable)

(b) With the exception of prepayments pursuant to Paragraph 15 of this Agreement, payments received other than as regularly scheduled in the previous month must be remitted by Lender to FTA within two (2) business days of receipt of collected funds. Such remittance shall include the information described in Items 1 to 12 above.

(c) As stated in subparagraph (a) above, Lender remittance is due to FTA by the FTA Due Date. POSTMARKS ARE NOT CONSIDERED AS PROOF OF RECEIPT. THE REQUIREMENT IS RECEIPT BY FTA. If Lender remittance, including complete payment information as specified is subparagraph (a) is not received in the office of the FTA by 5 p.m. Eastern Time on the second business day after the FTA Due Date, Lender shall pay:

(i) a late payment penalty to FTA equal to the interest on the unremitted amount at the rate provided in the Note, less the rate of Lender's servicing fee; and

(ii) a late payment penalty to FTA calculated at a rate of twelve percent (12%) per annum on the unremitted amount; and

(iii) a late payment penalty to SBA (collected by FTA), which is the greater of $100 or five percent (5%) of the unremitted amount.

There is no limit on the penalty calculated in (i) and (ii) above. There is a $5,000 per month per reporting unit limit for the penalty identified in (iii) above. SEE EXAMPLE OF LATE PAYMENT PENALTY CALCULATION ATTACHED TO THIS AGREEMENT.

If these penalty fees are not included in the remittance, FTA, on behalf of SBA, shall levy such late payment penalties on Lender. Failure by Lender to pay such penalty and collection fees within ten (10) business days of receipt of a bill for such fees may constitute a significant violation of the Rules and Regulations of the Secondary Market. FTA and SBA reserve the right to withhold these penalty fees from settlement of any future Guaranteed Interest sale, or any payment made by SBA or FTA to Lender.

FTA will retain the penalty and collection fees due FTA and forward the fee due SBA at the end of the month.

(d) Lender agrees to work with SBA and FTA, at no charge, to reconcile immediately any Loan in which the interest paid-to-date on the Lender's books differs from the records of the FTA by three (3) days or more. Lender agrees to provide a transcript of account within ten (10) business days of receipt of a request from SBA or FTA. Failure of Lender to provide a transcript upon request may cause the Lender to be fined $100 by SBA.

(e) Lender's total fees as computed on the unpaid principal amount of the Guaranteed Interest for the period of actual services performed by Lender shall remain as specified in Section I above for the life of the Loan. These Lender fees are not transferable except to an entity to which servicing of the loan is assigned under the provisions of the Form 750 Agreement and SBA Regulations and Standard Operating Procedures.

(f) Lender agrees to deposit the pro rata share of borrower's payment due to the FTA in a trust account with the name "Colson Services Corp., FTA, in trust for the individual security beneficiaries."

7. Obligations of FTA.

(a) FTA shall have the obligation to remit to Registered Holder payments received pursuant to Paragraph 6 of this Agreement (less applicable fees and penalties, if any), as follows:

(i) Investor payment date will be the fifteenth of the month or next business day if the fifteenth is not a business day. Any payment received by the FTA up to the second business day prior to the investor payment date will be sent to the investor on the investor payment date.

(ii) Any payment received by FTA on or after the second business day prior to the investor payment date of the month following Borrower's scheduled payment will be remitted to Registered Holder with two (2) business days of receipt of immediately available funds by FTA. Any late payment penalty received by FTA pursuant to subparagraphs 6(c)(i) and 6(c)(ii) of this Agreement allocated tot he period after the fifteenth day, or the next business day if the fifteenth is not a business day, of such following month shall be remitted to the Registered Holder. The balance of such penalties shall be retained by FTA.

(iii) Other amounts received from Lender by FTA will be held and applied as required by this Agreement.

(iv) With the prior written consent of SBA. FTA may offset from payments due to Registered Holder any prior overpayments made to Registered Holder.

(b) Prepayments pursuant to Paragraph 15 of this Agreement or full redemption payments received by FTA from Lender or SBA shall be remitted by FTA to Registered Holder by wire transfer within two (2) business days of receipt of immediately available funds by the FTA. Payment on full redemption of the Certificate will be made only after presentation of the Certificate to FTA by Registered Holder. FTA shall retain a final transfer fee upon redemption.

(c) Each remittance by FTA to Register Holder shall be accompanied by a statement of (i) the amount allocable to interest, (ii) the amount allocable to principal. and (iii) the remaining principal balance as of the date on which such allocations were calculated.

(d) If FTA fails to make timely remittance to Registered Holder in accordance with this Paragraph 7, FTA shall pay to Registered Holder: (i) interest on the unremitted amount at the rate provided in the Note less applicable fees,

plus (ii) a late payment penalty calculated at a rate of 12% per annum on the amount of such payment, plus (iii) a fee of $100 per loan to SBA. The fee identified in (iii) shall be limited to not more than $50,000 per month.

(e) FTA agrees to identify to Lender each month any Loan in which the paid-to-date on its books differs by three (3) days or more from the paid-to-date on the books of Lender, provided the information required by Paragraph 6(a) has been submitted to FTA by Lender. Such identified differences will be reconciled on a timely basis.

(f) FTA agrees to issue Certificates within two business days of settlement or receipt of Form of Detached Assignment.

(g) FTA agrees to acknowledge any request from Registered Holder for late payment claims within ten (10) business days of receipt.

(h) FTA agrees to forward to Registered Holder, within five (5) business days of receipt, any servicing request requiring concurrence of Registered Holder. FTA agrees to forward Registered Holder's response to Lender within five (5) business days of receipt. If FTA does not receive a response from Registered Holder within thirty (30) calendar days from the date of the request. Registered Holder will be deemed to have submitted a response of nonconsent. FTA is directed to take appropriate action pursuant to Paragraphs 10, 11 or 20 of this Agreement.

(i) Where the Guaranteed Interest is a part of a Pool pursuant to Section 120.700 of the SBA Rules and Regulations as amended, the FTA, as manager of the pool, will, on behalf of Registered Holder of Guaranteed Loan Pool Certificates, agree to servicing actions by Lender that have been approved by SBA that will not affect the rights of the Certificate Holder.

(j) FTA will provide to each SBA field office, in a format approved by SBA, on or before the last business day of each month a report of the execution of Secondary Market Guaranty Agreements (SBA Form 1086) during the previous month.

(k) FTA agrees to pay accrued interest for any loan which FTA fails to include in the late payment report described in Paragraph 10(a). FTA shall be responsible for interest beginning 90 days after the interest paid to date of the loan and continuing until 30 days after the SBA field office receives notification of the arrearage.

8. Transferability of Guaranteed Interest. Each Registered Holder maintains under this Agreement the right to assign the Guaranteed Interest. Each Registered Holder of the Guaranteed Interest shall be deemed to have represented that to the best of its knowledge, it has, and so long as it is a Registered Holder will have, no interest in the Borrower, the Note or the collateral hypothecated to the Loan, other than the Guaranteed Interest held under this Agreement. Each Registered Holder represents that it will not service or attempt to service the Loan, or secure or attempt to secure additional collateral from Borrower.

Without the consent of SBA, Lender or FTA. Registered Holder may transfer the ownership of the Guaranteed Interest to a subsequent assignee (other than the Borrower, Lender, or an "Associate" of the Lender as defined in Title 13, Code of Federal Regulations, Part 120, or anyone standing in the same relationship to the Borrower). The effective date of any transfer of the Guaranteed Interest shall be the date on which such transfer is registered on the books of FTA. Any payment or action by FTA or SBA to the transferor Registered Holder prior to the effective date of the transfer of the Guaranteed Interest shall be final and fully effective. Neither SBA nor FTA shall have any further obligation to the transferee Registered Holder with respect to such payment or action, and any adjustment between the transferor and transferee resulting from such payment or action by SBA or FTA shall be the responsibility and obligation solely of the transferor and transferee.

FTA will make payments on payment date to the person or entity that on the books of FTA is the Registered Holder as of the close of business on the Record Date. The Record Date is the last business day of the prior month. Any other adjustment between transferee and transferor is their responsibility and obligation. At any given time, there shall only be one Registered Holder entitled to the benefits of ownership of the Guaranteed Interest. Upon transfer of the Guaranteed Interest, the transferor shall cease to have any right in the Guaranteed Interest or any obligation or commitment under this Agreement.

FTA shall serve as the central registry of Certificate ownership.

9. Certificates Lost, Destroyed, Stolen, Mutilated or Defaced. Procedures for claim resulting from loss, theft, destruction, mutilation or defacement of a Certificate are found in Title 13, Code of Federal Regulations, Part 120. Upon written request, FTA will provide such procedures to any claimant.

10. Repurchase of Guaranteed Interest by Lender.

(a) FTA will provide to each SBA field office on or before the last business day of the month a list of Loans which are in arrears based on criteria supplied to FTA by SBA.

With five (5) business days of the receipt of the list, the SBA field office will contact Lender to determine the status of the Loan. A Loan requires action where (i) Lender's records indicate the interest paid-to-date is more than (60) days in arrears or (ii) default by Borrower in payment of any installment of principal and interest has continued uncured for more than sixty (60) days. SBA will, in consultation with the Lender, decide on an appropriate remedial action under Paragraph 2 of this Agreement, or determine whether Lender will be offered the option to purchase the guaranteed portion. This decision will be made by SBA within ten (10) business days of the first contact with Lender.

SBA will notify the FTA in writing of the action to be taken within five (5) business days of the decision.

Where the decision is for Lender to purchase the Guaranteed Interest, FTA, at its option, may request a transcript of account from Lender. Lender agrees to provide the transcript of account within ten (10) business days of receipt of the request from FTA. Lender's failure to comply with the request for transcript may result in a $100 penalty payable to SBA.

FTA and Lender will reconcile the transcript of account within ten (10) business days of the receipt of the transcript by FTA. If Lender and FTA cannot agree on the balance and interest paid-to-date within such ten (10) business days, FTA will immediately send the Lender's and FTA's transcript to the SBA field office for reconciliation. The reconciliation by the SBA field office will be final. SBA will notify Lender and FTA of the reconciliation immediately.

Within ten (10) business days of the reconciliation of the account of a Loan that the Lender is to repurchase, the Lender will transmit and FTA will receive ten (10) business days advance written notice of the date of purchase.

Within two (2) business days of receipt of such notification, FTA will notify Registered Holder of the repurchase date and request Registered Holder to forward the Certificate to FTA.

On the date of purchase, Lender, without further notification from FTA, will forward by wire transfer a payment to FTA that includes the outstanding principal balance of the Guaranteed Interest plus interest through the date immediately preceding the date of the wire transfer.

(b) Upon receipt of the purchase amount from Lender (or from SBA pursuant to Paragraph 11 of this Agreement), FTA shall remit to Registered Holder within two (2) business days the outstanding principal balance of the Guaranteed Interest plus interest through the date immediately preceding the date of Lender purchase. FTA may deduct from such amount a final transfer charge for the final transfer and redemption of the Certificate. The amount of such final transfer charge will not exceed the normal transfer charge for certificates.

(c) Upon repurchase of the Guaranteed Interest by Lender, the rights and obligations of Lender, FTA and SBA shall be governed by the 750 Agreement and any continuing provisions of this Agreement.

11. Purchase by SBA.

(a) Written notices will be given to Lender and FTA when SBA is to purchase the Guaranteed Interest. Within five (5) business days of such notice, Lender and FTA will provide a transcript and final statement of account of the Guaranteed Interest to SBA. Failure by Lender or FTA to provide the transcript may result in a $100 penalty payable to SBA by the party failing to comply. SBA will reconcile the transcripts and the reconciliation will be final.

Within ten (10) business days of final reconciliation of the account, SBA will provide ten (10) business days advance written notice to FTA of the date of purchase. FTA, within two (2) business days of the receipt of the written notice, will notify Registered Holder of the repurchase date and request Registered Holder to forward the Certificate to FTA.

On the purchase date, SBA will arrange to have funds wired to FTA. Upon receipt of the purchase amount from SBA, FTA shall remit to Registered Holder, within two (2) business days, the outstanding principal plus accrued interest through the date immediately preceding the date of SBA purchase.

(b) SBA's payment of accrued interest to the payment date on a fixed interest rate Note shall be at the Note rate less the Lender's servicing fee. On Notes with a variable interest rate, SBA's payment of accrued interest shall be at that rate in effect on the date of the earliest uncured Borrower default, if the loan is in default, or at the rate in effect at the time of purchase, less the lender's fees if the loan is not in default.

(c) If Lender fails to furnish a current transcript statement as required by this paragraph and paragraph 13(a)(i) within ten business days after SBA's request therefor, then SBA may rely on the certified statement of account with supporting documentation, from FTA. If any such information shall be inaccurate, whether inadvertently or otherwise, an appropriate adjustment in settlement will be made as expeditiously as possible.

(d) SBA shall not be liable for any amount attributable to any late payment charges pursuant to Paragraph 6 of this Agreement that may be due FTA or Registered Holder.

(e) Upon written demand by SBA, Lender shall immediately repay to SBA the amount by which the amount paid by SBA exceeds the amount of SBA's obligation to Lender under the 750 Agreement, and the amount paid by SBA for any payments by Borrower which were not remitted by Lender to FTA, including accrued interest thereon, plus accrued interest at the Note interest rate computed on the unpaid balance of the Guaranteed Interest from the date of purchase by SBA to date of repayment by Lender.

(f) Upon purchase of the Guaranteed Interest by SBA pursuant to this Paragraph, the rights and obligations of Lender and SBA shall be governed by the 750 Agreement and any continuing provisions of this Agreement. SBA shall be deemed a transferee of the Guaranteed Interest and the final Registered Holder thereof with all the rights and privileges of such Registered Holder under this Agreement.

12. Default by Lender.

(a) Pursuant to Paragraph 10(a) of this Agreement. FTA notifies the SBA field office of Loans which are past due. SBA contacts the Lender to determine status of the Loans.

(b) When SBA determines that the Lender has failed for any reason to remit to FTA the payments required pursuant to Paragraph 6 of this Agreement, SBA may purchase the Guaranteed Interest under the provisions of Paragraph 11 of this Agreement, provided however, under no circumstances shall SBA be liable for any amount attributable to any late payment charge.

(c) If SBA purchases the Guaranteed Interest from Registered Holder because of default by Lender, and if Borrower has not been in uncured default on any payment due under the Note for more than sixty (60) calendar days, SBA shall have the option:

(i) to require Lender to purchase the Guaranteed Interest from SBA for an amount equal to the amount paid by SBA to Registered Holder plus accrued interest (at the interest rate provided in the Note) from the date of the SBA purchase to the date of the Lender's repurchase, plus a penalty equal to twenty percent (20%) of the amount paid by SBA, or

(ii) to require Lender to pay SBA a penalty equal to twenty percent (20%) of the amount paid by SBA to Registered Holder.

(d) If on the date SBA purchases the Guaranteed Interest from Registered Holder pursuant to this Paragraph, Borrower shall be in uncured default for more than sixty (60) calendar days, then the provisions of Paragraphs 11(e) and 11(f) of this Agreement will become applicable in lieu of subparagraph (c) of this paragraph.

(e) If Lender fails to furnish a current transcript statement as required by paragraph 13(a)(i) within ten business days after SBA's request therefor, then SBA may rely on the certified statement of account with supporting documentation from FTA. If any such information shall be inaccurate, whether inadvertently or otherwise, an appropriate adjustment in settlement will be made as expeditiously as possible.

13. Other Obligations of the Lender.

(a) Lender hereby consents to the purchase of the Guaranteed Interest by SBA in accordance with Paragraphs 11 and 12 of this Agreement. Lender shall, within ten business days of a request therefor, and without charge, furnish to SBA and FTA (i) a transcript of account, (ii) a current certified statement of the unpaid principal and interest

then owed by Borrower on the Note, and (iii) a statement covering any payments by Borrower not remitted by Lender to FTA.

(b) Upon request by FTA at any time, Lender shall issue at no charge a certified statement of the outstanding principal amount of the Guaranteed Interest and the effective interest rate on the Note as of the date of such certified statement.

(c) Lender agrees that failure to provide the information requested pursuant to Paragraphs 10, 11, 12 and 13 of this Agreement may result in a $100 penalty payable to SBA.

(d) Lender agrees that purchase of the Guaranteed Interest pursuant to Paragraphs 11 or 12 of this Agreement does not release or otherwise modify any of Lender's obligations to SBA arising from the Loan or the 750 Agreement, and that such purchase by SBA does not waive any of SBA's rights against Lender.

(e) Lender agrees that SBA, as final owner of the Guaranteed Interest under this Agreement, in addition to all rights under the 750 Agreement, shall also have the right to offset against Lender all rights inuring to SBA under this Agreement against SBA's obligation to Lender under the 750 Agreement.

(f) Lender agrees to assign, transfer and deliver the Note and related loan documents to SBA upon written demand from SBA after purchase of the Guaranteed Interest pursuant to this Agreement.

14. Default by Fiscal and Transfer Agent

(a) If FTA receives any payment from Lender or SBA and fails to remit to Registered Holder pursuant to Paragraph 7 of this Agreement, Registered Holder shall have the right to make written demand on FTA for any payment not remitted by FTA.

(b) If FTA fails to remit any such payment within ten (10) business days of such demand, Registered Holder shall have the right to make written demand on the SBA Servicing Office identified in this Agreement.

(c) Upon receipt of written demand from Registered Holder, SBA will verify non-payment by FTA. If non-payment by FTA is verified, SBA, within thirty (30) days of verification of non-payment by FTA, will (i) make payment directly to Registered Holder of the amount of the unremitted payment plus interest at the Certificate rate to day of payment by SBA, or (ii) purchase the Guaranteed Interest pursuant to Paragraph 11 of this Agreement.

(d) FTA shall repay SBA within ten (10) business days after receipt of written demand from SBA an amount equal to the unremitted amount plus interest computed at the interest rate on the Certificate on the unpaid balance of the Guaranteed Interest from the date of the failure of FTA to remit to the Registered Holder to the date of FTA's repayment to SBA. Such payment will not affect FTA's liability for a late payment charge under Paragraph 7 of this Agreement.

15. Prepayment of Refinancing by Borrower.

(a) A borrower may prepay a Loan guaranteed by SBA at any time without penalty. A prepayment subject to this Paragraph is any payment which is greater than twenty percent (20%) of the principal amount outstanding at the time of prepayment.

(b) For loans approved by SBA or on behalf of SBA prior to February 15, 1985, the Lender shall forward any prepayment amount pertaining to the Guaranteed Interest to the FTA within three (3) business days of receipt.

(c) For loans approved by SBA or on behalf of SBA after February 14, 1985, Lender shall transmit written notice to FTA of Borrower's intent to make a partial or total prepayment of principal. Such prepayment can be by refinancing or otherwise. The prepayment date is the date prior to maturity that Lender has established with the FTA, and on which immediately available funds shall be delivered to FTA. The written notice shall be received by the FTA at least ten (10) business days prior to prepayment date, and it shall be Lender's responsibility to verify receipt of such notice by FTA. Lender's notice to FTA shall include:

(i) The SBA loan number and borrower name

(ii) The prepayment date

(iii) The principal amount being prepaid

(iv) The accrued interest due the FTA as of prepayment date (interest shall accrue through and including the calendar day immediately preceding the prepayment date)

(v) A certification by Lender that, to the best of its knowledge and belief, the prepayment funds are either Borrower's own funds or funds borrowed by Borrower (whether or not guaranteed by SBA) pursuant to a separate transaction

(vi) A certification from an officer of the Lender that the prepayment is in accordance with the terms of this Agreement, the Note and applicable law.

The Certifications are intended to guard against Lender's unilateral repurchase of the Guaranteed Interest from the Registered Holder without prior written consent of SBA.

Lender's failure to provide such timely certification may result in a $100 penalty payable to SBA.

(d) On the prepayment date, Lender will wire the amount due to FTA without notification from FTA. If the total funds are not received by FTA on the prepayment date, interest continues to accrue through the day immediately prior to the date that payment is received by FTA. If funds are not received by FTA on the prepayment date, Lender shall have thirty (30) calendar days from the date originally identified as the prepayment date to forward the prepayment funds. The funds will accrue interest through the day immediately prior to the date payment is received by FTA. If funds are not received within this thirty (30) day period, a new written notice is required in accordance with subparagraph (c) above.

(e) FTA shall, upon receipt of notice pursuant to subparagraph (c) of this Paragraph, advise the Lender in writing of any discrepancy between the prepayment information supplied by the lender and the FTA's current records. Lender agrees to work with FTA to resolve errors or miscalculations that were made by the Lender or FTA during the course of the loan and which are discovered subsequent to the prepayment.

(f) FTA will remit the prepayment amount to Registered Holder in accordance with Paragraph 7 of this Agreement.

16. Option to Purchase by SBA. Pursuant to the 750 Agreement, SBA shall at any time have the option to purchase from the Registered Holder the outstanding balance of the Guaranteed Interest at the Note rate less the Lender's servicing fee. Failure of the Registered Holder to submit the Certificate to FTA for redemption on the date of prepayment specified by SBA or FTA will not entitle the Registered Holder to accrued interest beyond such date.

17. Separate or Side Agreements. Separate or side agreements (i) between Lender and Registered Holder, (ii) between a Registered Holder and a subsequent transferee of the Guaranteed Interest, (iii) between FTA and Lender, or (iv) between FTA and any Registered Holder shall not in any way obligate SBA to make any payment except as provided in this Agreement, nor shall it modify the nature or extent of SBA's rights or obligations under the terms of this Agreement or of the 750 Agreement. Any such side agreement which has the effect of distorting the information supplied to SBA is prohibited.

18. Indemnity and Force Majeure. Each party to this Agreement (including FTA) for itself and its successors and assigns, agrees to indemnify and hold harmless any other party (including FTA) from and against any costs, liabilities, and related expenses arising from the performance of its duties or otherwise arising under this Agreement; provided that no indemnification shall be provided under this Agreement for action or failure to act which constitutes negligence, breach of authority, or bad faith.

If any party hereto (including FTA) is in doubt as to the applicability of this Agreement to a communication it has received, it may refer the matter to SBA for an opinion as to whether it may take, suffer or omit any action pursuant to such communications.

Under no circumstances shall any party hereto (including FTA) be held liable to any person or entity for special or consequential damages or for attorneys fees or expenses in connection with its performance under this Agreement.

If any party hereto (including FTA) shall be delayed in its performance hereunder or prevented entirely or in part from completing such performance due to causes or events beyond its control, such delay or non-performance shall be excused and the reasonable time for performance in connection with this Agreement shall be extended to include the period of such delay or non-performance. Causes or events include but are not limited to: (i) Act of God; (ii) postal malfunction; (iii) interruption of power or other utility, transportation, or communication service; (iv) act of civil or military authority; (v) sabotage; (vi) national emergency; (vii) war; (viii) explosion, flood, accident, earthquake or other catastrophe; (ix) fire; (x) strike or other labor problem; (xi) legal action; (xii) present or future law, government order, rule or regulation; or (xiii) shortage of suitable parts, materials, labor or transportation. In disputes between FTA and Lender, or between FTA and Registered Holder, SBA reserves the right to require FTA to take appropriate action as SBA determines, and if legal action is required, SBA will pay reasonable attorney's fees incurred by FTA in taking such action.

19. Fees and Penalties. Lender and Registered Holder shall be responsible for payment of fees and penalties required of them by this Agreement which are in effect on the Settlement Date, and as published from time to time in the Federal Register. If any fees or penalties required in this Agreement, (including but not limited to those described in Paragraphs 5, 6, 10, 11, 12, 13, and 15), are not remitted on a timely basis by Lender, FTA and SBA reserve the right to withhold such fees and penalties from the settlement of any future Guaranteed Interest sale or payment on any defaulted guaranteed loan in the Lender's portfolio.

20. Emergency Repurchase Authority by Lender. In certain critical situations in which the Borrower's ability to remain in business is directly dependent on a change in the provisions relating to the installment payments by Borrower, SBA may permit Lender to repurchase the Guaranteed Interest from Registered Holder. Lender must submit to the SBA field office a written request which includes the following:

(i) Current financial statements of the Borrower.

(ii) A written decline from Registered Holder to a specific request for a change in the terms and conditions of the payment, or a written statement from FTA that no response was received from Registered Holder or the Guaranteed Interest is part of a Pool.

(iii) A statement that the proposed change in the terms and conditions of the Loan is solely for the benefit of Borrower, and

(iv) A certification by Lender that it will make the requested change in the terms and conditions if repurchase is approved by SBA.

The SBA Field Office must review the financial statements of Borrower and any other appropriate information and conclude that (i) a situation exists that Borrower's business will probably fail if the change is not approved, and (ii) that it is probable that the business will survive and resume payment if the change is approved. If all conditions are met, the SBA field office may approve the purchase of the Guaranteed Interest by Lender.

Guaranteed Interests purchased pursuant to this Paragraph may not be resold unless the Borrower has made all payments as scheduled in the Note for a period of twelve (12) months.

21. Inconsistent Provisions and Caption Headings. Any inconsistency between this Agreement and the 750 Agreement shall be resolved in favor of this Agreement. Any inconsistency between this Agreement and Title 13, Code of Federal Regulations, shall be resolved in favor of Title 13. The provisions of the Secondary Market Regulations, (Title 13, Code of Federal Regulations, Part 120) in effect on the Settlement Date, and as may be amended from time to time in the Federal Register, apply to this Agreement unless explicitly stated to be inapplicable. The caption headings for the various Paragraphs herein are for ease of reference only and are not to be deemed part of these Terms and Conditions.

In consideration of the mutual promises herein contained, the parties agree to all the provisions of this Agreement. In WITNESS WHEREOF, the parties have executed this multi-page Agreement this _____ day of _____ 19 ___ in New York State.

(Registered Holder) _____ SMALL BUSINESS ADMINISTRATION

By: _____

Title: _____

Date: _____

By: Administrator, Small Business Administration

(Lender) _____

By: _____

Title: _____

Date: _____

Examined and Accepted by Fiscal and Transfer Agent by: _____

COLSON SERVICES CORP., P.O. Box 54, Bowling Green Station, New York, N.Y. 10274

NOTICE: THE GUARANTEE OF SBA RELATES TO THE UNPAID PRINCIPAL BALANCE OF THE GUARANTEED INTEREST AND THE INTEREST DUE THEREON. ANY PREMIUM PAID BY THE REGISTERED HOLDER FOR THE GUARANTEED INTEREST IS NOT COVERED BY SBA'S GUARANTEE AND IS SUBJECT TO LOSS IN THE EVENT OF PREPAYMENT OR DEFAULT.

This form is required to obtain a benefit.

ATTACHMENT 1—SBA FORM 1086 SAMPLE CALCULATION

Lender's and Investor's Share of a Borrower's Payment

Total Borrower Payment Received By Lender	$3,450.05
Total Interest Payment Calculation:	
Borrower's Balance	$288,857.10
Multiplied by	
Borrower's Interest Rate	8.750%
Multiplied by	
Number of Paid Interest Days	31
Divided by	
Interest Calendar Basis	365
Total Interest payment	$2,146.64
Investor's Share of Interest Payment:	
Borrower's Balance	$288,857.10
Multiplied by	
Percentage of Loan Sold to Investor	75.000%
Multiplied by	
Interest Rate Sold	7.750%
Multiplied by	
Number of Paid Interest Days *	31
Divided by	
Interest Calendar Basis*	365
Investor's Share of Interest Payment to be Remitted to FTA	$1,425.98
Lender's Share of Interest Payment:	
Borrower's Balance	$288,857.10
Multiplied by	
Percentage of Loan Retained by Lender	25.000%
Multiplied by	
Borrower's Interest Rate	8.750%
Multiplied by	
Number of Paid Interest Days	31
Divided by	
Interest Calendar Basis	365
Lender's Share of Interest Payment to be Retained by Lender	$536.66
Lender's Servicing Fee:	
Total Interest	$2,146.64
Minus	
Investor's Interest	$1,425.98
Minus	
Lender's Interest	$536.66
Lender's Servicing Fee to be Retained by Lender	$184.00
Total Borrower Payment received By Lender	$3,450.05
Total Principal Payment:	
Borrower's Total Payment	$3,450.05
Minus	
Total Interest	$2,146.64
Total Principal Payment	$1,303.41
Investor's Share of Principal Payment:	
Total Principal Payment	$1,303.41
Multiplied by	
Percentage of Loan Sold to Investor	75.000%
Investor's Share of Principal Payment to be Remitted to FTA	$977.56
Lender's Share of Principal Payment:	
Total Principal Payment	$1,303.41
Minus	
Investor's Principal Payment	$977.56

Lender's Share of Principal Payment to be Retained by Lender	$325.85
Total to be Remitted to the FTA:	
Investor's Share of Interest Payment	$1,425.98
Plus	
Investor's Share of Principal Payment	$977.56
Total to be Remitted to FTA	$2,403.54
Total to be Retained by the Lender:	
Lender's Share of Interest Payment	$536.66
Plus	
Lender's Share of Principal Payment	325.85
Plus	
Lender's Servicing Fee	$184.00
Total to be Retained by Lender	$1,046.51
Payment Distribution Proof:	
Borrower's Total Payment	$3,450.05
Minus	
Total to be Remitted to the FTA	$2,403.54
Minus	
Total to be Retained by Lender	$1,046.51
Payment Distribution Proof	$0.00

* **Note:** Figures shown are for illustrative purposes only. This example utilizes an actual number of days in each month with a 365 days per year basis. This same procedure may also be utilized for a constant 30 days in each month with a 360 days per year basis.

ATTACHMENT 2—SBA FORM 1086

SBA Field Office Codes and Cities

Region 1

0101	Boston, MA
0172	Augusta, ME
0189	Concord, NH
0156	Hartford, CT
0150	Montpelier, VT
0165	Providence, RI
0130	Springfield, MA

Region 2

0296	Buffalo, NY
0299	Newark, NJ
0202	New York, NY
0252	Hato Rey, PR
0248	Syracuse, NY
0206	Elmira, NY
0235	Melville, NY
0219	Rochester, NY

Region 3

0373	Baltimore, MD
0390	Clarksburg, WV
0303	Philadelphia, PA
0358	Pittsburgh, PA
0304	Richmond, VA
0353	Washington, DC
0325	Charleston, WV
0316	Harrisburg, PA
0318	Wilkes-Barre, PA
0341	Wilmington, DE

Region 4

0405	Atlanta, GA
0459	Birmingham, AL
0460	Charlotte, NC
0464	Columbia, SC
0470	Jackson, MS
0491	Jacksonville, FL
0457	Louisville, KY
0455	Miami, FL
0474	Nashville, TN
0438	Gulfport, MS

Region 5

0507	Chicago, IL
0549	Cleveland, OH
0593	Columbus, OH
0515	Detroit, MI
0562	Indianapolis, IN
0563	Madison, WI
0508	Minneapolis, MN
0545	Cincinnati, OH
0543	Milwaukee, WI
0547	Marquette, MI
0517	Springfield, IL

Region 6

0682	Albuquerque, NM
0610	Dallas, TX
0677	El Paso, TX
0671	Houston, TX
0669	Little Rock, AR
0639	Harlingen (LRGV), TX
0678	Lubbock, TX
0679	New Orleans, LA
0680	Oklahoma City, OK
0681	San Antonio, TX
0637	Corpus Christi, TX
0623	Fort Worth, TX

Region 7

0736	Cedar Rapids, IA
0761	Des Moines, IA
0709	Kansas City, MO
0766	Omaha, NE
0768	St. Louis, MO
0767	Wichita, KS
0721	Springfield, MO

Region 8

0897	Casper, Wy
0811	Denver, CO
0875	Fargo, ND
0885	Helena, MT
0883	Salt Lake City, UT
0876	Sioux Falls, SD

Region 9

0942	Fresno, CA
0951	Honolulu, HI
0944	Las Vegas, NV
0914	Los Angeles, CA
0988	Phoenix, AZ
0954	San Diego, CA
0912	San Francisco, CA
0920	Santa Ana, CA
0995	Agana, Guam
0931	Sacramento, CA
0992	Fresno Comm. Loan Servicing Center

Region 10

1084	Anchorage, AK
1087	Boise, ID
1086	Portland, OR
1013	Seattle, WA
1094	Spokane, WA

ATTACHMENT 3—SBA FORM 1086

EXAMPLE OF A PENALTY CALCULATION FOR LATE LENDER REMITTANCE OF A BORROWER PAYMENT (See Paragraph 6(c))

Example 1

Assume:

1. that a $1,000 payment received by Lender as a regularly scheduled Borrower payment is received by the FTA on the tenth of the month (a business day) following receipt by Lender;
2. that the interest rate on the note less the Lender's servicing fee is 7.75%;
3. that interest is calculated on a 30/360 day basis:

(a) The late penalty is the greater of $100 or 5% of the payment amount, subject to a $5,000 maximum on the Lender's total monthly remittance. $1,000×5%=$50. The penalty is $100	$100
(b) A penalty equal to the interest on the unremitted amount at the rate provided in the Note (less the rate of the Lender's servicing feel)	
Unremitted amount	$1,000
Multiplied by Note Rate minus Lender's servicing fee	7.75%
Multiplied by number of late days	5
Divided by interest calendar basis	350
	$1.08
(c) A late penalty charge calculated at a rate of 12% per annum on the unremitted amount	
Unremitted amount	$1,000
Multiplied by 12%	12%
Multiplied by number of late days	5
Divided by interest calendar basis	360
	$1.67
TOTAL PENALTY	$102.75

ATTACHMENT 3—SBA FORM 1086

EXAMPLE OF A PENALTY CALCULATION FOR LATE LENDER REMITTANCE OF A BORROWER PAYMENT (See Paragraph 6(c))

Example 2

Assume:

1. that a $5,145.96 payment received by lender as a regularly scheduled Borrower payment is received by the FTA on the fifteenth of the month (a business day) following receipt by the Lender;
2. that the interest rate on the note less the Lender's servicing fee is 7.75%;
3. that interest is calculated on an actual/365 day basis:

(a) The late penalty is the greater of $100 or 5% of the payment amount, subject to a $5,000 maximum on the Lender's total monthly remittance. $5.145.96×5%=$257.30. The penalty is $257.30	$257.30
(b) A penalty equal to the interest on the unremitted amount at the rate provided in the Note (less the rate of the Lender's servicing fee)	
Unremitted amount	$5,145.96
Multiplied by Note rate minus Lender's servicing fee	7.75%
Multiplied by number of late days	10
Divided by interest calendar basis	365
	$10.93
(c) A late penalty charge calculated at a rate of 12% per annum on the unremitted amount	
Unremitted amount	$5,145.96
Multiplied by 12%	12%
Multiplied by number of late days	10
Divided by interest calendar basis	365
	$16.92
TOTAL PENALTY	$285.15

ATTACHMENT 4—SBA FORM 1086

PLEASE NOTE: Public reporting burden for this collection of information is estimated to average 3 hours and 45 minutes per response, including the time for reviewing instructions, searching existing data sources, gathering and maintaining the data needed, and completing and reviewing the collection of information. Send comments regarding this burden estimate or any other aspect of this collection of information, including suggestions for reducing this burden, to: Chief, Administrative Information Branch, Suite 5000, 409 Third Street, S.W., Washington, D.C., 20416; and to the Office of Information and Regulatory Affairs, Office of Management and Budget, Washington, DC, 20503.

[FR Doc. 94–11793 Filed 5–16–94; 8:45 am]

BILLING CODE 8025–01–M

DEPARTMENT OF STATE

Bureau of Oceans and International Environmental and Scientific Affairs

[Public Notice 2009]

Certifications Pursuant to Section 609 of Public Law 101–162

SUMMARY: On April 27, 1994, the Department of State certified, pursuant to section 609 of Public Law 101–162, that 9 countries with commercial shrimp trawl fisheries in the Gulf of Mexico, Caribbean and Western Atlantic Ocean (Belize, Brazil, Colombia, Guyana, Honduras, Mexico, Nicaragua, Panama, and Venezuela) have adopted programs to reduce the incidental capture of sea turtles in such fisheries comparable to the program in effect in the United States. The Department certified that the fishing environment in two other countries (Costa Rica and Guatemala) does not pose a threat of the incidental taking of sea turtles protected under Public Law 101–162. The Department was unable to issue certifications on April 27 for Suriname, Trinidad and Tobago, and French Guiana and, as a result, shrimp imports from these countries were prohibited effective May 1, 1994, pursuant to Public Law 101–162. The Department of State subsequently issued a certification for Trinidad and Tobago on May 9, 1994 and, as a result, the ban on shrimp imports that has been in effect since May 1, 1994, was lifted.

EFFECTIVE DATE: May 17, 1994.

FOR FURTHER INFORMATION CONTACT: Mr. Bill Gibbons-Fly, Office of Marine Conservation, Bureau of Oceans and International Environmental and Scientific Affairs, Department of State, Washington, DC 20520–7818; telephone: (202) 647–3940.

SUPPLEMENTARY INFORMATION: Section 609 of Public Law 101–162 prohibits imports of shrimp from certain nations unless the President certifies to the Congress by May 1 of each year either: (1) That the harvesting nation has adopted a program governing the incidental capture of sea turtles in its commercial shrimp fishery comparable to the program in effect in the United States; or (2) that the fishing environment in the harvesting nations does not pose a threat of the incidental taking of sea turtles. The President has delegated the authority to make this certification to the Department of State. Revised State Department guidelines for making the required certifications were published in the **Federal Register** on February 18, 1993 (58 FR 9015).

The countries subject to the provisions of Public Law 101–162 include Belize, Brazil, Colombia, Coast Rica, French Guiana (EC), Guatemala, Guyana, Honduras, Mexico, Nicaragua, Panama, Suriname, Trinidad and Tobago, and Venezuela. On April 27, 1994, the Department of State certified that 11 of the 14 affected countries have met, for the current year, the requirements of the law. The countries that did not receive a certification at that time were Trinidad and Tobago, Suriname, and French Guiana. As a result, shrimp imports from Trinidad and Tobago were prohibited pursuant to Public Law 101–162 effective May 1, 1994. The ban on shrimp imports from Suriname (in effect since May 1, 1993) and French Guiana (in effect since May 1, 1992) remain in place. However, the Department subsequently issued a certification for Trinidad and Tobago on May 9, thus lifting the ban on shrimp imports in effect since May 1, 1994.

The countries that received a certification on April 27, 1994, were Belize, Brazil, Colombia, Costa Rica, Guatemala, Guyana, Mexico, Honduras, Nicaragua, Panama, and Venezuela; with Trinidad and Tobago certified on May 9, 1994. Of these, the Department certified that the fishing environment in Costa Rica and Guatemala does not pose a threat of the incidental taking of sea turtles protected by Public Law 101–162. (In both these counties, the commercial shrimp trawl fleet operates exclusively in the Pacific Ocean with no activity on the Caribbean side.) The Department certified that the other ten countries have adopted a program to reduce the incidental capture of sea turtles in the commercial shrimp trawl fishery comparable to the U.S. program.

May 1, 1994 marks the end of the three-year period provided in the Department's published guidelines for each of the affected countries to develop and implement their programs to require the use of TEDs. In reviewing information for the purpose of making the certifications this year, the Department looked at three principal elements of each country's program: (1) The legal and/or regulatory framework establishing the TED requirement for all commercial shrimp trawl vessels, except those specifically exempt under the Department's guidelines; (2) the implementation of that requirement and the extent to which TEDs are in use on all such vessels; and (3) the efforts of each country to monitor and enforce the TED requirement to ensure compliance. Because each country that received a certification this year has established and is implementing the legal requirement to use TEDs, the Department will place particular emphasis in making further certifications on the third element, monitoring and enforcement of the TED requirement.

Finally, in implementing the ban on shrimp imports from Trinidad and Tobago which was in effect from May 1, 1994, to May 9, 1994, any shipment with a recorded date of export prior to May 1, 1994, was allowed entry into the United States even if it arrived on or after May 1, 1993. That is, shipments in transit prior to the effective date of the ban were not barred from entry.

Dated: May 10, 1994.

Ambassador David A. Colson,

Deputy Assistant Secretary For Oceans.

[FR Doc. 94–11932 Filed 5–16–94; 8:45 am]

BILLING CODE 4710–09–M

DEPARTMENT OF TRANSPORTATION

Coast Guard

[CGD 94–045]

Differential Global Positioning System, Northeast Atlantic Region; Environmental Assessment.

AGENCY: Coast Guard, DOT.

ACTION: Notice of availability.

SUMMARY: The Coast Guard has prepared a Programmatic Environmental Assessment (EA) and Finding of No Significant Impact (FONSI) for implementing a Differential Global Positioning System (DGPS) Service in the Northeast Atlantic Region of the United States. The EA concluded that there will be no significant impact on the environment and that preparation of an Environmental Impact Statement will not be necessary. This notice announces the availability of the EA and FONSI and solicits comments on them.

DATES: Comments must be received on or before June 16, 1994.

ADDRESSES: Comments may be mailed to the Executive Secretary, Marine Safety Council, U.S. Coast Guard Headquarters, 2100 Second Street SW., Washington, DC 20593–0001, or may be delivered to room 3406 at the same address between 8 a.m. and 3 p.m., Monday through Friday, except Federal holidays. The telephone number is (202) 267–1477.

Copies of the EA and FONSI may be obtained by contacting LTJG Randy Navarro at (202) 267–1058 or faxing a request at (202) 267–4427. A copy of the EA (less enclosures) is also available on the Electronic Bulletin Board System (BBS) at the GPS Information Center (GPSIC) in Alexandria, VA, (703) 313–5910. For information on the BBS, call

the GPSIC watchstander at (703) 313–5900.

FOR FURTHER INFORMATION CONTACT: LTJG Randy Navarro, Radionavigation Division, (202) 267–1058.

SUPPLEMENTARY INFORMATION:

Request for Comments

Copies of the Programmatic Environmental Assessment (EA) and Finding of No Significant Impact (FONSI) are available as described under **ADDRESSES**. The Coast Guard encourages interested persons to comment on these documents. The Coast Guard may revise these documents in view of the comments. If revisions are warranted, availability of the revised documents will be announced by a later notice in the **Federal Register**.

Background

As required by Congress, the Coast Guard is preparing to install the equipment necessary to implement the Differential Global Positioning System (DGPS) service in the northeastern United States. DGPS is a new radionavigation service that improves upon the 100 meter accuracy of the existing Global Position System (GPS) to provide an accuracy of better than 10 meters. For vessels, this degree of accuracy is critical for precise electronic navigation in harbors and harbor approaches and will reduce the number of vessel groundings, collisions, personal injuries, fatalities, and potential hazardous cargo spills resulting from such incidents.

After extensive study, the Coast Guard has selected six sites along the northeast Atlantic coastline for the DGPS equipment. The sites are in the vicinity of Bass Harbor Head, ME; Portsmouth Harbor, NH; Chatham, MA; Montauk Point, NY; Sandy Hook, NJ; and Cape Henlopen, DE. The sites are used already for radionavigational purposes and were chosen, in part, because their proposed use is consistent with their past and present use, thus minimizing further impact on the environment. DGPS signal transmissions will be broadcast in the marine radiobeacon frequency band (283.5 to 325 KHz) using less than 25 watts (effective radiated power). Signal transmissions at these low frequency and power levels have not been found to be harmful to the surrounding environment.

Proposed Installations at Each Site

(a) Radiobeacon Antenna

The Coast Guard proposes to use either an existing antenna or install a 90 foot guyed antenna with an accompanying ground plane. A ground plane for this 90 foot antenna consists of approximately 120 copper radials (6 gauge copper wire) installed 6 inches (or less) beneath the soil and projecting outward from the antenna base. The optimum radial length is 300 feet, but this length may be shortened to fit within property boundaries. Whenever possible, a cable plow method will be used in the radial installation to minimize soil disturbance. Installation of the ground plane may require some clearing of trees and bushes on the site.

(b) DGPS Antennas

Each site will require two 10 foot masts to support four small (4 inches by 18 inches diameter) receiving antennas. The masts will be installed on a concrete foundation measuring approximately 3 feet by 3 feet by 15 inches. The antennas support the primary and backup reference receivers and integrity monitors. The location of the two masts will be in the vicinity of the electronic equipment building or hut, but at least 50 feet to 100 feet from existing structures. At Portsmouth Harbor, NH, and Cape Henlopen, DE, mast height must be increased to approximately 40 feet to ensure that the visibility of satellites is not blocked by existing structures.

(c) Equipment Shelter

Existing radiobeacon equipment shelters will be used to house the DGPS equipment.

(d) Utilities

The Coast Guard proposes to use available commercial power as the primary source for the electronic equipment. However, existing diesel generators are available at each of the proposed sites, if backup power is needed. A telephone line will be required at each site for remote monitoring and operation.

Description of Each Site

The Bass Harbor Head, ME, site is located in the vicinity of the Acadia National Park. In the course of data collection, significant questions were raised on this site concerning the impact on visitors to the Acadia National Park and land ownership. The Coast Guard determined that additional study is needed to examine these issues. Therefore, a separate environmental analysis concerning site selection will be developed.

The Portsmouth Harbor, NH, site is located at the Portsmouth Harbor lighthouse, situated near the town of New Castle, NH. The Portsmouth Harbor lighthouse is listed in the National Register of Historic Places. The Coast Guard and NH State Historic Preservation Officer (SHPO) agree that the proposed project will have no effect on the historic property. There is an existing radiobeacon in operation at this site that has been modified as a prototype DGPS site for test and evaluation purposes. DGPS electronic equipment will be housed in an existing structure. The existing radiobeacon antenna will be used.

The Chatham, MA, site is located at the Chatham lighthouse, situated near the town of Chatham, MA. The Chatham lighthouse is listed in the National Register of Historic Places. The Coast Guard and MA SHPO agree that the proposed project will have no adverse effect on the historic property. There is an existing radiobeacon in operation at this site. DGPS electronic equipment will be housed in the existing structure. The existing radiobeacon antenna will be used.

The Montauk Point, NY, site is adjacent to the Montauk Point lighthouse, which is listed in the National Register of Historic Places and is located at the northeast point of Long Island. The Coast Guard and NY SHPO agree that the proposed project will have no effect on the historic property. There is an existing radiobeacon in operation at this site that has been modified as a prototype DGPS site for test and evaluation purposes. DGPS electronic equipment will be housed in the existing equipment hut. The existing radiobeacon antenna will be used.

The Sandy Hook, NJ, site is located approximately 5 miles north of Highland, NJ, at USCG Group Sandy Hook. The site is in the Fort Hancock and Sandy Hook Proving Ground Historic Landmark District. The Coast Guard and NJ SHPO agree that the proposed project will have no effect on the historic property. This site has been used for navigational operations in the past and, as a result, has much of the infrastructure in place. The DGPS transmitting equipment will be housed in an existing equipment building. The 90 foot guyed transmit antenna and ground plane will be erected on the site of a previous antenna.

The Cape Henlopen, DE, site is located within the Cape Henlopen State Park near the towns of Lewes and North Shores, DE. The Coast Guard and DE SHPO agree that the proposed project will have no adverse effect on possible historic WWII Army bunkers at the site. There is an existing radiobeacon in operation at this site that has been modified as a prototype DGPS site for test and evaluation purposes. DGPS electronic equipment will be housed in

the existing equipment hut. The existing whip antenna will be replaced with a 90 foot guyed antenna and ground plane.

Implementation of a DGPS service in the Northeast Atlantic Region is determined to have no significant effect on the quality of the human environment or require preparation of an Environmental Impact Statement.

Dated: May 11, 1994.

R.C. Houle,

Acting Chief, Office of Navigation Safety and Waterway Services.

[FR Doc. 94–11978 Filed 5–16–94; 8:45 am]

BILLING CODE 4910–14–M

[CGD 94–031]

Unified Command and Incident Command System

AGENCY: Coast Guard, DOT.

ACTION: Notice of meeting; clarification.

SUMMARY: This notice is a correction to the notice that appeared in the April 28, 1994, **Federal Register** concerning a workshop to be held on May 20, 1994, in Alexandria, Virginia. The workshop will address general issues relating to unified command and the Incident Command System, as they have been practiced, and relate these concepts, generally, to the oil spill area planning process. This notice clarifies the purpose of the workshop.

DATES: The public workshop will be held on May 20, 1994, from 9 a.m. to 4 p.m.

ADDRESSES: The public workshop will be held at the Best Western Old Colony Inn, 625 1st Street, Alexandria, Virginia.

FOR FURTHER INFORMATION CONTACT: LCDR Rhae Giacoma, Office of Marine Safety, Security and Environmental Protection (G–MEP–4), (202) 267–2616.

SUPPLEMENTARY INFORMATION: The Coast Guard and the Environmental Protection Agency (EPA) are co-sponsoring a workshop on the unified command and Incident Command System on May 20, 1994, in Alexandria, Virginia. The Coast Guard and EPA announced the workshop in the April 28, 1994, **Federal Register** Notice (59 FR 22043).

The intent of the workshop is to address general issues relating to unified command and the Incident Command System, as they have been practiced, and relate these concepts, generally, to the oil spill area planning process. Neither the Coast Guard nor the EPA consider the meeting to be a reopening of the comment period on the October 22, 1993, proposed revisions to the National Oil and Hazardous Materials Pollution Contingency Plan or NCP (40 CFR part 300; 58 FR 54702). The meeting will not address specific issues related to the NCP revisions.

As stated in the April 28, 1994, FR notice, many EPA and Coast Guard On-Scene Coordinators, in guiding the Area Committees in the development of Area Contingency Plans, are outlining detailed response structures. Several Area Committees are investigating the possibility of incorporating one of the fire fighting-based Incident Command Systems into the response structure outlined in Area Contingency Plans. Some of those involved in the process have raised questions regarding the best system for oil and hazardous substances spill response. To address these issues, the Coast Guard and EPA have decided to hold a public workshop as a forum for discussing how various response structures relate to oil and hazardous substance spill response.

Dated: May 11, 1994.

J.F. McGowan,

Captain, U.S. Coast Guard, Acting Chief, Office of Marine Safety, Security and Environmental Protection.

[FR Doc. 94–11979 Filed 5–16–94; 8:45 am]

BILLING CODE 4910–14–M

National Highway Traffic Safety Administration

[Docket No. 94–38; Notice 1]

Chrysler Corporation; Receipt of Petition for Determination of Inconsequential Noncompliance

The Chrysler Corporation (Chrysler) of Auburn Hills, Michigan, has determined that some of its vehicles fail to comply with the outside mirror requirements of 49 CFR 571.111, Federal Motor Vehicle Safety Standard (FMVSS) No. 111, "Rearview Mirrors," and has filed an appropriate report pursuant to 49 CFR Part 573, "Defect and Noncompliance Reports." Chrysler has also petitioned to be exempted from the notification and remedy requirements of the National Traffic and Motor Vehicle Safety Act (15 U.S.C. 1381 *et seq.*) on the basis that the noncompliance is inconsequential as it relates to motor vehicle safety.

This notice of receipt of a petition is published under Section 157 of the National Traffic and Motor Vehicle Safety Act (15 U.S.C. 1417) and does not represent any agency decision or other exercise of judgment concerning the merits of the petition.

In FMVSS No. 111, paragraph S7.1 states that trucks with gross vehicle weight rating (GVWR) of more than 10,000 pounds shall have outside mirrors of unit magnification.

During the 1989 through early-1994 model years, Chrysler manufactured an estimated total of 26,700 Dodge Ram 350 and 3500 pickup trucks and cab/chassis with convex, passenger-side, outside, rearview mirrors.

Chrysler supports its petition for inconsequential noncompliance with the following. (Chrysler also submitted two figures which compared the fields of view of the noncompliant mirrors to two types of complaint mirrors. This material is available in the NHTSA docket.)

(1) The affected vehicles are also equipped with a driver side outside rear view mirror of unit magnification and, except for the less than 100 cab/chassis models, an inside rear view mirror of unit magnification.

(2) The installed 6″×9″ convex passenger side mirror meets all requirements of S5 of FMVSS 111 [passenger car requirements], and provides increased field of view capability when compared to the same size mirror of unit magnification or the optional 10″×7″ unit magnification mirror.

(3) Other than the passenger side mirror being convex rather than unit magnification, the rear view mirror system on the affected vehicles meets or exceeds all performance and location requirements of FMVSS 111. The system capability is adequate in all regards, specifically including provision for both overall system and passenger side field of view.

(4) Chrysler is not aware of any owner complaints, field reports or allegations of hazardous circumstances relating to performance of the passenger side mirror on the affected vehicles.

(5) The subject condition occurred as the result of the upgrading of a model for the 1989 model year to more than 10,000 pounds GVWR. That model for prior model years had been equipped with a convex passenger side mirror and unit magnification driver side and inside rear view mirrors. The same mirror system was carried over on the vehicles for which the GVWR was upgraded. Rear view adequacy of the convex mirror was not affected by the GVWR increase, and the need to instead release a unit magnification mirror for compliance to the FMVSS 111 requirement at the upgraded GVWR was inadvertently overlooked at the time and thereafter.

(6) From a practical vehicle operation and motor vehicle safety standpoint, the mirror system which fully compiled to all FMVSS 111 requirements on earlier model year vehicles was equivalently effective and capable on the upgraded GVWR vehicles.

(7) Existence of the variance was detected during an engineering analysis resulting from a question of mirror size adequacy on certain 1994 subject models. Size was determined to not be a concern, but the analysis uncovered the convex mirror issue. Chrysler than took immediate, expedited action to correct the condition by specifying and installing the optional 10″×7″ unit magnification mirrors on affected vehicles.

Chrysler summarizes its rationale for granting its petition with the following.

Existence of the subject condition was totally inadvertent and not a deliberate attempt to evade Federal Motor Vehicle Safety Standard requirements. Therefore, in spite of good faith and due care efforts by Chrysler, some vehicles with a GVWR of more than 10,000 pounds were manufactured and shipped with a convex passenger side outside rear view mirror. Upon discovery of the condition, Chrysler took immediate action to correct it in production and minimize the number of vehicles produced with the convex mirror.

Interested persons are invited to submit written data, views, and arguments on the petition of Chrysler, described above. Comments should refer to the docket number and be submitted to: Docket Section, National Highway Traffic Safety Administration, room 5109, 400 Seventh Street, SW., Washington, DC 20590.

All comments received before the close of business on the closing date indicated below will be considered. The application and supporting materials, and all comments received after the closing date will also be filed and will be considered to the extent possible. When the petition is granted or denied, the notice will be published in the **Federal Register** pursuant to the authority indicated below.

Comment closing date: June 16, 1994.

(15 U.S.C. 1417; delegations of authority at 49 CFR 1.50 and 49 CFR 501.8)

Issued on: May 11, 1994.

Barry Felrice,

Associate Administrator for Rulemaking.

[FR Doc. 94–11921 Filed 5–16–94; 8:45 am]

BILLING CODE 4910–59–M

Sunshine Act Meetings

Federal Register
Vol. 59, No. 94
Tuesday, May 17, 1994

This section of the FEDERAL REGISTER contains notices of meetings published under the "Government in the Sunshine Act" (Pub. L. 94-409) 5 U.S.C. 552b(e)(3).

U.S. CONSUMER PRODUCT SAFETY COMMISSION

TIME AND DATE: Wednesday, May 19, 1994.

LOCATION: Room 420, East West Towers, 4330 East West Highway, Bethesda, Maryland

STATUS: Open to the Public

MATTERS TO BE CONSIDERED:

1. Five Gallon Buckets

The Commission will consider issues related to the safety of five gallon buckets.

2. Mid-Year Review

The staff will brief the Commission on issues related to fiscal year 1994 mid-year review.

For a recorded message containing the lastest agenda information, call (301) 504-0709

CONTACT PERSON FOR ADDITIONAL INFORMATION: Sheldon D. Butts, Office of the Secretary, 4330 East West Highway., Bethesda, MD 20207 (301) 504-0800.

Dated: May 12, 1994.

Sheldon D. Butts,

Deputy Secretary.

[FR Doc. 94-12086 Filed 5-13-94; 1:19 pm]

BILLING CODE 6355 5-13-94-M

FEDERAL COMMUNICATIONS COMMISSION

FCC To Hold Open Commission Meeting, Thursday, May 19, 1994

The Federal Communications Commission will hold an Open Meeting on the subjects listed below on Thursday, May 19, 1994, which is scheduled to commence at 9:30 a.m., in Room 856, at 1919 M Street, NW., Washington, DC.

Item No. Bureau, and Subject

1—Common Carrier—Title: Integration of Rates and Services for the Provision of Communications by Authorized Common Carriers between the Contiguous States and Alaska, Hawaii, Puerto Rico (CC Docket No. 83-1376, RM-4436. Summary: The Commission will consider the recommendations of the Alaska Joint Board in the Final Recommended Decision.

2—Common Carrier—Title: Billed Party Preference for O+ InterLATA Calls (CC Docket No. 92-77). Summary: The Commission will consider action on its Notice of Proposed Rulemaking regarding billed party preference.

3—Common Carrier—Title: Expanded Interconnection with Local Telephone Company Facilities (CC Docket No. 91-141, Transport Phase II). Summary: The Commission will consider action on its Notice of Proposed Rulemaking regarding signalling information.

4—Cable Services—Title: Implementation of Section 19 of the Cable Television Consumer Protection and Competition Act of 1992—Annual Assessment of the Status of Competition in the Market for the Delivery of Video Programming. Summary: The Commission will consider how to gather information and data that will enable the Commission to write its first analytical report to Congress on the current level of competition in the marketplace for the delivery of video programming.

5—Mass Media—Title: Review of the Commission's Rules Governing the Low Power Television Service (MM Docket No. 93-114). Summary: The Commission will consider changes in the LPTV rules regarding the acceptance standard for new applications, terrain shielding policy and four-letter call signs.

This meeting may be continued the following work day to allow the Commission to complete appropriate action.

Additional information concerning this meeting may be obtained from Steve Svab, Office of Public Affairs, telephone number (202) 632-5050.

Federal Communications Commission.

William F. Caton,

Acting Secretary.

[FR Doc. 94-12068 Filed 5-13-94; 1:18 pm]

BILLING CODE 8712-01-M

BOARD OF GOVERNORS OF THE FEDERAL RESERVE SYSTEM

TIME AND DATE: 11:00 a.m., Monday, May 23, 1994.

PLACE: Marriner S. Eccles Federal Reserve Board Building, C Street entrance between 20th and 21st Street, N.W., Washington, D.C. 20551.

STATUS: Closed.

MATTERS TO BE CONSIDERED:

1. Personnel actions (appointments, promotions, assignments, reassignments, and salary actions) involving individual Federal Reserve System employees.

2. Any items carried forward from a previously announced meeting.

CONTACT PERSON FOR MORE INFORMATION: Mr. Joseph R. Coyne, Assistant to the Board; (202) 452-3204. You may call (202) 452-3207, beginning at approximately 5 p.m. two business days before this meeting, for a recorded announcement of bank and bank holding company applications scheduled for the meeting.

Dated: May 13, 1994.

William W. Wiles,

Secretary of the Board.

[FR Doc. 94-12141 Filed 5-13-94; 3:43 am]

BILLING CODE 6210-01-P

NATIONAL TRANSPORTATION SAFETY BOARD

TIME AND PLACE: 9:30 a.m., Tuesday, May 24, 1994.

PLACE: The Board Room, 5th Floor, 490 L'Enfant Plaza, S.W., Washington, D.C. 20594.

STATUS: Open.

MATTERS TO BE CONSIDERED:

6250A—Aviation Accident Report: Controlled Collision With Terrain, Express Airlines II, Inc., dba Northwest Airlink Flight 5719, Jetstream BA-3100, Hibbing, Minnesota, December 1, 1993.

5745B—"Most Wanted" Safety Recommendations Program Status Report and Suggested Modifications.

NEWS MEDIA CONTACT: Telephone: (202) 382-0660.

FOR MORE INFORMATION CONTACT: Bea Hardesty, (202) 382-6525.

Dated: May 13, 1994.

Bea Hardesty,

Federal Register Liaison Officer.

[FR Doc. 94-12100 Filed 5-13-94; 1:20 pm]

BILLING CODE 7533-01-P

NUCLEAR REGULATORY COMMISSION

DATE: Weeks of May 16, 23, 30, and June 6, 1994.

PLACE: Commissioners' Conference Room, 11555 Rockville Pike, Rockville, Maryland.

STATUS: Public and Closed.

MATTERS TO BE CONSIDERED:

Week of May 16

Friday, May 20

10:00 a.m.
Briefing on Status of Thermo-Lag (Public Meeting)
(Contact: Ashok Thadani, 301-504-1274)

11:30 a.m.
Affirmation/Discussion and Vote (Public Meeting)
a. Minor Procedural Rule Change on Time for Requesting a Hearing Under Part 2, Subpart L
(Contact: Peter Crane, 301-504-1622)
b. Final Rule: Uranium Mill Tailings Regulations; Conforming NRC Requirements to EPA Standards

(Contact: Catherine Mattsen, 301–492–3638)

1:00 p.m.

Briefing by Nuclear Safety Research Review Committee (NSRRC) (Public Meeting)

(Contact: George Sege, 301–492–3904)

Week of May 23—Tentative

Wednesday, May 25

3:30 p.m.

Affirmation/Discussion and Vote (Public Meeting) (if needed)

Week of May 30—Tentative

There are no meetings scheduled for the Week of May 30.

Week of June 6—Tentative

Monday, June 6

10:00 a.m.

Briefing by DOE on HLW Program (Public Meeting)

(Contact: Linda Desell, 202–586–1462)

1:00 p.m.

Briefing on Proposed Rule on Radiological Criteria for Decommissioning (Public Meeting)

(Contact: Chip Cameron, 301–504–1642)

Wednesday, June 8

10:00 a.m.

Briefing on Electricity Forecast from Energy Information Administration (EIA) Annual Energy Outlook (Public Meeting)

(Contact: Mary Hutzler, 202–586–2222)

Thursday, June 9

10:00 a.m.

Briefing on Review of Rulemaking Process (Public Meeting)

(Contact: William Olmstead, 301–504–1740)

11:30 a.m.

Affirmation/Discussion and Vote (Public Meeting) (if needed)

2:00 p.m.

Briefing on Final Rule for Protection Against Malevolent Use of Vehicles at Nuclear Power Plants—Part 73 (Public Meeting)

(Contact: Phillip McKee, 301–504–2933)

Friday, June 10

10:00 a.m.

Briefing on Proposed Rule for License Renewal—Part 54 (Public Meeting)

(Contact: William Travers, 301–504–1117)

2:00 p.m.

Discussion of Nuclear Safety and Safeguards in the Former Soviet Union (Closed—Ex. 1)

Note: Affirmation sessions are initially scheduled and announced to the public on a time-reserved basis. Supplementary notice is provided in accordance with the Sunshine Act as specific items are identified and added to the meeting agenda. If there is no specific subject listed for affirmation, this means that no item has as yet been identified as requiring any Commission vote on this date.

The Schedule for Commission Meetings is subject to change on short notice. To verify the status of meetings call (Recording)—(301) 504–1292.

CONTACT PERSON FOR MORE INFORMATION: William Hill—(301) 504–1661.

Dated: May 13, 1994.

William M. Hill, Jr.,

SECY Tracking Officer, Office of the Secretary.

[FR Doc. 94–12147 Filed 5–13; 3:44 pm]

BILLING CODE 7590–01–M

NOTICE OF MEETING

Notice is hereby given in accordance with Section 552b of Title 5, United States Code, that a meeting of the Blackstone River Valley National Heritage Corridor Commission will be held on Thursday, May 19, 1994.

The Commission was established pursuant to Public Law 99–647. The purpose of the Commission is to assist Federal, State and local authorities in the development and implementation of an integrated resource management plan for those lands and waters within the Corridor.

The meeting will convene at 7:00 p.m. at Millbury Town Hall, 127 Main Street, Millbury, MA, for the following reasons:

Agenda

1. Call to Order.
2. Town of Millbury Presentation
3. Department of Environment Presentation
4. Public Questions.
5. Adjournment.

It is anticipated that about twenty people will be able to attend the session in addition to the Commission members.

Interested persons may make oral or written presentations to the Commission or file written statements. Such requests should be made prior to the meeting to:

James R. Pepper, Executive Director, Blackstone River Valley National Heritage Corridor Commission, P.O. Box 730, Uxbridge, MA 01569, Tel.: (508) 278–9400

Further information concerning this meeting may be obtained from James R. Pepper, Executive Director of the Commission at the aforementioned address.

James R. Pepper,

Executive Director.

[FR Doc. 94–12125 Filed 5–13–94; 4:34 pm]

BILLING CODE 4310–70–M

Corrections

Federal Register
Vol. 59, No. 94
Tuesday, May 17, 1994

This section of the FEDERAL REGISTER contains editorial corrections of previously published Presidential, Rule, Proposed Rule, and Notice documents. These corrections are prepared by the Office of the Federal Register. Agency prepared corrections are issued as signed documents and appear in the appropriate document categories elsewhere in the issue.

DEPARTMENT OF ENERGY

Federal Energy Regulatory Commission

[Docket No. CP94-385-000]

Koch Gateway Pipeline Company, et al.; Request Under Blanket Authorization

Correction

In notice document 94-10772 appearing on page 23199 in the issue of Thursday, May 5, 1994, the docket number should read as set forth above.

BILLING CODE 1505-01-D

DEPARTMENT OF ENERGY

Federal Energy Regulatory Commission

[Docket No. RP85-39-017]

Wyoming Interstate Co., Ltd; Proposed Changes in FERC Gas Tariff

Correction

In notice document 94-8306 beginning on page 16641 in the issue of Thursday, April 7, 1994, the document number should read as set forth above.

BILLING CODE 1505-01-D

DEPARTMENT OF HOUSING AND URBAN DEVELOPMENT

Office of the Secretary

24 CFR Part 888

[Docket No. N-3741; FR-3686-N-01]

Section 8 Housing Assistance Payments Program—Contract Rent Annual Adjustment Factors

Correction

In rule document 94-9886 beginning on page 21832 in the issue of Tuesday, April 26, 1994, make the following correction:

On page 21864, after the illustration, the file line should have read as set forth below:

[FR Doc. 94-9886 Filed 4-25-94; 8:45 am]

BILLING CODE 4210-32-P

BILLING CODE 1505-01-D

SECURITIES AND EXCHANGE COMMISSION

[Release No. 34-33934; File No. SR-NYSE-94-15]

Self-Regulatory Organizations; Notice of Filing of Proposed Rule Change by the New York Stock Exchange, Inc., Relating to Restructuring Companies Portfolio Market Index Target-Term Securities

Correction

In notice document 94-10088 beginning on page 22040 in the issue of Tuesday, April 28, 1994, make the following correction:

On page 22042, in the first column, just before the FR Doc. line, insert the following:

Margaret H. McFarland,

Deputy Secretary.

BILLING CODE 1505-01-D

federal register

Tuesday
May 17, 1994

Part II

Department of Agriculture

Agricultural Marketing Service

7 CFR Part 201

Amendments to Regulations Under the Federal Seed Act; Proposed Rule

DEPARTMENT OF AGRICULTURE

Agricultural Marketing Service

7 CFR Part 201

[No. LS–91–010 PR]

RIN 0581–AA52

Amendments to Regulations Under the Federal Seed Act

AGENCY: Agricultural Marketing Service, USDA.

ACTION: Proposed rule.

SUMMARY: The Agricultural Marketing Service (AMS) is proposing to revise the Federal Seed Act by changing the common and botanical names of several agricultural and vegetable seeds; adding several kinds to the list of agricultural and vegetables seeds subject to the Federal Seed Act; changing germination evaluation descriptions; changing the method of fluorescence use in determining pure seed percentages in ryegrasses; adding methods for testing coated seed; adding methods for determining the presence of fungal endophyte in seeds; and updating the standards for certified seed. These changes would result in the adoption of scientific names currently recognized by the scientific community and would provide for the use of common names most widely acceptable in seed trade. They would also eliminate potential conflicts between State and Federal regulations which could inhibit the interstate movement of seeds.

DATES: Public Hearing June 8, 1994, 10 a.m.; comments must be received on or before July 8, 1994.

ADDRESSES: Interested persons are invited to submit written comments concerning this proposed rule. Comments must be sent to James P. Triplitt, Chief, Seed Regulatory and Testing Branch, Livestock and Seed Division, AMS, USDA, Building 506, BARC–E, Beltsville, Maryland 20705. Comments will be available for public inspection during regular business hours in Building 506, BARC–E, Beltsville, Maryland. The public hearing will be held on June 8, 1994, at 10 a.m. in room 3501, South Building, United States Department of Agriculture, 14th and Independence Avenue, SW., Washington, DC.

FOR FURTHER INFORMATION CONTACT: James P. Triplitt, Chief, Seed Regulatory and Testing Branch, 301–504–9430.

SUPPLEMENTARY INFORMATION: This rule has been determined to be not-significant for purposes of Executive Order 12866 and therefore has not been reviewed by OMB.

The proposed rule has been reviewed under Executive Order 12778, Civil Justice Reform. It is not intended to have a retroactive effect. The rule would not preempt any State or local laws, regulations, or policies unless they present an irreconcilable conflict with this rule. There are no administrative procedures which must be exhausted prior to judicial challenge to the provision of this rule. The Administrator, Agricultural Marketing Service (AMS), has certified that this action would not have a significant impact on a substantial number of small entities as defined in the Regulatory Flexibility Act. Many small entities sell seed. However, small entities selling seed must test and label the seed to comply with the requirements of state laws. Generally the testing requirements of the state laws are similar to those of the Federal Seed Act (FSA). These changes would further reconcile State and Federal testing procedures. Using similar testing procedures would reduce the burden on small entities shipping seed in interstate commerce because the test used for intrastate commerce could also be used in interstate commerce. Some additional burden might occur concerning small entities shipping kinds which are added to those subject to the FSA. However, many small entities are likely to benefit because more small entities are purchasers of those kinds than sellers. The small entity purchasers would benefit from the regulations in that the interstate shipper would be required to test and label the kinds before shipping them to the purchaser. There would be no effect on the competitive position of small entities in relation to larger entities since both would have to comply with the same regulations.

This document does not contain new collection of information requirements. Sections which would be amended by the rule contain collection of information requirements that were previously submitted for review to the Director of Management and Budget (OMB) and assigned OMB control number 0581–0026 under the Paperwork Reduction Act of 1980 (44 U.S.C. 3501 *et seq.*).

Background

Seed Testing and Labeling

This document would update the FSA regulations pertaining to seed testing to eliminate differences between the FSA regulations and the Association of Official Seed Analysts (AOSA) Rules for Testing Seed. The Association is made up of State and Federal seed testing agencies. Its function is to develop and standardize methods to be used in testing seeds. These rules are widely recognized and are used by most state and commercial seed laboratories to test seed in the United States. In addition, common and scientific names are updated.

Agricultural and vegetable seeds shipped in interstate commerce must comply with the FSA and the regulations issued thereunder. The FSA requires seed to be labeled with certain information concerning its quality when moving across state lines. Once in a state, seed must comply with state laws and regulations. Labeling requirements in State and Federal laws are generally very similar so as not to inhibit the free movement of seed. Tests used prior to shipment to determine the required labeling information, as well as tests used by state seed regulatory agencies to check compliance, are generally performed using AOSA rules. Tests to assure that seed is in compliance with the FSA are performed using methods specified in the FSA regulations. Although the testing methods under the FSA regulations and those of AOSA are generally very similar, some changes have been made in the AOSA Rules For Testing Seed without corresponding changes in the FSA regulations. The changes to the AOSA rules were based on scientific research and were made with input from AMS. This document would amend the FSA seed testing regulations so that they are essentially the same as those contained in the AOSA rules. This would eliminate the need to perform separate tests to assure that seed labeling complies with both Federal and State laws. It would also facilitate seed trade and reduce cost to the seed industry and to seed buyers. These changes reflect improvements in seed testing technology and the current standards of usage within the industry. The specific changes to the testing rules are discussed under "Other Proposed Amendments."

Additional Kinds

There are presently about a dozen kinds (mostly grasses) which are being shipped interstate that are not subject to the FSA. Cooperating state seed regulatory agencies have requested that the list of kinds subject to the FSA be kept current so that interstate shipments of those kinds can be regulated. Occasionally complaints are received on these kinds. For that reason the proposal would add these kinds to the regulations under the FSA and thereby make them subject to Federal law. Bluejoint, galletagrass, bottlebrush-squirreltail, green needlegrass, kenaf, forage kochia, mountain rye,

intermediate ryegrass, northern sweetvetch, and basin wildrye would be added to the list of agricultural seeds subject to the FSA. Dill, sage, and summer savory would be added to the list of vegetable seeds subject to the FSA. Standardized test methods have been developed for the kinds to be added and they are currently covered by AOSA rules and are being regulated by the states. Therefore, this addition would result in little cost to the seed industry. Currently they can be shipped in interstate commerce without having to be labeled by the interstate shipper. If shipped without the required labeling, the responsibility for testing and labeling falls on the person receiving the seed rather than the interstate shipper.

Scientific Names

Changes to § 201.2 would update scientific names for the agricultural seeds colonial bentgrass, sand bluestem, soft chess, emmer, hard fescue, kudzu, Korean lespedeza, striate lespedeza, Japanese millet, pearl millet, rescuegrass, sorghum-sudangrass, sudangrass, turf timothy, velvetbean, beardless wheatgrass, intermediate wheatgrass, pubescent wheatgrass, Siberian wheatgrass, slender wheatgrass, streambank wheatgrass, tall wheatgrass, western wheatgrass, and Russian wildrye. The scientific names for the vegetable seeds tronchuda cabbage, leek, and rhubarb would also be updated. The document would change the scientific names to those currently recognized by the scientific community and to be in agreement with the names used by the USDA Germplasm Resources Information Network.

At the request of growers, researchers, and breeders the document would change the kind name "muskmelon" to "melon," because "melon" is the more widely recognized name.

Seed Certification Standards

The rule would also update the FSA regulations pertaining to seed certification to eliminate differences with the standards of the Association of Official Seed Certifying Agencies (AOSCA). This Association is made up primarily of State seed certifying agencies. The function of AOSCA is to establish minimum standards for genetic purity and to standardize seed certification regulations and procedures. State seed certifying agencies recognize and follow minimum standards for genetic purity established by AOSCA.

Seed represented as a class of certified seed as defined in the FSA regulations, must meet the minimum genetic certification standards for certified classes as provided by the regulations. State seed certifying agencies which certify seed pursuant to the standards contained in the FSA regulations, are members of AOSCA and must also maintain minimum AOSCA standards for certifying seed. This document would change the FSA regulations pertaining to genetic certification standards in order to bring them in conformity with the AOSCA Standards. The changes to the standards have been reviewed and found to be consistent with the requirements under the FSA.

Corrections and Clarifications

There are a number of technical nonsubstantive corrections and clarifications which would also be made. Some of the more important ones would change "Consumer and Marketing Service" to "Agricultural Marketing Service" and omit the word "hybrid" from the name "sorghum-sudangrass". In § 201.36b the word "pole" would be enclosed in parentheses. In § 201.36c the word "garden" would be added to bean to show the correct kind name. Section 201.34(d) would be changed to add a footnote to reflect the effective date which was previously omitted. Paragraph (e) of this section would be removed to delete partial lists of variety names.

Other Proposed Amendments.

Changes to § 201.2 would redefine the Act to include 7 U.S.C 1551–1611, update scientific names, and add additional kinds as discussed above. Changes would also add a definition of coated seed and change the definition of certified seed to show the proper reference, § 201.70, rather than § 201.79 which does not exist. Section 201.22(c) would be changed to update scientific names to be consistent with changes in § 201.2(h). Section 201.31 would be changed to establish germination standards for dill, sage, and summer savory which were added to the list of vegetable seeds subject to the FSA in § 201.2(i), and to reflect the change of the name "muskmelon" to "melon".

Section 201.36c would be changed to separate and alphabetize agricultural seeds and vegetable seeds in the table, and to change "bean" in the vegetable list to "garden bean," the name recognized in § 201.2(i). Section 201.43 would be changed to add metric equivalents weights and to specify the minimum number of coated seeds to be taken during sampling.

Section 201.46(b) would be changed to substitute the word "comprise" for the incorrect word "compromise". Table 1 would be changed to reflect the changes proposed in § 201.2. Scientific names would be changed to correspond with § 201.2 and working weights added for those kinds added in that section. In addition, several spelling errors would be corrected.

The document would change several sections to add provisions for testing coated seed. Specific procedures have been developed to provide for uniform methods to test seed coated with products such as those designed to improve planting characteristics or to improve seedling growth. Section 201.2 would add a definition of coated seed. Section 201.45 would add comments pertaining to dividing coated seed. Section 201.47 would cite added instructions for purity analysis of coated seed. Section 201.51b would establish purity testing procedures for coated seed. Section 201.52 would be changed to add a new paragraph (b) to establish the amount of seed to be examined for a noxious-weed seed test on coated seed. The existing § 201.52 would become paragraph (a).

Section 201.47a would also be changed to clarify that the "entire spikelet" for rice, browntop millet, and Paspalum spp. is considered to be a seed unit; to define a seed unit for galletagrass (a new kind which was added in § 201.2); to include side-oats grama and blue grama, as kinds for which the Uniform Blowing Procedure is used to determine the percentages of pure seed and inert matter; and to clarify that "seed balls" of other Chenopodiaceae (fourwing saltbush and forage kochia) are to be considered a seed unit.

Section 201.48 would be changed to update seed unit interpretations to be consistent with § 201.51, to make scientific names to be consistent with § 201.2, and to add procedures to determine pure seed of forage kochia which was added to the kinds subject to the FSA.

Sections 201.48, 201.49, and 201.51a would be changed, in part, to add tall wheatgrass and western wheatgrass to the list of kinds to be tested using the Multiple Unit Procedure. These kinds contain multiple florets. The Multiple Unit Procedure provides faster, more consistent test results without a loss of accuracy when compared to the current, more tedious, hand method.

Several sections, including some of the changes to § 201.47, § 201.48, § 201.49, and § 201.51a would add blue grama and side-oats grama to the kinds for which the purity percentages are determined by using the Uniform Blowing Procedure. The Uniform Blowing Procedure provides a method, for determining purity percentages for

these kinds, which has proven to be faster, more consistent, and just as accurate as the hand method.

Section 201.50 would be changed to clarify that wild onion and wild garlic bulblets devoid of husks are to be classified as weed seeds if not damaged at the basal end and are a specified size. Research has shown that these seeds would likely germinate.

Section 201.51 would update seed units that are considered to be inert matter, to include classification of certain seed units of newly added kinds, forage kochia and northern sweetvetch, as well as coating material.

Sections 201.56 through 201.56–12 would be changed to establish new procedures for describing abnormal seedlings of each seed group for use in determining germination percentages and to eliminate references to outdated photographs. Seedling descriptions which had been developed over many years are being completely revised so that consistent, current terminology is used to describe abnormal seedlings for all kinds. The changes are designed to make the seedling descriptions more easily interpreted so that more consistent, accurate test results will be achieved. The changes will not result in significant differences in the percentages of germination found when compared to tests made under the current regulations.

Changes to § 201.57 would add kenaf, a new kind, to the list of kinds containing hard seed.

Section 201.57a would be changed to correct scientific names to be consistent with § 201.2 and to add new kinds, bottlebrush-squirreltail, basin wildrye, galletagrass, mountain rye, johnsongrass, and forage kochia to the kinds having dormant seed.

Section 201.58 would be changed to clarify the definition of "prechill" applicable to Table 2, to make editorial changes in special procedures for alyceclover, bahiagrass, beet, and garden bean, and to add special procedures for green needlegrass. Changes would incorporate more specific information on the type of light to be used for ryegrass fluorescence tests, add germination procedures for coated seed, and correct common and scientific names in the section including Table 2. Germination test procedures for those kinds added in §§ 201.2(h) and 201.2(i) would be added, and references to outdated photographs of seedlings removed. The changes in testing procedures incorporate into the regulations the latest research on testing these kinds.

Section 201.58a would be changed to revise the use of the fluorescence test for determining the percentages of pure seed and other crop seed of annual ryegrass and perennial ryegrass. The changes incorporate methods agreed on by AOSA, AASCO, the grass seed industry, and AMS. The procedure for determining percentages of white sweetclover and yellow sweetclover would be changed from a mottled seed test to chemical test because the chemical test provides a more accurate, consistent result. Procedures for the phenol test for wheat, previously cited in AOSA Handbook Number 28, are being added and the reference to AOSA Handbook Number 28 is being removed so that all information will be contained in the regulations removing the need to have a copy of Handbook Number 28. Procedures for conducting a peroxidase test for varietal purity of soybean, and to add fluorescence test procedures for determining varietal purity of oat are added. These procedures have been in use for many years and have proven to be accurate, reliable, and consistent. Tests are essential to check the accuracy of variety representations.

Section 201.58d would add established testing procedures for determining the percentage of fungal endophyte in seed and plant material growing therefrom to the regulations. Some grass seed is being labeled to indicate the presence or absence of fungal endophyte. Uniform testing procedures have been developed for determining the amount of fungal endophyte present.

Changes to § 201.60 would update scientific names as previously discussed, to add ryegrasses and galletagrass to the list of chaffy kinds, and to make editorial changes.

Changes to § 201.61 and § 201.62 would correct typographical errors in the tolerance table.

A change to § 201.76 would provide for the certification agency to grant a variance in the land cropping history in specific circumstances where cultural practices have been proven adequate to maintain genetic purity. Generally this change would allow for the agency to modify the number of years the field must have been free of potential contaminants before being planted to a crop under certification. Section 201.76 would also be changed to update Table 5 and the footnotes to Table 5 to include metric equivalents, to update names to be consistent with § 201.2, and to make editorial changes and corrections. Standards for chemically assisted hybrid barley, buckwheat, and chemically assisted hybrid wheat would be added. Field standards for classes of mung bean would be changed and a field standard for hybrid corn added. In addition footnotes are added corresponding to those changes in the table.

List of Subjects in 7 CFR Part 201

Advertising, Agricultural commodities, Imports, Labeling, Reporting and recordkeeping requirements, Seeds, Vegetables.

For reason set forth in the preamble, 7 CFR part 201 is amended as follows:

PART 201—FEDERAL SEED ACT REGULATIONS

1. The authority citation for part 201 continues to read as follows:

Authority: 7 U.S.C. 1592.

2. In § 201.2, paragraphs (a), (h), (i), and (ee) are revised and (q) is added to read as follows:

§ 201.2 Terms defined.

* * * * *

(a) *The Act.* The Term "Act" means the Federal Seed Act approved August 9, 1939 (53 Stat. 1275; 7 U.S.C. 1551–1611 as amended);

* * * * *

(h) *Agricultural seeds.* The term "agricultural seeds" means the following kinds of grass, forage, and field crop seeds, that are used for seeding purposes in the United States:

Agrotricum—x Agrotriticum Ciferri and Giacom.
Alfalfa—Medicago sativa L.
Alfilaria—Erodium cicutarium (L.) L'Her.
Alyceclover—Alysicarpus vaginalis (L.) DC.
Bahiagrass—Paspalum notatum Fluegge.
Barley—Hordeum vulgare L.
Barrelclover—Medicago truncatula Gaertn.
Bean, adzuki—Vigna angularis (Willd.) Ohwi and Ohashi.
Bean, field—Phaseolus vulgaris L.
Bean, mung—Vigna radiata (L.) Wilczek.
Beet, field—Beta vulgaris L. subsp. vulgaris.
Beet, sugar—Beta vulgaris L. subsp. vulgaris.
Beggarweed, Florida—Desmodium tortuosum (Sw.) DC.
Bentgrass, colonial—Agrostis capillaris L.
Bentgrass, creeping—Agrostis stolonifera L. var. palustris (Huds.) Farw.
Bentgrass, velvet—Agrostis canina L.
Bermudagrass—Cynodon dactylon (L.) Pers. var. dactylon.
Bermudagrass, giant—Cynodon dactylon (L.) Pers. var. aridus Harlan and de Wet.
Bluegrass, annual—Poa annua L.
Bluegrass, bulbous—Poa bulbosa L.
Bluegrass, Canada—Poa compressa L.
Bluegrass, glaucantha—Poa glaucantha Gaud.
Bluegrass, Kentucky—Poa pratensis L.
Bluegrass, Nevada—Poa nevadensis Scribn.
Bluegrass, rough—Poa trivialis L.
Bluegrass, Texas—Poa arachnifera Torr.
Bluegrass, wood—Poa nemoralis L.
Bluejoint—Calamagrostis canadensis (Michx.) Nutt.
Bluestem, big—Andropogon gerardii Vitm. var. gerardii.
Bluestem, little—Schizachyrium scoparium (Michx.) Nash.

Bluestem, sand—Andropogon gerardii Vitm. var. paucipilus (Nash) Fern.
Bluestem, yellow—Bothriochloa ischaemum (L.) Keng.
Bottlebrush-squirreltail—Elymus elymoides (Raf.) Swezey.
Brome, field—Bromus arvensis L.
Brome, meadow—Bromus biebersteinii Roem. and Schult.
Brome, mountain—Bromus marginatus Steudel.
Brome, smooth—Bromus inermis Leyss.
Broomcorn—Sorghum bicolor (L.) Moench.
Buckwheat—Fagopyrum esculentum Moench.
Buffalograss—Buchloe dactyloides (Nutt.) Engl.
Buffelgrass—Cenchrus ciliaris L.
Burclover, California—Medicago polymorpha L.
Burclover, spotted—Medicago arabica (L.) Huds.
Burnet, little—Sanguisorba minor Scop.
Buttonclover—Medicago orbicularis (L.) Bartal.
Canarygrass—Phalaris canariensis L.
Canarygrass, reed—Phalaris arundinacea L.
Carpetgrass—Axonopus affinis Chase.
Castorbean—Ricinus communis L.
Chess, soft—Bromus hordeaceus L.
Chickpea—Cicer arietinum L.
Clover, alsike—Trifolium hybridum L.
Clover, arrowleaf—Trifolium vesiculosum Savi.
Clover, berseem—Trifolium alexandrinum L.
Clover, cluster—Trifolium glomeratum L.
Clover, crimson—Trifolium incarnatum L.
Clover, Kenya—Trifolium semipilosum Fresen.
Clover, ladino—Trifolium repens L.
Clover, lappa—Trifolium lappaceum L.
Clover, large hop—Trifolium campestre Schreb.
Clover, Persian—Trifolium resupinatum L.
Clover, red or
Red clover, mammoth—Trifolium pratense L.
Red clover, medium—Trifolium pratense L.
Clover, rose—Trifolium hirtum All.
Clover, small hop or suckling—Trifolium dubium Sibth.
Clover, strawberry—Trifolium fragiferum L.
Clover, sub or subterranean—Trifolium subterraneum L.
Clover, white—Trifolium repens L. (also see Clover, ladino).
Clover—(also see Alyceclover, Burclover, Buttonclover, Sourclover, Sweetclover).
Corn, field—Zea mays L.
Corn, pop—Zea mays L.
Cotton—Gossypium spp.
Cowpea—Vigna unguiculata (L.) Walp. subsp. unguiculata.
Crambe—Crambe abyssinica R.E. Fries.
Crested dogtail—Cynosurus cristatus L.
Crotalaria, lance—Crotalaria lanceolata E. Mey.
Crotalaria, showy—Crotalaria spectabilis Roth.
Crotalaria, slenderleaf—Crotalaria brevidens Benth. var. intermedia (Kotschy) Polh.
Crotalaria, striped or smooth—Crotalaria pallida Ait.
Crotalaria, sunn—Crotalaria juncea L.
Crownvetch—Coronilla varia L.
Dallisgrass—Paspalum dilatatum Poir.
Dichondra—Dichondra repens Forst. and Forst. f.
Dropseed, sand—Sporobolus cryptandrus (Torr.) A. Gray.
Emmer—Triticum dicoccon Schrank.
Fescue, chewings—Festuca rubra L. subsp. commutata Gaud.
Fescue, hair—Festuca tenuifolia Sibth.
Fescue, hard—Festuca trachyphylla (Hack.) Krajina.
Fescue, meadow—Festuca pratensis Huds.
Fescue, red—Festuca rubra L. subsp. rubra.
Fescue, sheep—Festuca ovina L. var. ovina.
Fescue, tall—Festuca arundinacea Schreb.
Flax—Linum usitatissimum L.
Galletagrass—Hilaria jamesii (Torr.) Benth.
Grama, blue—Bouteloua gracilis (Kunth) Griffiths.
Grama, side-oats—Bouteloua curtipendula (Michx.) Torr.
Guar—Cyamopsis tetragonoloba (L.) Taub.
Guineagrass—Panicum maximum Jacq. var. maximum.
Hardinggrass—Phalaris stenoptera Hack.
Hemp—Cannabis sativa L.
Indiangrass, yellow—Sorghastrum nutans (L.) Nash.
Indigo, hairy—Indigofera hirsuta L.
Japanese lawngrass—Zoysia japonica Steud.
Johnsongrass—Sorghum halepense (L.) Pers.
Kenaf—Hibiscus cannabinus L.
Kochia, forage—Kochia prostrata (L.) Schrad.
Kudzu—Pueraria montana (Lour.) Merr. var. lobata (Willd.) Maesen and S. Almeida.
Lentil—Lens culinaris Medik.
Lespedeza, Korean—Kummerowia stipulacea (Maxim.) Makino.
Lespedeza, sericea or Chinese—Lespedeza cuneata (Dum.-Cours.) G. Don.
Lespedeza, Siberian—Lespedeza juncea (L. f.) Pers.
Lespedeza, striate—Kummerowia striata (Thunb.) Schindler.
Lovegrass, sand—Eragrostis trichodes (Nutt.) Wood.
Lovegrass, weeping—Eragrostis curvula (Schrad.) Nees.
Lupine, blue—Lupinus angustifolius L.
Lupine, white—Lupinus albus L.
Lupine, yellow—Lupinus luteus L.
Manilagrass—Zoysia matrella (L.) Merr.
Meadow foxtail—Alopecurus pratensis L.
Medic, black—Medicago lupulina L.
Milkvetch or cicer milkvetch—Astragalus cicer L.
Millet, browntop—Brachiaria ramosa (L.) Stapf.
Millet, foxtail—Setaria italica (L.) Beauv.
Millet, Japanese—Echinochloa frumentacea Link.
Millet, pearl—Pennisetum glaucum (L.) R. Br.
Millet, proso—Panicum miliaceum L.
Molassesgrass—Melinis minutiflora Beauv.
Mustard, black—Brassica nigra (L.) Koch.
Mustard, India—Brassica juncea (L.) Czernj. and Coss.
Mustard, white—Sinapis alba L.
Napiergrass—Pennisetum purpureum Schumach.
Needlegrass, green—Stipa viridula Trinus.
Oat—Avena byzantina C. Koch, A. sativa L., A. nuda L.
Oatgrass, tall—Arrhenatherum elatius (L.) J.S. Presl and K.B. Presl.
Orchardgrass—Dactylis glomerata L.
Panicgrass, blue—Panicum antidotale Retz.
Panicgrass, green—Panicum maximum Jacq. var. trichoglume Robyns.
Pea, field—Pisum sativum L.
Peanut—Arachis hypogaea L.
Poa trivialis—(see Bluegrass, rough).
Rape, annual—Brassica napus L. var. annua Koch.
Rape, bird—Brassica rapa L.
Rape, turnip—Brassica rapa L.
Rape, winter—Brassica napus L. var. biennis (Schubl. and Mart.) Reichb.
Redtop—Agrostis gigantea Roth.
Rescuegrass—Bromus catharticus Vahl.
Rhodesgrass—Chloris gayana Kunth.
Rice—Oryza sativa L.
Ricegrass, Indian—Oryzopsis hymenoides (Roem. and Schult.) Ricker.
Roughpea—Lathyrus hirsutus L.
Rye—Secale cereale L.
Rye, mountain—Secale montanum Guss.
Ryegrass, annual or Italian—Lolium multiflorum Lam.
Ryegrass, intermediate—Lolium x hybridum Hausskn.
Ryegrass, perennial—Lolium perenne L.
Ryegrass, Wimmera—Lolium rigidum Gaud.
Safflower—Carthamus tinctorius L.
Sagewort, Louisiana—Artemisia ludoviciana Nutt.
Sainfoin—Onobrychis viciifolia Scop.
Saltbush, fourwing—Atriplex canescens (Pursh) Nutt.
Sesame—Sesamum indicum L.
Sesbania—Sesbania exaltata (Raf.) A.W. Hill.
Smilo—Oryzopsis miliacea (L.) Asch. and Schweinf.
Sorghum—Sorghum bicolor (L.) Moench.
Sorghum almum—Sorghum x almum L. Parodi.
Sorghum-sudangrass—Sorghum x drummondii (Steudel) Millsp. and Chase.
Sorgrass—Rhizomatous derivatives of a johnsongrass x sorghum cross or a johnsongrass x sudangrass cross.
Southernpea—(See Cowpea).
Sourclover—Melilotus indicus (L.) All.
Soybean—Glycine max (L.) Merr.
Spelt—Triticum spelta L.
Sudangrass—Sorghum x drummondii (Steudel) Millsp. and Chase.
Sunflower—Helianthus annuus L.
Sweetclover, white—Melilotus albus Medik.
Sweetclover, yellow—Melilotus officinalis Lam.
Sweet vernalgrass—Anthoxanthum odoratum L.
Sweetvetch, northern—Hedysarum boreale Nutt.
Switchgrass—Panicum virgatum L.
Timothy—Phleum pratense L.
Timothy, turf—Phleum bertolonii DC.
Tobacco—Nicotiana tabacum L.
Trefoil, big—Lotus uliginosus Schk.
Trefoil, birdsfoot—Lotus corniculatus L.
Triticale—x Triticosecale Wittm. (Secale x Triticum).
Vaseygrass—Paspalum urvillei Steud.
Veldtgrass—Ehrharta calycina J. E. Smith.
Velvetbean—Mucuna pruriens (L.) DC. var. utilis (Wight) Burck.
Velvetgrass—Holcus lanatus L.
Vetch, common—Vicia sativa L. subsp. sativa.

Vetch, hairy—Vicia villosa Roth subsp. villosa.
Vetch, Hungarian—Vicia pannonica Crantz.
Vetch, monantha—Vicia articulata Hornem.
Vetch, narrowleaf or blackpod—Vicia sativa L. subsp. nigra (L.) Ehrh.
Vetch, purple—Vicia benghalensis L.
Vetch, woollypod or winter—Vicia villosa Roth subsp. varia (Host) Corb.
Wheat, common—Triticum aestivum L.
Wheat, club—Triticum compactum Host.
Wheat, durum—Triticum durum Desf.
Wheat, Polish—Triticum polonicum L.
Wheat, poulard—Triticum turgidum L.
Wheat x Agrotricum—Triticum x Agrotriticum.
Wheatgrass, beardless—Elytrigia spicata (Pursh) Dewey.
Wheatgrass, crested or fairway crested—Agropyron cristatum (L.) Gaertn.
Wheatgrass, crested or standard crested—Agropyron desertorum (Link) Schult.
Wheatgrass, intermediate—Elytrigia intermedia (Host) Nevski subsp. intermedia.
Wheatgrass, pubescent—Elytrigia intermedia (Host) Nevski subsp. barbulata (Schur) A. Love.
Wheatgrass, Siberian—Agropyron fragile (Roth) Candargy subsp. sibiricum (Willd.) Meld.
Wheatgrass, slender—Elymus trachycaulus (Link) Shinn.
Wheatgrass, streambank—Elytrigia dasystachya (Hook.) A. Love and D. Love.
Wheatgrass, tall—Elytrigia elongata (Host) Nevski.
Wheatgrass, western—Elymus smithii (Rydb.) Gould.
Wildrye, basin—Leymus cinereus (Scribn. and Merr.) A. Love.
Wildrye, Canada—Elymus canadensis L.
Wildrye, Russian—Psathyrostachys juncea (Fisch.) Nevski.
Zoysia japonica—(see Japanese lawngrass).
Zoysia matrella—(see Manilagrass).

(i) *Vegetable seeds.* The term "vegetable seeds" means the seeds of the following kinds that are or may be grown in gardens or on truck farms and are or may be generally known and sold under the name of vegetable seeds:

Artichoke—Cynara scolymus L.
Asparagus—Asparagus officinalis L.
Asparagusbean or yard-long bean—Vigna unguiculata (L.)
Walp. subsp. sesquipedalis (L.) Verdc.
Bean, garden—Phaseolus vulgaris L.
Bean, lima—Phaseolus lunatus L.
Bean, runner or scarlet runner—Phaseolus coccineus L.
Beet—Beta vulgaris L. subsp. vulgaris.
Broadbean—Vicia faba L.
Broccoli—Brassica oleracea L. var. botrytis L.
Brussels sprouts—Brassica oleracea L. var. gemmifera DC.
Burdock, great—Arctium lappa L.
Cabbage—Brassica oleracea L. var. capitata L.
Cabbage, Chinese—Brassica pekinensis (Lour.) Rupr.
Cabbage, tronchuda—Brassica oleracea L. var. costata DC.
Cantaloupe—(see Melon).
Cardoon—Cynara cardunculus L.
Carrot—Daucus carota L. subsp. sativus (Hoffm.) Arcang.
Cauliflower—Brassica oleracea L. var. botrytis L.
Celeriac—Apium graveolens L. var. rapaceum (Mill.) Gaud.
Celery—Apium graveolens L. var. dulce (Mill.) Pers.
Chard, Swiss—Beta vulgaris L. subsp. cicla (L.) Koch.
Chicory—Cichorium intybus L.
Chives—Allium schoenoprasum L.
Citron—Citrullus lanatus (Thunb.) Matsum. and Nakai var. citroides (Bailey) Mansf.
Collards—Brassica oleracea L. var. acephala DC.
Corn, sweet—Zea mays L.
Cornsalad—Valerianella locusta (L.) Laterrade.
Cowpea—Vigna unguiculata (L.) Walp. subsp. unguiculata.
Cress, garden—Lepidium sativum L.
Cress, upland—Barbarea verna (Mill.) Aschers.
Cress, water—Nasturtium officinale R. Br.
Cucumber—Cucumis sativus L.
Dandelion—Taraxacum officinale Wigg.
Dill—Anethum graveolens L.
Eggplant—Solanum melongena L.
Endive—Cichorium endivia L.
Gherkin, West India—Cucumis anguria L.
Kale—Brassica oleracea L. var. acephala DC.
Kale, Chinese—Brassica oleracea L. var. alboglabra (Bailey)
Musil.
Kale, Siberian—Brassica napus L. var. pabularia (DC.) Reichb.
Kohlrabi—Brassica oleracea L. var. gongylodes L.
Leek—Allium porrum L.
Lettuce—Lactuca sativa L.
Melon—Cucumis melo L.
Muskmelon (see Melon).
Mustard, India—Brassica juncea (L.) Czernj. and Coss.
Mustard, spinach—Brassica perviridis (Bailey) Bailey.
Okra—Abelmoschus esculentus (L.) Moench.
Onion—Allium cepa L.
Onion, Welsh—Allium fistulosum L.
Pak-choi—Brassica chinensis L.
Parsley—Petroselinum crispum (Mill.) A. W. Hill.
Parsnip—Pastinaca sativa L.
Pea—Pisum sativum L.
Pepper—Capsicum spp.
Pe-tsai—(see Chinese cabbage).
Pumpkin—Cucurbita pepo L., C. moschata (Duchesne) Poiret, and C. maxima Duchesne.
Radish—Raphanus sativus L.
Rhubarb—Rheum rhabarbarum L.
Rutabaga—Brassica napus L. var. napobrassica (L.) Reichb.
Sage—Salvia officinalis L.
Salsify—Tragopogon porrifolius L.
Savory, summer—Satureja hortensis L.
Sorrel—Rumex acetosa L.
Southernpea—(see Cowpea).
Soybean—Glycine max (L.) Merr.
Spinach—Spinacia oleracea L.
Spinach, New Zealand—Tetragonia tetragonioides (Pall.) Ktze.
Squash—Cucurbita pepo L., C. moschata (Duchesne) Poiret, and C. maxima Duchesne.
Tomato—Lycopersicon esculentum Mill.
Tomato, husk—Physalis pubescens L.
Turnip—Brassica rapa L.
Watermelon—Citrullus lanatus (Thunb.) Matsum. and Nakai var. lanatus.

* * * * *

(q) *Coated seed.* The term "coated seed" means any seed unit covered with any substance which changes the size, shape, or weight of the original seed. Seeds coated with ingredients such as, but not limited to, rhizobia, dyes, and pesticides are excluded.

* * * * *

(ee) *Certified seed.* Certified seed is a class of certified seed which is the progeny of Breeder, Foundation, or Registered seed, except as provided in § 201.70 and is produced and handled under procedures established by the certifying agency, in accordance with this part, for producing the Certified class of seed, for the purpose of maintaining genetic purity and identity.

* * * * *

§ 201.3 [Amended]

3. Section 201.3 is amended by removing "shall" and adding in its place "may".

§ 201.10 [Amended]

4. Section 201.10(a) is amended by removing the word "hybrid".

§ 201.13 [Amended]

5. Section 201.13 is amended by removing "in" the first time it appears and adding in its place "on".

§ 201.17 [Amended]

6. Section 201.17 is amended by removing "bermuda grass" and adding its place "bermudagrass" everywhere it appears.

§ 201.20 [Amended]

7. Section 201.20 is amended by removing "for each kind or kind and variety or kind and type or kind and hybrid" and adding in its place "each kind, or kind and variety, or kind and type, or kind and hybrid".

8. In § 201.22, paragraph (c) is revised to read as follows:

§ 201.22 Date of test.

* * * * *

(c) The following kinds shall be tested within the indicated time before interstate shipment:

Agricultural seeds and mixtures thereof	Months from test date to shipment
Bentgrass, Colonial: Agrostis capillaris, Bentgrass, Creeping A. stolonifera var. palustris	15

Agricultural seeds and mixtures thereof	Months from test date to shipment
Bluegrass, Kentucky: Poa pratensis	15
Fescue, Chewings: Festuca rubra subsp. commutata	15
Fescue, Hard: Festuca trachyphylla	15
Fescue, Red: Festuca rubra subsp. rubra	15
Fescue, Tall: Festuca arundinacea	15
Ryegrass, Annual: Lolium multiflorum	15
Ryegrass, Perennial: Lolium perenne	15

§ 201.26 [Amended]

9. Section 201.26 is amended by removing "is" following the word "pollination" and adding in its place "in".

10. Section 201.31 is revised to read as follows:

§ 201.31 Germination standards for vegetable seeds in interstate commerce.

The following germination standards for vegetable seeds in interstate commerce, which shall be construed to include hard seed, are determined and established under section 403(c) of the act:

	Percent
Artichoke	60
Asparagus	70
Asparagusbean	75
Bean, garden	70
Bean, lima	70
Bean, runner	75
Beet	65
Broadbean	75
Broccoli	75
Brussels sprouts	70
Burdock, great	60
Cabbage	75
Cabbage, tronchuda	70
Cardoon	60
Carrot	55
Cauliflower	75
Celeriac	55
Celery	55
Chard, Swiss	65
Chicory	65
Chinese cabbage	75
Chives	50
Citron	65
Collards	80
Corn, sweet	75
Cornsalad	70
Cowpea	75
Cress, garden	75
Cress, upland	60
Cress, water	40
Cucumber	80
Dandelion	60
Dill	60
Eggplant	60
Endive	70
Kale	75
Kale, Chinese	75
Kale, Siberian	75
Kohlrabi	75
Leek	60
Lettuce	80
Melon	75
Mustard, India	75
Mustard, spinach	75
Okra	50
Onion	70
Onion, Welsh	70
Pak-choi	75
Parsley	60
Parsnip	60
Pea	80
Pepper	55
Pumpkin	75
Radish	75
Rhubarb	60
Rutabaga	75
Sage	60
Salsify	75
Savory, summer	55
Sorrel	65
Soybean	75
Spinach	60
Spinach, New Zealand	40
Squash	75
Tomato	75
Tomato, husk	50
Turnip	80
Watermelon	70

11. Section 201.34 is amended by revising paragraph (d)(5) and reserving paragraph (e) to read as follows:

§ 201.34 Kind, variety, and type; treatment substances; designation as hybrid.

* * * * *

(d) * * *

(5) Names of varieties which through broad general usage prior to July 28, 1956 were recognized variety names, except for hybrid seed corn, shall be considered variety names without regard to the principles stated in paragraph (d)(2) of this section.

* * * * *

(e) [Reserved]

§ 201.366 [Amended]

12. Section 201.36b, paragraph (b) is amended by removing "pole" and adding in its place "(pole) garden".

13. Section 201.36c, paragraph (c) is revised to read as follows:

§ 201.36c Hermetically-sealed containers.

* * * * *

(c) The seed in the container does not exceed the percentage of moisture, on a wet weight basis, as listed below:

Agricultural seeds	Percent
Beet, field	7.5
Beet, sugar	7.5
Bluegrass, Kentucky	6.0
Kale	5.0
Kohlrabi	5.0
Leek	6.5
Lettuce	5.5
Melon	6.0
Mustard, India	5.0
Onion	6.5
Onion, Welsh	6.5
Parsley	6.5
Parsnip	6.0
Pea	7.0
Pepper	4.5
Pumpkin	6.0
Radish	5.0
Rutabaga	5.0
Spinach	8.0
Squash	6.0
Tomato	5.5
Turnip	5.0
Watermelon	6.5
All others	6.0

§ 201.37 [Amended]

14. Section 201.37 is amended by removing "Consumer and Marketing Service" and adding in its place "Agricultural Marketing Service".

15. In § 201.43, paragraphs (a) through (e) are revised and a new paragraph (g) is added to read as follows:

§ 201.43 Size of sample.

* * * * *

(a) Two ounces (57 grams) of grass seed not otherwise mentioned, white or alsike clover, or seeds not larger than these.

(b) Five ounces (142 grams) of red or crimson clover, alfalfa, lespedeza, ryegrass, bromegrass, millet, flax, rape, or seeds of similar size.

(c) One pound (454 grams) of sudangrass, proso millet, hemp or seeds of similar size.

(d) Two pounds (907 grams) of cereals, sorghum, vetch, or seeds of similar or larger size.

(e) Two quarts (2.2 liters) of screenings.

* * * * *

(g) Coated seed for a purity analysis shall consist of at least 7,500 seed units. Coated seed for noxious-weed seed examination shall consist of at least 30,000 seed units. Coated seed for germination test only shall consist of at least 1,000 seed units.

16. Section 201.44 is revised to read as follows:

§ 201.44 Forwarding samples.

Before being forwarded for analysis, test, or examination, the containers of samples shall be properly sealed and identified in such manner as may be prescribed by the Agricultural Marketing Service. Samples of coated seed shall be forwarded in firmly packed crush-proof and moisture-proof containers.

§ 201.45 [Amended]

17. Section 201.45(b) is amended by removing "," after the words "damaging large seeds" and adding in its place "and coated seeds,".

18. Section 201.46 is amended by adding a new paragraph (d) and revising Table 1 to read as follows:

§ 201.46 Weight of working sample.

* * * * *

(d) *Coated seed*—(1) *Unmixed coated seed.* Due to variation in the weight of coating materials, the size or weight of the working sample shall be determined separately for each lot. The weight of the working sample shall be determined by weighing 100 completely coated units and calculating the weight of 2,500 coated units for the purity analysis and 25,000 coated units for the noxious-weed seed examination.

(2) *Mixtures of coated seed.* The working weight shall be determined in the following manner:

(i) Calculate the weight of the working sample to be used for the mixture under consideration as though the sample were not coated by following paragraph (b) or (c) of this section.

(ii) Determine the amount of coating material on 100 coated units by weighing the coated units. Remove the coating material using the methods described in §§ 201.51b (c) and (d). Calculate the percentage of coating material using the following formulas:

Weight of coating material=weight of 100 coated units—weight of 100 de-coated units;

The percentage of coating material=weight of the coating material divided by the weight of 100 coated units × 100%.

(iii) The weight of the working sample shall be the product of the weight calculated in paragraph (d)(2)(i) of this section multiplied by 100%, divided by 100% minus the percentage of coating material calculated in paragraph (d)(2)(ii) of this section.

TABLE 1.—WEIGHT OF WORKING SAMPLE

Name of seed	Minimum weight for purity analysis (Grams)	Minimum weight for noxious-weed seed examination (Grams)	Approximate number of seeds per gram
Agricultural Seed			
Agrotricum—x Agrotriticum	65	500	39
Alfalfa—Medicago sativa	5	50	500
Alfilaria—Erodium cicutarium	5	50	440
Alyceclover—Alysicarpus vaginalis	5	50	665
Bahiagrass—Paspalum notatum:			
Var. Pensacola	5	50	600
All other vars	7	50	365
Barley—Hordeum vulgare	100	500	30
Barrelclover—Medicago truncatula	10	100	250
Bean:			
Adzuki—Vigna angularis	200	500	11
Field—Phaseolus vulgaris	500	500	4
Mung—Vigna radiata	100	500	24
Beet, field—Beta vulgaris subsp. vulgaris	50	500	55
Beet, sugar—Beta vulgaris subsp. vulgaris	50	500	55
Beggarweed, Florida—Desmodium tortuosum	5	50	440
Bentgrass:			
Colonial (incl. vars. Astoria and Highland)—.			
Agrostis capillaris	0.25	2.5	13,000
Creeping—Agrostis stolonifera var. palustris	0.25	2.5	13,515
Velvet—Agrostis canina	0.25	2.5	18,180
Bermudagrass—Cynodon dactylon var. dactylon	1	10	3,930
Bermudagrass, giant—Cynodon dactylon var. aridus	1	10	2,950
Bluegrass:			
Annual—Poa annua	1	10	2,635
Bulbous—Poa bulbosa	4	40	585
Canada—Poa compressa	0.5	5	5,050
Glaucantha—Poa glaucantha	1	10	
Kentucky (all vars.)—Poa pratensis	1	10	3,060
Nevada—Poa nevadensis	1	10	2,305
Rough—Poa trivialis	0.5	5	4,610
Texas—Poa arachnifera	1	10	2,500
Wood—Poa nemoralis	0.5	5	4,330
Bluejoint—Calamagrostis canadensis	0.5	5	8,461
Bluestem:			
Big—Andropogon gerardii var. gerardii	7	70	320
Little—Schizachyrium scoparium	5	50	525
Sand—Andropogon gerardii var. paucipilus	10	100	215
Yellow—Bothriochloa ischaemum	1	10	1,945
Bottlebrush-squirreltail—Elymus elymoides	9	90	300
Brome:			
Field—Bromus arvensis	5	50	465
Meadow—Bromus biebersteinii	13	130	190
Mountain—Bromus marginatus	20	200	140
Smooth—Bromus inermis	7	70	315
Broomcorn—Sorghum bicolor	40	400	60
Buckwheat—Fagopyrum esculentum	50	500	45

TABLE 1.—WEIGHT OF WORKING SAMPLE—Continued

Name of seed	Minimum weight for purity analysis (Grams)	Minimum weight for noxious-weed seed examination (Grams)	Approximate number of seeds per gram
Buffalograss—Buchloe dactyloides:			
(Burs)	20	200	110
(Caryopses)	3	30	740
Buffelgrass—Cenchrus ciliaris:			
(Fascicles)	6	66	365
(Caryopses)	2	20	1,940
Burclover, California—Medicago polymorpha:			
(in bur)	50	500	
(out of bur)	7	70	375
Burclover, spotted—Medicago arabica:			
(in bur)	50	500	50
(out of bur)	5	50	550
Burnet, little—Sanguisorba minor	25	250	110
Buttonclover—Medicago orbicularis	7	70	365
Canarygrass—Phalaris canariensis	20	200	150
Canarygrass, reed—Phalaris arundinacea	2	20	1,185
Carpetgrass—Axonopus affinis	1	10	2,230
Castorbean—Ricinus communis	500	500	5
Chess, soft—Bromus hordeaceus	5	50	555
Chickpea—Cicer arietinum	500	500	2
Clover:			
Alsike—Trifolium hybridum	2	20	1,500
Arrowleaf—Trifolium vesiculosum	4	40	705
Berseem—Trifolium alexandrinum	5	50	455
Cluster—Trifolium glomeratum	1	10	2,925
Crimson—Trifolium incarnatum	10	100	330
Kenya—Trifolium semipilosum	2	20	
Ladino—Trifolium repens	2	20	1,935
Lappa—Trifolium lappaceum	2	20	1,500
Large hop—Trifolium campestre	1	10	5,435
Persian—Trifolium resupinatum	2	20	1,415
Red—Trifolium pratense	5	50	600
Rose—Trifolium hirtum	7	70	360
Small hop—Trifolium dubium	2	20	1,950
Strawberry—Trifolium fragiferum	5	50	635
Sub—Trifolium subterraneum	25	250	120
White—Trifolium repens	2	20	1,500
Corn:			
Field—Zea mays	500	500	3
Pop—Zea mays	500	500	3
Cotton—Gossypium spp.	300	500	8
Cowpea—Vigna unguiculata subsp. unguiculata	300	500	8
Crambe—Crambe abyssinica	25	250	
Crested dogtail—Cynosurus cristatus	2	20	1,900
Crotalaria:			
Lance—Crotalaria lanceolata	7	70	375
Showy—Crotalaria spectabilis	25	250	80
Slenderleaf—Crotalaria brevidens var. intermedia	10	100	205
Striped—Crotalaria pallida	10	100	215
Sunn—Crotalaria juncea	75	500	35
Crownvetch—Coronilla varia	10	100	305
Dallisgrass—Paspalum dilatatum	4	40	620
Dichondra—Dichondra repens	5	50	470
Dropseed, sand—Sporobolus cryptandrus	0.25	2.5	12,345
Emmer—Triticum dicoccon	100	500	25
Fescue:			
Chewings—Festuca rubra subsp. commutata	3	30	900
Hair—Festuca tenuifolia	1	10	
Hard—Festuca trachyphylla	2	20	1,305
Meadow—Festuca pratensis	5	50	495
Red—Festuca rubra subsp. rubra	3	30	900
Sheep—Festuca ovina var. ovina	2	20	1,165
Tall—Festuca arundinacea	5	50	455
Flax—Linum usitatissimum	15	150	180
Galletagrass—Hilaria jamesii:			
(Other than caryopses)	10	100	260
(Caryopses)	5	50	580

TABLE 1.—WEIGHT OF WORKING SAMPLE—Continued

Name of seed	Minimum weight for purity analysis (Grams)	Minimum weight for noxious-weed seed examination (Grams)	Approximate number of seeds per gram
Grama:			
Blue—Bouteloua gracilis	2	20	1,595
Side-oats—Bouteloua curtipendula:			
(Other than caryopses)	6	60	350
(Caryopses)	2	20	1,605
Guar—Cyamopsis tetragonoloba	75	500	35
Guineagrass—Panicum maximum var. maximum	2	20	2,205
Hardinggrass—Phalaris stenoptera	3	30	750
Hemp—Cannabis sativa	50	500	45
Indiangrass, yellow—Sorghastrum nutans	7	70	395
Indigo, hairy—Indigofera hirsuta	7	70	435
Japanese lawngrass—Zoysia japonica	2	20	1,325
Johnsongrass—Sorghum halepense	10	100	265
Kenaf—Hibiscus cannabinus	50	500	
Kochia, forage—Kochia prostrata	2	20	1,070
Kudzu—Pueraria montana var. lobata	25	250	80
Lentil—Lens culinaris	120	500	14–23
Lespedeza:			
Korean—Kummerowia stipulacea	5	50	525
Sericea—Lespedeza cuneata	3	30	820
Siberian—Lespedeza juncea	3	30	820
Striate—Kummerowia striata	5	50	750
Lovegrass, sand—Eragrostis trichodes	1	10	3,585
Lovegrass, weeping—Eragrostis curvula	1	10	3,270
Lupine:			
Blue—Lupinus angustifolius	500	500	7
White—Lupinus albus	500	500	7
Yellow—Lupinus luteus	300	500	9
Manilagrass—Zoysia matrella	2	20	
Meadow foxtail—Alopecurus pratensis	3	30	893
Medic, black—Medicago lupulina	5	50	585
Milkvetch—Astragalus cicer	9	90	270
Millet:			
Browntop—Brachiaria ramosa	8	80	315
Foxtail—Setaria italica	5	50	480
Japanese—Echinochloa frumentacea	9	90	315
Pearl—Pennisetum glaucum	15	150	180
Proso—Panicum miliaceum	15	150	185
Molassesgrass—Melinis minutiflora	0.5	5	7,750
Mustard:			
Black—Brassica nigra	2	20	1,255
India—Brassica juncea	5	50	625
White—Sinapis alba	15	150	160
Napiergrass—Pennisetum purpureum	5	50	
Needlegrass, green—Stipa viridula	7	70	370
Oat—Avena spp.	75	500	35–50
Oatgrass, tall—Arrhenatherum elatius	6	60	417
Orchardgrass—Dactylis glomerata	3	30	945
Panicgrass, blue—Panicum antidotale	2	20	1,370
Panicgrass, green—Panicum maximum var. trichoglume	2	20	1,305
Pea, field—Pisum sativum	500	500	4
Peanut—Arachis hypogaea	500	500	1–3
Rape:			
Annual—Brassica napus var. annua	7	70	345
Bird—Brassica rapa	7	70	425
Turnip—Brassica rapa	5	50	535
Winter—Brassica napus var. biennis	10	100	230
Redtop—Agrostis gigantea	0.25	2.5	10,695
Rescuegrass—Bromus catharticus	20	200	115
Rhodesgrass—Chloris gayana	1	10	4,725
Rice—Oryza sativa	50	500	65
Ricegrass, Indian—Oryzopsis hymenoides	7	70	355
Roughpea—Lathyrus hirsutus	75	500	40
Rye—Secale cereale	75	500	40
Rye, mountain—Secale montanum	28	280	90
Ryegrass:			
Annual—Lolium multiflorum	5	50	420

TABLE 1.—WEIGHT OF WORKING SAMPLE—Continued

Name of seed	Minimum weight for purity analysis (Grams)	Minimum weight for noxious-weed seed examination (Grams)	Approximate number of seeds per gram
Intermediate—Lolium x hybridum	8	80	338
Perennial—Lolium perenne	5	50	530
Wimmera—Lolium rigidum	5	50	
Safflower—Carthamus tinctorius	100	500	30
Sagewort, Louisiana—Artemisia ludoviciana	0.5	5	8,900
Sainfoin—Onobrychis viciifolia	50	500	50
Saltbush, fourwing—Atriplex canescens	15	150	165
Sesame—Sesamum indicum	7	70	360
Sesbania—Sesbania exaltata	25	250	105
Smilo—Oryzopsis miliacea	2	20	2,010
Sorghum—Sorghum bicolor	50	500	55
Sorghum almum—Sorghum x almum	15	150	150
Sorghum-sudangrass—Sorghum x drummondii	65	500	38
Sorgrass [1]	15	150	135
Sourclover—Melilotus indicus	5	50	660
Soybean—Glycine max	500	500	6–13
Spelt—Triticum spelta	100	500	25
Sudangrass—Sorghum x drummondii	25	250	100
Sunflower (Cult.)—Helianthus annuus	100	500	
Sweetclover:			
White—Melilotus albus	5	50	570
Yellow—Melilotus officinalis	5	50	570
Sweet vernalgrass—Anthoxanthum odoratum	2	20	1,600
Sweetvetch, northern—Hedysarum boreale	19	190	130
Switchgrass—Panicum virgatum	4	40	570
Timothy—Phleum pratense	1	10	2,565
Timothy, turf—Phleum bertolonii	1	10	2,565
Tobacco—Nicotiana tabacum	0.5	5	15,625
Trefoil:			
Big—Lotus uliginosus	2	20	1,945
Birdsfoot—Lotus corniculatus	3	30	815
Triticale—x Triticosecale	100	500	
Vaseygrass—Paspalum urvillei	3	30	970
Veldtgrass—Ehrharta calycina	4	40	655
Velvetbean—Mucuna pruriens var. utilis	500	500	2
Velvetgrass—Holcus lanatus	1	10	3,360
Vetch:			
Common—Vicia sativa subsp. sativa	150	500	19
Hairy—Vicia villosa subsp. villosa	75	500	35
Hungarian—Vicia pannonica	100	500	24
Monantha—Vicia articulata	100	500	
Narrowleaf—Vicia sativa subsp. nigra	50	500	60
Purple—Vicia benghalensis	100	500	22
Woollypod—Vicia villosa subsp. varia	100	500	25
Wheat:			
Common—Triticum aestivum	100	500	25
Club—Triticum compactum	100	500	25
Durum—Triticum durum	100	500	25
Polish—Triticum polonicum	100	500	25
Poulard—Triticum turgidum	100	500	25
Wheat x Agrotricum—Triticum x Agrotriticum	65	500	38
Wheatgrass:			
Beardless—Elytrigia spicata	8	80	275
Fairway crested—Agropyron cristatum	4	40	685
Standard crested—Agropyron desertorum	5	50	425
Intermediate—Elytrigia intermedia subsp. intermedia	15	150	175
Pubescent—Elytrigia intermedia subsp. barbulata	15	150	180
Siberian—Agropyron fragile subsp. sibiricum	5	50	
Slender—Elymus trachycaulus	7	70	295
Streambank—Elytrigia dasystachya	10	50	370
Tall—Elytrigia elongata	15	150	165
Western—Elymus smithii	10	100	250
Wildrye:			
Basin—Leymus cinereus	8	80	317
Canada—Elymus canadensis	11	110	190
Russian—Psathyrostachys juncea	6	60	360

TABLE 1.—WEIGHT OF WORKING SAMPLE—Continued

Name of seed	Minimum weight for purity analysis (Grams)	Minimum weight for noxious-weed seed examination (Grams)	Approximate number of seeds per gram
Vegetable Seed			
Artichoke—Cynara scolymus	100	500	24
Asparagus—Asparagus officinalis	100	500	25
Asparaqusbean—Vigna unguiculata subsp. sesquipedalis	300	500	8
Bean:			
Garden—Phaseolus vulgaris	500	500	4
Lima—Phaseolus lunatus	500	500	2
Runner—Phaseolus coccineus	500	500	1
Beet—Beta vulgaris subsp. vulgaris	50	300	60
Broadbean—Vicia faba	500	500	
Broccoli—Brassica oleracea var. botrytis	10	50	315
Brussels sprouts—Brassica oleracea var. gemmifera	10	50	315
Burdock, great—Arctium lappa	15	150	
Cabbage—Brassica oleracea var. capitata	10	50	315
Cabbage, Chinese—Brassica pekinensis	5	50	635
Cabbage, tronchuda—Brassica oleracea var. costata	10	100	
Cardoon—Cynara cardunculus	100	500	
Carrot—Daucus carota subsp. sativus	3	50	825
Cauliflower—Brassica oleracea var. botrytis	10	50	315
Celeriac—Apium graveolens var. rapaceum	1	25	2,520
Celery—Apium graveolens var. dulce	1	25	2,520
Chard, Swiss—Beta vulgaris subsp. cicla	50	300	60
Chicory—Cichorium intybus	3	50	940
Chives—Allium schoenoprasum	5	50	
Citron—Citrullus lanatus var. citroides	200	500	11
Collards—Brassica oleracea var. acephala	10	50	315
Corn, sweet—Zea mays	500	500	
Cornsalad—Valerianella locusta:			
Vars. Fullhearted and Dark Green Fullhearted	5	50	
All other vars.	10	50	380
Cowpea—Vigna unguiculata subsp. unguiculata	300	500	8
Cress:			
Garden—Lepidium sativum	5	50	425
Upland—Barbarea verna	2	35	1,160
Water—Nasturtium officinale	1	25	5,170
Cucumber—Cucumis sativus	75	500	40
Dandelion—Taraxacum officinale	2	35	1,240
Dill—Anethum graveolens	3	50	800
Eggplant—Solanum melongena	10	50	230
Endive—Cichorium endivia	3	50	940
Gherkin, West India—Cucumis anguria	16	160	153
Kale—Brassica oleracea var. acephala	10	50	315
Kale, Chinese—Brassica oleracea var. alboglabra	10	50	
Kale, Siberian—Brassica napus var. pabularia	8	80	325
Kohlrabi—Brassica oleracea var. gongylodes	10	50	315
Leek—Allium porrum	7	50	395
Lettuce—Lactuca sativa	3	50	890
Melon—Cucumis melo	50	500	45
Mustard, India—Brassica juncea	5	50	625
Mustard, spinach—Brassica perviridis	5	50	535
Okra—Abelmoschus esculentus	100	500	19
Onion—Allium cepa	7	50	340
Onion, Welsh—Allium fistulosum	10	50	
Pak-choi—Brassica chinensis	5	50	635
Parsley—Petroselinum crispum	5	50	650
Parsnip—Pastinaca sativa	5	50	430
Pea—Pisum sativum	500	500	3
Pepper—Capsicum spp.	15	150	165
Pumpkin—Cucurbita maxima, C. moschata, and C. pepo	500	500	5
Radish—Raphanus sativus	30	300	75
Rhubarb—Rheum rhabarbarum	50	300	60
Rutabaga—Brassica napus var. napobrassica	5	50	430
Sage—Salvia officinalis	25	150	120
Salsify—Tragopogon porrifolius	50	300	65
Savory, summer—Satureja hortensis	2	35	1,750
Sorrel—Rumex acetosa	2	35	1,080
Soybean—Glycine max	500	500	6–13

TABLE 1.—WEIGHT OF WORKING SAMPLE—Continued

Name of seed	Minimum weight for purity analysis (Grams)	Minimum weight for noxious-weed seed examination (Grams)	Approximate number of seeds per gram
Spinach—Spinacia oleracea	25	150	100
Spinach, New Zealand—Tetragonia tetragonioides	200	500	13
Squash—Cucurbita maxima, C. moschata, and C. pepo	200	500	14
Tomato—Lycopersicon esculentum	5	50	405
Tomato, husk—Physalis pubescens	2	35	1,240
Turnip—Brassica rapa	5	50	535
Watermelon—Citrullus lanatus var. lanatus	200	500	11

[1] Rhizomatous derivatives of a johnsongrass x sorghum cross or a johnsongrass x sudangrass cross.

19. Section 201.47 is amended by revising paragraph (e) and adding a new paragraph (f) to read as follows:

§ 201.47 Separation.

* * * * *

(e) The Uniform Blowing Procedure described in § 201.51a(a) shall be used for the separation of pure seed and inert matter in seeds of Kentucky bluegrass (Poa pratensis), Canada bluegrass (P. compressa), rough bluegrass (P. trivialis), Pensacola variety of bahiagrass (Paspalum notatum), orchardgrass (Dactylis glomerata), side-oats grama (Bouteloua curtipendula), and blue grama (Bouteloua gracilis).

(f) Procedures for purity analysis for coated seed are given in § 201.51b.

20. Section 201.47a is amended by revising paragraphs (b)(3), (b)(4), and (g) to read as follows:

§ 201.47a Seed unit.

* * * * *

(b) * * *

(3) Entire spikelets in bentgrasses and redtop (Agrostis spp.); browntop millet (Brachiaria ramosa); rice (Oryza sativa); panicgrasses, guineagrass, proso millet, and switchgrass (Panicum spp.); dallisgrass, bahiagrass, and vaseygrass (Paspalum spp.); and foxtail millet (Setaria italica). Entire spikelets which may have attached rachis segments, pedicels, and sterile spikelets in bluestems (Andropogon spp.); yellow bluestem (Bothriochloa ischaemum); bottlebrush-squirreltail (Elymus elymoides); little bluestem (Schizachyrium scoparium); yellow indiangrass (Sorghastrum nutans); and broomcorn, johnsongrass, sorghum, sorghum-sudangrass, sorghum almum, sorgrass, and sudangrass (Sorghum spp.);

(4) Spikelet groups:

(i) Spikelet groups that disarticulate as a unit in galletagrass (Hilaria jamesii);

(ii) Spikelet groups that disarticulate as units with attached rachis and internodes in bluestems (Andropogon spp., Bothriochloa ischaemum, and Schizachyrium scoparium), side-oats grama (Bouteloua curtipendula), and yellow indiangrass (Sorghastrum nutans);

* * * * *

(g) "Seed balls" or portions thereof in multigerm beets (Beta vulgaris), and fruits with accessory structures such as occur in other Chenopodiaceae and New Zealand spinach (Tetragonia tetragonioides). For forage kochia (Kochia prostrata) refer to § 201.48(j) and § 201.51(a)(7).

21. In § 201.48, paragraphs (g)(2), (g)(3), (h), and (i) are revised and a new paragraph (j) is added to read as follows:

§ 201.48 Kind or variety considered pure seed.

* * * * *

(g) * * *

(2) The Uniform Blowing Procedure described in § 201.51a(a) shall be used to determine classification of florets into pure seed or inert matter for Kentucky bluegrass (Poa pratensis), Canada bluegrass (P. compressa), rough bluegrass (P. trivialis), Pensacola variety of bahiagrass (Paspalum notatum), orchardgrass (Dactylis glomerata), side-oats grama (Bouteloua curtipendula); and blue grama (Bouteloua gracilis).

(3) Special purity procedures for Chewings fescue (Festuca rubra subsp. commutata), red fescue (F. rubra subsp. rubra), orchardgrass (Dactylis glomerata), crested wheatgrass (Agropyron cristatum or A. desertorum), pubescent wheatgrass (Elytrigia intermedia subsp. barbulata), intermediate wheatgrass (Elytrigia intermedia subsp. intermedia), smooth brome (Bromus inermis), western wheatgrass (Elymus smithii), and tall wheatgrass (Elytrigia elongata) are listed in § 201.51a(b).

* * * * *

(h) Seed units with nematode galls, fungal bodies (i.e. ergot, other sclerotia, and smut) and spongy or corky caryopses that are entirely enclosed within the seed unit. Refer to § 201.51(c)(1) for inert matter classification.

(i) Seed units of beet (Beta vulgaris) and other Chenopodiaceae, and New Zealand spinach (Tetragonia tetragonioides). Refer to § 201.47a(g) and § 201.51(a)(6) for definitions of seed units and inert matter, respectively.

(j) Seed units of forage kochia (Kochia prostrata) that are retained in a 1 mm opening square-hole sieve, when shaken for 30 seconds. For inert matter, refer to § 201.51(a)(7).

22. Section 201.49 is revised to read as follows:

§ 201.49 Other crop seed.

(a) Seeds of plants grown as crops (other than the kind(s) and variety(ies) included in the pure seed) shall be considered other crop seeds, unless recognized as weed seeds by applicable laws, or regulations, or by general usage. All interpretations and definitions for "pure seed" in § 201.48 shall also apply in determining whether seeds are "other crop seed" or "inert matter" with the following two exceptions which may be applied as acceptable alternatives:

(1) Uniform Blowing Procedure in § 201.51a(a) for kinds listed in § 201.47(e) may be disregarded. If disregarded, all seed units (as defined in § 201.47a) for these kinds found in the working sample shall be manually separated into pure seed and inert matter. Only units containing at least one caryopsis with some degree of endosperm development which can be detected either by slight pressure or by examination over light are considered other crop seed.

(2) Multiple Unit Procedure in § 201.51a(b) for kinds listed in § 201.48(g)(3) may be disregarded. If disregarded, all multiple units and single units (as defined in § 201.51a(b)) for these kinds found in the working

sample shall be manually separated into single florets. Each floret containing a caryopsis with some degree of endosperm development, which can be detected either by slight pressure or examination over light, is considered other crop seed. Empty florets and glumes, if present, are considered inert matter. Refer to § 201.51(a)(4).

(b) [Reserved]

23. Section 201.50 paragraph (c) is revised to read as follows:

§ 201.50 Weed seed.

* * * * *

(c) Wild onion and wild garlic (Allium spp.) bulblets that have any part of the husk remaining and are not damaged at the basal end are considered weed seeds regardless of size. Bulblets that are completely devoid of husk, and are not damaged at the basal end, and are retained by a 1/13th-inch (1.9 mm) round-hole sieve are considered weed seeds. For wild onion and wild garlic (Allium spp.) bulblets classed as inert matter, refer to § 201.51(b)(5).

24. Section 201.51 paragraphs (a)(5), (a)(6), and (c)(2) are revised and new paragraphs (a)(7), (a)(8), and (c)(3) are added to read as follows:

§ 201.51 Inert matter.

(a) * * *

(5) Seed units with nematode galls or fungal bodies (smut, ergot, and other sclerotia) that are not entirely enclosed within the seed unit. Refer to § 201.48(h) for pure seed classification.

(6) Broken seed units of Chenopodiaceae and fruit portions or fragments of monogerm beets (Beta vulgaris), New Zealand spinach (Tetragonia tetragonioides), buffalograss (Buchloe dactyloides), and families in which the seed unit is a dry indehiscent one-seeded fruit that visibly do not contain a seed. Refer to § 201.48(f), (g)(1), (i), and (j) for pure seed classification.

(7) Seed units of forage kochia (Kochia prostrata) that pass through a 1 mm opening, square-hole sieve, when shaken for 30 seconds.

(8) The thin pericarp (fruit wall), if present on seeds of northern sweetvetch (Hedysarum boreale).

* * * * *

(c) * * *

(2) Soil particles, sand, stone, chaff, stems, leaves, flowers, loose coating material, and any other foreign material.

(3) Coating material removed from coated seed by washing. Refer to § 201.51b(c).

25. Section 201.51a is revised to read as follows:

§ 201.51a Special procedures for purity analysis.

(a) The Uniform Blowing Procedure shall be used for the separation of pure seed and inert matter in the following: Kentucky bluegrass (Poa pratensis); Canada bluegrass (P. compressa); rough bluegrass (P. trivialis); Pensacola variety of bahiagrass (Paspalum notatum); orchardgrass (Dactylis glomerata); blue grama (Bouteloua gracilis); and side-oats grama (Bouteloua curtipendula). When kinds listed in this section appear in mixtures they shall be separated from other kinds before using the Uniform Blowing Procedure. To determine the blowing point for these procedures, individual calibration samples for Kentucky bluegrass, orchardgrass, and Pensacola variety of bahiagrass shall be used. The calibration sample for Kentucky bluegrass shall be used for Canada bluegrass and rough bluegrass. The blowing point for Canada bluegrass shall be the same as the blowing point determined for Kentucky bluegrass. The blowing point for rough bluegrass shall be a factor of 0.82 (82 percent) of the blowing point determined for Kentucky bluegrass. The 0.82 factor is restricted to the General-type seed blower. The blowing point for blue grama shall be a factor of 1.157 of the blowing point determined for Kentucky bluegrass. Before blowing, extraneous material that will interfere with the blowing process shall be removed. The sample to be blown shall be divided into four approximately equal parts and each blown separately. The 1.157 factor is restricted to the General-type seed blower. The blowing point for side-oats grama shall be a factor of 1.480 of the blowing point determined for Kentucky bluegrass. Before blowing, extraneous material that will interfere with the blowing process shall be removed. The sample to be blown shall be divided into four approximately equal parts and each part blown separately. The 1.480 factor is restricted to the General-type seed blower. Calibration samples and instructions are available through the Seed Regulatory and Testing Branch, LS, AMS, Building 306, room 213, Beltsville, Maryland 20705. The calibration samples shall be used to establish a blowing point prior to proceeding with the separation of pure seed and inert matter for these kinds. After completing the blowing procedure, remove all weed and other crop seeds from the light portion and add these to the weed or other crop separation, as appropriate. The remainder of the light portion shall be considered inert matter. Remove all weed and other crop seeds and other inert matter (stems, leaves, dirt) from the heavy portion and add these to the weed seed, other crop seed, or inert matter separations, as appropriate. The remainder of the heavy portion shall be considered pure seed. With orchardgrass, after the blowing, proceed with the multiple unit procedure.

(b) The Multiple Unit Procedure of determining the pure seed fraction shall be used only for the kinds included in the following table when multiple units are present in a sample. These methods are applicable to the kinds listed when they occur in mixtures or singly. Any single unit without attached structures, as described below, shall be considered a single unit. Multiple units and single units for the kinds listed shall remain intact. The attached glumes and fertile or sterile florets shall not be removed from the fertile floret.

(1) A multiple unit is a seed unit that includes one or more structures as follows (the length of the awn shall be disregarded when determining the length of a fertile floret or an attached structure):

(i) An attached sterile or fertile floret that extends to or beyond the tip of a fertile floret;

(ii) A fertile floret with basally attached glume, glumes, or basally attached sterile floret of any length;

(iii) A fertile floret with two or more attached sterile and/or fertile florets of any length.

(2) Procedure for determination of multiple units:

(i) For the single kind: determine the percentage of single units present, based on the total weight of single units and multiple units. Apply the appropriate factor, as determined from the following table, to the weight of the multiple units and add that portion of the multiple unit weight to the weight of the single units. The remaining multiple unit weight shall be added to the weight of the inert matter.

(ii) For mixtures that include one or more of the kinds in the following table, determine the percentage of single units, based on the total weight of single units and multiple units, for each kind. Apply the appropriate factor as determined from the following table, to the weight of multiple units of each kind.

TABLE OF FACTORS TO APPLY TO MULTIPLE UNITS [a]

Percent of single units of each kind	Chewings fescue	Red fescue	Orchardgrass	Crested wheatgrass [b]	Pubescent wheatgrass	Intermediate wheatgrass	Tall wheatgrass [c]	Western wheatgrass [c]	Smooth brome
50 or below	91	80	80	70	66	72	.....	.....	72
50.01–55.00	91	81	81	72	67	74	.....	.....	74
55.01–60.00	91	82	81	73	67	75	.....	.....	75
60.01–65.00	91	83	82	74	67	76	.....	.....	76
65.01–70.00	91	84	82	75	68	77	.....	60	78
70.01–75.00	91	86	82	76	68	78	.....	66	79
75.01–80.00	91	87	83	77	69	79	50	67	81
80.01–85.00	91	88	83	78	69	80	55	68	82
85.01–90.00	91	89	83	79	69	81	65	70	83
90.01–100.00	91	90	84	79	70	82	70	74	85

[a] The factors represent the percentages of the multiple unit weights which are considered pure seed. The remaining percentage is regarded as inert matter

[b] Includes both Agropyron cristatum and A. desertorum.

[c] Dashes in table indicate that no factors are available at the levels shown.

26. New § 201.51b is added to read as follows:

§ 201.51b Purity procedures for coated seed.

(a) The working sample for coated seed is obtained as described in § 201.46(d) (1) and (2), and weighed in grams to four significant figures.

(b) Any loose coating material shall be sieved, weighed, and included with the inert matter component.

(c) Coating material is removed from the seed by washing with water or other solvents such as, but not limited to, diluted sodium hydroxide (NaOH). Use of fine mesh sieves is recommended for this procedure, and stirring or shaking the coated units may be necessary to obtain de-coated seed.

(d) Spread de-coated seed on blotters or filter paper in a shallow container. Air dry overnight at room temperature.

(e) Separation of component parts:

(1) Kind or variety considered pure seed.

(2) Other crop seed.

(3) Inert matter.

(4) Weed seed.

(f) The de-coated seed shall be separated into four components in accordance with §§ 201.48 through 201.51. Sections 201.51a (a) and (b) shall not be followed. The weight of the coating material is determined by subtracting the sum of the weights of the other four components from the original weight of the working sample. The percentage of coating material shall be included with the inert matter percentage. Calculate percentages of all components based on the original weight of the working sample (see paragraph (a) of this section).

27. Section 201.52 is revised to read as follows:

§ 201.52 Noxious-weed seeds.

(a) The determination of the number of seeds, bulblets, or tubers of individual noxious weeds present per unit weight should be made on at least the minimum quantities listed in § 201.46 Table 1: *Provided,* That if the following indicated numbers of a single kind of seed, bulblet, or tuber are found in the pure seed analysis (or noxious-weed seed examination of a like amount) the occurrence of that kind in the remainder of the bulk examined for noxious-weed seeds need not be noted: ½-gram purity working sample, 16 or more seeds; 1-gram purity working sample, 23 or more seeds; 2-gram purity working sample or larger, 30 or more seeds. The seeds per unit weight shall be based on the number of single seeds. The number of individual seeds shall be determined in burs of sandbur (Cenchrus spp.) and cocklebur (Xanthium spp.); in capsules of dodder (Cuscuta spp.); in berries of groundcherry, horsenettle, and nightshade (Solanaceae); and in the fruits of other noxious weeds that contain more than one seed. Refer to §§ 201.50 and 201.51(b)(4) for the classification of weed seeds and inert matter, respectively.

(b) A noxious-weed seed examination of coated seed samples shall be made by examining approximately 25,000 units obtained in accordance with § 201.46(d) and which have been de-coated by the method described in § 201.51b(c).

28. Section 201.54 is revised to read as follows:

§ 201.54 Number of seeds for germination.

At least 400 seeds shall be tested for germination except that in mixtures 200 seeds of each of those kinds present to the extent of 15 percent or less may be used in lieu of 400, in which case an additional 2 percent is to be added to the regular germination tolerances. The seeds shall be tested in replicate tests of 100 seeds or less.

29. In § 201.56, paragraphs (a), (b), (c), and (e) are revised to read as follows:

§ 201.56 Interpretation.

(a) A seed shall be considered to have germinated when it has developed those essential structures which, for the kind of seed under consideration, are indicative of its ability to produce a normal plant under favorable conditions. In general, the following are considered to be essential structures necessary for the continued development of the seedling (although some structures may not be visible in all kinds at the time of seedling evaluation). Seedlings possessing these essential structures are referred to as normal seedlings:

(1) Root system, consisting of primary, secondary, seminal, or adventitious roots.

(2) Hypocotyl.

(3) Epicotyl.

(4) Cotyledon(s).

(5) Terminal bud.

(6) Primary leaves.

(7) Coleoptile and mesocotyl (in the grass family).

(b) Abnormal seedlings consist of those with defects to these structures, as described in the abnormal seedling descriptions, and are judged to be incapable of continued growth.

(c) The seedling descriptions assume that test conditions were adequate to allow proper assessment of the essential seedling structures.

* * * * *

(e) Standard guides for seedling interpretation shall include the following descriptions for specific kinds and groups. The "General Description" for each group of crop kinds describes a seedling without defects. While such

a seedling is clearly normal, seedlings with some defects may also be classified as normal, provided the defects do not impair the functioning of the structure. The "Abnormal seedling description" is to be followed when judging the severity of defects.

30. Sections 201.56–1 through 201.56–12 are revised to read as follows:

§ 201.56–1 Goosefoot family, Chenopodiaceae, and Carpetweed family, Aizoaceae.

Kinds of seed: Beet, Swiss chard, fourwing saltbush, spinach, New Zealand spinach, and forage kochia.

(a) General description.

(1) Germination habit: Epigeal dicot.

(2) Food reserves: Leaf-like cotyledons and perisperm.

(3) Shoot system: The hypocotyl elongates carrying the cotyledons above the soil surface. The epicotyl usually does not show any development within the test period.

(4) Root system: A primary root; secondary roots may develop within the test period.

(5) Seedling: Frequent counts should be made on multigerm beet since the growing seedlings will separate from the cluster making it difficult to identify the source. Any cluster which produces at least one normal seedling is classified as normal; only one normal seedling per cluster is to be counted (see § 201.56(d)). Toxic substances from the clusters of beet and Swiss chard may cause discoloring of the hypocotyl and/or root. Seedlings which are slightly discolored are to be classified as normal; however, if there is excessive discoloration, retest by the method in § 201.58(b)(3).

(b) Abnormal seedling description.

(1) Cotyledons:

(i) Less than half of the original cotyledon tissue remaining attached.

(ii) Less than half of the original cotyledon tissue free of necrosis or decay.

(2) Epicotyl:

(i) Missing. (May be assumed to be present if cotyledons are intact.)

(3) Hypocotyl:

(i) Deep open cracks extending into the conducting tissue.

(ii) Malformed, such as markedly shortened, curled, or thickened.

(iii) Watery.

(4) Root:

(i) None.

(ii) Weak, stubby, or missing primary root with weak secondary or adventitious roots.

(iii) For discolored roots of beet and Swiss chard, see § 201.58(b)(3).

(5) Seedling:

(i) One or more essential structures impaired as a result of decay from primary infection. (For discolored seedlings of beet and Swiss chard, see § 201.58(b)(3).)

(ii) Albino.

§ 201.56–2 Sunflower family, Asteraceae (Compositae).

Kinds of seed: Artichoke, cardoon, chicory, dandelion, endive, great burdock, lettuce, safflower, salsify, Louisiana sagewort, and sunflower.

(a) Lettuce.

(1) General description.

(i) Germination habit: Epigeal dicot.

(ii) Food reserves: Cotyledons which expand and become thin, leaf-like, and photosynthetic. The cotyledons of some varieties develop elongated petioles.

(iii) Shoot system: The hypocotyl elongates and carries the cotyledons above the soil surface. The epicotyl usually does not show any development within the test period.

(iv) Root system: A long primary root.

(v) Seedling: The interpretations of lettuce seedlings are made only at the end of the test period.

(2) Abnormal seedling description.

(i) Cotyledons:

(A) Less than half of the original cotyledon tissue remaining attached.

(B) Less than half of the original cotyledon tissue free of necrosis or decay. (Remove attached seed coat for evaluation of cotyledons. Physiological necrosis is manifested by discolored areas on the cotyledons and should not be confused with natural pigmentation of some lettuce varieties.)

(ii) Epicotyl:

(A) Missing. (May be assumed to be present if cotyledons are intact.)

(B) Any degree of necrosis or decay.

(iii) Hypocotyl:

(A) Deep open cracks extending into the conducting tissue.

(B) Severely twisted or grainy.

(C) Watery.

(iv) Root:

(A) Weak, stubby, or missing primary root. (Secondary roots will not compensate for a defective root.)

(B) Primary root tip blunt, swollen, or discolored. (Toxic materials in the substratum may cause short, blunt roots; see § 201.58(a)(9).)

(C) Primary root with splits or lesions.

(v) Seedling:

(A) Swollen cotyledons associated with extremely short or vestigial hypocotyl and root.

(B) One or more essential structures impaired as a result of decay from primary infection.

(C) Albino.

(b) Other kinds in the sunflower family: Artichoke, cardoon, chicory, dandelion, endive, great burdock, safflower, salsify, Louisiana sagewort, and sunflower.

(1) General description.

(i) Germination habit: Epigeal dicot.

(ii) Food reserves: Cotyledons which expand and become thin, leaf-like, and photosynthetic.

(iii) Shoot system: The hypocotyl elongates and carries the cotyledons above the soil surface. The epicotyl usually does not show any development within the test period.

(iv) Root system: A long primary root with secondary roots usually developing within the test period.

(2) Abnormal seedling description.

(i) Cotyledons:

(A) Less than half of the original cotyledon tissue remaining attached.

(B) Less than half of the original cotyledon tissue free of necrosis or decay. (Remove any attached seed coats at the end of the test period for evaluation of cotyledons.)

(ii) Epicotyl:

(A) Missing. (May be assumed to be present if cotyledons are intact.)

(iii) Hypocotyl:

(A) Deep open cracks extending into the conducting tissue.

(B) Malformed, such as markedly shortened, curled, or thickened.

(C) Watery.

(iv) Root:

(A) None.

(B) Weak, stubby, or missing primary root with weak secondary or adventitious roots. (Seedlings with roots bound within tough seed coats should be left in the test until the final count to allow for development.)

(v) Seedling:

(A) One or more essential structures impaired as a result of decay from primary infection.

(B) Albino.

§ 201.56–3 Mustard family, Brassicaceae (Cruciferae).

Kinds of seed: Broccoli, brussels sprouts, cabbage, Chinese cabbage, cauliflower, collards, garden cress, upland cress, water cress, kale, Chinese kale, Siberian kale, kohlrabi, mustard, pak-choi, radish, rape, rutabaga, and turnip.

(a) General description.

(1) Germination habit: Epigeal dicot.

(2) Food reserves: Cotyledons which expand and become thin, leaf-like and photosynthetic. In Brassica, Sinapis, and Raphanus, the cotyledons are bi-lobed and folded, with the outer cotyledon being larger than the inner.

(3) Shoot system: The hypocotyl elongates and carries the cotyledons above the soil surface; the epicotyl usually does not show any development within the test period.

(4) Root system: A long primary root.

(b) Abnormal seedling description.

(1) Cotyledons:
(i) Decayed at point of attachment.
(ii) Less than half of the original cotyledon tissue remaining attached.
(iii) Less than half of the original cotyledon tissue free of necrosis or decay.
(2) Epicotyl:
(i) Missing. (May be assumed to be present if the cotyledons are intact.)
(3) Hypocotyl:
(i) Deep open cracks extending into the conducting tissue.
(ii) Malformed, such as markedly shortened, curled, or thickened.
(iii) Watery.
(4) Root:
(i) Weak, stubby, or missing primary root. (Secondary roots will not compensate for a defective root.)
(5) Seedling:
(i) One or more essential structures impaired as result of decay from primary infection.
(ii) Albino.

§ 201.56–4 Cucurbit family, Cucurbitaceae.

Kinds of seed: Citron, cucumber, West India gherkin, melon, pumpkin, squash, and watermelon.
(a) General description.
(1) Germination habit: Epigeal dicot.
(2) Food reserves: Cotyledons which are large and fleshy; they expand, become photosynthetic, and usually persist beyond the seedling stage.
(3) Shoot system: The hypocotyl elongates and the cotyledons are pulled free of the seed coat, which often adheres to a peg-like appendage at the base of the hypocotyl. The epicotyl usually does not show any development within the test period.
(4) Root system: A long primary root with numerous secondary roots.
(b) Abnormal seedling description.
(1) Cotyledons:
(i) Less than half of the original cotyledon tissue remaining attached.
(ii) Less than half of the original cotyledon tissue free of necrosis or decay. (Remove any attached seed coats at the end of the test period for evaluation of cotyledons.)
(2) Epicotyl:
(i) Missing. (May be assumed to be present if the cotyledons are intact.)
(3) Hypocotyl:
(i) Deep open cracks extending into the conducting tissue.
(ii) Malformed, such as markedly shortened, curled, or thickened.
(4) Root:
(i) None.
(ii) Weak, stubby, or missing primary root, with less than two strong secondary or adventitious roots.
(5) Seedling:
(i) One or more essential structures impaired as a result of decay from primary infection.
(ii) Albino.

§ 201.56–5 Grass family, Poaceae (Gramineae).

Kinds of seed: Bentgrasses, bluegrasses, bluestems, bromes, cereals, fescues, millets, orchardgrass, redtop, ryegrasses, sorghums, timothy, turf timothy, wheatgrasses, and all other grasses listed in § 201.2(h).
(a) Cereals: Agrotricum, barley, oat, rye, mountain rye, wheat, wheat x agrotricum, and triticale.
(1) General description.
(i) Germination habit: Hypogeal monocot.
(ii) Food reserves: Endosperm. The scutellum is a modified cotyledon which is in direct contact with the endosperm. During germination the scutellum remains inside the seed to absorb nutrients from the endosperm and transfer them to the growing seedling.
(iii) Shoot system: The shoot consists of the coleoptile, leaves enclosed in the coleoptile, and the mesocotyl. The coleoptile elongates and pushes through the soil surface; the mesocotyl may elongate depending on the variety and light intensity, but may not be discernible. Splitting of the coleoptile occurs naturally as a result of growth and emergence of the leaves.
(iv) Root system: A primary root and seminal roots. The primary root is not readily distinguishable from the seminal roots; therefore, all roots arising from the seed are referred to as seminal roots.
(2) Abnormal seedling description.
(i) Shoot:
(A) Missing.
(B) No leaf.
(C) Leaf extending less than halfway up into the coleoptile.
(D) Leaf extensively shredded or split.
(E) Spindly or watery.
(F) Grainy, spirally twisted, shredded, and weak.
(G) Deep open cracks in the mesocotyl.
(ii) Root:
(A) Less than one strong seminal root.
(iii) Seedling:
(A) Decayed at point of attachment to the scutellum.
(B) One or more essential structures impaired as a result of decay from primary infection.
(C) Albino.
(D) Endosperm obviously detached from the root-shoot axis (e.g. kernel lifted away by the growing shoot).
(E) Thickened and shortened roots and/or shoots.
(b) Rice.
(1) General description.
(i) Germination habit: Hypogeal monocot.
(ii) Food reserves: Endosperm. The scutellum is a modified cotyledon which is in direct contact with the endosperm. During germination the scutellum remains inside the seed to absorb nutrients from the endosperm and transfer them to the growing seedling.
(iii) Shoot system: The shoot consists of the coleoptile, leaves enclosed in the coleoptile, and the mesocotyl. The coleoptile elongates and pushes through the soil or water surface; the mesocotyl may elongate depending on the variety and environmental conditions. Splitting of the coleoptile occurs naturally as a result of growth and emergence of the leaves.
(iv) Root system: Strong primary root and seminal roots. Adventitious roots may start to develop from the mesocotyl or coleoptilar node within the test period. If the mesocotyl elongates, the adventitious roots will be carried above the grain.
(2) Abnormal seedling description.
(i) Shoot:
(A) Missing.
(B) No leaf.
(C) Leaf extending less than halfway up into the coleoptile.
(D) Leaf extensively shredded or split.
(E) Spindly or watery.
(F) Deep open cracks in the mesocotyl.
(ii) Root:
(A) None.
(B) Weak primary root with insufficient seminal or adventitious roots.
(iii) Seedling:
(A) Decayed at point of attachment to the scutellum.
(B) One or more essential structures impaired as a result of decay from primary infection.
(C) Albino.
(c) Corn.
(1) General description.
(i) Germination habit: Hypogeal monocot.
(ii) Food reserves: Endosperm. The scutellum is a modified cotyledon which is in direct contact with the endosperm. During germination the scutellum remains inside the seed to absorb nutrients from the endosperm and transfer them to the growing seedling.
(iii) Shoot system: The shoot consists of the coleoptile, leaves enclosed in the coleoptile, and the mesocotyl. The coleoptile elongates and pushes through

the soil surface. The mesocotyl usually elongates. Splitting of the coleoptile occurs naturally as a result of growth and emergence of the leaves. A twisted and curled shoot bound by a tough seed coat may be considered normal, provided the shoot is not decayed.

(iv) Root system: Strong primary root and seminal roots. Adventitious roots may start to develop from the mesocotyl or coleoptilar node within the test period.

(2) Abnormal seedling description.

(i) Shoot:

(A) Missing.

(B) Thickened and shortened.

(C) No leaf.

(D) Leaf extending less than halfway up into the coleoptile.

(E) Leaf extensively shredded or split.

(F) Spindly or watery.

(G) Deep open cracks in the mesocotyl.

(ii) Root:

(A) None.

(B) Weak, stubby, or missing primary root with weak seminal roots.

(iii) Seedling:

(A) Decayed at point of attachment to the scutellum.

(B) One or more essential structures impaired as a result of decay from primary infection.

(C) Albino.

(d) Johnsongrass, sorghum, sorgrass, sorghum almum, sudangrass, and sorghum-sudangrass.

(1) General description.

(i) Germination habit: Hypogeal monocot.

(ii) Food reserves: Endosperm. The scutellum is a modified cotyledon which is in direct contact with endosperm. During germination the scutellum remains inside the seed to absorb nutrients from the endosperm and transfer them to the growing seedling.

(iii) Shoot system: The shoot consists of the coleoptile, leaves enclosed in the coleoptile, and the mesocotyl. The coleoptile elongates and pushes through the soil surface; the mesocotyl usually elongates. Areas of natural, reddish pigmentation may develop on the mesocotyl and coleoptile. Splitting of the coleoptile occurs naturally as a result of growth and emergence of the leaves.

(iv) Root system: A long primary root, usually with secondary roots developing within the test period. Adventitious roots may start to develop from the mesocotyl or coleoptilar node within the test period. Areas of natural, reddish pigmentation may develop on the root.

(2) Abnormal seedling description.

(i) Shoot:

(A) Missing.

(B) Thickened and shortened.

(C) No leaf.

(D) Leaf extending less than halfway up into the coleoptile.

(E) Leaf extensively shredded or split.

(F) Spindly or watery.

(G) Deep open cracks in the mesocotyl.

(ii) Root:

(A) None.

(B) Damaged or weak primary root with less than two strong secondary roots.

(iii) Seedling:

(A) Decayed at point of attachment to the scutellum.

(B) One or more essential structures impaired as a result of decay from primary infection.

(C) Albino.

(e) Grasses and millets.

(1) General description.

(i) Germination habit: Hypogeal monocot.

(ii) Food reserves: Endosperm. The scutellum is a modified cotyledon which is in direct contact with the endosperm. During germination the scutellum remains inside the seed to absorb nutrients from the endosperm and transfer them to the growing seedling.

(iii) Shoot system: The shoot consists of the coleoptile, leaves enclosed in the coleoptile, and the mesocotyl. The coleoptile elongates and pushes through the soil surface. The mesocotyl may or may not elongate significantly, depending on the kind. Splitting of the coleoptile occurs naturally as a result of growth and emergence of the leaves.

(iv) Root system: A long primary root. Secondary or adventitious roots may develop within the test period. In certain kinds (e.g. bermudagrass) the primary root may not be readily visible because it is coiled inside the tightly fitting lemma and palea. At the time of evaluation, the glumes should be removed and the root observed. Such seedlings are classified as normal if the primary root has developed. For Kentucky bluegrass, a primary root 1/16 inch (1.6 mm) or more in length is classified as normal.

(2) Abnormal seedling description.

(i) Shoot:

(A) Missing.

(B) Short, thick, and grainy.

(C) No leaf.

(D) Leaf extending less than halfway up into the coleoptile.

(E) Leaf extensively shredded or split.

(F) Spindly or watery.

(G) Deep open cracks in the mesocotyl.

(ii) Root:

(A) Missing or defective primary root even if other roots are present.

(B) Spindly, stubby, or watery primary root.

(iii) Seedling:

(A) Decayed at point of attachment to the scutellum.

(B) One or more essential structures impaired as a result of decay from primary infection.

(C) Albino.

(D) Yellow (when grown in light).

(E) Endosperm obviously detached from the root-shoot axis (e.g. kernel lifted away by the growing shoot).

§ 201.56–6 Legume or pea family, Fabaceae (Leguminosae).

Kinds of seed: Alfalfa, alyceclover, asparagusbean, beans (Phaseolus spp.), Florida beggarweed, black medic, broadbean, burclovers, buttonclover, chickpea, clovers (Trifolium spp.), cowpea, crotalarias, crownvetch, guar, hairy indigo, kudzu, lentil, lespedezas, lupines, northern sweetvetch, peas, peanut, roughpea, sainfoin, sesbania, sourclover, soybean, sweetclovers, trefoils, velvetbean, and vetches.

(a) Field bean, garden bean, lima bean, mung bean, asparagusbean, and cowpea.

(1) General description.

(i) Germination habit: Epigeal dicot.

(ii) Food reserves: Cotyledons which are large and fleshy.

(iii) Shoot system: The hypocotyl elongates and carries the cotyledons above the soil surface. The epicotyl elongates, causing the terminal bud to emerge from between the cotyledons; the primary leaves expand rapidly.

(iv) Root system: A long primary root with secondary roots.

(2) Abnormal seedling description.

(i) Cotyledons:

(A) For garden bean (Phaseolus vulgaris in part), remove any attached seed coats at the end of the test period for evaluation of cotyledons:

(*1*) Less than half of the original cotyledon tissue remaining attached.

(*2*) Less than half of the original cotyledon tissue free of necrosis or decay.

(B) All other kinds:

(*1*) Both missing and the seedling generally weak.

(ii) Epicotyl:

(A) Missing.

(B) Deep open cracks.

(C) Malformed, such as markedly curled or thickened.

(D) Less than one primary leaf.

(E) Primary leaves too small in proportion to the rest of the seedling, usually associated with visible defects of, or damage to, the main stem of the epicotyl.

(F) Terminal bud missing or damaged. (If a few seedlings with total or partial

decay to the epicotyl are found, they may be classified as normal, provided the hypocotyl and root are normal. The epicotyl on such seedlings usually does not decay when grown in a fairly dry environment and exposed to light. A retest, preferably in soil or sand, will aid in interpretation of such seedlings.)

(iii) Hypocotyl:

(A) Deep open cracks extending into the conducting tissue. (A healed break, sometimes referred to as a "knee," is considered normal.)

(B) Malformed, such as markedly shortened, curled, or thickened. (Hypocotyl stunting or curling may be caused by seedling orientation or constriction on or in the substratum.) (Hypocotyl collar rot is the breakdown of hypocotyl tissue initially characterized by a watery appearance and collapse of the hypocotyl below the cotyledonary node. The area later becomes discolored, shrivelled, and necrotic. The condition is caused by insufficient calcium available to the seedling. If hypocotyl collar rot is observed on seedlings of garden bean, the sample involved shall be retested in accordance with § 201.58(b)(12).)

(iv) Root:

(A) None.

(B) Weak, stubby, or missing primary root with weak secondary or adventitious roots. (A root bound within a tough seed coat is considered normal.)

(v) Seedling:

(A) One or more essential structures impaired as the result of decay from primary infection. (Secondary infection is common in towel and blotter tests. Some pathogens, such as Fusarium, Phomopsis, and Rhizoctonia, can spread through the substratum and infect seedlings some distance away from the primary source. Seedlings with secondary infection are to be classified as normal. A retest in sand or soil may be advisable.)

(B) Albino.

(b) Adzuki bean, broadbean, chickpea, field pea, lentil, pea, roughpea, runner bean, velvetbean, and vetches.

(1) General description.

(i) Germination habit: Hypogeal dicot.

(ii) Food reserves: Cotyledons which are large and fleshy, and remain enclosed within the seed coat beneath the soil surface. They are usually not photosynthetic.

(iii) Shoot system: The epicotyl elongates and carries the terminal bud and primary leaves above the soil surface. The stem bears one or more scale leaves and, prior to emergence, is arched near the apex, causing the terminal bud to be pulled through the soil; after emergence, the stem straightens. For practical purposes, the hypocotyl is not discernible and is not an evaluation factor. Buds in the axils of each cotyledon and scale leaf usually remain dormant unless the terminal bud is seriously damaged. In this case, one or more axillary buds may start to develop into a shoot. If the axillary shoot is well-developed, it may be considered normal.

(iv) Root system: A long primary root with secondary roots.

(2) Abnormal seedling description.

(i) Cotyledons:

(A) Less than half of the original tissue remaining attached.

(B) Less than half of the original tissue free of necrosis or decay.

(ii) Epicotyl:

(A) Missing.

(B) Less than one primary leaf.

(C) Malformed such as markedly shortened, curled, or thickened.

(D) Severely damaged (e.g. terminal bud missing or damaged) with only a weak shoot developing from the axil of a cotyledon or scale leaf.

(E) Two weak and spindly shoots.

(F) Deep open cracks extending into the conducting tissue.

(iii) Root:

(A) None.

(B) Weak, stubby, or missing primary root with weak secondary roots.

(iv) Seedlings:

(A) One or more essential structures impaired as a result of decay from primary infection. (Secondary infection is common in towel and blotter tests. Some pathogens can spread through the substratum and infect seedlings some distance away from the primary source. Seedlings with secondary infection are classified as normal. A retest in sand or soil may be advisable.)

(B) Albino.

(c) Soybean and lupine.

(1) General description.

(i) Germination habit: Epigeal dicot.

(ii) Food reserves: Cotyledons, which are large and fleshy; they expand and become photosynthetic.

(iii) Shoot system: The hypocotyl elongates and carries the cotyledons above the soil surface. The primary leaves usually increase in size and the epicotyl may elongate within the test period.

(iv) Root system: A long primary root with secondary roots.

(2) Abnormal seedling description.

(i) Cotyledons.

(A) Less than half of the original cotyledon tissue remaining attached.

(B) Less than half of the original cotyledon tissue free of necrosis or decay.

(ii) Epicotyl.

(A) Missing.

(B) Less than one primary leaf.

(C) Deep open cracks.

(D) Terminal bud damaged, missing, or decayed. (If a few seedlings with partial decay of the epicotyl are found they may be classified as normal, provided the hypocotyl and root are normal. The epicotyl on such seedlings usually does not decay when grown in a fairly dry environment and is exposed to light. A retest, preferably in soil or sand, will aid in interpretation of such seedlings.)

(iii) Hypocotyl:

(A) Deep open cracks extending into the conducting tissue. (Adventitious roots may occur at the site of injury, particularly on the hypocotyl and near the base of the cotyledons. The seedling is classified as normal if the injury is healed over and other essential structures are normal.)

(B) Malformed, such as markedly shortened, curled, or thickened. (Hypocotyl development is slow until the roots start functioning. Caution should be exercised to ensure slow seedlings are not classified as abnormal. Hypocotyl stunting or curling also may be caused by seedling orientation or constriction on or in the substratum.)

(iv) Root:

(A) None.

(B) Weak, stubby, or missing primary root with weak secondary or adventitious roots. (Roots of seedlings on "Kimpak" with insufficient moisture may not become established and hypocotyl elongation may appear to be abnormal. There may be curling of the root and hypocotyl. When a number of seedlings are observed with this condition, the sample should be retested.)

(v) Seedlings:

(A) One or more essential structures impaired as a result of decay from primary infection. (Secondary infection is common in towel and blotter tests. Some pathogens, such as Fusarium, Phomopsis, and Rhizoctonia, can spread through the substratum and infect seedlings some distance away from the primary source. Seedlings with secondary infection are to be classified as normal. A retest in sand or soil may be advisable.)

(B) Albino.

(d) Peanut.

(1) General description.

(i) Germination habit: Epigeal dicot.

(ii) Food reserves: Cotyledons, which are large and fleshy.

(iii) Shoot system: The cotyledons are carried to the soil surface by the hypocotyl which is very thick, narrowing abruptly at the root. Elongation of the hypocotyl stops when the epicotyl is exposed to light at the soil surface. The primary leaves are

compound and usually expand during the test period.

(iv) Root system: A long primary root with secondary roots. Adventitious roots develop from the base of the hypocotyl if the primary root is damaged.

(2) Abnormal seedling description.

(i) Cotyledons:

(A) Less than half of the original cotyledon tissue remaining attached.

(B) Less than half of the original cotyledon tissue free of necrosis or decay.

(ii) Epicotyl:

(A) Missing.

(B) Less than one primary leaf.

(C) Deep open cracks.

(D) Terminal bud damaged, missing, or decayed.

(iii) Hypocotyl:

(A) Deep open cracks extending into the conducting tissue.

(B) Malformed, such as markedly shortened or curled. (Hypocotyls remain somewhat thickened and may appear to be stunted. Light, depth of planting, and substratum moisture all contribute to the length of the hypocotyl. Hypocotyl stunting or curling may be caused by seedling orientation or constriction in the substratum. Seedlings planted in a soil test with the radicle too close to the surface may send roots above the soil and appear to exhibit negative geotropism and a distorted, U-shaped hypocotyl.

(iv) Root:

(A) None.

(B) Weak, stubby, or missing primary root with weak secondary or adventitious roots.

(v) Seedling:

(A) One or more essential structures impaired as a result of primary infection.

(B) Albino.

(e) Alfalfa, alyceclover, Florida beggarweed, black medic, burclovers, buttonclover, milkvetch, clovers, crotalarias, crownvetch, guar, hairy indigo, kudzu, lespedezas, northern sweetvetch, sainfoin, sesbania, sourclover, sweetclovers, and trefoils.

(1) General description.

(i) Germination habit: Epigeal dicot.

(ii) Food reserve: Cotyledons, which are small and fleshy; they expand and become photosynthetic. The cotyledons of sub clover develop elongated petioles.

(iii) Shoot system: The hypocotyl elongates and carries the cotyledons above the soil surface. The epicotyl usually does not show any development within the test period.

(iv) Root system: A long, tapering primary root, usually with root hairs. Secondary roots may or may not develop within the test period, depending on the kind.

(2) Abnormal seedling description.

(i) Cotyledons:

(A) Less than half of the original cotyledon tissue remaining attached. (Breaks at the point of attachment of the cotyledons to the hypocotyl are common in seeds which have been mechanically damaged. It is important that seedlings not be removed during preliminary counts unless development is sufficient to allow the conditions of the cotyledons to be determined. If the point of attachment of the cotyledons cannot be seen at the end of the test, the seed coat should be peeled back to determine whether a break has occurred.)

(B) Less than half of the original cotyledon tissue free of necrosis or decay.

(ii) Epicotyl:

(A) Missing. (May be assumed to be present if both cotyledons are intact.)

(iii) Hypocotyl:

(A) Deep open cracks extending into the conducting tissue.

(B) Malformed, such as markedly shortened, curled, or thickened. (Seedlings of sainfoin which have been constricted by growing through the netting of the pod, but which are otherwise normal, are classified as normal.)

(C) Weak and watery.

(iv) Root:

(A) None.

(B) Primary root stubby. (The roots of sweetclovers may be stubby when grown on artificial substrata due to the presence of coumarin in the seed; since this condition usually does not occur in soil, such seedlings are classified as normal. Roots may appear stubby as a result of being bound by the seed coat; such seedlings are classified as normal. Crownvetch produces phytotoxic effects similar to sweetclovers.)

(C) Split extending into the hypocotyl.

(v) Seedling:

(A) One or more essential structures impaired as a result of decay from primary infection.

(B) Albino.

§ 201.56–7 Lily family, Liliaceae.

Kinds of seed: Asparagus, chives, leek, onion, and Welsh onion.

(a) Asparagus.

(1) General description.

(i) Germination habit: Hypogeal monocot.

(ii) Food reserves: Endosperm which is hard, semi-transparent, and non-starchy; minor reserves in the cotyledon. The endosperm surrounds the entire embryo.

(iii) Cotyledon: A single cylindrical cotyledon; following germination, all but the basal end remains embedded in the endosperm to absorb nutrients.

(iv) Shoot system: The epicotyl elongates and carries the terminal bud above the soil surface. The epicotyl may bear several small scale leaves. A short hypocotyl is barely distinguishable, joining the root to the basal end of the cotyledon. More than one shoot may arise simultaneously, and the seedling may be considered normal if at least one shoot is well-developed and has a terminal growing point, provided other essential structures are normal.

(v) Root system: A long slender primary root.

(2) Abnormal seedling description.

(i) Cotyledon:

(A) Detached from seedling.

(B) Deep open cracks at basal end.

(ii) Epicotyl:

(A) Missing.

(B) Terminal bud missing or damaged.

(C) Deep open cracks.

(D) Malformed, such as markedly shortened, curled, or thickened.

(E) Spindly.

(F) Watery.

(iii) Hypocotyl:

(A) Deep open cracks.

(iv) Root:

(A) No primary root.

(B) Stubby primary root with weak secondary roots.

(v) Seedling:

(A) One or more essential structures impaired as a result of decay from primary infection.

(B) Albino.

(b) Chives, leek, onion, Welsh onion.

(1) General description.

(i) Germination habit: Epigeal monocot.

(ii) Food reserves: Endosperm which is hard, semi-transparent, and non-starchy; minor reserves in the cotyledon.

(iii) Cotyledon: A single cylindrical cotyledon. The cotyledon emerges with the seed coat and endosperm attached to the tip. A sharp bend known as the "knee" forms; continued elongation of the cotyledon on each side of this knee pushes it above the soil surface. The cotyledon tip is pulled from the soil and straightens except for a slight kink which remains at the site of the knee.

(iv) Shoot system: The first foliage leaf emerges through a slit near the base of the cotyledon, but this does not usually occur during the test period. The hypocotyl is a very short transitional zone between the primary root and the cotyledon, and is not distinguishable for purposes of seedling evaluation.

(v) Root system: A long slender primary root with adventitious roots developing from the hypocotyl. The primary root does not develop secondary roots.

(2) Abnormal seedling description.
(i) Cotyledon:
(A) Short and thick.
(B) Without a definite bend or "knee".
(C) Spindly or watery.
(ii) Epicotyl:
(A) Not observed during the test period.
(iii) Hypocotyl:
(A) Not evaluated.
(iv) Root:
(A) No primary root.
(B) Short, weak, or stubby primary root.
(v) Seedling:
(A) One or more essential structures impaired as a result of decay from primary infection.
(B) Albino.

§ 201.56–8 Flax family, Linaceae.

Kind of seed: Flax.
(a) General description.
(1) Germination habit: Epigeal dicot. (Due to the mucilaginous nature of the seed coat, seedlings germinated on blotters may adhere to the blotter and appear to be negatively geotropic.)
(2) Food reserves: Cotyledons which expand and become photosynthetic.
(3) Shoot system: The hypocotyl elongates carrying the cotyledons above the soil surface. The epicotyl usually does not show any development within the test period.
(4) Root system: A primary root, with secondary roots usually developing within the test period.
(b) Abnormal seedling description.
(1) Cotyledons:
(i) Less than half of the original cotyledon tissue remaining attached.
(ii) Less than half of the original cotyledon tissue free of necrosis or decay.
(2) Epicotyl:
(i) Missing. (May be assumed to be present if cotyledons are intact.)
(3) Hypocotyl:
(i) Deep open cracks extending into the conducting tissue.
(ii) Malformed, such as markedly shortened, curled, or thickened.
(4) Root:
(i) None.
(ii) Weak, stubby, or missing primary root with weak secondary or adventitious roots.
(5) Seedling:
(i) One or more essential structures impaired as a result of decay from primary infection.
(ii) Albino.

§ 201.56–9 Mallow family, Malvaceae.

Kinds of seed: Cotton, kenaf, and okra.
(a) General description.
(1) Germination habit: Epigeal dicot.
(2) Food reserve: Cotyledons, which are convoluted in the seed; they expand and become thin, leaf-like, and photosynthetic.
(3) Shoot system: The hypocotyl elongates carrying the cotyledons above the soil surface. The epicotyl usually does not show any development within the test period. Areas of yellowish pigmentation may develop on the hypocotyl in cotton.
(4) Root system: A primary root, with secondary roots usually developing within the test period. Areas of yellowish pigmentation may develop on the root in cotton.
(b) Abnormal seedling description.
(1) Cotyledons:
(i) Less than half of the original cotyledon tissue remaining attached.
(ii) Less than half of the original cotyledon tissue free of necrosis or decay. (Remove any attached seed coats at the end of the test period for evaluation of cotyledons.)
(2) Epicotyl:
(i) Missing. (May be assumed to be present if both cotyledons are intact.)
(3) Hypocotyl:
(i) Deep open cracks or grainy lesions extending into the conducting tissue.
(ii) Malformed, such as markedly shortened, curled, or thickened.
(4) Root:
(i) None.
(ii) Weak, stubby, or missing primary root with weak secondary or adventitious roots.
(5) Seedling:
(i) One or more essential structures impaired as a result of decay from primary infection. (A cotton seedling with yellowish areas on the root or hypocotyl is classified as normal, provided the cotyledons are free of infection.)
(ii) Albino.

§ 201.56–10 Spurge family, Euphorbiaceae.

Kind of seed: Castorbean.
(a) General description.
(1) Germination habit: Epigeal dicot.
(2) Food reserves: Cotyledons, which are thin and leaf-like; endosperm (fleshy food-storage organs) usually persisting in the laboratory test.
(3) Shoot system: The hypocotyl lengthens, carrying the cotyledons, endosperm, and epicotyl above the soil surface.
(4) Root system: A primary root, with secondary roots usually developing within the test period.
(b) Abnormal seedling description.
(1) Cotyledons:
(i) Less than half of the original cotyledon tissue remaining attached.
(ii) Less than half of the original cotyledon tissue free of necrosis or decay.
(2) Endosperm:
(i) Missing.
(3) Epicotyl:
(i) Missing.
(ii) Damaged or missing terminal bud.
(4) Hypocotyl:
(i) Deep open cracks extending into the conducting tissue.
(ii) Malformed, such as markedly shortened, curled, or thickened.
(5) Root:
(i) None.
(ii) Weak, stubby, or missing primary root with weak secondary or adventitious roots.
(6) Seedling:
(i) One or more essential structures impaired as a result of decay from primary infection.
(ii) Albino.

§ 201.56–11 Knotweed family, Polygonaceae.

Kinds of seed: Buckwheat, rhubarb, and sorrel.
(a) General description.
(1) Germination habit: Epigeal dicot.
(2) Food reserves: Cotyledons, starchy endosperm.
(3) Shoot system: The hypocotyl elongates carrying the cotyledons above the soil surface. The epicotyl usually does not show any development within the test period.
(4) Root system: A primary root, with secondary roots developing within the test period for some kinds.
(b) Abnormal seedling description.
(1) Cotyledons:
(i) Less than half of the original cotyledon tissue remaining attached.
(ii) Less than half of the original cotyledon tissue free of necrosis or decay.
(2) Epicotyl:
(i) Missing. (May be assumed to be present if cotyledons are intact.)
(3) Hypocotyl:
(i) Deep open cracks or grainy lesions extending into the conducting tissue.
(ii) Malformed, such as markedly shortened, curled, or thickened.
(iii) Watery.
(4) Root:
(i) None.
(ii) Weak, stubby, or missing primary root with weak secondary or adventitious roots.
(5) Seedling:
(i) One or more essential structures impaired as a result of decay from primary infection.
(ii) Albino.

§ 201.56–12 Miscellaneous plant families.

Kinds of seed by family:

Carrot family, Apiaceae (Umbelliferae)—carrot, celery, celeriac, dill, parsley, parsnip;

Hemp family, Cannabaceae—hemp;
Dichondra family, Dichondraceae—dichondra;
Geranium family, Geraniaceae—alfilaria;
Mint family, Lamiaceae (Labiatae)—sage, summer savory;
Benne family, Pedaliaceae—sesame;
Rose family, Rosaceae—little burnet;
Nightshade family, Solanaceae—eggplant, tomato, husk tomato, pepper, tobacco; and
Valerian family, Valerianaceae—cornsalad.

(a) General description.

(1) Germination habit: Epigeal dicot.

(2) Food reserves: Cotyledons; endosperm may or may not be present, depending on the kind.

(3) Shoot system: The hypocotyl elongates, carrying the cotyledons above the soil surface. The epicotyl usually does not show any development within the test period.

(4) Root system: A primary root; secondary roots may or may not develop within the test period, depending on the kind.

(b) Abnormal seedling description.

(1) Cotyledons:

(i) Less than half of the original cotyledon tissue remaining attached.

(ii) Less than half of the original cotyledon tissue free of necrosis or decay.

(2) Epicotyl:

(i) Missing. (May be assumed to be present if the cotyledons are intact.)

(3) Hypocotyl:

(i) Malformed, such as markedly shortened, curled, or thickened.

(ii) Deep open cracks extending into the conducting tissue.

(iii) Watery.

(4) Root:

(i) None.

(ii) Missing or stubby primary root with weak secondary or adventitious roots.

(5) Seedling:

(i) One or more essential structures impaired as a result of decay from primary infection.

(ii) Albino.

31. In § 201.57a, paragraph (b) is revised and a new paragraph (c) is added to read as follows:

§ 201.57a Dormant Seeds.

* * * * *

(b) The percentage of dormant seed, if present, shall be determined in addition to the percentage of germination for the following kinds: Bahiagrass (Paspalum notatum), basin wildrye (Leymus cinereus), bluestems (Andropogon gerardii var. gerardii, Androdogon gerardii var. paucipilus, Bothriochloa ischaemum, and Schizachyrium scoparium), bottlebrush-squirreltail (Elymus elymoides), buffalograss (Buchloe dactyloides), buffelgrass (Cenchrus ciliaris), galletagrass (Hilaria jamesii), forage kochia (Kochia prostrata), gramas (Bouteloua spp.), Indian ricegrass (Oryzopsis hymenoides), johnsongrass (Sorghum halepense), lovegrasses (Eragrostis spp.), mountain rye (Secale montanum), sand dropseed (Sporobolus cryptandrus), smilo (Oryzopsis miliacea), switchgrass (Panicum virgatum), veldtgrass (Ehrharta calycina), western wheatgrass (Elymus smithii), and yellow indiangrass (Sorghastrum nutans).

(c) For green needlegrass (Stipa viridula), if the test result of method 2 is less than the result of method 1, subtract the result of method 2 from method 1 and report the difference as the percentage of dormant seed. Refer to § 201.58(b)(7).

32. Section 201.58 is amended by revising the introductory text, paragraphs (a)(5), (b)(1) through (b)(4), adding a new paragraph (b)(7); revising paragraphs (b)(10), (b)(12), Table 2, and adding a new paragraph (c) to read as follows:

§ 201.58 Substrata, temperature, duration of test, and certain other specific directions for testing for germination and hard seed.

Specific germination requirements are set forth in table 2 to which the following paragraphs (a), (b), and (c) are applicable.

* * * * *

(a) * * *

(5) *Prechill.* The term "prechill" means a cold, moist treatment applied to seeds to overcome dormancy prior to the germination test. The prechill method varies among kinds, but is usually performed by holding imbibed seeds at a low temperature for a specified period of time. The prechill period is not included in the duration of tests given in table 2, unless otherwise specified.

* * * * *

(b) * * *

(1) *Alyce clover. (Alysicarpus vaginalis);* swollen seeds. At the conclusion of the 21-day test period, carefully pierce the seed coat with a sharp instrument and continue the test for 5 additional days. Alternate method: The swollen seeds may be placed at 20° C for 48 hours and then at 35° C for 3 additional days.

(2) *Bahiagrass (Paspalum notatum);* removal of glumes. On all varieties except "Pensacola," remove the enclosing structures (glumes, lemma, and palea) from the caryopsis with the aid of a sharp scalpel. If the seed is fresh or dormant, lightly scratch the surface of the caryopsis.

(3) *Beet, Swiss chard (Beta);* preparation of seed for test. Before the seeds are placed on the germination substratum, they shall be soaked in water for 2 hours, using at least 250 mL of water per 100 seeds, then washed in running water and the excess water blotted off. The temperature of the soaking and washing water should be no lower than 20° C. Samples producing excessive discoloration of the hypocotyl or root should be retested in soil or by washing in running water for 3 hours and testing on "Kimpak," keeping the seed covered with slightly moist blotters. Sugar beets may require 16 hours soaking in water at 25° C, followed by rinsing and then drying for 2 hours at room temperature.

(4) *Buffelgrass (Cenchrus ciliaris); alternate method for dormant seed. The caryopses shall be removed from the fascicles and placed on blotters moistened with a 0.2 percent solution of* KNO_3, in petri dishes. The seeds from a fascicle should be arranged so they will not be confused with seeds from other fascicles during the test. The seeds are then prechilled at 5° C for 7 days and tested at 30° C in light for 21 additional days. Firm ungerminated seeds remaining at the conclusion of the test should be scratched lightly and left in test for 7 additional days.

* * * * *

(7) *Green needlegrass (Stipa viridula);* two test methods as prescribed in table 2 shall be used on each sample:

(i) For method 1, acid scarify 400 seeds for 10 minutes in concentrated sulfuric acid (95 to 98 percent H_2SO_4). Rinse seeds and dry on blotters for 16 hours, then place seeds on blotters moistened with a solution of 0.055 percent (500 ppm gibberellic acid GA_3) and 0.46 percent (3,000 ppm) thiram and germinate 14 days.

(ii) For method 2, plant 400 seeds on blotters moistened with a 0.2 percent solution of KNO_3 and germinate 14 days. Refer to § 201.57a(c).

(iii) Report the results of method 2 as the percentage germination. If the number in method 2 is less than method 1, subtract the results of method 2 from method 1 and report the difference as dormant seed.

* * * * *

(10) *Ryegrass (Lolium);* fluorescence test. The germination test for fluorescence of ryegrass shall be conducted in light [not to exceed 100 foot candles (1,076 lux)] with white filter paper as the substratum. The white filter paper should be nontoxic to the roots of ryegrass and of a texture that will resist penetration of ryegrass roots. Distilled or deionized water shall be used to moisten the filter paper. The test shall be conducted in a manner that will prevent the contact of roots of different

seedlings. Roots of some seedlings produce fluorescent lines on white filter paper when viewed under ultraviolet light. First counts shall not be made before the eighth day; at that time remove only normal fluorescent seedlings. Evaluation of fluorescence shall be made under F15T8–BLB or comparable ultraviolet tubes in an area where light from other sources is excluded. If there are over 75 percent normal fluorescent seedlings present at the time of the first count, break the contact of the roots of the nonfluorescent seedlings from the substratum and reread the fluorescence at the time of the final count. At the final count, lift each remaining seedling, observing the path of each root since sometimes faint fluorescence will show on the substratum as the root is lifted. Abnormal seedlings and dead seeds are not evaluated for fluorescence. See § 201.58a(a).

* * * * *

(12) *Garden bean (Phaseolus vulgaris);* use of calcium nitrate. If hypocotyl collar rot is observed on seedlings, the sample involved shall be retested using a 0.3 to 0.6 percent solution of calcium nitrate ($CaNO_3$) to moisten the substratum.

* * * * *

(c) Procedures for coated seed:

(1) Germination tests on coated seed shall be conducted in accordance with methods in paragraphs (a) and (b) of this section. However, kinds for which soaking or washing is specified in paragraph (b) shall not be soaked or washed in the case of coated seed.

(i) Coated seed units shall be placed on the substratum in the condition in which they are received without rinsing, soaking, or any other pretreatment.

(ii) Coated seed units in mixtures which are color coded or can otherwise be separated by kinds shall be germinated as separate kinds without removing the coating material.

(iii) Coated seed units in mixtures which cannot be separated by kinds without removing the coating material shall be de-coated and germinated as separate kinds. The coating material shall be removed in a manner that will not affect the germination capacity of the seeds.

(2) The moisture level of the substratum is important. It may depend on the water-absorbing capacity of the coating material. A retest may be necessary before satisfactory germination of the sample is achieved.

(3) Phytotoxic symptoms may be evident when germinating coated seeds in paper substrata. In such cases a retest in sand or soil may be necessary.

TABLE 2.—GERMINATION REQUIREMENTS FOR INDICATED KINDS

Name of seed	Substrata	Temperature (°C)	First count days	Final count days	Additional directions	
					Specific requirements	Fresh and dormant seed
Agricultural Seed						
Agrotricum—x Agrotriticum.	B,T,S	20; 15	4	7	.....	Prechill at 5° or 10° C for 5 days.
Alfalfa—Medicago sativa.	B,T,S	20	4	[1]7	See ¶ (b)(11)	
Alfilaria—Erodium cicutarium.	B,T	20–30	3	14	Clip seeds	
Alyceclover—Alysicarpus vaginalis.	B,T	35	4	[1]21	See ¶ (b)(1) for swollen seeds.	
Bahiagrass—paspalum notatum: Var. Pensacola.	P,S	20–35	7	28	Light; see ¶ (b)(2)	See § 201.57a.
All other vars	P	30–35	3	21	Light; remove glumes; see ¶ (b)(2).	Scratch caryopses; KNO_3; see § 201.57a.
Barley—Hordeum vulgare	B,T,S	20; 15	4	7	.....	Prechill 5 days at 5° or 10° C or predry.
Barrelclover—Medicago truncatula.	B,T	20	4	[1]14	Remove seeds from bur; see ¶ (b)(11).	
Bean:						
Adzuki—Vigna angularis.	B,T,S	20–30	4	[1]10		
Field—Phaseolus vulgaris.	B,T,S,TC	20–30; 25	5	[1]8		
Mung—Vigna radiata	B,T,S	20–30	3	[1]7		
Beet, field—Beta vulgaris subsp., vulgaris.	B,T,S	20–30	3	14	See ¶ (b)(3)	
Beet, sugar—Beta vularis subsp., vulgaris.	B,T,S	20–30; 20	3	10	See ¶ (b)(3)	
Beggarweed, Florida—Desmodium tortuosum.	B,T	30	5	[1]28		
Bentgrass:						
Colonial (incl. vars. Astoria and Highland)—Agrostis capillaris.	P	15–30; 10–30; 15–25	7	28	Light; KNO_3	Prechill at 5° or 10° C for 7 days.
Creeping—Agrostis stolonifera var. palustris.	P	15–30; 10–30; 15–25	7	28	Light; KNO_3	Prechill at 5° or 10° C for 7 days.
Velvet—Agrostis canina.	P	15–25; 20–30	7	21	Light; KNO_3	

TABLE 2.—GERMINATION REQUIREMENTS FOR INDICATED KINDS—Continued

Name of seed	Substrata	Temperature (°C)	First count days	Final count days	Additional directions	
					Specific requirements	Fresh and dormant seed
Bermudagrass—Cynodon dactylon var. dactylon.	P	20–35	7	21	Light; KNO_3; see ¶ (a)(9).	
Bermudagrass, giant—Cynodon dactylon var. aridus.	P	20–35	7	21	Light; KNO_3; see¶ (a)(9).	Prechill at 10° C for 7 days and then test at 20–35° C; continue tests of hulled seed for 14 days and of unhulled seed for 21 days.
Bluegrass:						
Annual—Poa annua .	P	20–30	7	21	Light	
Bulbous—Poa bulbosa.	P,S	10	10	35	KNO_3 or soil	Prechill all samples at 5° C for 7 days.
Canada—Poa compressa.	P	15–25; 15–30	10	28	Light; KNO_3	10–30° C.
Glaucantha—Poa glaucantha.	P	15–25; 15–30	10	28	Light; KNO_3	
Kentucky—Poa pratensis All vars..	P	15–25; 15–30	10	28	Light; KNO_3	Prechill at 10° C for 5 days.
Nevada—Poa nevadensis.	P	20–30	7	21	Light; KNO_3	
Rough—Poa trivialis	P	20–30	7	21	Light	
Texas—Poa arachnifera.	P	20–30	7	28	Light; KNO_3	Prechill at 5° C for 2 weeks.
Wood—Poa nemoralis.	P	20–30	7	28	Light	
Bluejoint—Calamagrostis canadensis.	TB,P	15–25	10	21	Light and KNO_3 optional.	Prechill at 5° C for 5 days.
Bluestem:						
Big—Andropogon gerardii var. gerardii.	P,TS	20–30	7	14	Light; KNO_3	Prechill at 5° C for 2 weeks; see §201.57a.
Little—Schizachyrium scoparium.	P,TS	20–30	7	14	Light; KNO_3	Prechill at 5° C for 2 weeks; see §201.57a.
Sand—Andropogon gerardii var. paucipilus.	P,TS	20–30	7	14	Light; KNO_3	Prechill at 5° C for 2 weeks; see §201.57a.
Yellow—Bothriochloa ischaemum.	P,TS	20–30	5	14	Light; KNO_3	Prechill at 5° C for 2 weeks; see §201.57a.
Bottlebrush-squirreltail—Elymus elymoides.	P,B	20; 15	10	14	.....	See §201.57a.
Brome:						
Field—Bromus arvensis.	P,TB	15–25; 20–30	6	14	Light	Prechill at 10° C for 5 days.
Meadow—Bromus biebersteinii.	B,T,TB	20–30	6	14	Light optional	
Mountain—Bromus marginatus.	P	20–30	6	14	Light	
Smooth—Bromus inermis.	P,B,TB	20–30	6	14	Light optional	Prechill at 5° or 10° C for 5 days, then test at 30° C for 9 additional days.
Broomcorn—Sorghum bicolor.	B,T,S	20–30	3	10		
Buckwheat—Fagopyrum esculentum.	B,T	20–30	3	6		
Buffalograss—Buchloe dactyloides: (Burs).	P,TB,TS	20–35	7	28	Light; KNO_3	Prechill at 5° C for 6 weeks; test 14 additional days; see §201.57a.
(Caryopses)	P	20–35	5	14	Light; KNO_3	See §201.57a.
Buffelgrass—Cenchrus ciliaris.	S	30	7	28	Light; press fascicles into well-packed soil and prechill at 5° C for 7 days.	See ¶ (b)(4); see §201.57a.
Burclover, California-Medicago polymorpha.	B,T	20	4	[1]14	Remove seeds from bur; see ¶ (b)(11).	
Burclover, spotted—Medicago arabica.	B,T	20	4	[1]14	Remove seeds from bur; see ¶ (b)(11).	
Burnet, Little—Sanguisorba minor.	B,T	15	5	14		

TABLE 2.—GERMINATION REQUIREMENTS FOR INDICATED KINDS—Continued

Name of seed	Substrata	Temperature (°C)	First count days	Final count days	Additional directions	
					Specific requirements	Fresh and dormant seed
Buttonclover—Medicago orbicularis.	B,T	20	4	110	See ¶ (b)(11)	15° C.
Canarygrass—Phalaris canariensis.	B,T	20–30	3	7		
Canarygrass, reed—Phalaris arundinacea.	P	20–30	5	21	Light; KNO_3	
Carpetgrass—Axonopus affinis.	P	20–35	10	21	Light	KNO_3.
Castorbean—Ricinus communis.	T,S	20–30	7	14	Remove caruncle if mold interferes with test.	
Chess, soft—Bromus hordeaceus.	P	20–30	7	14	Light	Prechill at 5° or 10° C for 7 days.
Chickpea—Cicer arietinum.	T,S	20–30	3	17		
Clover:						
Alsike—Trifolium hybridum.	B,T,S	20	3	17	See ¶ (b)(11)	15° C.
Arrowleaf—Trifolium vesiculosum.	B,T	20; 15	4	114	See ¶ (b)(11)	
Berseem—Trifolium alexandrinum.	B,T,S	20	3	17	See ¶ (b)(11)	15° C.
Cluster—Trifolium glomeratum.	B,T	20	4	110	See ¶ (b)(11)	15° C.
Crimson—Trifolium incarnatum.	B,T,S	20	4	17	See ¶ (b)(11)	15° C.
Kenya—Trifolium semipilosum.	B,T,S	20	3	17		
Ladino—Trifolium repens.	B,T,S	20	3	17	See ¶ (b)(11)	15° C.
Lappa—Trifolium lappaceum.	B,T	20	3	17	See ¶ (b)(11)	15° C.
Large hop—Trifolium campestre.	B,T	20	4	114	See ¶ (b)(11)	15° C.
Persian—Trifolium resupinatum.	B,T	20	3	17	See ¶ (b)(11)	15° C.
Red—Trifolium pratense.	B,T,S	20	4	17	See ¶ (b)(11)	15° C.
Rose—Trifolium hirtum.	B,T	20	4	110	See ¶ (b)(11)	15° C.
Small hop—Trifolium dubium.	B,T	20	4	114	See ¶ (b)(11)	15° C.
Strawberry—Trifolium fragiferum.	B,T	20	3	17	See ¶ (b)(11)	15° C.
Sub—Trifolium subterraneum.	B,T	20	4	114	See ¶ (b)(11)	15° C.
White—Trifolium repens.	B,T,S	20	3	17	See ¶ (b)(11)	15° C.
Corn:						
Field—Zea mays	B,T,S,TC	20–30; 25	4	7		
Pop—Zea mays	B,T,S,TC	20–30; 25	4	7		
Cotton—Gossypium spp .	B,T,S	20–30; 30	4	112	.....	Test by alternate method; see ¶ (b)(5).
Cowpea—Vigna unguiculata subsp. unguiculata.	B,T,S	20–30	5	18		
Crambe—Crambe abyssinica.	T	25	3	7		
Crested dogtail—Cynosurus cristatus.	P	20–30	10	21	Light	Prechill at 5° or 10° C for 3 days.
Crotalaria:						
Lance—Crotalaria lanceolata.	B,T,S	20–30	4	110		
Showy—Crotalaria spectabilis.	B,T,S	20–30	4	110		

TABLE 2.—GERMINATION REQUIREMENTS FOR INDICATED KINDS—Continued

Name of seed	Substrata	Temperature (°C)	First count days	Final count days	Additional directions	
					Specific requirements	Fresh and dormant seed
Slenderleaf—Crotalaria brevidens var. intermedia.	B,T,S	20–30	4	1 10		
Striped—Crotalaria pallida.	B,T,S	20–30	4	1 10		
Sunn—Crotalaria juncea.	B,T,S	20–30	4	1 10		
Crownvetch—Coronilla varia.	B,T,S	20	7	1 14		
Dallisgrass—Paspalum dilatatum.	P	20–35	7	21	Light; KNO_3.	
Dichondra—Dichondra repens.	B,T	20–30	7	1 28		
Dropseed, sand—Sporobolus cryptandrus.	P	5–35; 15–35	5	14	Light; KNO_3	Prechill at 5° C for 4 weeks; see § 201.57a.
Emmer—Triticum dicoccon.	B,T,S	20; 15	4	7		Prechill at 5° or 10° C for 5 days or predry.
Fescue:						
Chewings—Festuca rubra subsp. commutata.	P	15–25	7	21	Light and KNO_3 optional.	Prechill at 5° or 10° C for 5 days.
Hair-Festuca tenuifolia.	P	10–25	10	28	KNO_3.	
Hard—Festuca trachyphylla.	P	15–25	7	21	Light and KNO_3 optional.	
Meadow—Festuca pratensis.	P	15–25; 20–30	5	14	Light and KNO_3 optional.	
Red—Festuca rubra subsp. rubra.	P	15–25	7	21	Light and KNO_3 optional.	
Sheep—Festuca ovina var. ovina.	P	15–25	7	21	Light and KNO_3 optional.	
Tall—Festuca arundinacea.	P	15–25; 20–30	5	14	Light and KNO_3 optional.	Prechill at 5° or 10° C for 5 days and test for 21 days.
Flax—Linum usitatissimum.	B,T,S	20–30	3	7		
Galletagrass—Hilaria jamesii.	P,B	20; 25; 20–30	4	10		See § 201.57a.
Grama:						
Blue—Bouteloua gracilis.	P,TB	20–30	7	14	Light	KNO_3; see § 201.57a.
Side-oats—Bouteloua curtipendula.	P	15–30	7	14	Light; KNO_3	See § 201.57a.
Guar—Cyamopsis tetragonoloba.	B,T,S	30; 20–30	5	1 14		
Guineagrass—Panicum maximum var. maximum.	P	15–35	10	28	Light; KNO_3 optional.	
Hardinggrass—Phalaris stenoptera.	P	10–30	7	28	Light	KNO_3.
Alternate method	P	15–25	7	14	Light; presoak at 15° C for 24 hrs.	
Hemp—Cannabis sativa	B,T	20–30	3	7		
Indiangrass, yellow—Sorghastrum nutans.	P,TS	20–30	7	14	Light; KNO_3	Prechill at 5° C for 2 weeks; see § 201.57a.
Indigo, hairy—Indigofera hirsuta.	B,T	20–30	5	1 14		
Japanese lawngrass—Zoysia japonica.	P	35–20	10	28	Light; KNO_3	
Johnsongrass—Sorghum halepense.	P	20–35	7	35	Light	KNO_3; See § 201.57a.
Kenaf—Hibiscus cannabinus.	T,B	20–30	4	1 8		
Kochia, forage—Kochia prostrata.	P	20	4	14		See § 201.57a.
Kudzu—Pueraria montana var. lobata.	B,T	20–30	5	1 14		
Lentil—Lens culinaris	B,T	20	5	1 10		

TABLE 2.—GERMINATION REQUIREMENTS FOR INDICATED KINDS—Continued

Name of seed	Substrata	Temperature (°C)	First count days	Final count days	Additional directions	
					Specific requirements	Fresh and dormant seed
Lespedeza:						
Korean—Kummerowia stipulacea.	B,T,S	20–35	5	[1]14		
Sericea—Lespedeza cuneata.	B,T,S	20–35	7	[1]21		
Siberian—Lespedeza juncea.	B,T,S	20–35	7	[1]21		
Striate—Kummerowia striata.	B,T,S	20–35	7	[1]14		
Lovegrass, sand—Eragrostis trichodes.	P	20–30	5	14	Light; KNO_3	Prechill at 5° or 10° C for 6 weeks; see §201.57a
Lovegrass, weeping—Eragrostis curvula.	P	20–35	5	14	Light; KNO_3	KNO_3; see §201.57a.
Lupine:						
Blue—Lupinus angustifolius.	B,T,S	20	4	[1]10		
White—Lupinus albus.	B,T	20	3	[1]10		
Yellow—Lupinus luteus.	B,T	20	7	[1]10		
Manilagrass—Zoysia matrella.	P	35–20	10	28	Light; KNO_3	
Meadow foxtail—Alopecurus pratensis.	P	20–30	7	14	Light	
Medic, black—Medicago lupulina.	B,T, S	20	4	[1]7	See ¶ (b)(11)	
Milkvetch—Astragalus cicer.	B,T	20	6	[1]14		
Alternate method	B,TB,T	15–25	10	[1]21		
Millet:						
Browntop—Brachiaria ramosa.	B,P,T	20–30; 30	4	14	Light and KNO_3 optional.	Predry at 35° or 40° C for 7 days and test at 30° C.
Alternate method.	B,P,T	5–35	4	14	Light; KNO_3	
Foxtail—Setaria italica.	B,T	15–30; 20–30	4	10		
Japanese—Echinochloa frumentacea.	B,T	20–30	4	10		
Pearl—Pennisetum glaucum.	B,T	20–30	3	7		
Proso—Panicum miliaceum.	B,T	20–30	3	7		
Molassesgrass—Melinis minutiflora.	P	20–30	7	21	Light	
Mustard:						
Black—Brassica nigra.	P	20–30	3	7	Light	KNO_3 and prechill at 10° C for 3 days.
India—Brassica juncea.	P	20–30	3	7	Light	Prechill at 10° C for 7 days and test for 5 days; KNO_3.
White-Sinapis alba	P	20–30	3	5	Light	
Napiergrass—Pennisetum purpureum.	B,T	20–30	3	10		
Needlegrass, green—stipa viridula:						
Method 1	P	15–30	7	14	H_2SO_4, GA_3 and thiram; dark; see ¶ (b)(7).	
Method 2	P	15–30	7	14	KNO_3; dark; see ¶ (b)(7).	
Oat—Avena spp	B,T,S	20; 15	5	10		Prechill at 5° or 10° C for 5 days and test for 7 days or predry and test for 10 days.
Oatgrass, tall—Arrhenatherum elatius.	P	20–30	6	14	Light	
Orchardgrass—Dactylis glomerata.	P,TS	15–25	7	21	Light; germination more rapid on soil.	Prechill at 5° or 10° C for 7 days.

TABLE 2.—GERMINATION REQUIREMENTS FOR INDICATED KINDS—Continued

Name of seed	Substrata	Temperature (°C)	First count days	Final count days	Additional directions	
					Specific requirements	Fresh and dormant seed
Panicgrass, blue—Panicum antidotale.	P,TS	20–30	7	28	Light	
Panicgrass, green—Panicum maximum var. trichoglume.	P	15–35	10	28	Light; KNO_3 optional	
Pea, field—Pisum sativum.	B,T,S	20	3	1 8		
Peanut—Arachis hypogaea.	B,T,S	20–30; 25	5	1 10	Remove shells	Ethephon or ethylene; see ¶ (a)(10) and (11).
Rape:						
Annual—Brassica napus var. annua.	B,T	20–30	3	7		
Bird—Brassica rapa	P	20–30	3	10	Light	KNO_3.
Turnip—Brassica rapa.	B,T	20–30	3	7		
Winter—Brassica napus var. biennis.	B,T	20–30	3	7		
Redtop—Agrostis gigantea.	P,TB	20–30	5	10	Light	KNO_3.
Rescuegrass—Bromus catharticus.	P,S	10–30	7	28	Light; see ¶ (b)(8) for alternate method.	In soil at 15° C.
Rhodesgrass—Chloris gayana.	P	20–30	6	14	Light; KNO_3	
Rice—Oryza sativa	T,S	20–30; 30	5	14	See ¶ (b)(9) for alternate method.	Presoak; see ¶ (b)(9).
Ricegrass, Indian—Oryzopsis hymenoides.	P	15	7	42		Prechill at 5° C for 4 weeks and test for 21 additional days; see §201.57a.
Alternate method	S	5–15; 15; 15–25	7	28		Dark; prechill in soil at 5° C for 4 weeks; see §201.57a.
Roughpea—Lathyrus hirsutus.	B,T	20	7	1 14		
Rye—Secale cerale	B,T,S	20; 15	4	7		Prechill at 5° or 10° C for 5 days or predry.
Rye, mountain—Secale montanum.	B,T	20; 15	4	7		See §201.57a.
Ryegrass:						
Annual—Lolium multiflorum.	P,TB	15–25	5	14	Light optional; see ¶ (b)(10) for fluorscence test.	Light; KNO_3; prechill at 5° or 10° C for 5 days and test at 15–25° C; if still dormant prechill for 3 days and continue test at 15–25° C an additional 4 days.
Intermediate—Lolium x hybridum.	P,TB	15–25	7	14	Light	KNO_3 and prechill at 5° or 10° C for 5 days and test at 15–25° C; if still dormant rechill for 3 days and continue test at 15–25° C an additional 4 days.
Perennial—Lolium perenne.	P,TB	15–25	5	14	Light optional; see ¶ (b)(1) for fluorescence test.	Light; KNO_3; prechill at 5° or 10° C for 5 days and test at 15–25° C; if still dormant rechill for 3 days and continue test at 15–25° C an additional 4 days.
Wimmera—Lolium rigidum.	P,TB	15–25; 20–30	5	14	Light optional	Light; KNO_3; prechill at 5° or 10° C for 5 days and test at 15–25° C; if still dormant rechill for 3 days and continue test at 15–25° C an additional 4 days.
Safflower—Carthamus tinctorius.	P,B,T,S	15; 20	4	14	Light at 15° C	
Sagewort, Louisiana—Artemisia ludoviciana.	P	15–25	7	14	Light	
Sainfoin—Onobrychis viciifolia.	B,T	20–30	4	1 14		
Saltbush, fourwing—Atriplex canescens.	B	20	5	14	See ¶ (b)(13)	Prechill at 5° C for 7 days.
Alternate method	B	15	.....	21		
Sesame—Sesamum indicum.	B,T,TB	20–30	3	6		

TABLE 2.—GERMINATION REQUIREMENTS FOR INDICATED KINDS—Continued

Name of seed	Substrata	Temperature (°C)	First count days	Final count days	Additional directions	
					Specific requirements	Fresh and dormant seed
Sesbania—Sesbania exaltata.	B,T	20–30	5	[1]7		
Smilo—Oryzopsis miliacea.	P	20–30	7	42	Light	Prechill at 5° C for 2 weeks; see §201.57a.
Sorghum:						
Grain and Sweet—Sorghum bicolor.	B,T,S	20–30	4	10		Prechill grain vars. at 5° or 10° C for 5 days; test sweet vars. at 30–45° C, maintaining 45° C for 2–4 hours per day.
Sorghum almum—Sorghum x almum.	T,S	20–30; 15–35	5	21		Prechill at 5° C for 5 days; on the 10th day of test, clip or pierce the distal end of ungerminated seeds.
Sorghum-sudangrass—Sorghum x drummondii.	B,T,S	20–30; 25	4	10		Prechill at 5° or 10° C for 5 days.
Sorgrass[2]	B,T,S	15–35; 20–35	5	21		Prechill at 5° or 10° C for 7 days.
Sourclover—Melilotus indicus.	B,T	20	3	[1]14	See ¶ (b)(11)	
Soybean—glycine max	B,T,S,TC	20–30; 25	5	[1]8		
Spelt—Triticum spelta	B,T,S	20; 15	4	7		Prechill at 5° or 10° C for 5 days, or predry.
Sudangrass—Sorghum x drummondii.	B,T,S	20–30; 15–30	4	10		Prechill at 10° C for 5 days.
Sunflower (Cult.)—Helianthus annuus.	T,B,	20–30	3	7		
Sweetclover:						
White—Melilotus albus.	B,T,S	20	4	[1]7	See ¶ (b)(11)	
Yellow—Melilotus officinalis.	B,T,S	20	4	[1]7	See ¶ (b)(11)	
Sweet vernalgrass—Anthoxanthum odoratum.	P	20–30	6	14	Light	
Sweetvetchm northern—Hedysarum boreale.	B,TB,T	15–25; 20	14	[1]28		
Switchgrass—Panicum virgatum.	P,TS	15–30	7	14	Light; KNO_3	Prechill at 5° C for 2 weeks; see §201.57a.
Timothy—Phleum pratense.	P,TB	15–25; 20–30	5	10	Light; see ¶ (a)(9)	KNO_3 and prechill at 5° or 10° C for 5 days.
Timothy, turf—Phleum bertolonii.	P,TB	15–25; 20–30	5	10	Light	KNO_3 and prechill at 5° or 10° C for 5 days.
Tabacco—Nicotiana tabacum.	P,TB	20–30	7	14	Light	
Trefoil:						
Big—Lotus ulginosus	B,T	20	5	[1]12		
Birdsfoot—Lotus corniculatus.	B,P,T	20	5	[1]12		
Triticale—x Triticosecale	B,T,S	20; 15	4	7		Prechill at 5° or 10° C for 5 days, or predry.
Vaseygrass—Paspalum urvillei.	P	20–35	7	21	Light	KNO_3.
Veldtgrass—Ehrharta calycina.	P	10–30	7	28	Light	See §201.571.
Velvetbean—Mucuna pruriens var. utilis.	B,T,S,C	20–30	3	[1]14		
Veltvetgrass—Holcus lanatus.	P	20–30	6	14	Light	
Vetch:						
Common—Vicia sativa subsp. sativa.	B,T	20	5	[1]10		
Hairy—Vicia villosa subsp. villosa.	B,T	20	5	[1]14		
Hungarian—Vicia pannonica.	B,T	20	5	[1]10		
Monantha—Vicia articulata.	B,T	20	5	[1]10		
Narrowleaf—Vicia sativa subsp. nigra.	B,T	20	5	[1]14		

TABLE 2.—GERMINATION REQUIREMENTS FOR INDICATED KINDS—Continued

Name of seed	Substrata	Temperature (°C)	First count days	Final count days	Additional directions	
					Specific requirements	Fresh and dormant seed
Purple—Vicia benghalensis.	B,T	20	5	110		
Woollypod—Vicia villosa subsp. varia.	B,T	20	5	114	.....	Prechill at 10° C for 5 days, test at 15° C.
Wheat:						
Common—Triticum aestivum.	B,T,S	20; 15	4	7	.....	Prechill at 5° or 10° C for 5 days, or predry.
Club—Triticum compactum.	B,T,S	20; 15	4	7	.....	Prechill at 5° or 10° C for 5 days, or predry.
Durum—Triticum durum.	B,T,S	20; 15	4	10	.....	Prechill at 5° or 10° C for 5 days, or predry.
Polish—Triticum polonicum.	B,T,S	20; 15	4	7	.....	Prechill at 5° or 10° C for 5 days, or predry.
Poulard—Triticum turgidum.	B,T,S	20; 15	4	7	.....	Prechill at 5° or 10° C for 5 days, or predry.
Wheat x Agrotricum—Triticum x Agrotriticum.	B,T,S	20; 15	4	7	.....	Prechill at 5° or 10° C for 5 days, or predry.
Wheatgrass:						
Beardless—Elytrigia spicata.	P,TB	15–25	7	14	Light and KNO_3 optional.	KNO_3 and prechill at 5° or 10° C for 7 days.
Fairway crested—Agropyron cristatum.	P,TB	15–25; 20–30	5	14	Light and KNO_3 optional.	KNO_3 and prechill at 5° or 10° C for 7 days.
Standard crested—Agropyron desertorum.	P,TB	15–25; 20–30	5	14	Light and KNO_3 optional.	KNO_3 and prechill at 5° or 10° C for 7 days.
Intermediate—Elytrigia intermedia subsp. intermedia.	P	15–25	5	28	Light and KNO_3 optional.	KNO_3 and prechill at 5° or 10° C for 7 days.
Alternate method.	P	20–30	5	28	Light	
Pubescent—Elytrigia intermedia subsp. barbulata.	P	15–25	5	28	Light and KNO_3 optional.	KNO_3 and prechill at 5° or 10° C for 7 days.
Alternate method.	P	20–30	5	28	Light	
Siberian—Agropyron fragile subsp. sibiricum.	P,TB	15–25;	7	14	Light and KNO_3 optional.	KNO_3 and prechill at 5° or 10° C for 7 days.
Slender—Elymus trachycaulus.	P,TB	15–25; 10–30	5	14	Light and KNO_3 optional.	Prechill at 5° or 10° C for 5 days; if still dormant on the 10th day, rechill 2 days, then place at 20–30° C for 4 days.
Streambank—Elytrigia dasystachya.	P	15–25	5	14	Light and KNO_3 optional.	Prechill at 5° or 10° C for 5 days.
Tall Elytrigia dasystachya.	P	15–25	5	21	Light and KNO_3 optional.	Prechill at 5° or 10° C for 5 days.
Alternate method.	P	20–30	5	21	Light	Prechill at 5° or 10° C for 5 days.
Western—Elymus smithii.	B,P,T	15–30	7	28	Dark	KNO_3 or soil; see §201.57a.
Wildrye:						
Basin—Leymus cinereus.	P	15–25	10	21	.....	See §201.57a.
Canada—Elymus canadensis.	P	15–30	7	21	Light	Prechill at 5° C for 2 weeks.
Russian—Psathrostachys juncea.	P	20–30	5	14	Light	Prechill at 5° or 10° C for 5 days.
Vegetable Seed						
Artichoke—Cynara scolymus.	B,T	20–30	7	21		
Asparagus—Asparagus officinalis.	B,T,S	20–30	7	21		
Asparagusbean—Vigna unguiculata subsp. sesquipedalis.	B,T,S	20–30	5	18		

TABLE 2.—GERMINATION REQUIREMENTS FOR INDICATED KINDS—Continued

Name of seed	Substrata	Temperature (°C)	First count days	Final count days	Additional directions	
					Specific requirements	Fresh and dormant seed
Bean:						
Garden—Phaseolus vulgaris.	B,T,S,TC	20–30; 25	None	[1]8	.....	See ¶ (b)(12).
Lima—Phaseolus lunatus.	B,T,C,S	20–30	5	[1]		
Runner—Phaseolus coccineus.	B,T,S	20–30	5	[1]9		
Beet—Beta vulgaris subsp. vulgaris.	B,T,S	20–30	3	14	See ¶ (b)(3)	
Broadbean—Vicia faba ...	S,C	20	4	[1]14	See ¶ (b)(11)	Prechill at 10° C for 3 days.
Broccoli—Brassica oleracea var. botrytis.	B,P,T	20–30	3	10	.....	Prechill at 5° or 10° C for 3 days; KNO_3 and light.
Brussels sprouts—Brassica oleracea var. gemmifera.	B,P,T	20–30	3	10	.....	Prechill at 5° or 10° C for 3 days; KNO_3 and light.
Burdock, great—Arctium lappa.	B,T	20–30	7	14		
Cabbage—Brassica oleracea var. capitata.	B,P,T	20–30	3	10	Prechill at 5° or 10° C for 3 days; KNO_3 and light..	
Cabbage, Chinese—Brassica pekinensis.	B,T	20–30	3	7		
Cabbage, tronchuda—Brassica oleracea var. costata.	B,P	20–30	3	10	.....	Prechill at 5° or 10° C for 3 days, KNO_3 and light.
Cardoon—Cynara cardunculus.	B,T	20–30	7	21		
Carrot—Daucus carota var. sativus.	B,T	20–30	6	14		
Cauliflower—Brassica oleracea var. botrytis.	B,P,T	20–30	3	10	.....	Prechill at 5° or 10° C for 3 days; KNO_3 and light.
Celeriac—Apium graveolens var. rapaceum.	P	15–25; 20	10	21	Light; see ¶ (a)(9)	
Celery—Apium graveolens var. dulce.	P	15–25; 20	10	21	Light; see ¶ (a)(9)	
Chard, Swiss—Beta vulgaris subsp. cicla.	B,T,S	20–30	3	14	See ¶ (b)(3)	
Chicory—Cichorium intybus.	P,TS	20–30	5	14	Light; KNO_3 or soil; see ¶ (a)(9).	
Chives—Allium schoenoprasum.	B,T	20	6	14		
Citron—Citrullus lanatus var. citroides.	B,T	20–30	7	14	Soak seeds 6 hrs	Test at 30° C.
Collards—Brassica olercea var. acephala.	B,P,T	20–30	3	10	.....	Prechill at 5° or 10° C for 3 days KNO_3 and light.
Corn, sweet—Zea mays .	B,T,S,TC	20–30; 25	4	7		
Cornsalad—Valerianella locusta.	B,T	15	7	28	.....	Test at 10° C.
Cowpea—Vigna unguiculata subsp. unguiculata.	B,T,S	20–30	5	[1]8		
Cress:						
Garden—Lepidium sativum.	B,P,T	15	4	10	.....	Light.
Upland—Barbarea verna.	P,TB	20–35	4	7	Light; KNO_3	
Water—Nasturtium officinale.	P	20–30	4	14	.....	Light.
Cucumber—Cucumis sativus.	B,T,S	20–30	3	7	Keep substratum on dry side; see ¶ (a)(3).	
Dandelion—Taraxacum officinale.	P,TB	20–30	7	21	Light; see ¶ (a)(9)	
Dill—Anethum graveolens	B,T	20–30	7	21		
Eggplant—Solanum melongena.	P,TB,RB,T	20–30	7	14	.....	Light; KNO_3.
Endive—Cichorium endivia.	P,TS	20–30	5	14	Light; KNO_3 or soil ..	See ¶ (b)(6).

TABLE 2.—GERMINATION REQUIREMENTS FOR INDICATED KINDS—Continued

Name of seed	Substrata	Temperature (°C)	First count days	Final count days	Additional directions	
					Specific requirements	Fresh and dormant seed
Gherkin, West India—Cucumis anguria.	B,T,S	20–30	3	7	.....	Test at 30° C.
Kale—Brassica oleracea var. acephala.	B,P,T	20–30	3	10	.....	Prechill at 5° or 10° C for 3 days; KNO_3 and light.
Kale, Chinese—Brassica oleracea var. alboglabra.	B,P,T	20–30	3	10	.....	Prechill at 5° or 10° C for 3 days; KNO_3 and light.
Kale, Siberian—Brassica napus var. pabularia.	B,P,T	20–30; 20	3	7		
Kohlrabi—Brassica oleracea var. gongylodes.	B,P,T	20–30	3	10	.....	Prechill at 5° or 10° C for 3 days; KNO_3 and light.
Leek—Allium porrum	B,T	20	6	14		
Lettuce—Lactuca sativa ..	P	20	None	7	Light	Prechill at 10° C for 3 days or test at 15° C.
Melon—Cucumis melo	B,T,S	20–30	4	10	Keep substratum on dry side; see ¶ (a)(3).	
Mustard, India—Brassica juncea.	P	20–30	3	7	Light	Prechill at 10° C for 7 days and test for 5 additional days; KNO_3.
Mustard, spinach—Brassica pervirdis.	B,T	20–30	3	7		
Okra—Abelmoschus esulentus.	B,T	20–30	4	114		
Onion—Allium cepa	B,T	20	6	10		
Alternate method	S	20	6	12		
Onion, Welsh—Allium fistulosum.	B,T	20	6	10		
Pak-choi—Brassica chinensis.	B,T	20–30	3	7		
Parsley—Petroselinum crispum.	B,T,TS	20–30	11	28		
Parsnip—Pastinaca sativa.	B,T,TS	20–30	6	28		
Pea—Pisum sativum	B,T,S	20	5	18		
Pepper—Capsicum spp. .	TB,RB,T	20–30	6	14	.....	Light and KNO_3.
Pumpkin—Cucurbita maxima, C. moschata, and C. pepo.	B,T,S	20–30	4	7	Keep substratum on dry side; see ¶ (a)(3).	
Radish—Raphanus sativus.	B,T	20	4	6		
Rhubarb—Rheum rhabarbarum.	TB,TS	20–30	7	21	Light	
Rutabaga—Brassica napus var. napobrassica.	B,T	20–30	3	14		
Sage—Salvia officnalis ...	B,T,S	20–30	5	14		
Salsify—Tragopogon porrifolius.	B,T	15	5	10	.....	Prechill at 10° C for 3 days.
Savory, summer—Satureja hortensis.	B,T	20–30	5	21		
Sorel—Rumex acetosa ...	P,TB,TS	20–30	3	14	Light	Test at 15° C.
Soybean—Glycine max ..	B,T,S,TC	20–30; 25	5	18		
Spinach—Spinacia oleracea.	TB,T	15; 10	7	21	Keep substratum on dry side; see ¶ (a)(3).	
Spinach, New Zealand—Tetragonia tetragoniodes.	T	15; 20	5	21	Soak fruits overnight (16 hrs), air dry 7 hrs; plant in very wet towels; do not rewater unless later counts exhibit drying out.	On 21st day scrape fruits and test for 7 additional days.
Alternate method	B,T	15	5	21	Remove pulp from basal end of fruit.	
Squash—Cucurbita moschata, C. maxima, and C. pepo.	B,T,S	20–30	4	7	Keep substratum on dry side; see ¶ (a)(3).	

TABLE 2.—GERMINATION REQUIREMENTS FOR INDICATED KINDS—Continued

Name of seed	Substrata	Temperature (°C)	First count days	Final count days	Additional directions	
					Specific requirements	Fresh and dormant seed
Tomato—Lycopersicon esculentum.	B,P,RB,T	20–30	5	14	.....	Light; KNO_3.
Tomato, husk—Physalis pubsecens.	P,TB	20–30	7	28	Light; KNO_3	
Turnip—Brassica rapa	B,T	20–30	3	7		
Watermelon—Citrullus lanatus var. lanatus.	B,T,S	20–30; 25	4	14	Keep substratum on dry side; see ¶ (a)(3).	Test at 30° C.

[1] Hard seeds may be present. (See § 201.57)
[2] Rhizomatous derivatives of a johnsongrass x sorghum cross or a johnsongrass x sudangrass cross.

33. Section 201.58a is revised to read as follows:

§ 201.58a Indistinguishable seeds.

When the identification of the kind, variety, or type of seed or determination that seed is hybrid is not possible by seed characteristics, identification may be based upon the seedling, growing plant or mature plant characteristics according to such authentic information as is available.

(a) *Ryegrass.* In determining the pure seed percentage of perennial ryegrass and annual ryegrass, 400 seeds shall be grown on white filter paper and the number of fluorescent seedlings determined under ultraviolet light at the end of the germination period (see § 201.58(b)(10)).

(1) Fluorescence results are to be determined as test fluorescence level (TFL) to two decimal places as follows:

$$\frac{\text{Number of normal fluorescent seedlings}}{\text{Total number of normal seedlings}} \times 100 = \% \text{ TFL}$$

(2) The percentage of perennial ryegrass is calculated as follows:

$$\% \text{ Perennial ryegrass} = \frac{\% \text{ VFL (annual)} - \% \text{ TFL}}{\% \text{ VFL (annual)} - \% \text{ VFL (perennial)}} \times \% \text{ Pure ryegrass}$$

where VFL = Variety fluorescence level.

(3) Using the above formula, the percentage of annual ryegrass is calculated as follows:

% Annual Ryegrass = % Pure Ryegrass − % Perennial Ryegrass

(4) If the test fluorescence level (TFL) of a perennial ryegrass is equal to or less than the variety fluorescence level (VFL) described for the variety, all pure ryegrass is considered to be perennial ryegrass and the formula is not applied.

(5) If the test fluorescence level (TFL) of an annual ryegrass is equal to or greater than the variety fluorescence level (VFL) described for the variety, all pure ryegrass is considered to be annual ryegrass and the formula is not applied.

(6) A list of variety fluorescence level (VFL) descriptions for perennial ryegrass varieties which are more than 0 percent fluorescent and annual ryegrass varieties which are less than 100 percent fluorescent is maintained and published by the National Grass Variety Review Board of the Association of Official Seed Certifying Agencies (AOSCA). If the variety being tested is not stated or the fluorescence level has not been described, the fluorescence level shall be considered to be 0 percent for perennial ryegrass and 100 percent for annual ryegrass. Both VFL (annual) and VFL (perennial) values must always be entered in the formula. If a perennial ryegrass variety is being tested, the VFL (annual) value is 100 percent. If an annual ryegrass variety is being tested, the VFL (perennial) value is 0 percent. For blends the fluorescence level shall be interpolated according to the portion of each variety claimed to be present.

(b) *Sweetclover.* In determining admixtures of yellow sweetclover and white sweetclover, at least 400 seeds shall be subjected to the chemical test as follows:

(1) Preparation of test solution: Add 3 grams of cupric sulfate ($CuSO_4$) to 30 mL of household ammonia (NH_4OH, approximately 4.8 percent) in a stoppered bottle to form tetraamminecopper sulfate ($[Cu(NH_3)_4]SO_4$) solution used for this test. After mixing, a light blue precipitate of cupric hydroxide ($Cu(OH)_2$) should form. If no precipitate forms, add additional $CuSO_4$ until a precipitate appears. Since the strength of household ammonia can vary, formation of a precipitate indicates that a complete reaction has taken place between $CuSO_4$ and NH_4OH; otherwise fumes from excess ammonium hydroxide may cause eye irritation.

(2) Preparation of seeds: To insure imbibition, scratch, prick, or otherwise scarify the seed coats of the sweetclover seeds being tested. Soak seeds in water for 2 to 5 hours in a glass container.

(3) Chemical reaction: When seeds have imbibed, remove excess water and add enough test solution to cover the seeds. Seed coats of yellow sweetclover will begin to stain dark brown to black; seed coats of white sweetclover will be olive or yellow-green. Make the separation within 20 minutes, since the seed coats of white sweetclover will eventually turn black also.

(4) Calculation of results: Count the number of seeds which stain dark brown or black and divide by the total number of seeds tested; multiply by the pure seed percentage for Melilotus spp.; the result is the percentage of yellow sweetclover in the sample. The percentage of white sweetclover is found by subtracting the percentage of yellow sweetclover from the percentage of Melilotus spp. pure seed.

(c) *Wheat.* From the pure seed sample count four replicates of 100 seeds each. Soak the seed in distilled water for 16 hours; then flush with tap water and remove the excess water from the surface of the seeds. Place two layers of filter paper in a container and moisten with a 1 percent phenol (C_6H_5OH) solution. Place the seed, palea side down, on the two layers of filter paper and cover the container. A preliminary observation may be made at 2 hours. At

4 hours, record the number of seeds in each of the following color categories:

(1) Ivory.
(2) Fawn.
(3) Light Brown.
(4) Brown.
(5) Brown Black.

(d) *Soybean.* In determining the varietal purity, the peroxidase test may be used. Remove and place the dry seed coat from seeds into individual test tubes or suitable containers. Add 10 drops (0.5–1.0 mL) of 0.5 percent guaiacol ($C_7H_8O_2$) to each test tube. After waiting 10 minutes add one drop (about 0.1 mL) of 0.1 percent hydrogen peroxide (H_2O_2). One minute after adding hydrogen peroxide, record the seed coat as peroxidase positive (high peroxidase activity) indicated by a reddish-brown solution or peroxidase negative (low peroxidase activity) indicated by a colorless solution in the test tube. Various sample sizes may be used for this test. Test results shall include the sample size tested.

(e) *Oat.* In determining the varietal purity, the fluorescence test may be used. Place at least 400 seeds on a black background under a F15T8–BLB or comparable ultraviolet tube(s) in an area where light from other sources is excluded. Seeds are considered fluorescent if the lemma or palea fluoresce or appear light in color. "Partially fluorescent" seeds shall be considered fluorescent. Seeds are considered nonfluorescent if the lemma and palea do not fluoresce and appear dark in color under the ultraviolet light.

34. A new § 201.58d is added to read as follows:

§ 201.58d Fungal endophyte test.

A fungal endophyte test may be used to determine the amount of fungal endophyte (Acremonium spp.) in certain grasses.

(a) Method of preparation of aniline blue stain for use in testing grass seed and plant material for the presence of fungal endophyte:

(1) Prepare a 1 percent aqueous aniline blue solution by dissolving 1 gram aniline blue in 100 mL distilled water.

(2) Prepare the endophyte staining solution of one part of 1 percent aniline blue solution with 2 parts of 85 percent lactic acid ($C_3H_6O_3$).

(3) Use stain as-is or dilute with water if staining is too dark.

(b) Procedure for determining levels of fungal endophyte in grass seed:

(1) Take a sub-sample of seed (1 gram is sufficient) from the pure seed portion of the kind under consideration.

(2) Digest seed at room temperature for 12–16 hours in a 5 percent sodium hydroxide (NaOH) solution or other temperature/time combination resulting in adequate seed softening.

(3) Rinse thoroughly in running tap water.

(4) De-glume seeds and place on a microscope slide in a drop of endophyte staining solution. Slightly crush the seeds. Use caution to prevent carryover hyphae of fungal endophyte from one seed to another.

(5) Place coverglass on seed and apply gentle pressure.

(6) Examine with compound microscope at 100–400× magnification, scoring a seed as positive if any identifiable hyphae are present.

(7) Various sample sizes may be used for this test. Precision changes with sample size; therefore, the test results must include the sample size tested.

(c) Procedure for determining levels of fungal endophyte in seedlings from seed samples suspected to contain fungal endophyte:

(1) Select seeds at random and germinate.

(2) Examine seedlings from the sample germinated after growing for a minimum of 48 days.

(3) Remove the outermost sheath from the seedling. Tissue should have no obvious discoloration from saprophytes and should have as little chlorophyll as possible.

(4) Isolate a longitudinal section of leaf sheath approximately 3–5 mm in width.

(5) Place the section on a microscope slide with the epidermis side down.

(6) Stain immediately with the endophyte staining solution as prepared in paragraph (a)(2) and (3) of this section. Allow dye to remain at least 15 seconds but no more than one minute.

(7) Blot off the excess dye with tissue paper. Sections should remain on the slide, but may adhere to the tissue paper; if so, remove and place in proper position on the slide.

(8) Place a coverglass on the sections and flood with water.

(9) Proceed with evaluation as described in paragraph (b) (6) and (7) of this section.

35. In § 201.60, paragraphs (a)(1) and (c) are revised to read as follows:

§ 201.60 Purity percentages.

(a)(1) The tolerance for a given percentage of the purity components is the same whether for pure seed, other crop seed, weed seed, or inert matter. Wider tolerances are provided when 33 percent or more of the sample is composed of seed plus empty florets and/or empty spikelets of the following chaffy kinds: Wheatgrasses (Agropyron spp.); bentgrasses and redtop (Agrostis spp.); meadow foxtail (Alopecurus pratensis); bluestems (Andropogon spp.); sweet vernalgrass (Anthoxanthum odoratum); tall oatgrass (Arrhenatherum elatius); carpetgrass (Axonopus affinis); yellow bluestem (Bothriochloa ischaemum); gramas (Bouteloua spp.); bromes, rescuegrass, and soft chess (Bromus spp.); buffalograss (Buchloe dactyloides); buffelgrass (Cenchrus ciliaris); rhodesgrass (Chloris gayana); bermudagrass and giant bermudagrass (Cynodon spp.); orchardgrass (Dactylis glomerata); veldtgrass (Ehrharta calycina); bottlebrush-squirreltail, Canada wildrye, and wheatgrasses (Elymus spp.); wheatgrasses (Elytrigia spp.); fescues (Festuca spp.); galletagrass (Hilaria jamesii); basin wildrye (Leymus cinereus); ryegrasses (Lolium spp.); molassesgrass (Melinis minutiflora); Indian ricegrass (Oryzopsis hymenoides); guineagrass (Panicum maximum var. maximum); dallisgrass (Paspalum dilatatum); vaseygrass (Paspalum urvillei); bluegrasses (Poa spp.); Russian wildrye (Psathyrostachys juncea); little bluestem (Schizachyrium scoparium); and yellow indiangrass (Sorghastrum nutans). The wider tolerances do not apply to seed devoid of hulls.

* * * * *

(c) Tolerances calculated by the following formula shall be used for either chaffy or nonchaffy mixtures when the average particle-weight ratio is 1.5:1 to 20:1 and beyond:

$$T=A-100R[(100A/R)/(B+A/R)-T_1]/[(100B)/(B+A/R)+T_1]+R[(100A/R)/(B+A/R)-T_1]$$

The symbols used in the formula are as follows:

T = tolerance being calculated.
A = percent which the weight of the component with the heavier average particle-weight is of the weight of both components.
B = percent which the weight of the component with the lighter average particle-weight is of the weight of both components.
H = average particle-weight for the component with the heavier average particle-weight.
L = average particle-weight for the component with the lighter average particle-weight.
R = ratio of the average particle-weight for the component with the heavier average particle-weight to the average particle-weight for the component with the lighter average particle-weight. R=H/L.
T_1 = regular tolerance for the kind of seed (chaffy or nonchaffy) and for (100B)/(B+A/R).

In determining the values for A and B in the formula, the sample shall be regarded as composed of two parts:

(1) The kind, type, or variety under consideration, and

(2) All other components. Values for H and L shall be obtained from the last column of Table 1, § 201.46, or by laboratory tests for inert matter, weed seeds, or crop seeds where such values are not obtainable from Table 1. In computing tolerances for nonchaffy kinds the values for T_1 are taken from column C of Table 3, and for chaffy kinds the values for T_1 are taken from column D of Table 3.

§ 201.61 [Amended]

36. Section 201.61 is amended by removing "2.4" following the number "3" in the first table and adding "2.8" in its place and removing "2.8" following the number "2" and adding "2.4" in its place.

§ 201.62 [Amended]

37. In § 201.62, Table 4 is amended by removing in the "100" column "4.0" and adding "4.6" in its place.

38. Section 201.76 and Table 5 are revised to read as follows:

§ 201.76 Minimum land, isolation, field, and seed standards.

In the following Table 5 the figures in the "Land" column indicate the number of years that must elapse between the destruction of a stand of a kind and establishment of a stand of a specified class of a variety of the same kind. A certification agency may grant a variance in the land cropping history in specific circumstances where cultural practices have been proven adequate to maintain genetic purity. The figures in "Isolation" column indicate the distance in feet from any contamination source. The figures in the "Field" column indicate the minimum number of plants or heads in which one plant or head of another variety is permitted. The figure in the "Seed" column indicate the maximum percentage of seed of other varieties of off-types permitted in the cleaned seed.

TABLE 5

Crop	Foundation			Registered					Certified	
	Land	Isolation	Field	Seed	Land	Isolation	Field	Seed	Land	Isolation	Field Seed
Alfalfa:											
Nonhybrid	1 4	44 48 600 (59 182.88m)	1,000	0.1	1 3	3 44 48 300 (59 91.44m)	400	0.25	1 2 1	44 49 165 (59 50.29m)	1001.0
Hybrid	1 4	43 1,320 (59 402.34m)	42 1,000	0.1	.....	.....	.....	.....	1 2 1	3 43 44 165 (59 50.29m)	42 1001.0
Barley:											
Nonhybrid	7 1	23 0	3,000	0.05	7 1	23 0	2,000	0.1	7 1	23 0	1,0000.2
Hybrid	30 1	21 32 660 (59 201.17m)	3,000	0.05	30 1	21 32 660 (59 201.17m)	2,000	0.1	30 1	21 32 330 (59 100.59m)	1,000 55 0.2
Hybrid (chemically assisted)	.....	.....	.....	.....	.....	.....	.....	.....	57 0	52 53 330 (59 100.59m)	54 1,0000.2
Bean:											
Field and garden	7 1	23 0	2,000	0.05	7 1	23 0	1,000	0.1	7 1	23 0	5,000.2
Mung	7 1	23 0	1,000	0.1	7 1	230	500	0.2	7 1	23 0	2,000.5
Broadbean	7 1	23 0	2,000	0.05	7 1	23 0	1,000	0.1	7 1	23 0	5,000.2
Buckwheat	7 1	660 (59 201.17m)	3,000	0.05	7 1	660 (59 201.17m)	2,000	0.1	7 1	660 (59 201.17m)	1,0000.2
Clover all kinds	19 5	5 18 44 600 (59 182.88m)	1,000	0.1	19 3	5 18 44 300 (59 91.44m)	400	0.25	19 2	18 44 165 (59 50.29)	1001.0
Corn:											
Backcross	0	10 11 660 (59 201.17m)	13 46 1,000	15 0.1							
Inbred	0	10 11 660 (59 201.17m)	13 46 1,000	15 0.1							
Foundation single cross	0	10 11 660 (59 201.17m)	13 46 1,000	15 0.1							
Hybrid	.....	.....	.....	.....	.....	.....	.....	.....	0	11 12 660 (59 201.17m)	1,0000.5
Open-pollinated	.....	.....	.....	.....	.....	.....	.....	.....	0	11 12 660 (59 201.17m)	2000.5
Sweet	.....	.....	.....	.....	.....	.....	.....	.....	0	11 14 660 (59 201.17m)	0.5
Cotton	0	19 0	10,000	0.03	0	19 0	5,000	0.05	0	19 0	1,0000.1
Cowpea	7 1	23 0	2,000	0.1	7 1	23 0	1,000	0.2	7 1	23 0	5000.5
Crambe	7 1	660 (59 201.17m)	2,000	0.05	7 1	24 660 (59 201.17m)	1,000	0.1	7 1	24 660 (59 201.17m)	5000.25
Crownvetch	1 5	5 44 600 (59 182.88m)	1,000	0.1	1 3	5 44 300 (59 91.44m)	400	0.25	1 2	6 44 165 (59 50.29)	1001.0
Flatpea	1 4	5 44 600 (59 182.88m)	1,000	0.1	1 3	3 5 44 300 (59 91.44m)	400	0.25	1 2 1	3 44 165 (59 50.29m)	1001.0
Flax	7 1	23 0	5,000	0.05	7 1	23 0	2,000	0.1	7 1	23 0	1,0000.2
Grasses:											

TABLE 5—Continued

Crop	Foundation			Registered						Certified	
	Land	Isolation	Field	Seed	Land	Isolation	Field	Seed	Land	Isolation	Field Seed
Cross-pollinated	57 5	4 18 20 900 (59 274.32m)	1,000	0.1	8 57 1	4 18 20 300 (59 91.44m)	100	1.0	8 57 1	4 18 20 58 165 (59 50.29m)	50 47 50 2.0
Strains at least 80 percent apomictic and highly self-fertile species	57 5	4 18 20 60 (59 18.29m)	1,000	0.1	8 57 1	4 18 20 30 (59 9.14m)	100	1.0	8 57 1	4 18 20 58 15 (59 4.57m)	50 16 2.0
Lespedeza	1 5	4 10 (59 3.05m)	1,000	0.1	1 3	4 10 (59 3.05m)	400	0.25	1 2	4 10 (59 3.05m)	100 1.0
Millet:											
Cross-pollinated	81	40 1,320 (59 402.34m)	27 20,000	0.005	81	40 1,320 (59 402.34m)	27 10,000	0.01	81	40 660 (59 201.71m)	27 5,0000.02
Self-pollinated	81	23 0	3,000	0.05	81	23 0	2,000	0.1	81	23 0	1,0000.2
Mustard	4	1,320 (59 402.34m)	2,000	0.05	.....	.....	.....	.....	2	24 660 (59 201.17m)	5000.25
Oat	71	23 0	3,000	0.2	71	23 0	2,000	0.3	71	23 0	1,0000.5
Okra	71	1,320 (59 251.46m)	27 0	0.0	71	1,320 (59 402.34m)	27 2,500	0.5	71	825 (59 402.34m)	27 1,2501.0
Onion	71	5,280 (59 1,609.36m)	22 200	0.0	71	2,640 (59 804.66m)	22 200	22 0.5	71	1,320 (59 402.34m)	22 200 221.0
Pea, field	71	23 0	2,000	0.05	71	23 0	1,000	0.1	71	23 0	5000.2
Peanut	71	23 0	1,000	0.1	71	23 0	500	0.2	71	23 0	2000.5
Pepper	71	25 200 (59 60.96m)	0	0.0	71	25 100 (59 30.48m)	300	0.5	71	25 30 (59 9.14m)	1501.0
Rape:											
Cross-pollinated	4	24 1,320 (59 402.34m)	2,000	0.05	.....	.....	.....	.....	2	24 330 (59 100.59m)	5000.25
Self-pollinated	4	24 660 (59 201.17m)	2,000	0.05	.....	.....	.....	.....	2	24 330 (59 100.59m)	5000.25
Rice	71	39 10 (59 3.05m)	10,000	0.05	71	39 10 (59 3.05m)	5,000	0.1	71	39 10 (59 3.05m)	1,0000.2
Rye	71	18 660 (59 201.17m)	3,000	0.05	71	18 660 (59 201.17m)	2,000	0.1	71	18 660 (59 201.17m)	1,0000.2
Safflower	72	1,320 (59 402.34m)	10,000	0.01	72	1,320 (59 402.34m)	2,000	0.05	72	1,320 (59 402.34m)	1,0000.1
Sainfoin	1 5	5 44 600 (59 182.88m)	1,000	0.1	1 3	5 44 300 (59 91.44m)	400	0.25	1 2	6 44 165 (59 50.29m)	100 1.0
Sorghum:											
Non- hybrid	71	990 (59 201.76m)	27 50,000	0.005	71	990 (59 301.76m)	27 35,000	0.01	71	29 660 (59 201.17m)	27 20,0000.05
Hybrid seedstock	71	990 (59 301.76m)	27 50,000	0.005	.....	.....	.....	.....	.....	.....	.....
Commercial hybrid	.....	.....	.....	.....	.....	.....	.....	71	21 29 31 660	27 20,0000.1 (59 201.17m)	
Soybean	33 1	23 0	1,000	0.1	33 1	23 0	500	0.2	33 1	23 0	2000.5
Sunflower:											
Nonhybrid	1	41 45 2,640 (59 804.66m)	200	0.02	1	41 45 2,640 (59 804.66m)	200	0.02	1	41 45 2,640	200 34 0.1
Hybrid	1	41 45 2,640 (59 804.66m)	35 250	56 0.02	.....	.....	.....	.....	1	41 45 2,640 (59 804.66m)	35 250 34 56 0.1
Tomato	71	25 200 (59 60.96m)	0	0	71	25 100 (59 30.48m)	300	0.5	71	25 30 (59 9.14m)	1501.0
Tobacco:											
Nonhybrid	36 0	37 150 (59 45.72m)	0	0.01	36 0	37 150 (59 45.72m)	0	0.01	36 0	37 150 (59 45.72m)	00.01
Hybrid	.....	.....	.....	.....	.....	.....	.....	.....	36 0	38 150 (59 45.72m)	00.01
Trefoil, birdsfoot	1 5	5,44 600 59 182.88m)	1,000	0.1	1 3	5,44 300 59 91.44m)	400	0.25	1 2	6,44 165 (59 50.29m)	100 1.0
Triticale	71	23 0	3,000	0.05	71	23 0	2,000	0.1	71	23 0	10,000.2
Vetch	1 7 5	17 44 10 (59 3.05m)	1,000	0.1	1 7 3	17 44 10 (59 3.05m)	400	0.25	1 7 2	17 44 10 (59 3.05m)	1001.0

TABLE 5—Continued

Crop	Foundation			Registered					Certified	
	Land	Isolation	Field	Seed	Land	Isolation	Field	Seed	Land	Isolation	Field Seed
Vetch, milk	[1] 5	[5,44] 600 ([59] 182.88m)	2,000	0.05	[1] 3	[5,44] 300 ([59] 91.44m)	1,000	0.1	[1] 2	[44] 165 ([59] 50.29m)	2000.5
Watermelon	[7] 1	[26] 2,640 ([59] 804.66m)	[28] 0	0	[7] 1	[26] 2,640 ([59] 402.34m)	[28] 0	0.5	[7] 1	[26] 1,320	[28] 5001.0
Wheat:											
Nonhybrid	[7] 1	[23] 0	3,000	0.05	[7] 1	[23] 0	2,000	0.1	[7] 1	[23] 0	10,000.2
Hybrid	[30] 1	[21,32] 660 ([59] 201.17m)	3,000	0.05	[30] 1	[21,32] 660 ([59] 201.17m)	2,000	0.1	[30] 1	[21,32] 330 ([59] 100.59m)	10,000.2
Hybrid (Chemically assisted)	.....	.....	.....	.....	.....	.....	.....	.....	[51] 0	[52,53] 330 ([59] 100.58m)	[54] 1,000 [55] 0.2

[1] The land must be free of volunteer plants of the crop kind during the year immediately prior to establishment and no manure or other contaminating material shall be applied the year previous to seeding or during the establishment and productive life of the stand.

[2] At least 2 years must elapse between destruction of indistinguishable varieties or varieties of dissimilar adaptation and establishment of the stand for the production of the Certified class of seed.

[3] Isolation distance for certified seed production shall be at least 500 feet (152.07m) from varieties of dissimilar adaptation.

[4] Isolation between classes of the same variety may be reduced to 25 percent of the distance otherwise required.

[5] This distance applies when fields are 5 acres (2ha) or larger in area. For smaller fields, the distances are 900 feet (274.32m) and 450 feet (137.16m) for the Foundation and Registered classes, respectively.

[6] Fields of less than 5 acres (2ha) require 330 feet (100.59m).

[7] Requirement is waived if the previous crop was grown from certified seed of the same variety.

[8] Requirement is waived if the previous crop was of the same variety and of a certified class equal or superior to that of the crop seeded.

[9] Reseeding varieties of crimson clover may be allowed to volunteer back year after year on the same ground. If a new variety is being planted where another variety once grew, the field history requirements apply.

[10] No isolation is required for the production of hand-pollinated seed.

[11] When the contaminant is the same color and texture, the isolation distance may be modified by (1) adequate natural barriers or (2) differential maturity dates, provided there are no receptive silks in the seed parent at the time the contaminant is shedding pollen. In addition, dent sterile popcorn requires no isolation from dent corn.

[12] Where the contaminating source is corn of the same color and texture as that of the field inspected or white endosperm-corn optically sorted, the isolation distance is 410 feet (124.97m) and may be modified by the planting of pollen parent border rows according to the following table:

Minimum distance from contaminant	Minimum No. of border rows required	
	Field size, up to 20 acres (8ha)	Field size, 20 acres or more (8ha)
410 (124.97m)	0	0
370 (112.78m)	2 (0.8ha)	1 (0.4ha)
330 (100.59m)	4 (1.6ha)	2 (0.8ha)
290 (88.39m)	6 (2.4ha)	3 (1.2ha)
245 (74.68m)	8 (3.2ha)	4 (1.6ha)
205 (62.48m)	10 (4.0ha)	5 (2.0ha)
165 (50.29m)	12 (4.8ha)	6 (2.4ha)
125 (38.10m)	14 (5.6ha)	7 (2.8ha)
85 (25.91m)	16 (6.4ha)	8 (3.2ha)
0	Not Permitted	10 (4.0ha)

[13] Refers to off-type plants in the pollen parent that have shed pollen or to the off-type plants in the seed parent at the time of the last inspection.

[14] The required minimum isolation distance for sweet corn is 660 feet (201.17m) from the contaminating source, plus four border rows when the field to be inspected is 10 acres (4.0ha) or less in size. This distance may be decreased by 15 feet (4.57m) for each increment of 4 acres (1.6ha) in the size of the field to a maximum of 40 acres (16ha) and further decreased 40 feet (12.19m) for each additional border row to a maximum of 16 rows. These border rows are for pollen-shedding purposes only.

[15] Refers to off-type ears. Ears with off-colored or different textured kernels are limited to 0.5 percent, or a total of 25 off-colored or different textured kernels per 1,000 ears.

[16] The Merion variety of Kentucky bluegrass is allowed 3 percent.

[17] All cross-pollinating varieties must be 400 feet (121.92m) from any contaminating source.

[18] Isolation between diploids and tetraploids shall be at least 15 feet (4.57m).

[19] Minimum isolation shall be at least 100 feet (30.48m) if the cotton plants in the contaminating source differ by easily observable morphological characteristics from the field to be inspected. Isolation distance between upland and Egyptian types shall be at least 1,320 feet (402.34m), 1,320 feet (402.34m), and 660 feet (182.88m) for Foundation, Registered, and Certified classes, respectively.

[20] These distances apply when there is no border removal. Border removal applies only to fields of 5 acres (2ha) or more. Removal of a 9-foot (2.74m) border (after flowering) decreases the required distance for Foundation, Registered, and Certified seed classes to 600 feet (182.88m), 225 feet (68.58m), and 100 feet (30.48m), respectively, for cross-pollinated species, and to 30 feet (9.14m), 15 feet (4.57m), and 15 feet (4.57m), respectively, for apomictic and self-pollinated species. Removal of a 15 foot (4.57m) border (after flowering) allows a further decrease to 450 feet (136.16m), 150 feet (45.72m), and 75 feet (22.86m), respectively, for cross-pollinated species.

[21] Isolation distances between 2 fields of the same kind may be reduced to a distance adequate to prevent mechanical mixture, if the sum of percentages of plants in bloom in both fields does not exceed 5 percent at a time when more than 1 percent of the plants in either field are in bloom.

[22] Refers to bulbs.

[23] Distance adequate to prevent mechanical mixture is necessary.

[24] Required isolation between classes of the same variety is 10 feet (3.05m).

[25] The minimum distance may be reduced by 50 percent if different classes of the same variety are involved.

[26] The minimum distance may be reduced by 50 percent if the field is adequately protected by natural or artificial barriers.

[27] These ratios are for definite other varieties. The ratios for doubtful other varieties are:

	Foundation	Registered	Certified
Millet	1:10,000	1:5,000	1:2,500
Sorghum:			
Nonhybrid	1:20,000	1:10,000	1:1,000
Hybrid	1:20,000	Not Applicable	1:1,000
Okra	None	1:750	1:500

[28] Whiteheart fruits may not exceed 1 per 100, 40, and 20 for Foundation, Registered, and Certified classes, respectively. Citron or hard rind is not permitted in Foundation or Registered classes and may not exceed 1 per 1,000 fruits in the Certified class.

[29] This distance applies if the contaminating source does not genetically differ in height from the pollinator parent or has a different chromosome number. If the contaminating source does (genetically) differ and has the same chromosome number the distance shall be 990 feet (301.76m). The minimum isolation from grass sorghum or broomcorn with the same chromosome number shall be 1,320 feet (402.34m).

[30] Requirement is waived for the production of pollinator lines if the previous crop was grown from a certified class of seed of the same variety. Sterile lines and crossing blocks must be on land free of contaminating plants.

[31] If the contaminating source is similar to the hybrid in all important characteristics, the isolation may be reduced by 66 feet (20.12m) for each pair of border rows of the pollinator parent down to a minimum of 330 feet (100.59m). These rows must be located directly opposite or diagonally to the contaminating source. The pollinator border rows must be shedding pollen during the entire time 5 percent or more of the seed parent flowers are receptive.

[32] An unplanted strip at least 2 feet (0.61m) in width shall separate male sterile plants and pollinator plants in inter-planted blocks.

[33] Unless the preceding crop was another kind or unless the preceding soybean crop was planted with a class of certified seed of the same variety, or unless the preceding soybean crop and the variety being planted have an identifiable character difference, in which case, no time need elapse.

[34] May include not more than 0.04 percent purple or white seeds.

[35] Standards apply equally to seed parents and pollen parents which may include up to 1:1,000 plants each of the wild-type branching, purple, or white-seeded plants.

[36] A new plant bed must be used each year unless the bed is properly treated with a soil sterilant prior to seeding.

[37] This distance is applied between varieties of the same type and may be waived if four border rows of each variety are allowed to bloom and set seed between the two varieties but are not harvested for seed. Isolation between varieties of different types shall be 1,320 feet (402.34m) except if protected by bagging or by topping all plants in the contaminating source before bloom.

[38] When male sterile and male fertile plants of the same type are planted adjacent in a field, this requirement may be waived; provided, four border rows of male sterile plants are allowed to bloom and set seeds. The seed from these border rows shall not be harvested as part of the certified lot of seed produced by the male sterile plants. When plants are of different types, the distance shall be 1,320 feet (402.34m) except if protected by bagging or by topping all plants in the contaminating source before bloom.

[39] Isolation between varieties or non-certified fields of the same variety shall be 100 feet (30.48m) if aerial seeded and 50 feet (15.24m) if ground broadcast, and 10 feet (3.05m) if ground drilled.

[40] Isolation between millets of different genera shall be 6 feet (1.83m).

[41] Does not apply to Helianthus similes, H.ludens, or H.agrestis.

[42] The ratio of male sterile (A) strains and pollen (B or C) strains shall not exceed 2:1.

[43] Parent lines (A and B) in a crossing block, or seed and pollen lines in a hybrid seed production field, shall be separated by at least 6 feet (1.83m) and shall be managed and harvested in a manner to prevent mixing.

[44] Distance between fields of certified classes of the same variety may be reduced to 10 feet (3.05m) regardless of the class or size of the fields.

[45] An isolation distance of 5,280 feet (1609.36m) is required between oil and non-oil sunflower types and between either type and other volunteers or wild types.

[46] Detasseling, cutting, or pulling of the cytoplasmic male-sterile seed parent is permitted.

[47] All varieties of perennial ryegrass seed are allowed 3.0 percent.

[48] This distance applies for fields over 5 acres (2ha). For alfalfa fields of 5 acres (2ha) or less that produce the Foundation and Registered seek classes, the minimum distance from a different variety or a field of the same variety that does not meet the varietal purity requirements for certification shall be 900 feet (274.32m) and 450 feet (137.16m), respectively.

[49] There must be at least 10 feet (3.05m) or a distance adequate to prevent mechanical mixture between a field of another variety (or noncertified area within the same field) and the area being certified. The 165 feet (50.29m) isolation requirement is waived if the area of the "isolation zone" is less than 10 percent of the field eligible for the Certified class. The "isolation zone" is that area calculated by multiplying the length of the common border(s) with other varieties of alfalfa by the average width of the field (being certified) falling within the 165 feet (50.29m) isolation. Areas within the isolation zone nearest the contamination source shall not be certified.

[50] Seed of Critana thickspike wheatgrass (Elytrigia dasystachya) may contain up to 30 percent slender wheatgrass (Elymus trachycaulus) types.

[51] Crossing blocks must be planted on land free of volunteer contaminating plants.

[52] This distance applies to the seed parent when the contaminating source is wheat of another market class. If the contaminating source is the same market class as the seed rent, the distance may be modified by the planting of pollen parent border according to the following table:

Minimum distance from contaminant		Pollen (parent border)	
Feet	Meters	Feet	Meters
330	100.59	0	0
275	83.82	15	4.57
215	65.53	25	7.62
160	48.77	35	10.67
100	30.48	50	15.25

[53] Interplanted blocks of seed parent and pollinator shall be separated by an unplanted strip a minimum of one foot (0.31m) in width and be clearly identifiable.

[54] If Foundation or Registered the ratio shall be 1:3000 (Foundation) and 1:2000 (Registered).

[55] Does not include seed of the female parent.

[56] Pre-Control Test Standards

If field inspection shows one or more of the following, the applicant may request that seed certification be based on the results of a pre-certification grow-test approved by the certification agency;

a. inadequate insolation;

b. too few male parent plants shedding pollen when female plants are receptive;

c. excess off-types not to include wild types.

In such case, at lest 2,000 plants must be observed and meet the following standards before seed can be certified from fields with problems listed above.

Factor	Maximum permitted	
	Hybrid (percent)	Inbred (percent)
Sterile Plants	5.0	.....
Sterile or Fertile Plants	.....	5.0
Morphological Variants	0.5	0.5
Wild types	0.2	0.2
Total (including above types)	5.0	5.0

For non-oil types, seed which contains not more than 15 percent sterile plants may be certified. If it contains 85 percent-95 percent hybrid plants, the percentage of hybrid shall be shown on the certification label.

[57] Application to establish the pedigree must be made within one year of seeding. The crop will remain under supervision of the certifying agency as long as the field is eligible for certification.

[58] These distances apply when there is no border removal. Varieties that are 95 percent or more apomictic, as defined by the originating breeder, shall have the isolation distance reduced to a mechanical separation only. Varieties less than 95 percent apomictic and all other cross pollinating species that have an "isolation zone" of less than 10 percent of the entire field, no isolation is required. (Isolation zone is calculated by multiplying the length of the common border with other varieties of grass by the average width of the certified field falling within the isolation distance required.)

[59] Indicates metric equivalent in meters.

Dated: May 6, 1994.

Lon Hatamiya,

Administrator.

[FR Doc. 94–11492 Filed 5–16–94; 8:45 am]

BILLING CODE 3410–10–D

federal register

Tuesday
May 17, 1994

Part III

Department of Education

34 CFR Part 682
Federal Family Education Loan Program; Final Rule

DEPARTMENT OF EDUCATION

34 CFR Part 682

RIN 1840–AA96

Federal Family Education Loan Program

AGENCY: Department of Education.

ACTION: Final regulations.

SUMMARY: This document contains corrections and other technical changes to the final regulations for the Federal Family Education Loan Program which were published in the **Federal Register** on December 18, 1992 (57 FR 60280). The regulations govern the Federal Stafford Loan Program, the Federal Supplemental Loans for Students (Federal SLS) Program, the Federal PLUS Program and the Federal Consolidation Loan Program, collectively referred to as the Federal Family Education Loan Program.

EFFECTIVE DATE: These regulations take effect either 45 days after publication in the **Federal Register** or later if the Congress takes certain adjournments, with the exception of § 682.209. Section 682.209 will become effective after the information collection requirements contained in this section have been submitted by the Department of Education and approved by the Office of Management and Budget under the Paperwork Reduction Act of 1980. A document announcing the effective date will be published later in the **Federal Register.**

FOR FURTHER INFORMATION CONTACT: Pamela Moran or Patricia Beavan, Policy Section, Loans Branch, Policy Development Division, Policy, Training, and Analysis Service, Department of Education, 400 Maryland Avenue SW., (room 4310, ROB–3) Washington, DC 20202. Telephone 202–732–8242. Individuals who use a telecommunication device for the deaf (TDD) may call the Federal Information Relay Service (FIRS) at 1–800–877–8339 between 8 a.m. and 8 p.m., Eastern time, Monday through Friday.

SUPPLEMENTARY INFORMATION: The final regulations make corrections to the final regulations published on December 18, 1992, which contained several self-implementing provisions of the Higher Education Amendments of 1992 (1992 Amendments) (enacted July 23, 1992) (Pub. L. 102–325). The regulations also include two changes made to those self-implementing provisions by the Higher Education Technical Amendments of 1993 (Technical Amendments of 1993) (Pub. L. 102–208) (enacted December 20, 1993).

Waiver of Proposed Rulemaking

It is the practice of the Secretary to offer interested parties the opportunity to comment on proposed regulations. However, with the exception of two changes made to reflect self-implementing provisions of the Technical Amendments of 1993, all other provisions in this regulation reflect corrections to the Federal Family Education Loan Program (FFEL) regulations published on December 18, 1992. The FFEL regulations published on December 18, 1992 were the subject of extensive public comment prior to the publication. The Secretary has also consulted with and received extensive written comments from members of the higher education community in the development of the corrections to the December 18, 1992 regulations and believes that public comment on these technical corrections for publication of regulations does not warrant the solicitation of further public comment. Moreover, the Secretary believes that it is important to have these technical corrections reflected in the Department's regulations as soon as possible. Therefore, the Secretary finds that such a solicitation would be unnecessary and contrary to the public interest under 5 U.S.C. 553(b)(B).

List of Subjects in 34 CFR Part 682

Administrative practice and procedures, Colleges and universities, Education, Loan programs—education, Reporting and recordkeeping requirements, Student aid, Vocational education.

Dated: May 9, 1994.

Richard W. Riley,

Secretary of Education.

The Secretary amends part 682 of title 34 of the Code of Federal Regulations as follows:

PART 682—FEDERAL FAMILY EDUCATION LOAN (FFEL) PROGRAM

1. The authority citation for part 682 continues to read as follows:

Authority: 20 U.S.C. 1071 to 1087, unless otherwise noted.

§ 682.100 [Amended]

2. In § 682.100, paragraph (a)(3), in the first sentence, add the word "undergraduate" before the word "students", in the second sentence, add the parenthetical phrase "(then known as Auxiliary Loans to Assist Students (ALAS))", after the word "PLUS"; in paragraph (a)(4), remove "PLUS" after "SLS", and add, in its place, "ALAS"; remove "part C", and add, in its place, "part A", after the word "Act", add the phrase ", Higher Education Assistance Loans (HEAL) authorized by subpart I of part A of Title VII of the Health Services Act,", remove "borrowers whose loans were made after October 17, 1986", and add, in its place, "loans, or married couples who have a combined indebtedness of at least $7,500 under these programs".

§ 682.10 [Amended]

3. In § 682.101, paragraph (c), in the second sentence, add the word "undergraduate" before the word "students", in the third sentence, remove "Students borrowers", and add, in its place, "Borrowers", add "HEAL, ALAS," after the word "HPSL", remove "or" after "Plus loans", and add a comma in its place, remove the phrase "borrowed after October 16, 1986", and add, in its place, ", or married couples who have a combined indebtedness of at least $7,500 under these programs".

§ 682.102 [Amended]

4. In § 682.102, in paragraph (d), after the second sentence, add a new sentence to read "In the case of a married couple seeking a Consolidation loan, only the holders for one of the applicants must be contacted for consolidation."; in paragraph (e)(3), in the second sentence, add ", but who has not yet entered repayment on the Stafford loan," after the phrase "Stafford loan borrower"; in paragraph (e)(4), in the first sentence, remove "immediately upon disbursement of the loan", and add, in its place, "on the day the loan is disbursed"; in paragraph (e)(5), after "Generally, the", add, "repayment period for a Consolidation loan begins on the day the loan is disbursed. The".

§ 682.200 [Amended]

5. In § 682.200 paragraph, the definition of "Co-maker" is revised; in the definition of "Default", add "or Consolidation" after "PLUS"; in the definition of "Estimated financial assistance", in paragraph (1)(v), add "to the extent funding is available,", after "campus-based aid,", in paragraph (2), "—(i)" is added after "include", paragraphs (2)(i), (2)(ii), and (2)(iii) are redesignated as paragraphs (2)(i)(A), (2)(i)(B), and (2)(i)(C) respectively, paragraph (2)(iv) is redesignated as paragraph (2)(ii), in redesignated paragraph (2)(i)(A), add the word "Nonsubsidized" before the word "Stafford", in redesignated paragraph (2)(i)(B), add the word "or" after the semicolon; in the definition of "Half-time student", in the first sentence, remove "in a participating school", and add, in its place, "in an eligible institution"; in the definition of

"Origination fee", after the second sentence, add a new sentence to read "The lender must pass this fee on to the SLS or PLUS borrower."; in the definition of "Period of Enrollment", in the second sentence, remove the word "normally", and add, in its place, "generally", before the period, add the parenthetical phrase "(e.g., semester, trimester, quarter, length of the student's program or academic year)"; in the definition of "Repayment period", in paragraph (1), before the word "date", remove the word "that", and add, in its place, the word "the", after the word "date", add "the first payment of principal is due from the borrower", paragraph (2)(i) is revised, in paragraph (2)(ii), after the word "period", add the phrase, "for payment of principal", remove the word "ending", and add, in its place, the word "ends", at the end of the paragraph, add a new sentence to read, "Interest accrues and is due and payable from the date of the first disbursement of the loan."; in the definition of "Stafford Loan Program", in the second sentence, remove the words "An unsubsidized", and add, in their place, the words "A nonsubsidized" to read as follows:

§ 682.200 Definitions.

* * * * *

(b) * * *

Co-maker. One of two parents who are joint borrowers on a PLUS loan, each of whom is eligible to borrow, or one of two individuals who are joint borrowers on a Consolidation loan. All co-makers on a loan are jointly and severally liable for repayment of the loan.

* * * * *

Repayment period.

(1) * * *

(2)(i) For PLUS loans, the repayment period for payment of principal begins on the date of the last disbursement of the loan and ends no later than 10 years from that date, exclusive of any period of deferment or forbearance. Interest on the loan accrues and is due and payable from the date of the first disbursement of the loan.

* * * * *

§ 682.201 [Amended]

6. In § 682.201, in paragraph (a), after "if the student", add "who is enrolled or accepted for enrollment on at least a half-time basis at a participating school"; in paragraph (a)(2)(i), after "need for a", add the word "subsidized"; in paragraph (b)(1), after the word "dependent", add "undergraduate"; after the word "student", add "who is enrolled or accepted for enrollment on at least a half-time basis at a participating school and", before the semicolon, add "and the requirement of paragraph (a)(6) of this section"; in paragraph (b)(6), remove the cross reference to paragraphs "(a)(5) and (a)(6)", and add, in its place "(a)(4) and (a)(5)"; in paragraph (c)(1)(i), remove "under this part" and add, in its place "under § 682.100"; paragraph (c)(1)(ii) is revised, new paragraphs (c)(1) (iii) through (vi) are added, paragraph (c)(2)(iii) is revised, and a new paragraph (c)(3) is added to read as follows:

§ 682.201 Eligible borrowers.

* * * * *

(c) * * *

(1) * * *

(ii) Has ceased at least half-time enrollment at a school;

(iii) Is, on the loans being consolidated—

(A) In a grace period preceding repayment;

(B) In repayment status; or

(C) In a default status and has made satisfactory repayment arrangements on the loan;

(iv) Certifies that no other application for a Consolidation loan is pending;

(v) Agrees to notify the holder of any change in address; and

(vi) Certifies that the lender holds an outstanding loan of the borrower which is being consolidated or that the borrower has unsuccessfully sought a loan from the holder of the outstanding loans.

(2) * * *

(iii) Meets the requirements of paragraph (c)(1) of this section, except that their combined indebtedness may not be less than $7,500 on loans eligible for consolidation under § 682.100 and only one borrower must have met the requirements of paragraphs (c)(1)(iv), (v), and (vi) of this section.

(3) A borrower's eligibility to receive a Consolidation loan terminates upon receipt of a Consolidation loan except—

(i) With respect to additional student loans received after the date the Consolidation loan is made; or

(ii) Loans received prior to the date the Consolidation loan was made may be added to the Consolidation loan during the 180-day period after the making of the Consolidation loan.

§ 682.202 [Amended]

7. In § 682.202, paragraph (a)(1)(i)(C), before the semi-colon, add "but before July 1, 1988"; in paragraph (a)(1)(i)(D), after "July 1, 1988", add "and for which the first disbursement is made before October 1, 1992,"; in paragraph (a)(1)(ii), after "the rate", "charged on" is removed and add, in its place "applicable to"; in paragraph (a)(1)(iii), before "the applicable interest rate", add ", for a Stafford loan for which the first disbursement is made before October 1, 1992,"; in paragraph (a)(1)(iv), before "the applicable" add ", for a Stafford loan for which the first disbursement is made before October 1, 1992,"; in paragraph (a)(1)(v), the cross-reference "(a)(1)(i)(C)" is removed, and "(a)(1)(i)(F)" is added in its place; in paragraph (a)(1)(vii), before the word "interest", add the word "applicable"; in paragraph (a)(1)(vii)(A), the cross-reference "(a)(1)(iv)" is removed, and "(a)(1)(viii)" is added, in its place; in paragraph (a)(1)(ix), "December 31" is removed, and "the date the lender credits the adjustment" is added in its place; paragraph (b)(4) is revised; in paragraph (b)(5), ", SLS, PLUS, or Consolidation" is added after "Stafford", in paragraph (c)(5), "the portion of" is removed, "any portion" is removed, and "each disbursement" is added in its place; paragraph (c)(5)(i) is removed, paragraph (c)(5)(ii) is redesignated as paragraph (c)(5)(i), at the end of redesignated paragraph (c)(5)(i) the word "or" is removed, paragraph (c)(5)(iii) is redesignated as paragraph (c)(5)(ii), at the end of redesignated paragraph (c)(5)(ii) the period is removed, and "; or" is added in its place; and new paragraphs (c)(5)(iii) and (h) are added to read as follow:

§ 682.202 Permissible charges by lenders to borrowers.

* * * * *

(b) * * *

(4) Under the SLS and PLUS programs, the lender shall require the borrower to pay on a monthly, or no more frequently than quarterly, or with the borrower's written consent, capitalize on a quarterly basis interest that has accrued during all authorized periods of deferment.

* * * * *

(c) * * *

(5) * * *

(iii) Not released from the restricted account maintained by the school for loan proceeds disbursed by electronic funds transfer in accordance with § 682.207(b)(1)(ii)(B).

* * * * *

(h) *Special allowance.* Under § 682.412(c), a lender may charge a borrower the amount of special allowance paid the Secretary on behalf of the borrower.

§ 682.205 [Amended]

8. In § 682.205, in paragraph (c), remove "60" and add "30", in its place;

in paragraph (d) introductory text, remove "capitalizing —", and add, in its place, "principal and interest, interest only and capitalized interest.", and paragraphs (d)(1) and (d)(2) are removed.

9. In § 682.206, paragraph (e)(1), after "FISL", add ", SLS"; and a new paragraph (e)(3) is added to read as follows:

§ 682.206 Due diligence in making a loan.

* * * * *

(e) * * *

(3) A Federal Consolidation loan may be made to two eligible spouses provided both borrowers agree to be jointly and severally liable for repayment of the loan as co-makers.

* * * * *

§ 682.207 [Amended]

10. In § 682.207, in paragraph (d)(2)(i)(A), remove the word "charges" and add, in its place, the word "costs".

§ 682.209 [Amended]

11. In § 682.209, in paragraph (a)(1), remove "PLUS loan disbursed in one installment or a"; in paragraph (a)(2)(i), in the first sentence, remove "disbursed in more than one installment", remove the word "first" before the word "disbursement" and add, in its place the word "last", at the end of the second sentence, add a new sentence to read, "Interest accrues and is due and payable from the date of the first disbursement of the loan."; in paragraph (a)(2)(ii), at the end of the first sentence, add a new sentence to read "Interest accrues and is due and payable from the date of the first disbursement of the loan."; in paragraph (a)(3)(ii)(C), remove the word "or", in paragraph (a)(3)(ii)(D), remove the period, and add, in its place "; or", and add a new paragraph (a)(3)(ii)(E); in paragraph (b)(1), in the second sentence, remove "Except as provided in paragraph (b)(2) of this section, the" and add, in its place, "The", before the word "first", add the word "amount", after "outstanding principal" remove the comma and add, in its place, a period, and remove the remainder of the sentence; in paragraph (b)(2), in the first sentence, after the word "installments", add "by advancing the next payment due date,"; in paragraph (c)(1)(i), remove "paragraphs (c)(1) (ii) and (iii)" and add, in its place "paragraph (c)(1)(ii)"; in paragraph (h)(4)(ii), after the word "unless", add ", with respect to any loan being consolidated," to read as follows:

§ 682.209 Repayment of a loan.

* * * * *

(a) * * *

(3) * * *

(iii) * * *

(E) An additional 30 days beyond the periods specified in paragraphs (a)(3)(ii)(A)–(a)(3)(ii)(D) of this section in order for the lender to comply with the required deadlines contained in § 682.205(c)(1).

* * * * *

§ 682.210 [Amended]

12. In § 682.210, in paragraph (a)(3)(ii), after the word "loan", add "for which the application was received by an eligible lender on or after January 1, 1993"; in paragraph (a)(8), remove the phrase "as to that loan"; in paragraph (b)(6) introductory text, after the word "when", remove "the" and add, in its place, "a"; in paragraph (c)(3), before "SLS", remove "an" and add, in its place "a Stafford,", after the word "application", add "or other form certified by the school or for multiple holders of a borrower's loans, shared data from the Student Status Confirmation Report,", after the word "outstanding", add "Stafford,", and remove "that is held by the lender".

§ 682.211 [Amended]

13. In § 682.211, paragraph (d), in the second sentence, remove the words "repayment obligation" and add, in their place, the words "agreement to repay the debt"; in paragraph (g), remove "12-month intervals" and add, in its place "intervals not to exceed 12 months,".

§ 682.300 [Amended]

14. In § 682.300, paragraph (a), in the first sentence, after the word "loan", add "and, except for that portion of the loan that repaid a HEAL loan, on a Consolidation loan"; in paragraph (b)(2)(ii), remove the phrase "that represents a portion of the loan"; in paragraph (b)(2)(ii)(A), remove the word "negotiated" and add, in its place the word "cashed".

§ 682.302 [Amended]

15. In § 682.302, in paragraph (d)(1)(vi)(A), remove the word "negotiated" and add, in its place, the word "cashed"; in paragraph (d)(1)(vii), after "returns a claim", add "submitted by the deadline specified in (d)(1)(v) of this section".

§ 682.401 [Amended]

16. In § 682.401, in paragraph (b)(5)(ii), remove "432(h)(3)" and add, in its place, "432(h)(2)"; in paragraph (b)(7), in the first sentence, remove "§ 682.404(i)(2)" and add, in its place,"§ 682.404(h)(2)"; in paragraph (b)(8), in the first sentence, remove "§ 682.404(i)(2)" and add, in its place, "§ 682.404(h)(2)"; in paragraph (b)(9)(vi), remove "all or part of"; in paragraph (b)(9)(vi)(A), remove ", or the portion", remove "a portion of a loan disbursed in more than one installment" and add, in its place, the phrase "each disbursement of a loan"; paragraphs (b)(14) through (b)(22) are redesignated as paragraphs (b)(15) through (b)(23), respectively; a new paragraph (b)(14) is added; in redesignated paragraph (b)(16)(i) after "(i)", remove the word "The" and add in its place "Except in the case of a loan assignment that does not result in a change in the identity of the party to whom payments must be made, the" to read as follows:

§ 682.401 Basic program agreement.

* * * * *

(b) * * *

(14) Guarantee agency verification of default data. A guarantee agency shall respond to an institution's written request for verification of its default rate data for purposes of an appeal pursuant to 34 CFR 668.15(g)(1)(i) within 15 working days of the date the agency receives the institution's written request pursuant to 34 CFR 668.15(g)(7), and simultaneously provide a copy of that response to the Secretary's designated Department official.

* * * * *

§ 682.402 [Amended]

17. In § 682.402, paragraph (a)(2), after the word "co-makers", add the phrase "or a Consolidation loan was obtained jointly by married borrowers"; in paragraph (g)(3)(ii) remove the cross-reference to "(h)(2)" and add, in its place, "(g)(2)"; in paragraph (k), remove the cross- reference to "11 U.S.C. 523(a)(8)(B)" and add, in its place, "11 U.S.C. 523(a)(8)(A)"; in paragraph (k)(2), after the word "deferment", add, "as provided in § 682.210(a)(5)".

§ 682.404 [Amended]

18. In § 682.404, in paragraph (a)(5), after "section," add "upon request of the school,"; in paragraph (h), after the word "particular", and add the word "participating".

19. In § 682.406, paragraph (a)(3) is revised to read as follows:

§ 682.406 Conditions of reinsurance coverage.

(a) * * *

(3) The lender provided—

(i) An accurate collection history to the guaranty agency with the default claim filed on the loan sufficient to support guarantor review for claim payment showing that the lender exercised due diligence in collecting the

loan through collection efforts meeting the requirements of § 682.411, including collection efforts against each endorser; and

(ii) A payment history that supports the claim payment amount.

* * * * *

§ 682.410 [Amended]

20. In § 682.410, in paragraph (b)(6)(ii)(A), in the first sentence, remove from ", or, in the case" to the end of the sentence, in the second sentence, after the word "days", add "during the period specified in paragraph (5)(iv)(B) of this section,"; in paragraph (b)(6)(ii)(C), in the first sentence, after "paragraphs (b)(6)(iii) or (iv) of this section", add "or, in the case of a borrower whom the agency locates through the use of skip-tracing under paragraph (b)(6)(xii) of this section,", after "paragraphs (b)(6)(iii)-(vii) of this section", add "if the written notice described in paragraph (b)(5)(ii) of this section has been sent,", remove "60 day" and add, in its place, "60 days", before the period, add "or receipt of confirmation of the borrower's address, as applicable"; in paragraph (b)(6)(iii)(A) before the semicolon, add ", unless the notice was previously sent pursuant to paragraph (b)(5)(ii) of this section".

§ 682.411 [Amended]

21. In § 682.411, paragraph (a), remove the cross reference "(c)-(l)", and add, in its place, "(c)-(m)"; in paragraph (b), after the heading, add "(1)", at the end of the second sentence, before the period, add ", except as provided in § 682.209(a)(3)(ii)(E)"; a new paragraph (b)(2) is added; paragraph (d)(5) is removed; in paragraph (f), remove the cross- reference to "(f)(1)", and add, in its place, "(l)(1)"; in paragraph (g)(3), after "(k)", add "(1) through (k)(3) and (k)(5)"; in paragraph (g)(4), remove the cross-reference to "(l)(1) (A) or (B)" and add, in its place, "(l)(1) (i) or (ii)"; in paragraph (i)(2)(ii), at the end of the paragraph, remove the word "or"; paragraph "(i)(2)(iii)" is redesignated as paragraph "(i)(2)(iv)", and a new paragraph "(i)(2)(iii)" is added; in paragraph (k)(3), after "(g)", add "(1)", after the word "address", add "or telephone number"; in paragraph (l)(2), remove the word "address" and add, in its place, "telephone number" to read as follows:

§ 682.411 Due diligence by lenders in the collection of guaranty agency loans.

* * * * *

(b) * * *

(2) At no point during the periods specified in paragraphs (c) and (d) of this section may the lender permit the occurrence of a gap in collection activity, as defined in paragraph (i) of this section, of more than 45 days (60 days in the case of a transfer).

* * * * *

(i) * * *

(2) * * *

(iii) The day on which the lender receives written communication from the borrower relating to his or her account; or

* * * * *

§ 682.413 [Amended]

22. In § 682.413, in paragraph (c)(6), remove "that violate § 682.206(f)(1)", and add, in its place, "for which the certification required under § 682.206(f)(1) is not available".

§ 682.604 [Amended]

23. In § 682.604, in paragraph (c)(3)(i), after the word "student", add "or parent"; in paragraph (d)(3), after the word "made", add ", or a registered student withdraws or is expelled prior to the first day of classes of the period of enrollment for which the loan is made"; in paragraph (d)(4), after the word "If", remove "a registered student withdraws or is expelled prior to the first day of classes of the period of enrollment for which the loan is made or fails to attend school during that period, or if", after "reason to document that" remove the word "the" and add, in its place, "a registered", after "attended school during", remove the words "that period", and add, in their place, "the period of enrollment for which the loan is made", after the word "school", add ", must determine the student's withdrawal date as required under § 682.605(b)(1)(ii), and by the deadline described under § 682.605(b)(1)(A) and (B)"; in paragraph (e)(2), after the word "disbursement", add "made by the lender under § 682.207(d)"; paragraphs (e)(2)(i), (e))2)(ii), and (e)(2)(iii) are redesignated as paragraphs (e)(2)(ii), (e)(2)(iii), and "(e)(2)(iv) respectively, a new paragraph (e)(2)(i) is added; at the end of redesignated paragraph (e)(2)(ii) remove the word "or"; at the end of redesignated paragraph (e)(2)(iii) remove the period and add, in its place, "; or"; in paragraph (e)(4), in the first sentence, after the word "If" remove "a disbursement is received by the school within 60 days after the earlier of the dates described in paragraph (e)(1) of this section, if", remove the word "charges" and add, in its place, "costs"; in paragraph (e)(4)(i), after the words "Return the", add "balance of the"; in paragraph (e)(4)(i)(B), remove the word "correct" and add, in its place, "corrected"; in paragraph (e)(4)(ii), remove the word "charges", and add, in its place "costs" to read as follows:

§ 682.604 Processing the borrower's loan proceeds and counseling borrowers.

* * * * *

(e) * * *

(2) * * *

(i) Deliver the proceeds of a late disbursement to a student borrower whose loan application was certified after the borrower ceased enrollment on at least a half-time basis;

* * * * *

24. In § 682.801, paragraph (d), after the semicolon, remove "and"; and add a new paragraph "(f)", to read as follows:

§ 682.801 Provisions required in Plan.

* * * * *

(f) The Authority shall not purchase student loans at a premium amounting to more than one percent of the unpaid principal amount borrowed plus interest accrued to the date of acquisition.

Appendix B—[Amended]

25. In Appendix B, introductory text remove the word "model" and add, in its place, "required".

Appendix D—[Amended]

26. In Appendix D, under the heading "Introduction", in the second paragraph, in the sixth sentence, remove the cross- references to "682.406(a)(2), (a)(4), and 682.413(b)(1)" and add, in their place, "682.406(a)(3), (a)(5), and 682.413(b)"; in the third paragraph, in the first sentence, remove "45-day", and add, in its place, "90-day"; remove the cross-reference to "§ 682.406(a)(4)" and add, in its place, "§ 682.406(a)(3) and (a)(5)"; in the fourth sentence, remove the cross-reference to "682.406(a)(5)" and add, in its place, "682.406(a)(7)"; in the fifth sentence, remove the cross-reference to "682.406(a)(6)" and add, in its place, "682.406(a)(7)"; in I. WAIVER POLICY, A. Definitions, in the definition of "Gap", under the Note, in the second sentence, remove "For" and add, in its place, "This definition applies to"; remove the comma after "1986", and add, in its place, a period and "For such loans,"; in B. General, in paragraph 5., in the second sentence, remove the sentence beginning "In that case" to the end of the paragraph, and add, in its place, "Guarantors must review the due diligence for the 180-day period prior to the default date ensuring the due date of the first payment not later made is the correct payment due date for the borrower."; in E. Cures for Timely Filing Violations and Certain Due Diligence Violations, in paragraph

2. Death, Disability, and Bankruptcy claims., in the second paragraph, in the third sentence, remove "treat the loan as in default" and add, in its place, "return the borrower to the appropriate status that existed prior to the filing of the bankruptcy claim"; in II. DUE DATE OF FIRST PAYMENT, in the first paragraph, in the first sentence, remove the citation to "Section 682.411(b)", and add, in its place, "Section 682.411(b)(1)"; at the end of the first paragraph, add the parenthetical phrase "(Unless the lender establishes the first day of repayment under § 682.209(a)(3)(ii)(E).)"; in the second paragraph, in the fifth sentence, add after "notice.", the parenthetical phrase "(Unless the lender establishes the first day of repayment under § 682.209(a)(3)(ii)(E).)"; in the second paragraph, in the last sentence, remove "20" and add, in its place, "30"; after the last paragraph, add a new paragraph to read, "Please Note: References to the "65th day after receipt of the notice" and "66th day" in the preceding paragraphs should be amended to read "95th day" and "96th day" respectively for lenders subject to § 682.209(a)(3)(ii)(E)."; in "III. QUESTIONS AND ANSWERS", at the end of the first paragraph, add a note to read, "Note: The answer to questions 1 and 4 are applicable only to loans subject to § 682.411 of the FFEL and PLUS program regulations published on November 10, 1986."; in the second paragraph, before "Q", add "1."; in the fourth paragraph, before "Q", add "2."; in the sixth paragraph, before "Q", add "3."; in the eighth paragraph, before "Q", add "4.".

[FR Doc. 94–11656 Filed 5–16–94; 8:45 am]

BILLING CODE 4000–01–P

federal register

Tuesday
May 17, 1994

Part IV

Department of Education

Federal Pell Grant, Federal Perkins Loan, Federal Work-Study, Federal Supplemental Educational Opportunity Grant, Federal Stafford Loan, and Federal Direct Student Loan Programs; Notice

DEPARTMENT OF EDUCATION

Federal Pell Grant, Federal Perkins Loan, Federal Work-Study, Federal Supplemental Educational Opportunity Grant, Federal Stafford Loan, and Federal Direct Student Loan Programs

AGENCY: Department of Education.

ACTION: Notice—Revision of the need analysis methodology for the 1995–96 Award Year.

SUMMARY: The Secretary of Education announces the annual update to the tables used in the need analysis methodology that an institution of higher education must use in calculating expected family contributions for the 1995–96 award year under the Federal Pell Grant, campus-based (Federal Perkins Loan, Federal Work-Study, and Federal Supplemental Educational Opportunity Grant), Federal Stafford Loan and Federal Direct Student Loan programs. The Secretary takes this action under the authority of Title IV of the Higher Education Act of 1965, as amended (HEA).

FOR FURTHER INFORMATION CONTACT: Ms. Edith Bell, Program Specialist, General Provisions Branch, Policy Development Division, U.S. Department of Education, 400 Maryland Avenue, SW. (Room 4318, ROB–3), Washington, DC 20202–5444, telephone (202) 708–7888. Individuals who use a telecommunications device for the deaf (TDD) may call the Federal Information Relay Service (FIRS) at 1–800–877–8339 between 8 a.m. and 8 p.m., Eastern time, Monday through Friday.

SUPPLEMENTARY INFORMATION: The need analysis methodology is used to determine student eligibility for assistance under Title IV of the HEA. This methodology, referred to as the Federal Needs Analysis Methodology, is used to calculate the expected family contribution (EFC) for the Federal Pell Grant, the campus-based (Federal Perkins Loan, Federal Work-Study, and Federal Supplemental Educational Opportunity Grant), Federal Stafford Loan, and Federal Direct Student Loan programs. This methodology is established by statute.

Federal Needs Analysis Methodology

Part F of Title IV of the HEA specifies the criteria, data elements, calculations, and tables for the computation of expected family contributions for the Federal Pell Grant, campus-based, Federal Stafford Loan, and Federal Direct Student Loan programs. In addition, section 478 requires the Secretary to adjust four of the tables—the Income Protection Allowance, the Adjusted Net Worth of a Business or Farm, the Education Savings and Asset Protection Allowance, and the Assessment Schedules and Rates—each award year to take into account inflation for the 12 months between December 31 of the previous year and December 31 of the current year. The changes are based, in general, upon increases in the Consumer Price Index.

For the award year 1995–96, the Secretary is charged with updating the income protection allowances, adjusted net worth of a business or farm, and the assessment schedules and rates to account for inflation that took place between December 1993 and December 1994. However, since the Secretary must publish these tables before December 1994, the increases in the tables must be based upon a percentage equal to the estimated percentage increase in the Consumer Price Index for all Urban Consumers for 1993. The Secretary estimates that the increase in the Consumer Price Index for all Urban Consumers for the period December 1993 through December 1994 will be 3.0 percent. The updated tables for the 1995–96 award year are set forth in sections 1, 2, and 4.

The Secretary must also revise, for each award year, the table on asset protection allowance as provided for in section 478(d) of the HEA. The Education Savings and Asset Protection Allowance table for the award year 1995–96 has been updated below in section 3.

Section 477(b)(5) also requires the Secretary to increase the amount specified for the Employment Expense Allowance to account for inflation based upon increases in the Bureau of Labor Statistics budget of the marginal costs for a two-earner compared to a one-earner family for meals away from home, apparel and upkeep, transportation, and housekeeping services. Therefore, the Secretary is increasing this allowance as described in section 5.

The HEA provides for the following annual updates:

1. Income Protection Allowance

This allowance is the amount of reasonable living expenses that would be associated with the maintenance of an individual or family. The allowance is offset against the family's income and varies by family size. The income protection allowances for parents of dependent students and independent students with dependents other than a spouse for the award year 1995–96 are:

Family size (including student)	Number in college				
	1	2	3	4	5
2	$11,150	$9,240			
3	13,890	11,990	$10,080		
4	17,150	15,240	13,350	$11,440	
5	20,240	18,330	16,430	14,520	$12,620
6	23,670	21,760	19,860	17,960	16,060

For each additional family member add $2,670.
For each additional college student subtract $1,900.

2. Adjusted Net Worth (NW) of a Business or Farm

A portion of the full net value of a farm or business is excluded from the calculation of an expected contribution since: (1) the income produced from such assets is already assessed in another part of the formula; and (2) the formula protects a portion of the value of the assets. The portion of these assets included in the contribution calculation is computed according to the following schedule. This schedule is used for parents of dependent students, independent students without dependents other than a spouse, and independent students with dependents other than a spouse.

If the net worth of a business or farm is—	Then the adjusted net worth is:
Less than $1	$0
$1 to $80,000	0+40% of NW.
$80,001 to $240,000	32,000+50% of NW over $80,000.
$240,001 to $400,000	112,000+60% of NW over $240,000.
$400,001 or more	208,000+100% of NW over $400,000.

3. Education Savings and Asset Protection Allowance

This allowance protects a portion of net worth (assets less debts) from being considered available for postsecondary educational expenses. There are three asset protection allowance tables—one for parents of dependent students, one for independent students without dependents other than a spouse, and one for independent students with dependents other than a spouse.

DEPENDENT STUDENTS

If the age of the older parent is	And there are	
	two parents	one parent
	then the education savings and asset protection allowance is—	
25 or less	0	0
26	2,300	1,600
27	4,600	3,200
28	6,900	4,900
29	9,100	6,500
30	11,400	8,100
31	13,700	9,700
32	16,000	11,300
33	18,300	13,000
34	20,600	14,600
35	22,900	16,200
36	25,200	17,800
37	27,400	19,400
38	29,700	21,100
39	32,000	22,700
40	34,300	24,300
41	35,200	24,700
42	36,100	25,300
43	37,000	25,800
44	38,000	26,500
45	38,900	26,900
46	39,900	27,600
47	40,900	28,300
48	42,000	29,000
49	43,000	29,500
50	44,100	30,200
51	45,500	30,900
52	46,700	31,700
53	48,100	32,500
54	49,700	33,400
55	50,900	34,200
56	52,500	35,000
57	54,100	36,000
58	55,700	37,100
59	57,700	37,900
60	59,500	39,000
61	61,600	40,100
62	63,400	41,300
63	65,600	42,400
64	67,900	43,600
65 or more	70,200	45,100

INDEPENDENT STUDENTS WITHOUT DEPENDENTS OTHER THAN A SPOUSE

If the age of the student is	And the student is	
	married	single
	then the education savings and asset protection allowance is—	
25 or less	0	0
26	2,300	1,600
27	4,600	3,200
28	6,900	4,900
29	9,100	6,500
30	11,400	8,100
31	13,700	9,700
32	16,000	11,300
33	18,300	13,000
34	20,600	14,600
35	22,900	16,200
36	25,200	17,800
37	27,400	19,400
38	29,700	21,100
39	32,000	22,700
40	34,300	24,300
41	35,200	24,700
42	36,100	25,300
43	37,000	25,800
44	38,000	26,500
45	38,900	26,900
46	39,900	27,600
47	40,900	28,300
48	42,000	29,000
49	43,000	29,500
50	44,100	30,200
51	45,500	30,900
52	46,700	31,700
53	48,100	32,500
54	49,700	33,400
55	50,900	34,200
56	52,500	35,000
57	54,100	36,000
58	55,700	37,100
59	57,700	37,900
60	59,500	39,000
61	61,600	40,100
62	63,400	41,300
63	65,600	42,400
64	67,900	43,600
65 or more	70,200	45,100

INDEPENDENT STUDENTS WITH DEPENDENTS OTHER THAN A SPOUSE

If the age of the student is	And the student is	
	married	single
	then the education savings and asset protection allowance is–	
25 or less	0	0
26	2,300	1,600
27	4,600	3,200
28	6,900	4,900
29	9,100	6,500
30	11,400	8,100
31	13,700	9,700
32	16,000	11,300
33	18,300	13,000
34	20,600	14,600
35	22,900	16,200
36	25,200	17,800
37	27,400	19,400
38	29,700	21,100
39	32,000	22,700
40	34,300	24,300
41	35,200	24,700
42	36,100	25,300
43	37,000	25,800
44	38,000	26,500
45	38,900	26,900
46	39,900	27,600
47	40,900	28,300
48	42,000	29,000
49	43,000	29,500
50	44,100	30,200
51	45,500	30,900
52	46,700	31,700
53	48,100	32,500
54	49,700	33,400
55	50,900	34,200
56	52,500	35,000
57	54,100	36,000
58	55,700	37,100
59	57,700	37,900
60	59,500	39,000
61	61,600	40,100
62	63,400	41,300
63	65,600	42,400
64	67,900	43,600
65 or more	70,200	45,100

4. Assessment Schedules and Rates

Two separate assessment schedules—one for dependent students, and one for independent students with dependents other than a spouse—are used in determining the expected family contribution toward educational expenses from family financial resources.

For dependent students, the expected parental contribution is derived from an assessment of the parents' adjusted available income (AAI). For independent students with dependents other than a spouse, the expected contribution is derived from an assessment of the family's AAI. The AAI represents a measure of financial strength which considers both income and assets.

DEPENDENT STUDENTS

If AAI is—	Then the contribution is—
Less than –$3,409	–$750
–$3,409 to $10,000	22% of AAI.
$10,001 to $12,500	$2,200+25% of AAI over $10,000.
$12,501 to $15,100	2,825+29% of AAI over $12,500.
$15,101 to $17,600	3,579+34% of AAI over $15,100.
$17,601 to $20,100	4,429+40% of AAI over $17,600.
$20,101 or more	5,429+47% of AAI over $20,100.

INDEPENDENT STUDENTS WITH DEPENDENTS OTHER THAN A SPOUSE

If AAI is—	Then the contribution is—
Less than −$3,409	−$750
−$3,409 to $10,000	22% of AAI.
$10,001 to $12,500	$2,200+25% of AAI over $10,000.
$12,501 to $15,100	$2,825+29% of AAI over $12,500.
$15,101 to $17,600	$3,579+34% of AAI over $15,100.
$17,601 to $20,100	$4,429+40% of AAI over $17,600.
$20,101 or more	$5,429+47% of AAI over $20,100.

5. Employment Expense Allowance

This allowance for employment-related expenses, which is used for the parents of dependent students and for married independent students with dependents, recognizes additional expenses incurred by working spouses and single-parent households. The allowance is based upon the marginal differences in costs for a two-earner family compared to a one-earner family for meals away from home, apparel and upkeep, transportation, and housekeeping services.

The employment expense allowance for parents of dependent students, married independent students without dependents other than a spouse, and independent students with dependents other than a spouse is the lesser of $2,500 or 35 percent of earned income.

6. Allowance for State and Other Taxes

This allowance for state and other taxes protects a portion of the parents' and student's income from being considered available for postsecondary education expenses. There are four tables for state and other taxes, one each for parents of dependent students, dependent students, independent students without dependents other than a spouse, and independent students with dependents other than a spouse.

PARENTS OF DEPENDENT STUDENTS

If parents' State or territory income of residence is	And parents' total income is—	
	less than $15,000 or	$15,000 or more
	then the percentage is—	
Wyoming, Tennessee, Nevada, Alaska, Texas	3	2
Louisiana, Florida, Washington, South Dakota	4	3
Alabama, Mississippi	5	4
North Dakota, Illinois, Connecticut, New Mexico, Missouri, West Virginia, Arizona, Indiana, Oklahoma, Arkansas	6	5
New Hampshire, Pennsylvania, Colorado, Georgia, Kansas, Kentucky, Idaho	7	6
North Carolina, Virginia, Delaware, South Carolina, Ohio, Utah, Nebraska, Montana, California, New Jersey, Iowa, Vermont, Hawaii	8	7
Massachusetts, Rhode Island, Michigan, Minnesota, Maine, Maryland	9	8
District of Columbia, Wisconsin, Oregon	10	9
New York	11	10
Other	4	3

INDEPENDENT STUDENTS WITH DEPENDENTS OTHER THAN A SPOUSE

If student's State or territory of residence is	And student's total income is—	
	less than $15,000 or	$15,000 or more
	then the percentage is—	
Wyoming, Tennessee, Nevada, Alaska, Texas	3	2
Louisiana, Florida, Washington, South Dakota	4	3
Alabama, Mississippi	5	4
North Dakota, Illinois, Connecticut, New Mexico, Missouri, West Virginia, Arizona, Indiana, Oklahoma, Arkansas	6	5
New Hampshire, Pennsylvania, Colorado, Georgia, Kansas, Kentucky, Idaho	7	6
North Carolina, Virginia, Delaware, South Carolina, Ohio, Utah, Nebraska, Montana, California, New Jersey, Iowa, Vermont, Hawaii	8	7
Massachusetts, Rhode Island, Michigan, Minnesota, Maine, Maryland District of Columbia, Wisconsin, Oregon	9	8
	10	9

INDEPENDENT STUDENTS WITH DEPENDENTS OTHER THAN A SPOUSE—Continued

If student's State or territory of residence is	And student's total income is—	
	less than $15,000 or	$15,000 or more
New York	11	10
Other	4	3

DEPENDENT STUDENTS

If student's State or territory of residence is	The percentage is—
Alaska, Texas, South Dakota, Wyoming, Washington, Tennessee, Nevada	0
Florida, New Hampshire	1
Connecticut, Louisiana, Illinois, North Dakota	2
Mississippi, Arizona, Alabama, Pennsylvania, New Jersey, Missouri	3
Nebraska, Indiana, Colorado, New Mexico, Oklahoma, Kansas, West Virginia, Rhode Island, Virginia, Georgia, Arkansas, Vermont, Michigan	4
Montana, Idaho, Utah, Kentucky, Massachusetts, California, North Carolina, South Carolina, Ohio, Iowa, Delaware, Maine, Wisconsin	5
Oregon, Maryland, Minnesota, Hawaii	6
District of Columbia, New York	7
Other	2

INDEPENDENT STUDENTS WITHOUT DEPENDENTS OTHER THAN A SPOUSE

If student's State or territory of residence is	The percentage is—
Alaska, Texas, South Dakota, Wyoming, Washington, Tennessee, Nevada	0
Florida, New Hampshire	1
Connecticut, Louisiana, Illinois, North Dakota	2
Mississippi, Arizona, Alabama, Pennsylvania, New Jersey, Missouri	3
Nebraska, Indiana, Colorado, New Mexico, Oklahoma, Kansas, West Virginia, Rhode Island, Virginia, Georgia, Arkansas, Vermont, Michigan	4
Montana, Idaho, Utah, Kentucky, Massachusetts, California, North Carolina, South Carolina, Ohio, Iowa, Delaware, Maine, Wisconsin	5
Oregon, Maryland, Minnesota, Hawaii	6
District of Columbia, New York	7
Other	2

(Catalog of Federal Domestic Assistance Numbers: 84.007 Federal Supplemental Educational Opportunity Grant; 84.032 Federal Stafford Loan Program; 84.033 Federal Work-Study Program; 84.038 Federal Perkins Loan Program; 84.063 Federal Pell Grant Program; Federal Direct Student Loan Program, 84.268)

Dated: May 10, 1994.

David A. Longanecker,

Assistant Secretary for Postsecondary Education.

[FR Doc. 94–11881 Filed 5–16–94; 8:45 am]

BILLING CODE 4000–01–P

federal register

Tuesday
May 17, 1994

Part V

Department of Health and Human Services

Centers for Disease Control and Prevention

Preventing the Spread of Vancomycin Resistance—Report From the Hospital Infection Control Practices Advisory Committee; Comment Period and Public Meeting; Notice

DEPARTMENT OF HEALTH AND HUMAN SERVICES

Centers for Disease Control and Prevention

Preventing the Spread of Vancomycin Resistance—A Report From the Hospital Infection Control Practices Advisory Committee Prepared by the Subcommittee on Prevention and Control of Antimicrobial-Resistant Microorganisms in Hospitals; Comment Period and Public Meeting

AGENCY: Centers for Disease Control and Prevention (CDC), Public Health Service (PHS), Department of Health and Human Services (DHHS).

ACTION: Notice.

SUMMARY: This notice is a request for review and comment of the draft document, Preventing the Spread of Vancomycin Resistance—A Report From the Hospital Infection Control Practices Advisory Committee (HICPAC) Prepared by the Subcommittee on Prevention and Control of Antimicrobial-Resistant Microorganisms in Hospitals. The draft document was prepared in collaboration with the National Center for Infectious Diseases (NCID), CDC, and representatives of the American Hospital Association, American Society for Microbiology, Association for Professionals in Infection Control and Epidemiology, Infectious Diseases Society of America, Society for Healthcare Epidemiology of America, and Surgical Infection Society.

DATES: Written comments on the draft document must be received on or before July 18, 1994.

ADDRESSES: Comments on this document should be submitted in writing to the Centers for Disease Control and Prevention (CDC), Attention: VRE Report Center, Mailstop A–07, 1600 Clifton Road, NE., Atlanta, Georgia 30333. The **Federal Register** containing this draft document may be viewed and photocopied at most libraries designated as U.S. Government Depository Libraries and at many other public and academic libraries that receive the **Federal Register** throughout the country. In addition, copies of this **Federal Register** notice document can be obtained by calling (404) 332–2569.

FOR FURTHER INFORMATION CONTACT: The VRE Report Center, telephone (404) 332–2569.

SUPPLEMENTARY INFORMATION: A public meeting for an open discussion of the draft document will be held at the CDC, Atlanta, Georgia, on June 15, 1994. Details about the meeting will be announced in a forthcoming issue of the **Federal Register.**

Dated: May 11, 1994.

Claire V. Broome,

Acting Deputy Director, Centers for Disease Control and Prevention (CDC).

Appendix—Preventing the Spread of Vancomycin Resistance— A Report from the Hospital Infection Control Practices Advisory Committee Prepared by the Subcommittee on Prevention and Control of Antimicrobial-Resistant Microorganisms in Hospitals

Executive Summary

This document contains recommendations for the prevention and control of the spread of vancomycin resistance, with special focus on vancomycin-resistant enterococci (VRE).

A rapid increase in the incidence of infection and colonization with VRE has been reported from U.S. hospitals in the last 5 years. This increase poses several problems, including (a) the lack of available antimicrobial(s) for therapy of infections due to VRE, since most VRE are also resistant to multiple other drugs, e.g., aminoglycoside and ampicillin, previously used for treatment of infections due to these organisms; and (b) the possibility that the vancomycin-resistance genes present in VRE may be transferred to other gram-positive microorganisms such as Staphylococcus aureus.

An increased risk of VRE infection and colonization has been associated with previous vancomycin and/or multi-antimicrobial therapy, severe underlying diseases or immunosuppression, and cardio-thoracic or intraabdominal surgery. Because enterococci can be found in the normal gastrointestinal or female genital tracts, most enterococcal infections have been attributed to endogenous sources within the individual patient. However, recent reports of outbreaks and endemic infections due to enterococci, including VRE, have shown that patient-to-patient transmission of the microorganisms can occur either via direct contact or indirectly via hands of personnel or contaminated patient-care equipment or environmental surfaces.

Prevention and control of the spread of vancomycin resistance will require concerted effort from various departments of the hospital, and can only be achieved if each of the following elements is addressed: (1) Education of hospital staff regarding the problem of vancomycin resistance, (2) early detection and prompt reporting of vancomycin resistance in enterococci and other gram-positive microorganisms by the hospital microbiology laboratory, (3) implementation of appropriate infection-control measures to prevent person-to-person transmission of VRE, and (4) prudent vancomycin use by clinicians.

Introduction

From 1989 though 1993, the percentage of nosocomial enterococcal infections reported to the CDC National Nosocomial Infections Surveillance (NNIS) System that were resistant to vancomycin increased from 0.3% to 7.9%.[1] The increase was due mainly to the 34-fold rise, from 0.4% to 13.6%, of infections due to VRE in intensive-care unit (ICU) patients, although a trend towards increased vancomycin resistance was also noted in non-ICU patients.[1] The occurrence of VRE in NNIS hospitals was directly associated with larger hospital size (≥200 beds) and university affiliation.[1] Other hospitals also have reported increased endemic rates and clusters of VRE infection and colonization.[2–6] The actual increase in incidence of VRE in U.S. hospitals may be larger because vancomycin resistance, in particular moderate vancomycin resistance (as manifested in the VanB phenotype), is not detected consistently with the automated methods used in many clinical laboratories.[7,8]

Vancomycin resistance in enterococci has emerged amidst the increasing incidence of high-level enterococcal resistance to penicillin and aminoglycosides, thus presenting a serious challenge for physicians treating patients with infections due to these microorganisms.[1,4] Treatment options are often limited to combinations of antimicrobials or experimental compounds with unproven efficacy.[9]

The epidemiology of VRE has not been well elucidated; however, certain patient populations have been found to be at increased risk for VRE infection or colonization; these include critically ill patients or those with severe underlying disease or immunosuppression, such as ICU patients or patients in the oncology or transplant wards; those who have had an intra-abdominal or cardio-thoracic surgical procedure, or indwelling urinary or central venous catheter; and those who have had prolonged hospital stay or received multi-antimicrobial and/or vancomycin therapy.[2–6, CDC unpublished data] Because enterococci are part of the normal flora of the gastrointestinal and female genital tracts, most infections with these microorganisms have been attributed to the patient's endogenous flora.[10] However, recent reports have

demonstrated that enterococci, including VRE, can spread by direct patient-to-patient contact or indirectly via transient carriage on hands of personnel [11] or contaminated environmental surfaces and patient-care equipment.[12]

In addition to the existing problem with VRE, the potential emergence of vancomycin resistance in clinical isolates of S. aureus is a serious public health concern. The vanA gene, which is frequently plasmid-borne and confers high-level resistance to vancomycin, can be transferred in vitro from enterococci to a variety of gram-positive microorganisms,[13, 14] including Staphylococcus aureus.[15] Although vancomycin resistance in clinical strains of S. epidermidis or S. aureus has not been reported, a vancomycin-resistant clinical strain of Staphylococcus haemolyticus has been isolated.[16]

In response to the dramatic increase in vancomycin resistance in enterococci, the Subcommittee on the Prevention and Control of Antimicrobial Resistant Microorganisms in Hospitals of the CDC's Hospital Infection Control Practices Advisory Committee (HICPAC) held meetings on November 14, 1993 and February 18, 1994, with representatives from the American Hospital Association, American Society for Microbiology, Association for Professionals in Infection Control and Epidemiology, Infectious Diseases Society of America, Society for Healthcare Epidemiology of America, and Surgical Infection Society. The Subcommittee members agreed that prompt implementation of control measures is needed and developed recommendations to prevent the spread of VRE. The Subcommittee recognizes that data are limited and considerable research will be required to elucidate fully the epidemiology of VRE and determine cost-effective control strategies, and many U.S. hospitals have concurrent problems with other antimicrobial-resistant organisms, such as methicillin-resistant S. aureus and beta-lactam and aminoglycoside-resistant gram-negative bacilli, that may have different epidemiologic features and require different control methods.

Recommendations

Hospital infection control programs, in collaboration with quality improvement programs, microbiology laboratories, clinical departments, and nursing, administrative, and housekeeping services, should develop a comprehensive, institution-specific, strategic plan to detect, prevent, and control infection and colonization with VRE. It is strongly suggested that the following elements be addressed in the plan.

I. Education Program

Continuing education programs for hospital staff should include information concerning the epidemiology of VRE and the potential impact of this pathogen on the cost and outcome of patient care. Because detection and containment of VRE require a very aggressive approach and high performance standards for hospital personnel, special awareness and educational sessions may be indicated.

II. Role of the Microbiology Laboratory in the Detection, Reporting, and Control of VRE

The microbiology laboratory is the first line of defense against the spread of VRE in the hospital. The laboratory's ability to identify enterococci and detect vancomycin resistance promptly and accurately is essential in recognizing VRE colonization and infection and avoiding complex, costly containment efforts that are required when recognition of the problem is delayed. In addition, cooperation and communication between the laboratory and the infection control program will facilitate control efforts substantially.

A. Identification of enterococci: Presumptively identify colonies on primary isolation plates as enterococci by using the colonial morphology, Gram stain, and PYR test. Although identifying enterococci to the species level can help predict certain resistance patterns (e.g., E. faecium is more resistant to penicillin than E. faecalis) and may help determine the epidemiologic relatedness of enterococcal isolates, such identification is not essential if antimicrobial susceptibility testing is performed.

B. Antimicrobial susceptibility testing: Determine vancomycin resistance as well as high-level resistance to penicillin and aminoglycosides [17] for enterococci isolated from blood, sterile body sites (with the possible exception of urine), and other sites as clinically indicated. Evaluate the laboratory's method of susceptibility testing, whether by automated microdilution or disk-diffusion technique, for its ability to detect vancomycin resistance by using E. faecalis ATCC 51299. This strain has a moderate level of vancomycin resistance mediated by the vanB gene, which, unlike high-level resistance mediated by vanA, is difficult to detect by most methods used in clinical laboratories. Laboratories using disk diffusion should incubate plates for 24 hours and read zones of inhibition by using transmitted light.[17,18] If testing as above reveals that the method used by the laboratory is inadequate to detect vancomycin resistance, the laboratory should perform either of the following:

1. Streak 1 µl of standard inoculum (0.5 McFarland) from an isolated colony of enterococci onto BHI agar containing 6 µg/ml of vancomycin, and incubate the inoculated plate for 24 hours at 35 °C. Consider any growth indicative of vancomycin resistance.[17,18]

2. Determine the minimum inhibitory concentration by agar dilution, broth macrodilution, or manual broth microdilution.[17,18]

C. When VRE is isolated from a clinical specimen: 1. Confirm vancomycin resistance by repeating antimicrobial susceptibility testing using any of the recommended methods above, particularly if VRE isolates are unusual in the hospital.

2. Immediately, while performing confirmatory susceptibility tests, notify the patient's primary caregiver, patient-care personnel on the ward on which the patient is hospitalized, and infection control personnel regarding the presumptive identification of VRE, so that the patient can be placed on appropriate isolation precautions promptly (See Section III–A–4). Follow this preliminary report with the (final) result of the confirmatory test. Additionally, highlight the report regarding the isolate to alert staff that isolation precautions are indicated.

D. Screening procedures for detecting VRE in hospitals where VRE has not been detected: In many hospital microbiology laboratories, antimicrobial susceptibility testing of enterococcal isolates from urine or nonsterile body sites such as wounds is not performed routinely; thus, recognition of nosocomial VRE colonization and infection in hospitalized patients may be delayed. Therefore, in hospitals where VRE has not yet been detected, special measures can allow earlier detection of VRE.

1. Antimicrobial susceptibility survey. Perform periodic susceptibility testing on enterococcal isolates recovered from all types of clinical specimens, especially from high-risk patients, such as those in an ICU or oncology or transplant ward. The optimal frequency of testing and number of isolates to test are unknown and may vary from hospital to hospital, depending on the hospital's patient population and number of cultures performed. Hospitals processing large numbers of culture specimens will need to test only a small fraction (e.g., 10%) of enterococcal

isolates every 1–2 months, whereas hospitals processing fewer specimens may need to test all enterococcal isolates during the survey period. The hospital epidemiologist can be consulted to help design a suitable sampling strategy.

2. Culture survey of stools or rectal swabs. In tertiary medical centers and other hospitals with many critically ill (e.g., ICU, oncology, transplant) patients at high risk for VRE infection or colonization, periodic culture surveys of stools or rectal-swabs of such patients can detect the appearance of VRE. Fecal screening is recommended before VRE infections have been identified clinically because most patients colonized with VRE will have intestinal colonization with this organism.[2,4,11] The frequency and intensity of surveillance should be based on the size of the population at risk and the specific hospital unit(s) involved. If VRE have been detected in other institutions in a hospital's area and/or if a hospital wishes to determine whether VRE is present in the hospital despite the absence of recognized clinical cases, stool or rectal-swab culture surveys are very useful. The cost of screening can be reduced greatly by inoculating specimens onto vancomycin-containing selective media [2,12] and restricting screening to those patients who have been in the hospital long enough (e.g., 5–7 days) to have a substantial risk of colonization, or who have been admitted from a facility, such as a tertiary-care hospital or a chronic-care facility, where VRE is known to be present. Once colonization with VRE has been detected, it would be appropriate to begin to screen routinely all of the enterococcal isolates from patients in the hospital (including those from urine and wounds) for vancomycin resistance and to intensify efforts to contain VRE spread, i.e., by strict adherence to handwashing and compliance with isolation precautions (See Section III–A–4 below). Intensified fecal screening for VRE may facilitate earlier identification of colonized patients, leading to more efficient containment of the microorganism.

III. Prevention and Control of Nosocomial Transmission of VRE

Eradication of VRE from the hospital is most likely to succeed when VRE infection or colonization is confined to a few patients on a single ward. Once VRE has become endemic on a ward or has spread to multiple wards or to the community, eradication becomes extremely difficult and costly. Aggressive infection control measures and strict compliance by hospital personnel are required to limit nosocomial spread of VRE.

Control of VRE requires a collaborative institution-wide multidisciplinary effort. Therefore, involve the hospital's quality assurance/improvement department at the outset in order to identify specific problems in hospital operations and patient-care systems and to design, implement, and evaluate appropriate changes in these systems.

A. For all hospitals, including those where VRE have been isolated infrequently or not at all:

1. Notify appropriate hospital staff promptly when VRE is detected. (See Section II-C–2 above).

2. Make clinical staff aware of the hospital's policies regarding VRE-infected or colonized patients. Implement the required procedures as soon as VRE is detected because the slightest delay can lead to further spread of VRE and complicate control efforts. Clinical staff play a pivotal role in limiting the spread of VRE in patient-care areas. Accordingly, continuing education is critical regarding the appropriate response to the detection of VRE (See Section I above).

3. Establish system(s) for monitoring appropriate process and outcome measures, such as cumulative incidence or incidence density of VRE colonization, rate of compliance with VRE isolation precautions and handwashing, interval between VRE identification in the laboratory and implementation of isolation precautions on the wards, and the percentage of previously colonized patients admitted to the ward who are promptly recognized and placed on isolation precautions. Relay these data to the clinical, administrative, laboratory, and support staff as reinforcement to ongoing education and control efforts.[19]

4. Isolation precautions to prevent patient-to-patient transmission of VRE:

a. Place VRE-infected or colonized patients in single rooms or in the same room as other patients with VRE.

b. Wear gloves (clean nonsterile gloves are adequate) when entering the room of a VRE-infected or colonized patient; extensive environmental contamination with VRE has been noted in some studies.[3,11,20] During the course of caring for a patient, a change of gloves may be necessary after contact with material that may contain high concentrations of VRE (e.g., stool).

c. Wear a gown (a clean nonsterile gown is adequate) when entering the room of a VRE-infected or colonized patient if substantial contact with the patient or environmental surfaces in the patient's room is anticipated, or if the patient is incontinent, or has diarrhea, an ileostomy, a colostomy, or a wound drainage not contained by a dressing.

d. i. Remove gloves and gown before leaving the patient's room, and wash hands immediately with an antiseptic soap.[4] Hands can be contaminated via glove leaks[21] or during glove removal and bland soap has been shown to be relatively ineffective in removing VRE from the hands.[22]

ii. Ensure that after glove and gown removal and handwashing, clothing and hands do not contact environmental surfaces potentially contaminated with VRE (e.g., door knob or curtain) in the patient's room.

5. Dedicate the use of noncritical items, such as stethoscope, sphygmomanometer, or electronic rectal thermometer, to a single patient or cohort of patients infected or colonized with VRE.[12] If such devices are to be used on other patient(s), adequately clean and disinfect them first.[23]

6. Culture stools or rectal swabs of roommates of patients newly found to be infected or colonized with VRE to determine their colonization status, and apply isolation precautions as necessary. Perform additional screening of patients on the ward at the discretion of the infection control staff.

7. Adopt a policy for deciding when patients infected and/or colonized with VRE can be removed from isolation precautions. The optimal requirements remain unknown; however, since VRE colonization may persist indefinitely,[4] stringent criteria may be appropriate, e.g., VRE-negative results on at least three consecutive occasions, one or more weeks apart, for all cultures from multiple body sites (including stool or rectal swab, perineal area, axilla or umbilicus, and wound, Foley catheter, and/or colostomy sites if present).

8. Establish a system of highlighting the records of infected or colonized patients so that they can be recognized and isolated promptly upon readmission to the hospital because patients with VRE may remain colonized for long periods following discharge from the hospital.

9. Discharging VRE-infected or colonized patients:

Consult local and state health departments in developing a plan regarding the discharge of VRE-infected or colonized patients to nursing homes, other hospitals or home health-care, as part of a larger strategy for handling patients with resolving infections and patients colonized with antimicrobial-resistant microorganisms. This plan should emphasize handwashing and the appropriate use of gloves and gowns when having direct contact with the

above-mentioned patients who are transferred from hospitals.

B. In hospitals with endemic VRE or continued VRE transmission despite implementation of measures described in III-A–1 through III-A–9:

1. Focus control efforts initially on ICUs and other areas where VRE transmission rate is highest.[4] Such units may serve as a reservoir of VRE, from where VRE spreads to other wards when patients are well enough to be transferred.

2. Cohort staff so that nurses and others providing care to patients with VRE do not provide care to noncolonized patients during the same work shift.[4] Healthcare workers who must provide care to both groups of patients during the same shift should make every effort to limit their movement between the two patient groups.

3. Carriers of enterococci on the hospital staff have rarely been implicated in the transmission of this organism.[11] Nonetheless, in conjunction with careful epidemiological studies and upon the direction of the infection control staff, examine personnel for chronic skin and nail problems and perform hand and rectal-swab cultures on them as well as on other personnel providing care to VRE-infected or colonized patients. Remove VRE-positive personnel epidemiologically linked to VRE transmission from the care of VRE-negative patients.

4. The results of several enterococcal outbreak investigations suggest a potential role for the environment in the transmission of enterococci. In one study, nonoutbreak-related strains of vancomycin-susceptible enterococci were isolated from cultures of environmental surfaces in patient rooms before and after terminal room cleaning and disinfection.[CDC unpublished data] In institutions experiencing ongoing VRE transmission, verify that the hospital has adequate procedures for the routine care, cleaning, and disinfection of environmental surfaces (e.g., bedrails, charts, carts, doorknobs, faucet handles, bedside commodes) and that these procedures are being followed by housekeeping personnel. Some hospitals may elect to perform focused environmental cultures before and after cleaning of rooms housing patients with VRE to verify the efficacy of hospital policies and procedures. All environmental culturing should be approved and supervised by the infection control program in collaboration with the clinical laboratory.[11,12,20,24]

5. Consider sending representative VRE isolates to reference laboratories for strain typing by pulsed field gel electrophoresis or other suitable techniques to aid in defining reservoirs and patterns of transmission.

IV. Prudent Vancomycin Use

Vancomycin use has been reported consistently as a risk factor for colonization and infection with VRE[2,4,12,25] and may increase the possibility of the emergence of vancomycin-resistant S. aureus (VRSA) and/or vancomycin-resistant S. epidermidis. Therefore, all hospitals, even those where VRE has never been detected, should develop a comprehensive antimicrobial-utilization plan to provide education for medical staff, oversee surgical prophylaxis, and develop guidelines for the proper use of vancomycin. Guideline development should be part of the hospital's quality improvement program and involve participation from the hospital's pharmacy and therapeutics committee, hospital epidemiologist, and infection control, infectious diseases, medical, and surgical staffs. The guidelines should include the following considerations:

A. Situations in which the use of vancomycin is appropriate or acceptable:

1. For treatment of serious infections due to beta-lactam resistant gram-positive microorganisms. Clinicians should be aware that vancomycin may be less rapidly bactericidal than beta-lactam agents for beta-lactam susceptible staphylococci.[26,27]

2. For treatment of infections due to gram-positive microorganisms in patients with serious allergy to beta-lactam antimicrobials.

3. When antibiotic-associated colitis (AAC) fails to respond to metronidazole therapy or if AAC is severe and potentially life-threatening.

4. Prophylaxis, as recommended by the American Heart Association, for endocarditis following certain procedures in patients at high risk for endocarditis.[28]

5. Prophylaxis for surgical procedures involving implantation of prosthetic materials or devices at institutions with a high rate of infections due to MRSA or methicillin-resistant S. epidermidis.[29] A single dose administered immediately before surgery is sufficient unless the procedure lasts more than 6 hours, in which case the dose should be repeated. Prophylaxis should be discontinued after a maximum of 2 doses.[30–32]

B. Situations in which the use of vancomycin should be discouraged:

1. Routine surgical prophylaxis.[30]

2. Empiric antimicrobial therapy for a febrile neutropenic patient, unless there is strong evidence at the outset that the patient has an infection due to gram-positive microorganisms (e.g., inflamed exit site of Hickman catheter), and the prevalence of infections due to beta-lactam-resistant gram-positive microorganisms (e.g., MRSA) in the hospital is substantial.[2,33–39]

3. Treatment in response to a single blood culture positive for coagulase-negative staphylococcus, if other blood cultures drawn in the same time frame are negative, i.e., if contamination of the blood culture is likely. Because contamination of blood cultures with skin flora, e.g., S. epidermidis, may cause vancomycin to be inappropriately administered to patients, phlebotomists and other personnel who obtain blood cultures should be properly trained to minimize microbial contamination of specimens.

4. Continued empiric use for presumed infections in patients whose cultures are negative for beta-lactam-resistant gram-positive microorganisms.[37,40]

5. Systemic or local (e.g., antibiotic lock) prophylaxis for infection or colonization of indwelling central or peripheral intravascular catheters or vascular grafts.[41–46]

6. Selective decontamination of the digestive tract.

7. Eradication of MRSA colonization.[47,48]

8. Primary treatment of AAC.[49]

9. Routine prophylaxis for very low-birth-weight infants.[50]

10. Routine prophylaxis for patients on continuous ambulatory peritoneal dialysis.[51,52]

Further study is required to determine the most effective methods for influencing the prescribing practices of physicians, although a variety of techniques may be useful.[53–56] In addition, key parameters of vancomycin use can be tracked through the hospital's quality assurance/improvement process or as part of the drug-utilization review of the pharmacy and therapeutics committee and the medical staff.

V. Detection and Reporting of VRSA

The microbiology laboratory has the primary responsibility for detecting and reporting the occurrence of VRSA in the hospital.

A. Antimicrobial susceptibility testing: Routinely test all clinical isolates of S. aureus for susceptibility to vancomycin by using standard methods.[17]

B. When VRSA is identified in a clinical specimen:

1. Confirm vancomycin resistance in S. aureus by repeating antimicrobial

susceptibility testing using standard methods.[17] It is advisable to restreak the colony to ensure that the S. aureus culture is pure. The most common causes of false-positive VRSA report are susceptibility testing on mixed cultures and misidentification of VRE, Leukonostoc, S. haemolyticus or Pediococcus as VRSA.[57,58]

2. Immediately, while performing confirmatory testing, notify the hospital's infection control personnel, the patient's primary caregiver, and patient-care personnel on the ward on which the patient is hospitalized so that the patient can be placed promptly on isolation precautions adapted from, depending on the site(s) of infection or colonization,[59] those recommended for VRE infection or colonization. (See Section III-A–4 through III-B–5 above.)

3. Immediately notify the state health department and CDC, and send the isolate through the state health department to CDC (telephone number 404–639–1550) for confirmation of vancomycin resistance.

References

1. Centers for Disease Control and Prevention. Nosocomial enterococci resistant to vancomycin—United States, 1989–1993. MMWR 1993; 42:597–599.

2. Rubin LG, Tucci V, Cercenado E, Eliopoulos G, Isenberg HD. Vancomycin-resistant *Enterococcus faecium* in hospitalized children. Infect Control Hosp Epidemiol 1992; 13:700–705.

3. Karanfil LV, Murphy M, Josephson A, et al. A cluster of vancomycin-resistant *Enterococcus faecium* in an intensive care unit. Infect Control Hosp Epidemiol 1992; 13:195–200.

4. Handwerger S, Raucher B, Altarac D, et al. Nosocomial outbreak due to *Enterococcus faecium* highly resistant to vancomycin, penicillin, and gentamicin. Clin Infect Dis 1993; 16:750–755.

5. Frieden TR, Munsiff SS, Low DE, et al. Emergence of vancomycin-resistant enterococci in New York City. Lancet 1993; 342:76–79.

6. Boyle JF, Soumakis SA, Rendo A, et al. Epidemiologic analysis and genotypic characterization of a nosocomial outbreak of vancomycin-resistant enterococci. J Clin Microbiol 1993; 31:1280–1285.

7. Tenover FC, Tokars J, Swenson J, Paul S, Spitalny K, Jarvis W. Ability of clinical laboratories to detect antimicrobial agent-resistant enterococci. J Clin Microbiol 1993; 31:1695–1699.

8. Sahm DF, Olsen L. In vitro detection of enterococcal vancomycin resistance. Antimicrob Agents Chemother 1990; 34:1846–1848.

9. Moellering RC, Jr. The Garrod lecture. The enterococcus: a classic example of the impact of antimicrobial resistance on therapeutic options. J Antimicrob Chemother 1991; 28:1–12.

10. Murray BE. The life and times of the enterococcus. Clin Microbiol Rev 1990; 3:46–65.

11. Rhinehart E, Smith N, Wennestern C, et al. Rapid dissemination of beta-lactamase-producing aminoglycoside-resistant *Enterococcus faecium*. N Engl J Med 1990; 323:1814–1818.

12. Livornese LL, Jr., Dias S, Samel C, et al. Hospital-acquired infection with vancomycin-resistant *Enterococcus faecium* transmitted by electronic thermometers. Ann Intern Med 1992; 117:112–116.

13. Uttley AH, George RC, Naidoo J, et al. High-level vancomycin-resistant enterococci causing hospital infections. Epidemiol Infect 1989; 103:173–181.

14. Leclercq R, Derlot E, Weber M, Duval J, Courvalin P. Transferable vancomycin and teicoplanin resistance in *Enterococcus faecium*. Antimicrob Agents Chemother 1989; 33:10–15.

15. Noble WC, Virani Z, Cree R. Cotransfer of vancomycin and other resistance genes from *Enterococcus faecalis* NCTC12201 to *Staphylococcus aureus*. FEMS Microbiology Letters 1992; 93:195–198.

16. Veach LA, Pfaller MA, Barrett M, Koontz FP, Wenzel RP. Vancomycin resistance in *Staphylococcus haemolyticus* causing colonization and bloodstream infection. J Clin Microbiol 1990; 28:2064–2068.

17. National Committee for Clinical Laboratory Standards. Methods for dilution antimicrobial susceptibility tests for bacteria that grow aerobically. Publication M7–A3. 3rd ed. Villanova, PA: National Committee for Clinical Laboratory Standards, 1993.

18. Swenson JM, Ferraro MJ, Sahm DF, Charache P, The National Committee for Clinical Laboratory Standards Working Group on Enterococci, Tenover FC. New vancomycin disk diffusion breakpoints for enterococci. J Clin Microbiol 1992; 30:2525–2528.

19. Nettleman MD, Trilla A, Fredrickson M, Pfaller M. Assigning responsibility: using feedback to achieve sustained control of methicillin-resistant *Staphylococcus aureus*. Am J Med 1991; 91 suppl 3B:228S–232S.

20. Zervos MJ, Kauffman CA, Therasse PM, Bergman AG, Mikesell TS, Schaberg DR. Nosocomial infection by gentamicin-resistant *Streptococcus faecalis:* an epidemiologic study. Ann Intern Med 1987; 106:687–691.

21. Olsen RJ, Lynch P, Coyle MB, Cummings J, Bokete T, Stamm WE. Examination gloves as barriers to hand contamination in clinical practice. JAMA 1993; 270:350–353.

22. Wade JJ, Desai N, Casewell MW. Hygienic hand disinfection for the removal of epidemic vancomycin-resistant *Enterococcus faecium* and gentamicin-resistant *Enterobacter cloacae*. J Hosp Infect 1991; 18:211–218.

23. Favero MS, Bond WW. Sterilization, disinfection, and antisepsis in the hospital. In: Manual of Clinical Microbiology. Washington, D.C.: American Society for Microbiology, 1991:183–200.

24. Wells VD, Wong ES, Murray BE, Coudron PE, Williams DS, Markowitz SM. Infections due to beta-lactamase-producing, high-level gentamicin-resistant *Enterococcus faecalis. Ann Intern Med 1992; 116:285–292.*

25. Weinstein RA. Epidemiology and control of nosocomial infections in adult intensive care units. Am J Med 1991; 30:2525–2528.

26. Small PM, Chambers HF. Vancomycin for *Staphylococcus aureus* endocarditis in intravenous drug users. Antimicrob Agents Chemother 1990; 34:1227–1231.

27. Cantoni L, Glauser MP, Bille J. Comparative efficacy of daptomycin, vancomycin, and cloxacillin for the treatment of *Staphylococcus aureus* endocarditis in rats and role of test conditions in this determination. Antimicrob Agents Chemother 1990; 34:2348–2353.

28. American Heart Association Committee on Rheumatic Fever and Infective Endocarditis. Prevention of bacterial endocarditis. Circulation 1984; 70:1123–1124.

29. Maki DG, Bohn MJ, Stolz SM, Kroncke GM, Acher CW, Myerowitz PD. Comparative study of cefazolin, cefamandole, and vancomycin for surgical prophylaxis in cardiac and vascular operations. J Thorac Cardiovasc Surg 1992; 104:1432–1434.

30. Conte JE, Jr., Cohen SN, Roe BB, et al. Antibiotic prophylaxis and cardiac surgery: A prospective double-blind comparison of single-dose versus multiple-dose regimens. Ann Intern Med 1972; 76:943.

31. DiPiro JT, Cheung RPF, Bowden TA, et al. Single-dose systemic antibiotic prophylaxis of surgical wound infections. Am J Surg 1986; 152:552.

32. Nelson CL, Green TG, Porter RA, et al. One day versus seven days of preventive antibiotic therapy in orthopedic surgery. Clin Orthop 1983; 176:258–263.

33. Rubin M, Hathorn JW, Marshall D, Gress J, Steinberg S, Pizzo PA. Gram-positive infections and the use of vancomycin in 550 episodes of fever and neutropenia. Ann Intern Med 1988; 108:30–35.

34. Shenep JL, Hughes WT, Roberson PK, et al. Vancomycin, ticarcillin, and amikacin compared with ticarcillin-clavulanate and amikacin in the empirical treatment of febrile neutropenic children with cancer. N Engl J Med 1988; 319:1053–1058.

35. Pizzo PA, Hathorn JW, Hemenz J, et al. A randomized trial comparing ceftazidime alone with combination antibiotic therapy in cancer patients with fever and neutropenia. N Engl J Med 1986; 315:552–558.

36. Karp JE, Dick JD, Angelopulos C, et al. Empiric use of vancomycin during prolonged treatment-induced granulocytopenia. Am J Med 1986; 81:237–242.

37. Pestotnik SL, Evans RS, Burke JP, et al. Therapeutic antibiotic monitoring: surveillance using a computerized expert system. Am J Med 1990; 88:43.

38. European Organization for Research and Treatment of Cancer (EORTC) International Antimicrobial Therapy Cooperative Group, National Cancer Institute of Canada Clinical Trials Group. Vancomycin added to empirical combination antibiotic therapy for fever in granulocytopenic cancer patients. J Infect Dis 1991; 163:951–958.

39. Riikonen P. Imipenem compared with ceftazidime plus vancomycin as initial therapy for fever in neutropenic children with cancer. Pediatr Infect Dis 1991; 10:918–923.

40. Maki DG, Schuma AA. A study of antimicrobial misuse in a university hospital. Am J Med Sci 1978; 275:271–282.

41. Ranson MR, Oppenheim BA, Jackson A, Kamthan AG, Scarffe JH. Double-blind placebo controlled study of vancomycin prophylaxis for central venous catheter insertion in cancer patients. J Hosp Infect 1990; 15:95–102.

42. Hendrickson KJ, Posell KR, Schwartz CL. A dilute solution of vancomycin and heparin retains antibacterial and anticoagulant activities. J Infect Dis 1989; 157:600–601.

43. Schwartz CL, Hendrickson KJ, Roghmann K, Posell K. Prevention of bacteremia attributed to luminal colonization of tunneled central venous catheters with vancomycin-susceptible organism. J Clin Oncol 1990; 8:1591–1597.

44. Hendrickson KJ, Dunne WM. Modification of central venous catheter flush solution improves in vitro antimicrobial activity. J Infect Dis 1992; 166:944–946.

45. Gaillard I, Merlino R, Pajot N, et al. Conventional and nonconventional modes of vancomycin administration to decontaminate the internal surface of catheters colonized with coagulase-negative staphylococci. J Paren Enter Nutr 1990; 14:593–597.

46. Kaplan AH, Gilligan PH, Facklam RR. Recovery of resistant enterococci during vancomycin prophylaxis. J Clin Microbiol 1988; 26:1216–1218.

47. Gradon JD, Wu EH, Lutwick LI. Aerosolized vancomycin therapy facilitating nursing home placement. Acta Pharmacother 1992; 26:209–210.

48. Weathers J, Riggs D, Santeiro M, Weibley RE. Aerosolized vancomycin for treatment of airway colonization by methicillin-resistant *Staphylococcus aureus*. Pediatr Infect Dis 1990; 9:220–221.

49. Johnson S, Homann SR, Bettin KM, et al. Treatment of asymptomatic *Clostridium difficile* carriers (fecal excretors) with vancomycin or metronidazole. Ann Intern Med 1992; 117:297–302.

50. Moller JC, Nachtrodt G, Richter A, Tegtmeyer FK. Prophylactic vancomycin to prevent staphylococcal septicemia in very-low-birth-weight infants. Lancet 1992; 340:424.(abstract)

51. Lam TY, Vas SI, Oreopoulos DG. Long-term intraperitoneal vancomycin in the prevention of recurrent peritonitis during continuous ambulatory peritoneal dialysis: Preliminary results. Perit Dial Inter 1991; 11:281–282.

52. Bestani B, Freer K, Read D, et al. Treatment of gram-positive peritonitis with two intraperitoneal doses of vancomycin in continuous ambulatory peritoneal dialysis patients. Nephron 1987; 45:283–285.

53. Soumerai SB, McLaughlin TJ, Avorn J. Quality assurance for drug prescribing. Quality Assurance in Health Care 1990; 2:37–58.

54. Everitt DE, Soumerai SB, Avorn J, Klapholz H, Wessels M. Changing surgical antimicrobial prophylaxis practices through education targeted at senior department leaders. Infect Control Hosp Epidemiol 1990; 11:578–583.

55. Soumerai SB, Avorn J, Taylor WC, Wessels M, Maher D, Hawley SL. Improving choice of prescribed antibiotics through concurrent reminders in an educational order form. Medical Care 1993; 31:552–558.

56. Soumerai SB, McLaughlin TJ, Avorn J. Improving drug prescribing in primary care: a critical analysis of the experimental literature. Milbank Quarterly 1989; 67:268–317.

57. Orgberg PK, Sandine WE. Common occurrence of plasmid DNA and vancomycin resistance in *Leuconostoc* spp. Appl Environ Microbiol 1984; 48:1129–1133.

58. Schwalbe RS, Ritz WJ, Verma PR, Barranco EA, Gilligan PH. Selection for vancomycin resistance in clinical isolates of *Staphylococcus haemolyticus*. J Infect Dis 1990; 161:45–51.

59. Garner JS, Simmons BP. Guideline for isolation precautions in hospitals. Infect Control Hosp Epidemiol 1983; 4(Suppl):245–325.

[FR Doc. 94–11913 Filed 5–16–94; 8:45 am]

BILLING CODE 4163–18–P

Federal Register

Tuesday
May 17, 1994

Part VI

Department of Transportation

Federal Aviation Administration

14 CFR Part 23

Airworthiness Standards; Emergency Exit Provisions for Normal, Utility, Acrobatic, and Commuter Category Airplanes; Final Rule

DEPARTMENT OF TRANSPORTATION

Federal Aviation Administration

14 CFR Part 23

[Docket No. 26324; Amendment No. 23–46]

RIN 2120–AD33

Airworthiness Standards; Emergency Exit Provisions for Normal, Utility, Acrobatic, and Commuter Category Airplanes

AGENCY: Federal Aviation Administration (FAA), DOT.

ACTION: Final rule.

SUMMARY: This final rule amends the emergency egress airworthiness standards for normal, utility, acrobatic, and commuter category airplanes. This amendment adds requirements for ditching and flightcrew emergency exits for these airplane categories, and provides alternative emergency exit requirements for commuter category airplanes that are consistent with the requirements for similarly sized small transport airplanes. This amendment is intended to ensure that emergency exits are available to all flightcrew members, that exits are available to all multiengine airplane occupants for emergency egress during an emergency landing in water, and to provide alternative exit requirements for commuter category airplanes consistent with the existing transport category airworthiness standards.

EFFECTIVE DATE: June 16, 1994.

FOR FURTHER INFORMATION CONTACT: Mike Downs, Aerospace Engineer, Standards Office (ACE–110), Small Airplane Directorate, Federal Aviation Administration, room 1544, 601 East 12th Street, Kansas City, Missouri 64106, telephone (816) 426–5688.

SUPPLEMENTARY INFORMATION:

Background

This amendment is based on Notice of Proposed Rulemaking (NPRM) No. 90–20 (55 FR 35544, August 30, 1990). All comments received in response to Notice No. 90–20 have been considered in adopting this amendment.

Notice 78–14, published on October 10, 1978 (43 FR 46734), proposed interim airworthiness requirements for increased takeoff gross weight and passenger seating capacity of certain existing small, propeller-driven, multiengine airplanes. That rulemaking action resulted from a petition for rulemaking to allow certain small airplanes to be type certificated to maximum takeoff weights greater than 12,500 pounds without complying with the transport category type certification requirements of part 25. Special Federal Aviation Regulations (SFAR) 41 (44 FR 53723, September 17, 1979), which became effective October 17, 1979, resulted from Notice 78–14.

In the early 1980's, the FAA explored the feasibility of a new part 24 that would provide airworthiness standards for a new light transport category airplane. The proposal was withdrawn because it was not cost effective. SFAR 41 provides alternative type design standards for an airplane of the same gross weight that would be required to comply with part 25 airworthiness standards. Section 5 of SFAR 41 provides specific requirements for passenger entry doors and additional emergency exits. That section requires, in part, that the passenger entry door qualify as a floor-level emergency exit. For airplanes with a total seating capacity of 15 or fewer, that section requires, in addition to the passenger entry door, an emergency exit as defined in § 23.807(b), on each side of the cabin. For airplanes with a total passenger seating capacity of 16 through 23, that section required three emergency exits as defined in § 23.807(b), with one on the same side as the door and two on the side opposite the door.

SFAR 41 was amended (45 FR 25047, April 14, 1980) for clarification and editorial corrections. SFAR 41B (45 FR 80973, December 8, 1980) further amended the regulation to specify additional requirements for optional compliance with the International Civil Aviation Organization (ICAO), Annex 8, Part III, Airworthiness Standards, which apply to airplanes weighing 5,700 kg (12,566 pounds) or more.

After the expiration of SFAR 41B on October 17, 1981, and termination of the Light Transport Airplane Airworthiness Review, the FAA issued SFAR 41C (47 FR 35153, August 12, 1982), effective September 13, 1982. The amended SFAR: (1) Eliminated the 12,500-pound maximum zero fuel weight restriction; (2) limited the number of passenger seats to 19 for those small propeller-driven, multiengine airplanes that operate at a certificated gross takeoff weight in excess of 12,500 pounds; and (3) relaxed the landing distance determination requirement, making it consistent with the similar requirements in part 23 and part 25. The wording of section 5 was amended, in part, to require that airplanes with a total passenger seating capacity of 16 through 19 be designed with three emergency exits, as defined in § 23.807(b), with one on the same side as the door and two on the side opposite the door.

On November 15, 1983, Notice 83–17 (48 FR 52010) proposed to amend parts 21, 23, 36, 91 and 135 of the Federal Aviation Regulations (FAR) to adopt certification procedures, airworthiness and noise standards, and operating rules for a new commuter category for airplanes type certificated to the FAR. That notice, in part, proposed to amend § 23.807 to require the same number of emergency exits in commuter category airplanes as the number required for airplanes meeting the SFAR 41C requirements.

On December 12, 1986, Notice 86–19 (51 FR 44878), titled "Small Airplane Airworthiness Review Program Notice No. 1," was published proposing new requirements that would enhance cabin safety in normal, utility, and acrobatic category airplanes. Since final rules for commuter category airplanes had not been adopted at the time Notice 86–19 was published, that notice did not address commuter category airplanes. In Notice 86–19, the FAA referred to the proposed commuter category airplane rule and noted that additional rulemaking action would be initiated to enhance the cabin safety of commuter category airplanes if the proposals in Notice 83–17 were adopted.

As a result of Notice 83–17, amendment 23–34 (52 FR 1806, January 15, 1987) was adopted specifying minimum airworthiness standards for a new commuter category airplane. That final rule, in part, amended § 23.807 by adding a new paragraph (d) that required commuter category airplanes with a seating capacity of 15 or fewer to have an emergency exit on each side of the cabin in addition to the entry door; and commuter category airplanes with a total seating capacity of 16 through 19 to have three emergency exits, with one on the same side as the passenger entry door and two on the opposite side. Those requirements were substantively identical to the requirements in SFAR 41C.

As a result of Notice 86–19, amendment 23–36 (53 FR 30802, August 15, 1988) was adopted to provide upgraded airworthiness standards for cabin safety and occupant protection for part 23 airplanes.

Since final action to incorporate commuter category airplane airworthiness standards into the FAR had not been completed at the time Notice 86–19 was published, requirements for commuter category airplanes were not specifically addressed in the proposals of that notice. The proposals in Notice 86–19 were formulated to be compatible with the commuter category airplane cabin safety airworthiness standards that were

adopted in amendment 23–34, with the exception of the requirements for dynamic testing of seats and the requirements for shoulder harnesses at the passenger seats. The cabin safety standards adopted by amendment 23–36 were formulated considering both the public comments to Notice 86–19 and the changes to part 23 adopted by amendment 23–34. The requirements for the number of emergency exits in commuter category airplanes, as adopted by amendment 23–34, were not changed by amendment 23–36. The commuter category final rule moved the requirements in § 23.807(d)(3) to a new § 23.811(b), and the requirements of § 23.807(d)(4) were moved to a new § 23.813.

The intent of section 5 of SFAR 41 was to require an additional emergency exit (above the requirements for normal category airplanes) for airplanes with a total seating capacity, including pilot seats, of 12 to 15; therefore, when an airplane with a seating capacity of 11 or fewer, including pilot seats, was certificated to the airworthiness standards of SFAR 41, the emergency exit requirements in § 23.807 for normal category airplanes were applicable. Since the amendment of the emergency exit standards of § 23.807(d)(1)(i), the FAA has reconsidered the number of exits required to commuter category airplanes with a cabin seating capacity of fewer than 9 passengers. Section 23.807(d)(1) is applicable to every commuter category airplane, including those airplanes with a total passenger seating capacity of 9 or fewer. This section increases the level of cabin safety requirements for commuter category airplanes.

Since incorporation of amendment 23–34 into part 23, airplane manufacturers and modifiers have petitioned the FAA for exemption from § 23.807(d)(1)(i) or § 23.807(d)(1)(ii). Those standards require that: Commuter category airplanes with a total passenger seating capacity of 15 or fewer have an emergency exit on each side of the cabin in addition to the passenger entry door; and commuter category airplanes with a total passenger seating capacity of 16 through 19 have three emergency exits in addition to the passenger entry door, with one emergency exit on the same side as the door and two exits on the opposite side. Frequently, those petitions have noted the differences in the requirements of § 23.807(d)(1) and the emergency exit requirements for similarly sized transport category airplanes. Section 25.807(c)(1) requires, in part, that transport category airplanes with a passenger seating capacity of 19 passengers or fewer provide at least one emergency exit on each side of the fuselage and that the main entry door may be considered one of the emergency exits when it meets the requirements of §§ 25.807(c)(1) and 25.783.

The petitioners, in general, have proposed to provide the number of emergency exits required by § 25.807(c)(1) for transport category airplanes instead of complying with the requirements of § 23.807(d)(1). In support of these petitions, the petitioners point out that their commuter category airplanes have compensating features that include a variety of other cabin safety provisions and meet the higher levels of safety afforded by small transport category airplanes. Other cabin safety provisions include larger exits, wider aisles, emergency lighting and additional exit marking features, all of which exceed the current requirements for commuter category airplanes. In granting these petitions the FAA stated that the number of emergency exits is only one aspect of overall cabin safety that is provided by the airplane design. For this reason, the FAA initiated a project to amend part 23 to provide that, as an alternative to compliance with the requirements of § 23.807(d)(1), commuter category airplanes may be designed with the number of emergency exists required for transport category airplanes in § 25.807(c)(1).

The FAA conducted a review of the cabin safety standards required for commuter category airplanes in part 23 and the cabin safety provisions required for small transport category airplanes in part 25. The review showed that part 25 standards require numerous features, including a specified emergency exit configuration, emergency lighting, minimum aisle width, and additional exit markings that aid the occupants of transport category airplanes in locating, reaching, and passing through the emergency exits. These additional airworthiness requirements are important factors in minimizing the time required for occupants to safely exit the airplane through a limited number of exits. As an alternative, this final rule allows commuter category airplanes to comply with emergency exit requirements and other cabin safety standards that are substantively the same as those for similarly sized transport category airplanes.

This final rule amends the emergency exit requirements to provide the following: (1) Additional emergency landing requirements that give the airplane occupants every reasonable chance of escaping serious injury in a survivable crash landing; (2) emergency exit size and step up/step down limitations that enable the airplane occupants to readily pass through the exits; (3) emergency exit marking requirements that ensure the exits can be identified easily in an emergency; (4) emergency lighting requirements that ensure adequate lighting for rapid egress from the airplane; and (5) wider aisles and additional emergency exit access requirements that ensure the airplane occupants have a path to the available emergency exits.

This final rule also adopts new requirements for emergency exit ditching provisions for multiengine airplanes that are type certificated to the airworthiness standards of part 23. The FAA anticipates an increase in the use of multiengine normal and commuter category airplanes in overwater operation. Airports located near large bodies of water have increased the number of departures and approaches that are conducted over water. Since ditching provisions are critical for occupant egress following an emergency landing in water, this proposal would require that the airplane design provide the airplane occupants with a means of exiting the airplane following an emergency landing in water.

Further, this final rule adopts a new airworthiness standard to require that, in emergency landings, emergency exits are readily available to crewmembers when the airplane is configured in a manner that makes the passenger emergency exits inaccessible to the crew. The FAA has previously required additional emergency exits for normal category or commuter category sized airplane designs, where the cabin interiors were configured with cargo nets or other barriers that blocked crewmember access to the passenger emergency exits. Although § 135.87(c)(7) requires at least one emergency or regular exit to be available for crew egress in certain airplanes used in cargo-only operations, there is no such requirement in part 23. This newly adopted requirement is also similar to the standard that is used for transport category airplanes.

Discussion of Comments

General

Interested persons were invited to participate in the development of these final rules by submitting written data, views, or arguments to the regulatory docket on or before February 26, 1991. Five commenters responded to Notice No. 90–20. Minor technical and editorial changes have been made to the proposed rules based on relevant comments received and after further review by the FAA.

One commenter expresses support for the entire proposal without making any specific comments. Another commenter provides comments only to specific proposals. One commenter feels that the commuter category requirements of part 23 already provide an adequate level of safety and asks for an explanation of why the FAA is using part 25 requirements in part 23. This requested explanation can be found in the background section above.

One commenter expresses general agreement with the objectives of the rulemaking and discusses the factors that the commenter considers important to the rapid evacuation of an airplane. This commenter lists those factors as exit availability, adequate exit size, reasonable step up and step down criteria at emergency exits, and illumination of the area immediately outside the exit. The FAA agrees that these factors are also important but questions the relative significance the commenter ascribes to them. The commenter did not submit any supporting data for the comment.

One commenter supports the addition of the small transport category airplane safety features of part 25 to part 23 commuter category airplanes, but strongly opposes tying these features to a reduction in the number of emergency exits. This rulemaking action provides alternative emergency exit requirements for part 23 commuter category airplanes that are consistent with those requirements for similarly sized part 25 small transport category airplanes. This amendment will give the applicant the option of either meeting existing § 23.807(d)(1) emergency exit requirements, or reducing the number of emergency exits to that required by § 23.807(d)(4) and meeting additional cabin safety requirements specified in § 23.807(d)(4). These requirements are similar to those standards required for part 25 small transport airplanes.

Discussion of Comments to Specific Sections of Part 23

Proposal 1. This proposal contains the authority citation for part 23.

Proposal 2. This proposal would add a downward inertia load requirement to the emergency landing ultimate static load factors when an applicant for type certification chooses to comply with the alternate emergency exit requirements of § 23.807(d)(4). This is intended to ensure a specific minimum download airframe strength to protect occupants from structural failures that could prevent their exiting the airplane through the emergency exits or the passenger entry door after an emergency landing.

One commenter believes the 6g downward force is excessive for part 23 airplanes. The FAA disagrees. In the 1970's, the FAA and the National Aeronautics and Space Administration (NASA) conducted considerable research concerning the crash dynamic characteristics of small general aviation airplanes. NASA conducted a test series of 21 controlled full-scale impact tests on single-engine and twin-engine general aviation airplanes. Results from those tests provided a substantial qualitative and quantitative data base regarding the crash behavior and occupant impact protection characteristics of small general aviation airplanes. The results of the research and tests revealed that the downward force occurring during the full-scale impact tests were in excess of 6g in most cases; therefore, the 6g downward inertia load factor was proposed to ensure a minimum download requirement.

One commenter recommends higher downward inertia loads and a correspondingly higher descent velocity, which was proposed as an alternate approach to establishing the static downward load factor. The FAA disagrees. Although downward load factors may be greater than 6g during emergency landing conditions, the FAA intends to make the airworthiness standards for commuter category airplanes consistent with those for small transport airplanes; therefore, the 6g downward load factor will remain as a minimum requirement. Accordingly, that portion of § 23.561(b)(2)(iv) that specifies the use of any lesser force is deleted in the final rule. The removal of this lesser force from the proposed rule further standardizes the alternate cabin safety and emergency exit requirements of part 23 commuter category airplanes with that of part 25 small transport airplanes. The alternative downward force was similarly deleted from part 25. This proposal is adopted with the aforementioned change.

Proposal 3. This proposal would move certain requirements for commuter category airplane passenger entry doors and associated integral stairs from § 23.807(d)(1) to a new § 23.783(f), and add size and shape requirements for the passenger entry door. The final rule clarifies those standards that apply to the passenger entry doors of any commuter category airplane, regardless of the number of emergency exits. One comment was received and it supports the FAA's proposal. Accordingly, this proposal is adopted as proposed.

Proposal 4. Proposed new § 23.812 would require that an emergency lighting system be installed when the applicant for type certification chooses to comply with the alternate emergency exit provisions of proposed § 23.807(d)(4). Proposed § 23.803(b) requires the use of that emergency lighting system during the emergency evacuation demonstration required for commuter category airplanes.

Two comments were received on this proposal. Both commenters suggest that proposed § 23.803(b) be rewritten to eliminate the evacuation demonstration when they comply with § 23.807(d)(4). Both commenters argue that, in their experience, part 25 emergency exit requirements ensure rapid evacuation as long as the airplane is relatively small.

The FAA disagrees. Emergency evacuation demonstrations for passenger-carrying airplanes are consistent with aviation safety. In the absence of showing an ability to evacuate airplanes and the correction of faults in designs and procedures as they are revealed by tests, these demonstrations will result in lives saved. Furthermore, it is not justifiable to exempt an applicant from § 23.803 because the applicant chooses to comply with § 23.807(d)(4), since the applicant that complies with § 23.807(d)(4) has one less emergency exit than the applicant that complies with § 23.807(d)(1). This proposal is adopted as proposed.

Proposal 5. This proposal would add requirements for emergency exits that are available to the flightcrew in an emergency landing. These requirements are intended to ensure that the crew has ready access to an emergency exit when their access to the cabin area aft of the cockpit is blocked by cargo constraints or other barriers. Both normal category (single & multiengine) and commuter category airplanes have been modified for hauling freight, and have included cargo restraint barriers that blocked crew access to the emergency exit in the passenger compartment. Accordingly, these standards were proposed to apply to all categories of airplanes certificated to the airworthiness standards of part 23. These requirements are similar to existing requirements in § 25.807(f) for transport category airplanes.

One commenter suggests that the FAA provide guidance through an advisory circular or other means on how to determine when the cabin entry door or other passenger emergency exit does not offer a convenient and readily accessible means of evacuation for the flightcrew. The FAA agrees that further guidance may be required; however, the FAA will review the need for further guidance after the adoption of the final rule.

One commenter supports the proposal to establish a standard minimum for flightcrew emergency exits; however, the commenter believes that the FAA should conduct tests to determine the minimum exit size that would accommodate pilots in both the ninety-fifth and fifth size percentiles.

Tests to determine exit size were conducted prior to the adoption of a Civil Air Regulations (CAR) amendment in 1962; however, the biometric data derived was taken from the general population and not from a population comprised of pilots. The results of the tests were instrumental in the determination of emergency exit and aisle width requirements. The size of the exits has been determined previously and no change was proposed in the notice. This proposal is adopted without change.

Proposal 6. This proposal would allow type certification of commuter category airplanes configured with one emergency exit on the side of the cabin opposite the passenger entry door when additional cabin safety features are provided in the airplane design. This proposal states the additional cabin safety features required to comply with the alternative emergency exit provisions. This proposal would move specific requirements for the passenger entry door and associated integral stairs from § 23.807(d)(1) to proposed § 23.785(f). This proposal would move from § 23.807(d)(1) to § 23.807(d)(3) the requirement that each emergency exit that is not a floor-level exit be located over a wing or, if the exit is not less than six feet from the ground, have a means to assist occupants in reaching the ground.

Because there are many airports where takeoffs and landings are conducted over large bodies of water, this proposal includes airworthiness standards for multiengine airplanes that require emergency exits for ditching to be located above the waterline. This proposal would require that the airplane design provide the airplane occupants with a means of exiting the airplane following an emergency landing in water.

Nine comments were received regarding proposed §§ 23.807(d) and 23.807(e). Two commenters state that, according to the preamble to the NPRM, § 23.807(d)(1)(i) is intended to apply to all commuter category airplanes. The commenters further state that this appears inconsistent and impractical when considering a two-place cargo airplane with a cargo barrier immediately aft of the entrance door. The commenters propose to solve this problem by making proposed § 23.807(d)(4)(i) applicable to all commuter category airplanes.

The FAA disagrees. Proposed § 23.807(d)(1) is intended to apply to all commuter category airplanes, but § 23.807(d)(1)(i) is intended to apply only to commuter category airplanes with a total seating capacity of 15 or fewer. Furthermore, the problem of compliance for two-place cargo airplanes is not considered to be a certification problem because there is no special certification for cargo airplanes. The purpose of this rule is to provide alternative emergency exit and cabin safety requirements for commuter category airplanes that are consistent with the airworthiness standards used by small transport airplanes in part 25. This will enable the applicant to choose the requirements of § 23.807(d)(4) instead of § 23.807(d)(1).

Two commenters propose to delete the reference to § 23.803(b) in proposed § 23.807(d)(4)(iii), stating that it is unnecessary. The FAA disagrees. The reference to § 23.803(b) is a necessary part of § 23.807(d)(4)(iii), directing the applicant to the remaining safety requirements of § 23.807(d)(4) that must be met.

One commenter states that multiengine airplanes are required to have emergency exits in accordance with § 23.807(a) and that proposed § 23.807(e) would effectively require two additional exits, even if the § 23.807(a) exit, the main door, or both are above the waterline. The FAA agrees. The intent of the rule is to require that all multiengine airplanes have available exits for emergency egress following an emergency landing in water; therefore, the reference made in the NPRM under § 23.807(e) to § 23.807(b) or (d) is changed to § 23.807(a) or (d). Section 23.807(e)(1) remains unchanged.

One commenter supports the optional exit configuration introduced by § 23.807(d)(4) and states that it is in substantive alignment with part 25.

One commenter opposes the proposal to allow the manufacturer to reduce the number of exits available in exchange for including additional emergency evacuation design features. The commenter further states that emergency evacuation is most critically affected by the proximity of exits to evacuees, and that by reducing the number of exits, evacuation time will increase. The commenter then proposes to extend the useful time for evacuation by requiring the additional part 25 requirement of low flammability interior materials.

The FAA agrees that the number and proximity of exits in an airplane are two parameters that influence evacuation time. One of the purposes of this rulemaking action is to provide an alternative emergency exit configuration for commuter category airplanes without decreasing cabin safety. Since the service history of small transport category airplanes with regard to emergency exit standards has proven successful, this rule provides the applicant with the option of reducing the number of emergency exits required. The compensation for this reduction is accomplished by meeting additional cabin safety requirements. The overall effect is an equivalent level of safety between § 23.807(d)(1) and § 23.807(d)(4), and the standardization of alternative cabin safety and emergency exit requirements for small transport airplanes and commuter category airplanes that comply with § 23.807(d)(4). The request for additional airworthiness standards for low flammability interior materials is beyond the scope of this rulemaking.

One commenter recommends increasing the minimum size of the exit in §§ 23.807(d)(4)(i) and (ii), to the size of a type I exit and requiring it to be floor level. The commenter states that this is necessary because it is the only exit besides the main entry door, and it replaces two other type III exits. The commenter further contends that the flow rates for the type III exits, as listed in § 25.807, support the commenter's opinion that the type III exits are slow and cumbersome to use; and with such obstacles as allowed in proposed § 23.807(d)(3), their efficiency will be reduced even more.

The FAA disagrees. A requirement for exits larger than those proposed is outside the scope of the rulemaking for the reasons noted above. Furthermore, by meeting the requirements of the proposed exit size and the other cabin safety requirements of § 23.807(d)(4)(iii), minimum requirements for this alternative to § 23.807(d)(4) have been established. This proposal is adopted with the aforementioned changes.

Proposal 7. This proposal would add emergency exit marking requirements applicable when an applicant for type certification chooses to comply with the alternate emergency exit provisions of proposed § 23.807(d)(4). These proposed requirements would result in emergency exits that are easier to locate in adverse conditions and easier to open once located. The proposal includes additional requirements for both internal and external marking of the emergency exits.

One commenter suggests that, even though some additions to the current § 23.811 may be necessary, a full part 25

treatment is not necessarily appropriate for small part 23 commuter airplanes. The commenter recommends that the FAA reconsider this proposal and suggests that a human factor analysis study, determining how people react in commuter size cabins, be completed before any rulemaking activity begins.

The FAA disagrees. Section 23.811(c) provides additional airworthiness requirements for emergency exit markings that would be applicable when certification to the emergency exit provisions of § 23.807(d)(4) is requested. The choice is that of the applicant. Also, the service experience gained by part 25 small transport airplanes, and the experience gained from part 23 commuter category applicants that have been granted exemptions from the emergency exit requirements of § 23.807(d)(1), has proven successful. Accordingly, this alternative is considered suitable for all applicants and further human factor analysis studies are not required.

One commenter states that proposed § 23.811(c) would require exit path markings that would be unnecessary and burdensome and suggests that it would provide no added safety benefit. The FAA disagrees. This section requires a means to assist occupants in locating emergency exists in dense smoke and does not limit these means to floor proximity lighting only. This proposal is adopted as proposed with the exception of minor editorial corrections.

Proposal 8. This proposal would add requirements for an emergency lighting system that would apply to an applicant for type certification that chooses to comply with the alternative emergency exit provisions of proposed § 23.807(d)(4). The proposal defines specific minimum requirements for supplying power, arming, and activating the emergency lighting system. The impact activation requirement is consistent with that for emergency locator transmitters. The proposal would also set certain requirements for illumination, function, and the survivability standards of the emergency lighting system. An emergency lighting system that complies with these proposed requirements would aid occupants in locating the emergency exits and exiting after an emergency landing.

One commenter states that more and brighter lights may be detrimental to a fast egress when all human factors are considered. The commenter recommends additional research before any rulemaking activity begins.

The FAA disagrees. The requirements for part 25 airplanes have been found to be suitable for part 23 and an alternative to the current part 23 standard. Furthermore, these improvements in lighting have already been tested by applicants that have been granted exemptions from § 23.807.

One commenter does not understand why the requirement to provide emergency lighting should be limited to applicants that have chosen to comply with § 23.807(d)(4) requirements. The commenter further suggests that emergency lighting requirements should be related only to the number of passengers carried. The FAA disagrees. The emergency lighting requirements are not dependent solely on the number of passengers carried, but are a fundamental aspect of improving cabin safety in emergency evacuations.

Another commenter states that § 23.812(f)(2) implies the use of an inertia switch to activate emergency lighting. The commenter adds that the history of these devices has been poor and the commenter is not convinced of their worth. The FAA disagrees. The use of an inertia switch was not implied in the proposal. The FAA is not mandating the use of specific products in this rulemaking action but rather is addressing an airworthiness requirement. How the applicant chooses to comply with that requirement is left entirely to the applicant.

Another commenter strongly favors emergency lighting but believes that requirements should be adapted for small commuter category airplanes. The commenter suggests that the proposed rule is acceptable through § 23.812(g) and adds that § 23.812(h) should be modified to require bright lights at the emergency exits inside the airplane and outside the exits other than floor level doors.

The FAA disagrees. As proposed these requirements are suitable for the small commuter airplanes and are consistent with the requirements for similarly sized small transport category airplanes.

The same commenter suggests that the floor proximity emergency escape path marking is unnecessary and that § 23.812(h)(3) should be deleted.

The FAA disagrees. Floor proximity emergency escape path marking is intended to allow passengers, who have become oriented within the cabin during the period of general overhead illumination, to find their way to exits unassisted after the general overhead illumination becomes obscured. There are many combinations of lights, markers, and signs that might serve this objective, and each must be shown adequate for the particular cabin interior and exit arrangement; therefore, this performance standard is used to allow design flexibility and ensure the necessary safety.

The same commenter adds that the requirements of § 23.812(i) through § 23.812(l), are acceptable; however, general illumination is not necessary, and § 23.812(l)(1) should probably specify 50 percent instead of 75 percent illumination. General illumination requirements are considered to be an essential element in the standards for providing adequate lighting for the airplane occupants to reach, operate, and egress through the entry door or the emergency exits in emergency situations when the normal interior lighting has been rendered inoperative.

This proposed emergency lighting standard was developed with consideration for: emergency lighting standards used for small transport airplanes; additional airworthiness requirements applied to commuter category airplanes when exemptions to the requirements of §§ 23.807(d)(1) (i) or (ii), were granted; and the need to ensure that the ability to egress a commuter category airplane is maintained when the number of emergency exits is fewer than the number required by §§ 23.807(d)(1) (i) or (ii). It is not necessary to require that all lights, except those directly damaged by the fuselage breakup, remain operative after any single vertical separation of the fuselage during a crash landing. The FAA considers the present requirement that permits 25 percent of certain emergency lights, in addition to those directly damaged by the fuselage breakup, to be rendered inoperative (§ 23.812(l)(2)) adequate to accomplish safe evacuation. This proposal is adopted as proposed.

Proposal 9. This proposal would add requirements to ensure emergency exit accessibility when an applicant for type certification chooses to comply with the alternative emergency exit provisions of proposed § 23.807(d)(4). Structural failures or yielding of the airframe can occur during an emergency landing or a crash event and may result in one or more emergency exits or the passenger door being rendered unusable. Since the total number of exits available for emergency egress can be fewer with the alternate emergency exit requirements, this proposal defines minimum unobstructed aisle width at the passenger entry door. This proposal would also add other requirements to ensure that any partitions or doorways within the passenger compartment do not hinder occupant access to the exits during an emergency situation.

One commenter suggests that the proposal needs to be clarified so that the

lavatory compartment, with a seat approved for use during takeoff and landing, is not considered to be a passenger compartment prohibited from having a door installed between it and the remainder of the passenger compartment. The commenter believes that the provisions of § 23.813(b)(5) provide an adequate and equivalent level of safety whenever doors are installed and that § 23.813(b)(4) should be deleted.

The FAA agrees that clarification of § 23.813(b)(4) and § 23.813(b)(5) is needed. Accordingly, after the semicolon following "compartments" in § 23.813(b)(4), the word "and" will be deleted. The remaining part of the paragraph will read, "unless the door has a means to latch it in the open position. The latching means must be able to withstand the loads imposed upon it by the door when the door is subjected to the inertia loads resulting from the ultimate static load factors prescribed in § 23.561(b)(2)." Proposed § 23.813(b)(5) is adopted with the change noted above.

Two commenters suggest that proposed § 23.813(b)(2) be deleted because it is not appropriate to small airplanes that do not use cabin attendants. The FAA disagrees. Since not all exits may be operational during an emergency evacuation, the intent of the rule is to ensure minimum unobstructed aisle width and passenger entryways in order to maintain occupant access to exits. The term "assistance," as used in the proposal, does not necessarily mean cabin attendants. This proposal is adopted with the aforementioned changes.

Proposal 10. This proposal would require increased aisle widths when an applicant for type certification chooses to comply with the alternative emergency exit provisions of proposed § 23.807(d)(4). The proposed increased aisle width requirements are intended to ensure that the airplane passengers can reach an exit in an emergency situation even though the floor structure has been warped or there are seats or other items protruding into the normal aisle space.

One commenter supports the establishment of 12 inches as the minimum aisle width and is against allowing aisles as narrow as 9 inches in certain cases. The commenter feels that there is never a time when such a narrow aisle is appropriate. The FAA disagrees. Service experience in small transport category airplanes with a passenger seating capacity of 10 or fewer and an aisle width not less than 9 inches has been found satisfactory.

One commenter states that the expanded aisle widths would cause an increase in the fuselage width of most commuter airplanes and that the proposal would, in most cases, negate the use of any alternate emergency exit provisions. The comment does not reveal whether the commenter has considered that variations in seating layout for new designs would accommodate the requirement and the commenter has supplied no data to support this contention.

One commenter states that, with two abreast seating, aisle width requirements do not control passenger flow in an emergency evacuation. The commenter suggests that if the FAA has evidence that aisle width restricts passenger flow when three abreast seating is used, then the proposed § 23.815(b) should be made applicable only to such arrangements. The commenter adds that the FAA should consider that proposed § 23.815(b) would discriminate against airplanes with two abreast seating because the increased aisle width is generally impractical.

The FAA disagrees. The purpose of the increased aisle width is to increase the probability that occupants can reach an exit during an emergency situation, even though seats or other items may be protruding into the normal aisle space. It is recognized that changes in aisle width have little significant effect on evacuation if minimum airworthiness standards for cabin safety and emergency exits are first met. However, part of the intent of this amendment is to establish these minimum alternative requirements for part 23 commuter category airplanes consistent with those for part 25 small transport category airplanes. This proposal is adopted as proposed.

Final Regulatory Evaluation, Final Regulatory Flexibility Determination, and Trade Impact Assessment

Proposed changes to Federal regulations must undergo several economic analyses. First, Executive Order 12866 directs that each Federal agency shall propose or adopt a regulation only upon a reasoned determination that the benefits of the intended regulation justify its costs. Second, the Regulatory Flexibility Act of 1980 requires agencies to analyze the economic effect of regulatory changes on small entities. Third, the Office of Management and Budget directs agencies to assess the effects of regulatory changes on international trade. In conducting these analyses, the FAA has determined that this rule: (1) Will generate benefits that justify its costs and is not a "significant regulatory action" as defined in the Executive Order; (2) is not "significant" as defined in DOT's Policies and Procedures; (3) will not have a significant impact on a substantial number of small entities; and (4) will not constitute a barrier to international trade. These analyses, available in the docket, are summarized below.

Regulatory Evaluation Summary

Flightcrew Exit

Few airplane models will likely be affected by this part of the rule. For purposes of illustrating representative costs, it is assumed that one new model will be type certificated three years following the effective date of the rule and that 10 airplanes will be manufactured annually during a ten-year production run, each with an average operating life of 25 years. The FAA estimates that the additional exit will cost $7,300 per airplane, totalling $730,000. Increased fuel cost resulting from the added weight of the exit is estimated to be $200 per airplane per year, totalling $500,000. These costs total $1,230,000, or $525,000 discounted at seven percent to present value.

Historical accident data do not reveal that crewmember fatalities have occurred as a result of inability to exit cargo-laden airplanes in otherwise survivable accidents. However, such an occurrence is a possibility. As applied to the above representative certification, the additional flightcrew exits would be cost beneficial if only one fatality was prevented. For the purpose of quantifying benefits, the FAA currently uses a minimum value of $2,600,000 to statistically represent a human fatality avoided.

Emergency Ditching Requirements

Most current multiengine airplane models would satisfy the ditching requirements of the rule. Future models with side exits above the waterline will experience little or no incremental costs. However, designs with overhead emergency exits in lieu of side exits above the waterline would cost approximately $11,000 per airplane, totalling $1,100,000 (using the same production run and service life assumptions used above). Increased fuel cost resulting from added weight is estimated to be $300 per airplane per year, totalling $750,000. These costs total $1,850,000, or $790,000 discounted.

Historical accident data indicate that between 1975 and 1991, 14 multiengine commuter airplanes experienced an emergency forced landing in water, resulting in 43 fatalities in total. Although there is no evidence that the

fatalities occurred solely because the available emergency exits were below the waterline (hence making it difficult if not impossible to exit the airplane), such a situation is a distinct possibility absent the new requirements. As applied to the above type certification, the modified emergency exits would be cost-beneficial if only two fatalities were prevented.

Remaining Provisions of the Rule

With the exception of the provisions related to the flightcrew exit and emergency ditching, the rule changes will not result in additional costs to manufacturers. Most of the changes will provide manufacturers of certain commuter category airplanes with a choice of either:

(1) Designing to current Part 23 cabin safety standards which require two emergency exits (in addition to the passenger entry door) for airplanes with a total passenger seating capacity of 15 or fewer, or three emergency exits (in addition to the passenger entry door) for airplanes with a total passenger seating capacity of 16 to 19; or

(2) Designing to the alternative Part 23 standards that mirror the current requirements for Part 25 small transport category airplanes requiring only one exit (in addition to the passenger entry door) for airplanes with a passenger seating capacity of 19 or fewer, and also requiring many other cabin safety improvements that are not currently required for Part 23 commuter airplanes.

A manufacturer would choose the alternative that is more cost-effective. A nonquantifiable benefit of this rule is that it will make the cabin safety requirements of commuter category airplanes consistent with those of small transport category airplanes of similar passenger capacities.

Regulatory Flexibility Determination

The Regulatory Flexibility Act of 1980 (RFA) was enacted by Congress to ensure that small entities are not unnecessarily and disproportionately burdened by government regulations. The RFA requires agencies to review rules which may have "a significant economic impact on a substantial number of small entities."

As defined by implementing FAA Order 2100.14A, the size threshold for designating an aircraft manufacturer a small entity is 75 employees; that is, an aircraft manufacturer with more than 75 employees is not considered to be a small entity. A substantial number of small entities is defined as a number which is not fewer than 11 and which is more than one-third of the small entities subject to the rule. Since there are fewer than 11 small airplane manufacturers that will be affected by the new requirements, the rule will not have a significant economic impact on a substantial number of small entities.

International Trade Impact Assessment

The rule will have little or no impact on trade for either American firms doing business in foreign countries or foreign firms doing business in the United States. In the United States, foreign manufacturers will have to meet U.S. requirements, and thus will gain no competitive advantage. In foreign countries, American manufacturers need not comply with these requirements if the foreign country does not require them and, therefore, will not be placed at a competitive disadvantage relative to foreign manufacturers.

Federalism Implications

The regulations herein will not have substantial direct effects on the States, on the relationship between the national government and the States, or on the distribution of power and responsibilities among the various levels of government. Therefore, in accordance with Executive Order 12612, it is determined that this final rule does not have federalism implications to warrant the preparation of a Federalism Assessment.

Conclusion

This final rule upgrades the emergency egress requirements of the airworthiness standards for normal, utility, acrobatic, and commuter category airplanes. Applicants seeking new type certification for all airplane categories will be required to provide for ditching and flightcrew emergency exits to ensure that emergency exits are available to all flightcrew members and that emergency exits are available to all multiengine airplane occupants during an emergency landing in water. In addition, this final rule provides an applicant seeking type certification for commuter category airplanes the option of meeting exit requirements that are consistent with the existing transport category standards.

For the reasons discussed in the preamble, and based on the findings in the Regulatory Evaluation, the FAA has determined that this regulation is nonsignificant under Executive Order 12866. In addition, the FAA certifies that this regulation will not have a significant economic impact, positive or negative, on a substantial number of small entities. This regulation is not considered significant under DOT Regulatory Policies and Procedures (44 FR 11034, February 26, 1979). A regulatory evaluation of the regulation has been placed in the docket. A copy may be obtained by contacting the person identified under **FOR FURTHER INFORMATION CONTACT.**

List of Subjects in 14 CFR Part 23

Aircraft, Aviation safety, Signs and symbols.

Issued in Washington, DC on May 11, 1994.

David R. Hinson,

Administrator.

The Amendment

In consideration of the foregoing, the Federal Aviation Administration amends part 23 of the Federal Aviation Regulations (14 CFR part 23) as follows:

PART 23—AIRWORTHINESS STANDARDS: NORMAL, UTILITY, ACROBATIC, AND COMMUTER CATEGORY AIRPLANES

1. The authority citation for part 23 continues to read as follows:

Authority: 49 U.S.C. 1344, 1354(a), 1355, 1421, 1423, 1425, 1428, 1429, 1430; 49 U.S.C. 106(g).

2. Section 23.561 is amended by adding a new paragraph (b)(2)(iv) to read as follows:

§ 23.561 General.

* * * * *

(b) * * *

(2) * * *

(iv) Downward, 6.0g when certification to the emergency exit provisions of § 23.807(d)(4) is requested; and

* * * * *

3. Section 23.783 is amended by adding a new paragraph (f) to read as follows:

§ 23.783 Doors.

* * * * *

(f) In addition, for commuter category airplanes, the following requirements apply:

(1) Each passenger entry door must qualify as a floor level emergency exit. This exit must have a rectangular opening of not less than 24 inches wide by 48 inches high, with corner radii not greater than one-third the width of the exit.

(2) If an integral stair is installed at a passenger entry door, the stair must be designed so that, when subjected to the inertia loads resulting from the ultimate static load factors in § 23.561(b)(2) and following the collapse of one or more legs of the landing gear, it will not reduce the effectiveness of emergency egress through the passenger entry door.

4. Section 23.803 is amended by designating the existing text as paragraph (a), and by adding a new paragraph (b) to read as follows:

§ 23.803 Emergency evacuation.

* * * * *

(b) In addition, when certification to the emergency exit provisions of § 23.807(d)(4) is requested, only the emergency lighting system required by § 23.812 may be used to provide cabin interior illumination during the evacuation demonstration required in paragraph (a) of this section.

5. A new § 23.805 is added to read as follows:

§ 23.805 Flightcrew emergency exits.

For airplanes where the proximity of the passenger emergency exits to the flightcrew area does not offer a convenient and readily accessible means of evacuation for the flightcrew, the following apply:

(a) There must be either one emergency exit on each side of the airplane, or a top hatch emergency exit, in the flightcrew area;

(b) Each emergency exit must be located to allow rapid evacuation of the crew and have a size and shape of at least a 19- by 20-inch unobstructed rectangular opening; and

(c) For each emergency exit that is not less than six feet from the ground, an assisting means must be provided. The assisting means may be a rope or any other means demonstrated to be suitable for the purpose. If the assisting means is a rope, or an approved device equivalent to a rope, it must be—

(1) Attached to the fuselage structure at or above the top of the emergency exit opening or, for a device at a pilot's emergency exit window, at another approved location if the stowed device, or its attachment, would reduce the pilot's view; and

(2) Able (with its attachment) to withstand a 400-pound static load.

6. Section 23.807 is amended by revising paragraphs (d) introductory text and (d)(1), and by adding paragraphs (d)(3), (d)(4), and (e) to read as follows:

§ 23.807 Emergency exits.

* * * * *

(d) *Doors and exits.* In addition, for commuter category airplanes, the following requirements apply:

(1) In addition to the passenger entry door—

(i) For an airplane with a total passenger seating capacity of 15 or fewer, an emergency exit, as defined in paragraph (b) of this section, is required on each side of the cabin; and

(ii) For an airplane with a total passenger seating capacity of 16 through 19, three emergency exits, as defined in paragraph (b) of this section, are required with one on the same side as the passenger entry door and two on the side opposite the door.

* * * * *

(3) Each required emergency exit, except floor level exits, must be located over the wing or, if not less than six feet from the ground, must be provided with an acceptable means to assist the occupants to descend to the ground. Emergency exits must be distributed as uniformly as practical, taking into account passenger seating configuration.

(4) Unless the applicant has complied with paragraph (d)(1) of this section, there must be an emergency exit on the side of the cabin opposite the passenger entry door, provided that—

(i) For an airplane having a passenger seating configuration of nine or fewer, the emergency exit has a rectangular opening measuring not less than 19 inches by 26 inches high with corner radii not greater than one-third the width of the exit, located over the wing, with a step up inside the airplane of not more than 29 inches and a step down outside the airplane of not more than 36 inches;

(ii) For an airplane having a passenger seating configuration of 10 to 19 passengers, the emergency exit has a rectangular opening measuring not less than 20 inches wide by 36 inches high, with corner radii not greater than one-third the width of the exit, and with a step up inside the airplane of not more than 20 inches. If the exit is located over the wing, the step down outside the airplane may not exceed 27 inches; and

(iii) The airplane complies with the additional requirements of §§ 23.561(b)(2)(iv), 23.803(b), 23.811(c), 23.812, 23.813(b), and 23.815.

(e) For multiengine airplanes, ditching emergency exits must be provided in accordance with the following requirements, unless the emergency exits required by paragraph (a) or (d) of this section already comply with them:

(1) One exit above the waterline on each side of the airplane having the dimensions specified in paragraph (b) or (d) of this section, as applicable; and

(2) If side exits cannot be above the waterline, there must be a readily accessible overhead hatch emergency exit that has a rectangular opening measuring not less than 20 inches wide by 36 inches long, with corner radii not greater than one-third the width of the exit.

7. Section 23.811 is amended by adding a new paragraph (c) to read as follows:

§ 23.811 Emergency exit marking.

* * * * *

(c) In addition, when certification to the emergency exit provisions of § 23.807(d)(4) is requested, the following apply:

(1) Each emergency exit, its means of access, and its means of opening, must be conspicuously marked;

(2) The identity and location of each emergency exit must be recognizable from a distance equal to the width of the cabin;

(3) Means must be provided to assist occupants in locating the emergency exits in conditions of dense smoke;

(4) The location of the operating handle and instructions for opening each emergency exit from inside the airplane must be shown by marking that is readable from a distance of 30 inches;

(5) Each passenger entry door operating handle must—

(i) Be self-illuminated with an initial brightness of at least 160 microlamberts; or

(ii) Be conspicuously located and well illuminated by the emergency lighting even in conditions of occupant crowding at the door;

(6) Each passenger entry door with a locking mechanism that is released by rotary motion of the handle must be marked—

(i) With a red arrow, with a shaft of at least three-fourths of an inch wide and a head twice the width of the shaft, extending along at least 70 degrees of arc at a radius approximately equal to three-fourths of the handle length;

(ii) So that the center line of the exit handle is within ± one inch of the projected point of the arrow when the handle has reached full travel and has released the locking mechanism;

(iii) With the word "open" in red letters, one inch high, placed horizontally near the head of the arrow; and

(7) In addition to the requirements of paragraph (a) of this section, the external marking of each emergency exit must—

(i) Include a 2-inch colorband outlining the exit; and

(ii) Have a color contrast that is readily distinguishable from the surrounding fuselage surface. The contrast must be such that if the reflectance of the darker color is 15 percent or less, the reflectance of the lighter color must be at least 45 percent. "Reflectance" is the ratio of the luminous flux reflected by a body to the luminous flux it receives. When the reflectance of the darker color is greater than 15 percent, at least a 30 percent difference between its reflectance and

the reflectance of the lighter color must be provided.

8. A new § 23.812 is added to read as follows:

§ 23.812 Emergency lighting.

When certification to the emergency exit provisions of § 23.807(d)(4) is requested, the following apply:

(a) An emergency lighting system, independent of the main cabin lighting system, must be installed. However, the source of general cabin illumination may be common to both the emergency and main lighting systems if the power supply to the emergency lighting system is independent of the power supply to the main lighting system.

(b) There must be a crew warning light that illuminates in the cockpit when power is on in the airplane and the emergency lighting control device is not armed.

(c) The emergency lights must be operable manually from the flightcrew station and be provided with automatic activation. The cockpit control device must have "on," "off," and "armed" positions so that, when armed in the cockpit, the lights will operate by automatic activation.

(d) There must be a means to safeguard against inadvertent operation of the cockpit control device from the "armed" or "on" positions.

(e) The cockpit control device must have provisions to allow the emergency lighting system to be armed or activated at any time that it may be needed.

(f) When armed, the emergency lighting system must activate and remain lighted when—

(1) The normal electrical power of the airplane is lost; or

(2) The airplane is subjected to an impact that results in a deceleration in excess of 2g and a velocity change in excess of 3.5 feet-per-second, acting along the longitudinal axis of the airplane; or

(3) Any other emergency condition exists where automatic activation of the emergency lighting is necessary to aid with occupant evacuation.

(g) The emergency lighting system must be capable of being turned off and reset by the flightcrew after automatic activation.

(h) The emergency lighting system must provide internal lighting, including—

(1) Illuminated emergency exit marking and locating signs, including those required in § 23.811(b);

(2) Sources of general illumination in the cabin that provide an average illumination of not less than 0.05 foot-candle and an illumination at any point of not less than 0.01 foot-candle when measured along the center line of the main passenger aisle(s) and at the seat armrest height; and

(3) Floor proximity emergency escape path marking that provides emergency evacuation guidance for the airplane occupants when all sources of illumination more than 4 feet above the cabin aisle floor are totally obscured.

(i) The energy supply to each emergency lighting unit must provide the required level of illumination for at least 10 minutes at the critical ambient conditions after activation of the emergency lighting system.

(j) If rechargeable batteries are used as the energy supply for the emergency lighting system, they may be recharged from the main electrical power system of the airplane provided the charging circuit is designed to preclude inadvertent battery discharge into the charging circuit faults. If the emergency lighting system does not include a charging circuit, battery condition monitors are required.

(k) Components of the emergency lighting system, including batteries, wiring, relays, lamps, and switches, must be capable of normal operation after being subjected to the inertia forces resulting from the ultimate load factors prescribed in § 23.561(b)(2).

(l) The emergency lighting system must be designed so that after any single transverse vertical separation of the fuselage during a crash landing:

(1) At least 75 percent of all electrically illuminated emergency lights required by this section remain operative; and

(2) Each electrically illuminated exit sign required by § 23.811 (b) and (c) remains operative, except those that are directly damaged by the fuselage separation.

9. Section 23.813 is amended by designating the existing text as paragraph (a), and by adding a new paragraph (b) to read as follows:

§ 23.813 Emergency exist access.

* * * * *

(b) In addition, when certification to the emergency exit provisions of § 23.807(d)(4) is requested, the following emergency exit access must be provided:

(1) The passageway leading from the aisle to the passenger entry door must be unobstructed and at least 20 inches wide.

(2) There must be enough space next to the passenger entry door to allow assistance in evacuation of passengers without reducing the unobstructed width of the passageway below 20 inches.

(3) If it is necessary to pass through a passageway between passenger compartments to reach a required emergency exit from any seat in the passenger cabin, the passageway must be unobstructed; however, curtains may be used if they allow free entry through the passageway.

(4) No door may be installed in any partition between passenger compartments unless that door has a means to latch it in the open position. The latching means must be able to withstand the loads imposed upon it by the door when the door is subjected to the inertia loads resulting from the ultimate static load factors prescribed in § 23.561(b)(2).

(5) If it is necessary to pass through a doorway separating the passenger cabin from other areas to reach a required emergency exit from any passenger seat, the door must have a means to latch it in the open position. The latching means must be able to withstand the loads imposed upon it by the door when the door is subjected to the inertia loads resulting from the ultimate static load factors prescribed in § 23.561(b)(2).

10. Section 23.815 is amended by designating the existing text as paragraph (a); by amending newly designated paragraph (a) by removing the word "For" and adding in its place the words "Except as provided in paragraph (b) of this section, for"; and by adding a new paragraph (b) to read as follows:

§ 23.815 Width of aisle.

* * * * *

(b) When certification to the emergency exist provisions of § 23.807(d)(4) is requested, the main passenger aisle width at any point between the seats must equal or exceed the following values:

Number of passenger seats	Minimum main passenger aisle width (inches)	
	Less than 25 inches from floor	25 inches and more from floor
10 or fewer	[1] 12	15
11 through 19 ...	12	20

[1] A narrower width not less than 9 inches may be approved when substantiated by tests found necessary by the Administrator.

[FR Doc. 94–11847 Filed 5–16–94; 8:45 am]

BILLING CODE 4910–13–M

Reader Aids

Federal Register

Vol. 59, No. 94

Tuesday, May 17, 1994

INFORMATION AND ASSISTANCE

Federal Register

Index, finding aids & general information	202–523–5227
Public inspection announcement line	523–5215
Corrections to published documents	523–5237
Document drafting information	523–3187
Machine readable documents	523–3447

Code of Federal Regulations

Index, finding aids & general information	523–5227
Printing schedules	523–3419

Laws

Public Laws Update Service (numbers, dates, etc.)	523–6641
Additional information	523–5230

Presidential Documents

Executive orders and proclamations	523–5230
Public Papers of the Presidents	523–5230
Weekly Compilation of Presidential Documents	523–5230

The United States Government Manual

General information	523–5230

Other Services

Data base and machine readable specifications	523–3447
Guide to Record Retention Requirements	523–3187
Legal staff	523–4534
Privacy Act Compilation	523–3187
Public Laws Update Service (PLUS)	523–6641
TDD for the hearing impaired	523–5229

ELECTRONIC BULLETIN BOARD

Free **Electronic Bulletin Board** service for Public Law numbers, Federal Register finding aids, and list of documents on public inspection. 202–275–0920

FAX-ON-DEMAND

The daily Federal Register Table of Contents and the list of documents on public inspection are available on the National Archives fax-on-demand system. There is no charge for the service except for long distance telephone charges the user may incur. 301–713–6905

FEDERAL REGISTER PAGES AND DATES, MAY

22491–22722.....2
22723–22950.....3
22951–23118.....4
23119–23610.....5
23611–23788.....6
23789–24028.....9
24029–24340.....10
24341–24630.....11
24631–24884.....12
24885–25286.....13
25287–25554.....16
25555–25774.....17

CFR PARTS AFFECTED DURING MAY

At the end of each month, the Office of the Federal Register publishes separately a List of CFR Sections Affected (LSA), which lists parts and sections affected by documents published since the revision date of each title.

3 CFR

Proclamations:
6569 (Revoked by Proc. 6685).....24337
6679.....22955
6680.....22957
6681.....22959
6682.....23611
6683.....24027
6684.....24335
6685.....24337
6686.....24627
6687.....24629
6688.....24883

Administrative Orders:
Memorandums:
April 29, 1994.....22951
April 29, 1994.....22953
Presidential Determinations:
94–23 of May 3, 1994.....24625

Executive Orders:
8685 (Revoked in part by PLO 7045).....24947
12582 (Revoked by EO 12913).....23115
12779 (See EO 12914).....24339
12866 (See OMB report of May 1).....24276
12878 (Amended by EO 12912).....22949
12912.....22949
12913.....23115
12914.....24339
1919½ (Revoked in part by PLO 7046).....24648
3406 (Revoked in part by PLO 7048).....24649

5 CFR

531.....24029
890.....24030

Proposed Rules:
Ch. XIV.....22537
185.....24661
213.....25966
630.....24560
890.....24062

7 CFR

58.....24318
91.....24318
93.....24318
94.....24318
95.....24318
98.....24318
210.....23613
220.....23613
271.....22723
272.....22723
273.....22723
301.....22491, 25287
723.....22723
958.....24631
982.....24632
998.....24633
1033.....24030
1036.....24030
1049.....24030
1240.....22492, 24217
1413.....22494, 22495
1427.....22494, 22495
1434.....23789
1464.....22723
1941.....22961
1943.....22961
1945.....22961
1948.....24635
1980.....23614

Proposed Rules:
Ch. VII.....22938
201.....25706
300.....22538, 24968
319.....22538, 24968
1230.....24971
1468.....22546
1530.....23017
1823.....23018
1910.....23018
1927.....24362
1941.....23018
1942.....23018
1943.....23018
1944.....22018
1945.....23018
1948.....23018
1951.....22548, 23018
1980.....23018, 23173
2812.....24973
4285.....23804

8 CFR

210a.....24031
299.....25555
499.....25555

Proposed Rules:
3.....24976, 24977
245a.....24978

9 CFR

78.....22496
92.....24885, 24886
94.....24637
317.....24220
381.....24220

Proposed Rules:
50.....23810
54.....24979
77.....23810
91.....24979
92.....23810
381.....22554

10 CFR

12 23119

Proposed Rules:

2 24371
26 24373
50 23641
51 23030
73 23641
170 24065
171 24065
451 24982

12 CFR

5 22497
207 23124
210 22962
220 23124
221 23124
224 23124
225 22967
230 24032
265 22967
563b 22725
575 22725
608 23615
612 24889
615 22735
1402 24638
1408 24899

Proposed Rules:

205 23031
230 ..... 24376, 24378
335 22555
563b 22764
575 22764
1403 24988

13 CFR

121 23131

14 CFR

23 ..... 23095, 25766
29 22499
39 ..... 23132, 23133, 23135, 23136, 23138, 23139, 23142, 23143, 23144, 23146, 23148, 23150, 23615, 23792, 24034, 25288, 25290, 25293, 25295
71 ..... 22502, 22503, 22736, 22737, 22969, 22970, 23617, 23618, 23619, 23620, 23621, 24036, 24037, 24038, 24341, 24343, 24344, 24349, 24906, 24908, 24910, 24911, 24912, 24914, 24915, 25297, 25299, 25300, 25301, 25302, 25561
91 ..... 24915, 25282, 25284
97 ..... 22738, 24916, 24918, 24919

Proposed Rules:

Ch. I 22565, 24092
25 ..... 22218, 22766
39 ..... 22565, 22769, 22771, 23031, 23174, 24382, 24383, 24670, 24671
71 ..... 22567, 22568, 22569, 22570, 23033, 23034, 23642, 24093, 24384, 24673, 24990
73 23644

15 CFR

7 22742
285 22742
290 22504
770 25303
771 25303
772 25303
773 25303
774 25303
775 25303
776 25303
778 25303
779 25303
785 25303
787 25303
799 25303
925 24586

16 CFR

305 ..... 23623, 25176

Proposed Rules:

300 23645
301 23645
303 23646
309 24013
455 23647
1700 24386

17 CFR

30 ..... 22505, 22971
200 23794

Proposed Rules:

1 25351
4 25351
30 25351
150 25351
240 22773

18 CFR

284 ..... 22753, 23624
381 25562

19 CFR

4 23794
10 25563
123 ..... 23794, 25563
145 25563
178 25563

Proposed Rules:

4 25376
101 23817

21 CFR

74 ..... 24643, 25322
101 ..... 24039, 24232
172 24923
178 25322
520 22753
606 23636
660 23636

Proposed Rules:

73 23035
74 23055
168 23055
172 23055
173 23055
182 23055
184 23055
878 23036

22 CFR

22 25324
41 25324

23 CFR

710 25326
712 25326
713 25326
720 25326

Proposed Rules:

250 25377
645 25579

24 CFR

92 22506
582 24252
583 24252
880 ..... 22754, 22916
881 ..... 22754, 22916
882 24252
883 ..... 22754, 22916
884 22916
886 22916
888 25703

25 CFR

Proposed Rules:

Ch. I 23774
35 24850
200 24850
280 24850
291 24850
510 24850
511 24850
570 24850
577 24850
578 24850
579 24850
882 24850
885 24850
886 24850
887 24850
890 24850
905 24850
941 24850
961 24850
965 24850
968 24850

26 CFR

1 ..... 24039, 24350, 24924, 24935, 25581, 25584
25 23152
602 ..... 23152, 24935

Proposed Rules:

1 ..... 22773, 24094, 24095, 24992, 25581, 25584
31 24096

28 CFR

0 23637
527 23998

29 CFR

2619 24939
2676 24939

Proposed Rules:

570 ..... 25164, 25167
1609 24998
1926 24389

30 CFR

935 22507

Proposed Rules:

250 25377
906 24998
914 23176
915 23177
917 23649
944 24675
950 22571

31 CFR

47 24047
565 24643
601 22972

32 CFR

706 22755

Proposed Rules:

298 23649

33 CFR

100 24942
117 23158
150 23095
165 ..... 23158, 24047, 24048, 25328
166 23774

Proposed Rules:

100 22573
165 23179
181 23651
402 23180

34 CFR

75 24868
668 23095
682 25744
693 24868

Proposed Rules:

Ch. VI 22775, 22776
364 24814
365 24814
366 24814
367 24814
388 24000

36 CFR

1253 23637

Proposed Rules:

7 25001
222 25385

37 CFR

251 23964
252 23964
253 23964
254 23964
255 23964
256 23964
257 23964
258 23964
259 23964
301 23964
302 23964
303 23964
304 23964
305 23964
306 23964
307 23964
308 23964
309 23964
310 23964
311 23964

38 CFR

3 ..... 25328, 25329
20 25330
21 ..... 24049, 24050

39 CFR

20 24943
111 ..... 23038, 23158
265 22756

40 CFR

52 ..... 22757, 22973, 23164, 23167, 23796, 24054, 24644, 24647, 25330, 25333, 25572
55 24351
60 ..... 22758, 22759

180.....24055, 24057, 24059
185.....23799, 24059
186.....24059
712.....22519
716.....22519

Proposed Rules:
52.....22776, 23264, 24096, 24096, 24330, 25002
59.....22776
63.....25004, 25387
65.....22795
80.....22800, 25586
81.....23264, 24330, 25588
90.....25399
165.....2257
180.....24100, 24101, 25431, 25586
261.....24530
271.....24530
281.....25588
300.....23819
302.....24530
721.....23041
745.....23041

41 CFR

302–11.....22519

42 CFR

Proposed Rules:
434.....23820
435.....23820

43 CFR

7041.....23638

Public Land Orders:
219 (Revoked by PLO 7046).....24648
1094 (Revoked in part by PLO 7050).....25339
1703 (Revoked in part by PLO 7049).....25338
4825 (Revoked in part by PLO 7047).....24648
7042.....24945
7043.....24946
7044.....24946
7045.....24947
7046.....24648
7047.....24648
7048.....24649
7049.....24338
7050.....25339

Proposed Rules:
11.....23098
1780.....25385
3720.....24572
3730.....24572
3800.....24572
3810.....24572
3820.....24572
3830.....24572
3850.....24572
4100.....25385

44 CFR

64.....24649, 24652
206.....24355
311.....24947

45 CFR

Proposed Rules:
98.....24510
255.....24510
256.....24510
257.....24510

46 CFR

67.....24060

Proposed Rules:
381.....24390
540.....23182

47 CFR

Chapter I.....25589
0.....24947
1.....22980, 24947
15.....25339
73.....22995, 22996
76.....25339, 25344
95.....24947

Proposed Rules:
1.....23042, 23183, 24103
20.....25432
73.....22814, 23042, 23043, 23183, 23184
76.....23183

48 CFR

217.....22759
219.....24958
225.....23169
252.....24958
533.....22520
904.....24357
905.....24357
914.....24357
915.....24357
917.....24357
919.....24357
936.....24357
943.....24357
952.....24357
970.....24357
1804.....23800
1816.....22521
1831.....22521
1842.....23800
1843.....23802
1852.....22521, 23800

Proposed Rules:
32.....23776
52.....23776
1807.....24104
1815.....24104

49 CFR

229.....24960
393.....25572
526.....25574
571.....22997, 25576

Proposed Rules:
571.....23184, 23662, 25590
580.....23186

50 CFR

17.....24654
36.....24564
217.....23169
227.....23169
301.....22522, 24359, 24964
638.....25344
641.....22760
651.....22760
658.....24660
661.....22999, 23013
663.....23638
672.....24965
675.....22762, 23172, 24360, 24361, 24965, 25346
678.....25350

Proposed Rules:
17.....23824, 24106, 24112, 24117, 24678, 25024
36.....23043, 24567
215.....25024
261.....23095
262.....23095
263.....23095
267.....23095
301.....23664
638.....24679
642.....23681
651.....24118, 25026
671.....23664, 24679
672.....23044, 23664, 24679
675.....23044, 23664, 24679
676.....23664, 24679, 24680
677.....23664

LIST OF PUBLIC LAWS

Note: No public bills which have become law were received by the Office of the Federal Register for inclusion in today's **List of Public Laws.**

Last List May 16, 1994

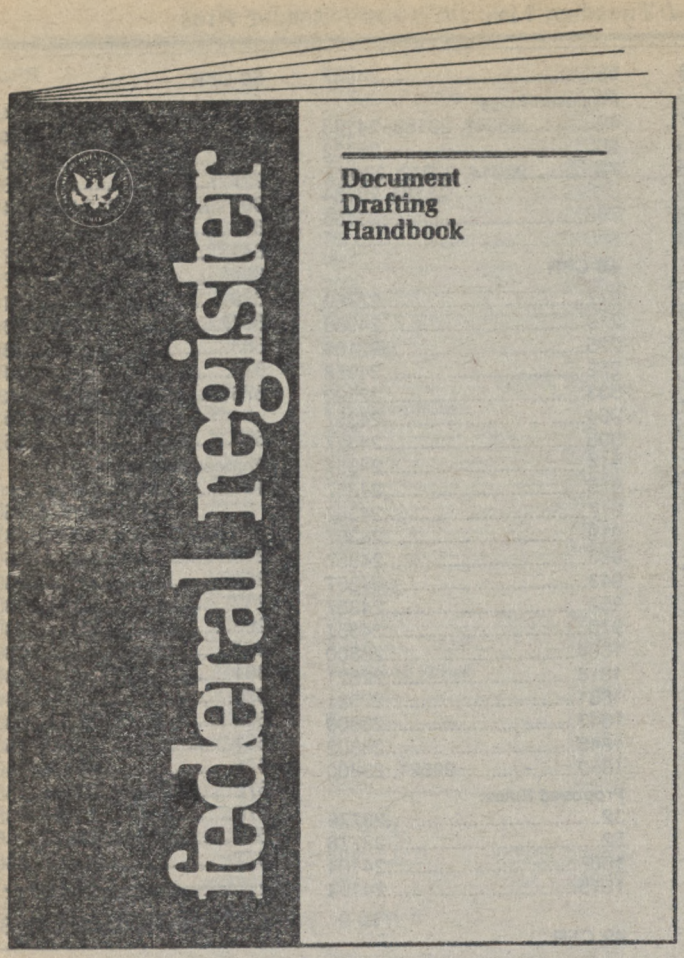

Federal Register Document Drafting Handbook

A Handbook for Regulation Drafters

This handbook is designed to help Federal agencies prepare documents for publication in the Federal Register. The updated requirements in the handbook reflect recent changes in regulatory development procedures, document format, and printing technology.

Price $5.50

Superintendent of Documents Publication Order Form

Order processing code: *6133

Charge your order. It's easy!

To fax your orders and inquiries—(202) 512-2250

☐ **YES,** please send me the following indicated publications:

_____ copies of **DOCUMENT DRAFTING HANDBOOK at $5.50 each.** S/N 069–000–00037–1

1. The total cost of my order is $_____ Foreign orders please add an additional 25%. All prices include regular domestic postage and handling and are subject to change.

Please Type or Print

2. _____
(Company or personal name)

_____
(Additional address/attention line)

_____
(Street address)

_____
(City, State, ZIP Code)

(_____) _____
(Daytime phone including area code)

3. Please choose method of payment:

☐ Check payable to the Superintendent of Documents

☐ GPO Deposit Account ☐☐☐☐☐☐☐–☐

☐ VISA or MasterCard Account

☐☐☐☐☐☐☐☐☐☐☐☐☐☐☐☐

_____
(Credit card expiration date)

Thank you for your order!

_____
(Signature)

(Rev 12/91)

4. **Mail To:** New Orders, Superintendent of Documents, P.O. Box 371954, Pittsburgh, PA 15250–7954



Printed on recycled paper