AUTHENTICATED
U.S. GOVERNMENT
INFORMATION
GPO

9–1–93
Vol. 58 No. 168

federal register

Wednesday
September 1, 1993

United States
Government
Printing Office
SUPERINTENDENT
OF DOCUMENTS
Washington, DC 20402

OFFICIAL BUSINESS
Penalty for private use, $300

SECOND CLASS NEWSPAPER

Postage and Fees Paid
U.S. Government Printing Office
(ISSN 0097–6326)

Vol. 58 No. 168
Pages 46073–46528

federal register

Wednesday
September 1, 1993

Briefings on How To Use the Federal Register
For information on briefings in Atlanta, GA, and Washington, DC, see announcement on the inside cover of this issue.

FEDERAL REGISTER Published daily, Monday through Friday, (not published on Saturdays, Sundays, or on official holidays), by the Office of the Federal Register, National Archives and Records Administration, Washington, DC 20408, under the Federal Register Act (49 Stat. 500, as amended; 44 U.S.C. Ch. 15) and the regulations of the Administrative Committee of the Federal Register (1 CFR Ch. I). Distribution is made only by the Superintendent of Documents, U.S. Government Printing Office, Washington, DC 20402.

The **Federal Register** provides a uniform system for making available to the public regulations and legal notices issued by Federal agencies. These include Presidential proclamations and Executive Orders and Federal agency documents having general applicability and legal effect, documents required to be published by act of Congress and other Federal agency documents of public interest. Documents are on file for public inspection in the Office of the Federal Register the day before they are published, unless earlier filing is requested by the issuing agency.

The seal of the National Archives and Records Administration authenticates this issue of the **Federal Register** as the official serial publication established under the Federal Register Act. 44 U.S.C. 1507 provides that the contents of the **Federal Register** shall be judicially noticed.

The **Federal Register** is published in paper, 24x microfiche format and magnetic tape. The annual subscription price for the **Federal Register** paper edition is $375, or $415 for a combined **Federal Register**, Federal Register Index and List of CFR Sections Affected (LSA) subscription; the microfiche edition of the **Federal Register** including the Federal Register Index and LSA is $353; and magnetic tape is $37,500. Six month subscriptions are available for one-half the annual rate. The charge for individual copies in paper form is $4.50 for each issue, or $4.50 for each group of pages as actually bound; or $1.50 for each issue in microfiche form; or $175.00 per magnetic tape. All prices include regular domestic postage and handling. International customers please add 25% for foreign handling. Remit check or money order, made payable to the Superintendent of Documents, or charge to your GPO Deposit Account, VISA or MasterCard. Mail to: New Orders, Superintendent of Documents, P.O. Box 371954, Pittsburgh, PA 15250–7954.

There are no restrictions on the republication of material appearing in the **Federal Register.**

How To Cite This Publication: Use the volume number and the page number. Example: 58 FR 12345.

SUBSCRIPTIONS AND COPIES

PUBLIC	
Subscriptions:	
Paper or fiche	**202–783–3238**
Magnetic tapes	**512–1530**
Problems with public subscriptions	**512–2303**
Single copies/back copies:	
Paper or fiche	**783–3238**
Magnetic tapes	**512–1530**
Problems with public single copies	**512–2457**
FEDERAL AGENCIES	
Subscriptions:	
Paper or fiche	**523–5243**
Magnetic tapes	**512–1530**
Problems with Federal agency subscriptions	**523–5243**

For other telephone numbers, see the Reader Aids section at the end of this issue.

THE FEDERAL REGISTER
WHAT IT IS AND HOW TO USE IT

FOR: Any person who uses the Federal Register and Code of Federal Regulations.

WHO: The Office of the Federal Register.

WHAT: Free public briefings (approximately 3 hours) to present:
1. The regulatory process, with a focus on the Federal Register system and the public's role in the development of regulations.
2. The relationship between the Federal Register and Code of Federal Regulations.
3. The important elements of typical Federal Register documents.
4. An introduction to the finding aids of the FR/CFR system.

WHY: To provide the public with access to information necessary to research Federal agency regulations which directly affect them. There will be no discussion of specific agency regulations.

ATLANTA, GA

When: September 15 at 9:30 a.m.
Where: Jimmy Carter Presidential Library
One Copenhill Avenue, Atlanta, GA
Reservations: Federal Information Center
1–800–347–1997

WASHINGTON, DC
(two briefings)

When: September 17 at 9:00 am and 1:30 pm
Where: Office of the Federal Register, 7th Floor Conference Room, 800 North Capitol Street NW, Washington, DC (3 blocks north of Union Station Metro)
Reservations: 202–523–4538

Printed on recycled paper containing 100% post consumer waste

Contents

Federal Register
Vol. 58, No. 168
Wednesday, September 1, 1993

Agency for Toxic Substances and Disease Registry
NOTICES
Superfund program:
Hazardous substances priority list (toxicological profiles), 46196

Agriculture Department
See Farmers Home Administration
See Federal Crop Insurance Corporation
See Federal Grain Inspection Service
See Forest Service
See Rural Electrification Administration
See Soil Conservation Service
NOTICES
Agency information collection activities under OMB review, 45156

Alcohol, Tobacco and Firearms Bureau
PROPOSED RULES
Alcoholic beverages:
Distilled spirits, labeling and advertising—
Vodka, 46141

Arts and Humanities, National Foundation
See National Foundation on the Arts and the Humanities

Children and Families Administration
NOTICES
Agency information collection activities under OMB review, 46195
Federal financial participation in State assistance expenditures; Federal percentages and Federal medical assistance percentages; correction, 46196

Coast Guard
RULES
Drawbridge operations:
Operation requirements; temporary deviations, 46080
Ports and waterways safety:
Cape Fear River, Wilmington, NC; safety zone, 46082
New York Harbor, NY; Vessel Traffic Service New York (VTSNY) boundary expansion, 46081
Safety and security zones, etc.; list of temporary rules, 46078
Upper Mississippi River Basin; safety zone, 46083
PROPOSED RULES
Ports and waterways safety:
Inland waterways navigation regulations—
Ambrose Channel, NY; deletion, 46144

Commerce Department
See Economic Development Administration
See Economics and Statistics Administration
See Export Administration Bureau
See International Trade Administration
See National Oceanic and Atmospheric Administration
See National Telecommunications and Information Administration
NOTICES
Agency information collection activities under OMB review, 46160

Committee for the Implementation of Textile Agreements
NOTICES
Cotton, wool, and man-made textiles:
China, 46162

Customs Service
NOTICES
Trade name recordation applications:
Dovex Inc., 46267

Defense Department
RULES
Acquisition regulations:
Incremental funding of fixed-price contracts, 46091

Drug Enforcement Administration
NOTICES
Applications, hearings, determinations, etc.:
Cambridge Isotope Lab, 46216
Johnson Matthey, Inc., 46216
Stepan Co., 46217

Economic Development Administration
NOTICES
Senior Executive Service:
Performance Review Board; membership, 46161

Economics and Statistics Administration
NOTICES
Senior Executive Service:
Performance Review Board; membership, 46161

Energy Department
See Energy Efficiency and Renewable Energy Office
See Federal Energy Regulatory Commission
See Hearings and Appeals Office, Energy Department
NOTICES
Meetings:
Environmental Restoration and Waste Management Advisory Committee, 46167
Hydrogen Technical Advisory Panel, 46168

Energy Efficiency and Renewable Energy Office
NOTICES
Consumer product test procedures; waiver petitions:
Ducane Co. Inc., 46170
Lennox Industries Inc., 46172

Environmental Protection Agency
RULES
Air programs; fuel and fuel additives:
South Carolina; gasoline and alcohol blends; Federal Reid Vapor Pressure (RVP) volatility standard, 46508
Pesticides; tolerances in food, animal feeds, and raw agricultural commodities:
Beta-(4-chlorophenoxy)-alpha-(1,1-dimethylethyl)-1H-1,2,4-triazole-1-ethanol, 46084
Toxaphene, 46087
Superfund program:
National oil and hazardous substances contingency plan—
National priorities list update, 46087

PROPOSED RULES
Pesticides; tolerances in food, animal feeds, and raw agricultural commodities:
Dimethoate, 46147
Phorate, 46149
Water pollution control:
National pollutant discharge elimination system; State programs—
South Dakota, 46145
NOTICES
Agency information collection activities under OMB review, 46189
Air quality; prevention of significant deterioration (PSD):
Permit determinations, etc.—
Region II, 46189
Clean Water Act:
Section 404 permit program; dredged or fill material discharge—
New Jersey, 46190
Meetings:
Clean Air Act Advisory Committee, 46190
Environmental Policy and Technology National Advisory Council, 46190
Pesticide registration, cancellation, etc.:
Silver and Biobor, 46192
Pesticides; experimental use permits, etc.:
American Cyanamid Co. et al., 46191

Export Administration Bureau
NOTICES
Foreign availability assessments:
Digital computers, 46160

Family Support Administration
See Refugee Resettlement Office

Farmers Home Administration
RULES
Program regulations:
Personal property—
Chattel security; servicing and liquidation, 46074

Federal Aviation Administration
RULES
Air carrier certification and operations:
Protective breathing equipment training, 46500
Airworthiness directives:
Boeing, 46076
PROPOSED RULES
Airworthiness directives:
Beech, 46135
Fokker, 46136, 46139
Israel Aircraft Industries Ltd., 46137

Federal Communications Commission
RULES
Radio stations; table of assignments:
Alaska et al., 46090
Oregon, 46090
PROPOSED RULES
Radio stations; table of assignments:
California, 46152
New York, 46152
Television stations; table of assignments:
Florida, 46152
NOTICES
Rulemaking proceedings; petitions filed, granted, denied, etc., 46193
Telecommunications between United States and Cuba; applicant criteria, 46193

Federal Crop Insurance Corporation
RULES
Crop insurance; various commodities:
Nursery crop, 46073

Federal Emergency Management Agency
NOTICES
Disaster and emergency areas:
Illinois, 46195
Kansas, 46194
Missouri, 46195
Wisconsin, 46195

Federal Energy Regulatory Commission
NOTICES
Electric rate, small power production, and interlocking directorate filings, etc.:
Montana Power Co. et al., 46163
Natural gas certificate filings:
Arkla Energy Resources Co. et al., 46164
Applications, hearings, determinations, etc.:
ANR Pipeline Co., 46165
Chanute, KS, et al., 46165
Tennessee Gas Pipeline Co., 46166
Transcontinental Gas Pipe Line Corp., 46166
United Gas Pipe Line Co., 46167
U-T Offshore System, 46167

Federal Grain Inspection Service
NOTICES
Agency designation actions:
Alabama, 46156
Illinois et al., 46157
Iowa et al., 46157

Federal Highway Administration
NOTICES
Meetings:
Intelligent Vehicle-Highway Society of America, 46264

Federal Railroad Administration
NOTICES
Exemption petitions, etc.:
Union Pacific Railroad Co., 46264

Federal Reserve System
RULES
International banking operations (Regulation K):
Foreign Bank Supervision Enhancement Act; implementation; correction, 46076
NOTICES
Applications, hearings, determinations, etc.:
Boyd, Daniel Marcus, III, et al.; correction, 46195

Fish and Wildlife Service
NOTICES
Endangered and threatened species permit applications, 46212

Food and Drug Administration
RULES
Medical devices:
Device user facilities and distributors; death, illness, and serious injury reporting requirements, 46514
Comment opportunity, 46514

NOTICES
Medical devices; premarket approval:
Reality Female Condom, 46197
Wesley-Jessen HS-16 Cleaning Solution, 46197

Forest Service
NOTICES
Appeal exemptions; timber sales:
Jefferson National Forest, VA, 46157
Targhee National Forest, ID, 46158, 46159

General Services Administration
RULES
Federal property management:
Utilization, donation, and disposal of foreign gifts and decorations—
"Minimal value" definition, 46088

Government Ethics Office
PROPOSED RULES
Executive Branch employees; financial disclosure, qualified trusts, and divestiture certificates, 46096

Health and Human Services Department
See Agency for Toxic Substances and Disease Registry
See Children and Families Administration
See Food and Drug Administration
See Health Care Financing Administration
See National Institutes of Health
See Refugee Resettlement Office

Health Care Financing Administration
RULES
Medicare:
Hospital inpatient prospective payment systems and 1994 FY rates, 46270
NOTICES
Agency information collection activities under OMB review, 46198
Medicaid and medicare:
Program issuances and coverage decisions; quarterly listing, 46200

Hearings and Appeals Office, Energy Department
NOTICES
Cases filed, 46169, 46174
Decisions and orders, 46170, 46174, 46177, 46180
Special refund procedures; implementation, 46181, 46186

Housing and Urban Development Department
NOTICES
Grant and cooperative agreement awards:
Low and moderate-income private housing; lead-based paint abatement, 46209
Grants and cooperative agreements; availability, etc.:
HOPE homeownership program—
Public and Indian housing, multifamily units, and single family homes programs (HOPE 1, 2 & 3), 46209
HUD-owned single family properties leasing to State and local governments for law enforcement use, 46526

Interior Department
See Fish and Wildlife Service
See Land Management Bureau

Internal Revenue Service
NOTICES
Facilities, programs, policies and practices; accommodation of individuals with disabilities; evaluation, 46267

International Trade Administration
NOTICES
Export trade certificates of review, 46161

International Trade Commission
NOTICES
Import investigations:
Integrated circuit devices, processes for making same, components, and products containing same, 46213
Stainless steel flanges from—
India et al., 46212

Justice Department
See Drug Enforcement Administration
NOTICES
Agency information collection activities under OMB review, 46214
Pollution control; consent judgments:
Archer Rubber Co., 46215
Nautilus Motor Tanker Co., Ltd., 46216
United Technologies Corp., 46215

Labor Department
See Mine Safety and Health Administration
NOTICES
Agency information collection activities under OMB review, 46217

Land Management Bureau
PROPOSED RULES
Recreation management:
Ukiah District, CA; occupancy and camping stay limits, 46151
NOTICES
Environmental statements; availability, etc.:
North Umpqua Resource Area et al., OR, 46210
Motor vehicle use restrictions:
Colorado, 46211
Oil and gas leases:
Montana, 46211

Mine Safety and Health Administration
NOTICES
Safety standard petitions:
Baylor Rush, Inc., et al., 46218

National Capital Planning Commission
NOTICES
Senior Executive Service:
Performance Review Board; membership, 46222

National Foundation on the Arts and the Humanities
NOTICES
Meetings:
Dance Program Dance Heritage Study Group, 46222

National Institutes of Health
NOTICES
Meetings:
National Heart, Lung, and Blood Institute, 46208
National Institute on Aging, 46208

National Oceanic and Atmospheric Administration
RULES
Fishery conservation and management:
Gulf of Alaska groundfish, 46095
Ocean salmon off coasts of Washington, Oregon, and California, 46093
Pacific Coast groundfish, 46094
PROPOSED RULES
Atlantic shark, tuna, and swordfish fisheries; issues; meetings, 46153

National Telecommunications and Information Administration
NOTICES
Senior Executive Service:
Performance Review Board; membership, 46162

Nuclear Regulatory Commission
NOTICES
Meetings:
Reactor Safeguards Advisory Committee, 46248
Operating licenses, amendments; no significant hazards considerations; biweekly notices, 46222
Petitions; Director's decisions:
Northeast Utilities, 46249
Applications, hearings, determinations, etc.:
Babcock & Wilcox, 46252
Connecticut Yankee Atomic Power Co., 46249
North Atlantic Energy Service Corp., 46256
Public Service Electric & Gas Co., 46250

Public Health Service
See Agency for Toxic Substances and Disease Registry
See Food and Drug Administration
See National Institutes of Health

Refugee Resettlement Office
RULES
Refugee resettlement program:
Cash and medical assistance, 46089

Rural Electrification Administration
PROPOSED RULES
Telecommunications standards and specifications:
Filled fiber optic cables, specification, 46097
Outside plant housings and serving area interface systems; specification, 46110

Securities and Exchange Commission
NOTICES
Self-regulatory organizations; proposed rule changes:
New York Stock Exchange, Inc., 46260
Philadelphia Stock Exchange, Inc., 46263
Applications, hearings, determinations, etc.:
American Capital Comstock Fund, Inc., et al., 46256, 46257
Colonial Advanced Strategies Gold Trust, 46260

Soil Conservation Service
NOTICES
Environmental statements; availability, etc.:
Cedar Run Watershed, VA, 46159

State Department
NOTICES
Senior Executive Service:
Performance Review Board; membership, 46264

Textile Agreements Implementation Committee
See Committee for the Implementation of Textile Agreements

Toxic Substances and Disease Registry Agency
See Agency for Toxic Substances and Disease Registry

Transportation Department
See Coast Guard
See Federal Aviation Administration
See Federal Highway Administration
See Federal Railroad Administration

Treasury Department
See Alcohol, Tobacco and Firearms Bureau
See Customs Service
See Internal Revenue Service
NOTICES
Agency information collection activities under OMB review, 46265, 46266

Separate Parts In This Issue

Part II
Department of Health and Human Services, Health Care Financing Administration, 46270

Part III
Department of Transportation, Federal Aviation Administration, 46500

Part IV
Environmental Protection Agency, 46508

Part V
Department of Health and Human Services, Food and Drug Administration, 46514

Part VI
Department of Housing and Urban Development, 46526

Reader Aids
Additional information, including a list of public laws, telephone numbers, and finding aids, appears in the Reader Aids section at the end of this issue.

Electronic Bulletin Board
Free Electronic Bulletin Board service for Public Law numbers, Federal Register finding aids, and a list of Clinton Administration officials is available on 202–275–1538 or 275–0920.

CFR PARTS AFFECTED IN THIS ISSUE

A cumulative list of the parts affected this month can be found in the Reader Aids section at the end of this issue.

5 CFR

Proposed Rules:
2634.....46096

7 CFR
406.....46073
1962.....46074

Proposed Rules:
1755 (2 documents).....46097, 46110

12 CFR
211.....46076

14 CFR
39.....46076
121.....46500

Proposed Rules:
39 (4 documents).....46135, 46136, 46137, 46139

21 CFR
804 (2 documents).....46514
807 (2 documents).....46514

27 CFR

Proposed Rules:
5.....46141

33 CFR
100.....46078
117.....46080
161.....46081
165 (3 documents).....46078, 46082, 46083

Proposed Rules:
162.....46144

40 CFR
80.....46508
180 (2 documents).....46084, 46087
185.....46087
300.....46087

Proposed Rules:
123.....46145
180 (2 documents).....46147, 46149

41 CFR
101-49.....46088

42 CFR
412.....46270
413.....46270

43 CFR

Proposed Rules:
8360.....46151

45 CFR
400.....46089

47 CFR
73 (2 documents).....46090

Proposed Rules:
73 (3 documents).....46152

48 CFR
232.....46091
252.....46091

50 CFR
661.....46093
663.....46094
672.....46095

Proposed Rules:
285.....46153
630.....46153
678.....46153

Rules and Regulations

Federal Register
Vol. 58, No. 168
Wednesday, September 1, 1993

This section of the FEDERAL REGISTER contains regulatory documents having general applicability and legal effect, most of which are keyed to and codified in the Code of Federal Regulations, which is published under 50 titles pursuant to 44 U.S.C. 1510.

The Code of Federal Regulations is sold by the Superintendent of Documents. Prices of new books are listed in the first FEDERAL REGISTER issue of each week.

DEPARTMENT OF AGRICULTURE

Federal Crop Insurance Corporation

7 CFR Part 406

Nursery Crop Insurance Regulations

AGENCY: Federal Crop Insurance Corporation, USDA.

ACTION: Interim rule.

SUMMARY: The Federal Crop Insurance Corporation (FCIC) amends the Nursery Crop Insurance regulations effective for the 1994 crop year only, by allowing a six month delay in the payment of premiums. The intended effect of this rule is to provide temporary relief to farmer who suffered damages as a result of Hurricane Andrew. The premium billing date will be extended for up to six months from September 30, 1993 to March 31, 1994 for, Collier, Dade, Lee, and Palm Beach Counties, Florida; and Acadia, Avoyelles, Evangeline, Iberia, Iberville, Lafayette, Point Coupee, Rapides, St. Landry, St. Martin, Vermilion, and West Baton Rouge Parishes, Louisiana.

EFFECTIVE DATE: September 1, 1993.

FOR FURTHER INFORMATION CONTACT: Mari L. Dunleavy, Regulatory and Procedural Development, Federal Crop Insurance Corporation, U.S. Department of Agriculture, Washington, DC 20250, telephone (202) 254–8314.

SUPPLEMENTARY INFORMATION: This action has been reviewed under USDA procedures established by Departmental Regulation 1512–1. This action does not constitute a review as to the need, currency, clarity, and effectiveness of the regulations affected by this rule under those procedures. The sunset review date established for these regulations is October 1, 1993.

Kathleen Connelly, Acting Manager, FCIC, has determined that this action is not a major rule as defined by Executive Order 12291 because it will not result in: (a) An annual effect on the economy of $100 million or more; (b) major increases in costs or prices for consumers, individual industries, federal, state, or local governments, or a geographical region; or (c) significant adverse effects on competition, employment, investment, productivity, innovation, or the ability of U.S.-based enterprises to compete with foreign-based enterprises in domestic or export markets.

Kathleen Connelly also certifies that this action will not increase the federal paperwork burden for individuals, small businesses, and other persons. The action will not have a significant economic effect on a substantial number of small entities, or the producers served by this voluntary crop insurance program because this action liberalizes the terms of the nursery crop insurance contract. Further, this action does not impose an additional burden on the reinsured company or sales and service contractor because FCIC will administratively extend the date when necessary to be consistent with the final date the insured is required to submit premium payment. Therefore, this action is determined to be exempt from the provisions of the Regulatory Flexibility Act and no Regulatory Flexibility Analysis was prepared.

This program is listed in the Catalog of Federal Domestic Assistance under No. 10 450.

This program is not subject to the provisions of Executive Order 12372 which requires intergovernmental consultation with state and local officials. See the notice related to 7 CFR part 3015, subpart V, published at 48 FR 29115, June 24, 1983.

This action is not expected to have any significant impact on the quality of the human environment, health, and safety. Therefore, neither an Environmental Assessment nor an Environmental Impact Statement is needed.

This amendment does not contain information collections that require clearance by the Office of Management and Budget under the provisions of 44 U.S.C. chapter 35, the Paperwork Reduction Act.

The Office of General Counsel, as the Designated Official under section 6(a) of Executive Order 12612, Federalism, has determined that the policies and procedures contained in this interim rule will not have an increased substantial direct effect on states or their political subdivisions, or on the distribution of power and responsibilities among the various levels of government.

This rule has been reviewed in accordance with Executive Order 12778. The provisions of this interim rule are not retroactive and will preempt state and local laws to the extent such state and local laws are inconsistent herewith. The administrative appeal provisions located at 7 CFR part 400, subpart J must be exhausted before judicial action may be brought for actions taken under proceedings for the imposition of civil penalties or under the Program Fraud Civil Remedies sections of these regulations.

Background

On Friday, November 30, 1992, FCIC published an interim rule at 57 FR 54682 which allowed a six month extension in the payment of premiums applicable to nursery crop insurance holders in identified counties in Louisiana and Florida adversely affected by Hurricane Andrew. Although those insureds were afforded temporary financial relief through this deferment, FCIC has determined that it is necessary to extend further financial relief to the insureds.

The devastation of Hurricane Andrew in certain counties in Florida and Louisiana is still adversely affecting the financial situation of nursery crop insurance policy holders in those areas. Requiring those policyholders to pay timely premium on the nursery policies will only exacerbate their economic difficulties. Therefore, FCIC intends to help relieve their financial burden by changing the date by which nursery premiums are due. The insurance premium for nursery crop insurance in certain counties will be changed from September 30, 1993 to March 31, 1994, for the 1994 crop year only.

Because this amendment serves to relieve a restriction, FCIC determines that notice and public procedure is unnecessary, impracticable, and contrary to the public interest. This rule is effective upon publication.

FCIC is soliciting written public comment on this interim rule for 60 days following its publication. Written comments should be addressed to Mari L. Dunleavy, Federal Crop Insurance Corporation, USDA, Washington, DC,

20250. This rule will be scheduled for review so that any amendment made necessary by such public comment may be published as quickly as possible.

Written comments received pursuant to this rule will be made available for public inspection and copying in suite 500, 2101 L Street NW., Washington, DC during regular business hours, Monday through Friday.

List of Subjects in 7 CFR Part 406

Crop Insurance, Nursery, Premium deferred.

Interim Rule

Accordingly, pursuant to the authority contained in the Federal Crop Insurance Act, as amended (7 U.S.C. 1501 *et seq.*), the Federal Crop Insurance Corporation hereby amends the Nursery Crop Insurance Regulations (7 CFR 406) effective for the 1994 crop year only, by amending the provisions for coverage. This rule amends the regulations set forth herein in the following instances:

1. The authority citation for 7 CFR part 406 continues to read as follows:

Authority: 7 U.S.C. 1506, 1516.

2. Section 406.7 is amended in the contract, by revising subsections 5.a. and b. to read as follows:

§ 406.7 The application and policy.

* * * * *

5. Annual Premium.

a. The annual premium is due and payable on or before September 30 preceding each crop year and will be earned in full when the policy becomes effective.

For the 1993 and 1994 crop year only, the date for payment of the premium will be deferred until March 31, 1994, for Broward, Collier, Dade, Lee, and Palm Beach Counties, Florida; and Acadia, Avoyelles, Evangeline, Iberia, Iberville, Lafayette, Point Coupee, Rapides, St. Landry, St. Martin, Vermilion, and West Baton Rouge Parishes, Louisiana.

b. Except for the 1993 and 1994 crop years, coverage will not begin if the premium due under this policy is not paid when due and payable. For the 1993 and 1994 crop year only insurance will attach on October 1, preceding the crop year.

* * * * *

Done in Washington, DC, on August 10, 1993.

Kathleen Connelly,

Acting Manager, Federal Crop Insurance Corporation.

[FR Doc. 93–21124 Filed 8–31–93; 8:45 am]

BILLING CODE 3410–08–M

Farmers Home Administration

7 CFR Part 1962

RIN 0575–AB61

Servicing and Liquidation of Chattel Security

AGENCY: Farmers Home Administration, USDA.

ACTION: Final rule.

SUMMARY: The Farmers Home Administration (FmHA) is revising its regulations to clearly identify the type of security that can be routinely sold and proceeds used to pay for essential family living and farm operating expenses. The term "security" presently used in FmHA regulations has been occasionally misinterpreted to mean basic security. This revision is needed to clarify the term "security" and make FmHA regulations internally consistent in identifying the distinction between normal income security and basic security. The regulation is also revised to clarify that any changes in the disposition of both normal income security and basic security requires an update of the information, which is to be supplied by the borrower, on the Farm and Home Plan and Form FmHA 1962–1. The intended effects of these changes is to provide clarification of the term "security", and to ensure uniform implementation of the Agency's policy in the disposal and the release of chattel security.

EFFECTIVE DATE: September 1, 1993.

FOR FURTHER INFORMATION CONTACT: Charles W. Thompson, Senior Loan Officer, Farmer Programs Loan Servicing and Property Management Division, Farmers Home Administration, USDA, room 5441–S, 14th Street and Independence Avenue SW., Washington, DC 20250, telephone, 202–690–0431.

SUPPLEMENTARY INFORMATION: This rule has been reviewed under USDA procedures established in Departmental Regulation 1512 which implements Executive Order 12291, and has been determined to be exempt from those requirements because it involves an interpretation of statute and FmHA's regulations. This administrative action is an interpretation of § 335(f) of the CONACT which clarifies the regulations so that the uses of proceeds, from the sale of both normal income security and basic security, will not be misinterpreted and will be handled consistently for every borrower. It is the policy of this Department to publish for comment rules relating to public property, loans, grants, benefits, or contracts, notwithstanding the exemption of 5 U.S.C. 553 with respect to such rules. This action, however, is not published for proposed rule making since it is interpretive, making publication for comment unnecessary.

Subpart A of Part 1962 of this chapter provides guidance on servicing loans that are secured by chattels. Under existing regulations, there are two types of chattel security: normal income security, and basic security. The definitions may be found in § 1962.4 of CFR part 1962 of subpart A. The changes made by this final rule explain the distinction between the use of sale proceeds from normal income security and the use of sale proceeds from basic security. The revision to § 1962.17(b)(1) indicates that proceeds from the sale of basic security can be used to purchase replacements, reduce the debt associated with the security, or in some cases, be used for other purposes, provided there are equal replacements that will maintain the security at acceptable levels. The proceeds from the sale of normal income security, by contrast, may be used to pay periodic debt payments, family living expenses, or farm operating expenses. These revisions also clarify that the release procedure in paragraph (b)(5) applies to both releases of proceeds from the sale of normal income security for essential family living and farm operation expenses, and to the disposition of basic security under paragraph (b)(2). Paragraph (b)(5) provides that the borrower can use basic security and its sale proceeds only as provided on Form FmHA 1962–1, "Agreement for the Use of Proceeds/Release of Chattel Security", and in accordance with paragraph (b)(1). Entries on this form will be revised, after being approved by FmHA, regarding any planned use, not previously agreed upon. Section 1806 of the Food, Agriculture, Conservation, and Trade (FACT) Act of 1990 amended Section 331(h)(2) of the Consolidated Farm and Rural Development Act, to require the Secretary to document, in the borrowers file, the consent to any transfer of security property. Paragraph (b)(5) already implements this revision in the statute; therefore, no revision to this paragraph in the regulation is required. The intent of the regulation has not been changed by these revisions. The past and present policy of the Agency remains the same.

Classification

Intergovernmental Consultation

For the reasons set forth in the final rule related to Notice 7 CFR part 3015, Subpart V (48 FR 29115, June 24, 1983)

and FmHA Instruction 1940–J, "Intergovernmental Review of Farmers Home Administration Programs and Activities," (December 23, 1983), Emergency Loans, Farm Operating Loans, and Farm Ownership Loans are excluded from the scope of Executive Order 12372 which requires intergovernmental consultation with State and local officials. The Soil and Water Loan Program is subject to the provisions of Executvie Order 12372 and FmHA Instruction 1940–J.

Programs Affected

These changes affect the following FmHA programs as listed in the Catalog of Federal Domestic Assistance:

10.404—Emergency Loans
10.406—Farm Operating Loans
10.407—Farm Ownership Loans
10.416—Soil and Water Loans

Environmental Impact Statement

This document has been reviewed in accordance with 7 CFR Part 1940, Subpart G, "Environmental Program." It is the determination of FmHA that this final action does not constitute a major Federal action significantly affecting the quality of the human environment, and in accordance with the National Environmental Policy Act of 1969, Public Law 91–190, an Environmental Impact Statement is not required.

Executive Order 12778

The proposed regulation has been reviewed in light of Executive Order 12778 and meets the applicable standards provided in sections 2(a) and 2(b)(2) of that Order. Provisions within this part which are inconsistent with state law are controlling. All administrative remedies pursuant to 7 CFR part 1900 Subpart B must be exhausted prior to filing suit.

List of Subjects in 7 CFR Part 1962

Crops, Government property, Livestock, Loan programs—Agriculture, Rural Areas.

Therefore, chapter XVIII, title 7, Code of Federal Regulations is amended as follows:

PART 1962—PERSONAL PROPERTY

1. The authority citation for part 1962 continues to read as follows:

Authority: 7 U.S.C. 1989; 5 U.S.C. 301; 7 CFR 2.23; 7 CFR 2.70.

Subpart A—Servicing and liquidation of Chattel Security

2. Section 1962.16(a) is amended in the seventh sentence by removing the following words preceding the period: "the form should be completed to show this and should be signed."

3. Section 1962.17 is amended by revising the introductory text of paragraph (a)(1), the last sentence of paragraph (a)(2), paragraphs (a)(3), (b)(1), (b)(2)(i), the first two sentences of paragraph (b)(2)(iii), and paragraph (b)(2)(vii) to read as follows:

§ 1962.17 Disposal of chattel security, use of proceeds and release of lien.

(a) *General.* (1) The borrower must account for all security and will be instructed of this requirement by the County Supervisor when a loan is made and as often afterward as necessary. When the borrower sells security, the property and proceeds remain subject to the lien until the lien is released by the County Supervisor. Purchasers of security who inquire should be informed that the property is subject to FmHA's lien and checks should be made payable jointly to the borrower and FmHA. When the borrower fails to account for security, the County Supervisor will take the actions required in § 1962.18 of this subpart. Releases of sales proceeds will be terminated when the borrower's accounts are accelerated (when Exhibit D, E, or E–1 to subpart A of part 1955 of this chapter is sent to the borrower). Termination of such releases will not occur prior to acceleration.

(2) * * * Immediately upon determining that the borrower does not have a current Form FmHA 1962–1 in the file, the County Supervisor will immediately contact the borrower to develop one.

(3) If the borrower requests a change(s) to Form FmHA 1962–1, and the County Supervisor can approve the change(s), the borrower and the County Supervisor will initial and date each change in accordance with item (6) in the Forms Manual Insert (FMI) for Form FmHA 1962–1. The form will be marked "Revised" and the borrower will be notified in writing confirming that the change(s) has been approved.

(b) * * *

(1) County Supervisors are authorized to approve or disapprove dispositions of FmHA chattel security in accordance with this subpart. The County Supervisor, with the assistance of the borrower, will complete Form FmHA 1962–1 in accordance with the FMI (available in any FmHA office) to show how, when, and to whom the borrower will sell, exchange, or consume security and use sale proceeds (include milk sale proceeds). Government payments, crop insurance and insurance proceeds derived from the loss of security will also be accounted for on Form FmHA 1962–1. This includes, for example, sale proceeds on hand and crops in storage. Only the proceeds from the sale of normal income security can be used to pay essential family and farm operation expenses. Proceeds from the sale of basic security will not be used for essential family living and farm operating expenses. In addition to payment of prior liens, basic security can only be released for the purposes listed in paragraphs (b)(2)(iv) through (b)(2)(vii). When proceeds from the disposition of normal income security are to be used to pay essential family living or farm operating expenses, County Supervisors must approve the disposition. Any disposition of basic or normal income security must be recorded on Form FmHA 1962–1. However, the borrower is responsible for providing the County Supervisor with the necessary information to update the Farm and Home Plan and Form FmHA 1962–1.

(2) * * *

(i) The Form FmHA 1962–1 must provide for releases of normal income security so that the borrower can pay essential family living and farm operating expenses. However, proceeds from the sale of basic security will not be used to pay essential family living or farm operating expenses.

* * * * *

(iii) All of the items in paragraph (b)(2)(ii) of this section may not always be considered essential for every family and farming operation. County Supervisors must consider the individual borrower's operation, what is typical for that type of operation in the area administered by the County Supervisor, and what would be an efficient method of production considering the borrower's resources. * * *

* * * * *

(vii) Property can be exchanged, with prior FmHA approval and in accordance with paragraph (b)(5) of this section, for property which is better suited to the borrower's needs if FmHA will acquire a lien on the new property, at least equal in value to the lien held on the property exchanged.

* * * * *

4. Section 1962.17(b)(2)(ii), under the last item of expenses entitled "Essential farm machinery," is amended by changing the word "breaks" to "is."

Dated: July 26, 1993.

Bob Nash,

Under Secretary, Small Community and Rural Development.

[FR Doc. 93–21126 Filed 8–31–93; 8.45 am]

BILLING CODE 3410–07–M

FEDERAL RESERVE SYSTEM

12 CFR Part 211

[Regulation K]

International Banking Operations; Technical Corrections

AGENCY: Board of Governors of the Federal Reserve System.

ACTION: Final rule; technical corrections.

SUMMARY: As part of the regulations implementing the Foreign Bank Supervision Enhancement Act of 1991, the definition of "foreign banking organization" in Regulation K was moved. However, three cross-references to this definition were inadvertently not changed. This rule corrects these cross-references.

EFFECTIVE DATE: August 31, 1993.

FOR FURTHER INFORMATION CONTACT: N. Peter Knoll, Attorney (202/452-5237), Legal Division, Board of Governors of the Federal Reserve System. For the hearing impaired *only*, Telecommunication Device for the Deaf (TDD), Dorothea Thompson (202/452-3544), Board of Governors of the Federal Reserve System, 20th & C Streets, NW., Washington, DC 20551.

SUPPLEMENTARY INFORMATION: As part of the regulations implementing the Foreign Bank Supervision Enhancement Act of 1991, the definition of "foreign banking organization" in Regulation K (12 CFR part 211) was moved from § 211.23(a)(2) to § 211.21(n). See 57 FR 12992, 12998 (Apr. 15, 1992) (interim rule placing definition at § 211.22(n)); 58 FR 6348, 6359 (Jan. 28, 1993) (final rule placing definition at § 211.21(n)).

However, the cross-references in §§ 211.31(b)(4), 211.41(b), and 211.42(a) to the definition of "foreign banking organization" were inadvertently not changed from 211.23(a)(2) to 211.21(n). This rule corrects these cross-references.

List of Subjects in 12 CFR Part 211

Exports, Foreign banking, Holding companies, Investments, Reporting and recordkeeping requirements.

For the reasons outlined above, the Board of Governors amends 12 CFR part 211 as set forth below:

PART 211—INTERNATIONAL BANKING OPERATIONS

1. The authority citation for 12 CFR part 211 continues to read as follows:

Authority: Federal Reserve Act (12 U.S.C. 221 *et seq.*); Bank Holding Company Act of 1956, as amended (12 U.S.C. 1841 *et seq.*); the International Banking Act of 1978 (Pub. L. 95-369; 92 Stat. 607; 12 U.S.C. 3101 *et seq.*); the Bank Export Services Act (Title II, Pub. L. 97-290, 96 Stat. 1235); the International Lending Supervision Act (Title IX, Pub. L. 98-181, 97 Stat. 1153, 12 U.S.C. 3901 *et seq.*); the Export Trading Company Act Amendments of 1988 (Title III, Pub. L. 100-418, 102 Stat. 1384 (1988)).

2. Section 211.31(b)(4) is amended by removing "211.23(a)(2)" and adding in its place "211.21(n)".

3. Section 211.41(b) is amended by removing "211.23(a)(2)" and adding in its place "211.21(n)".

4. Section 211.42(a) is amended by removing "211.23(a)(2)" and adding in its place "211.21(n)".

By order of the Board of Governors of the Federal Reserve System, August 26, 1993.

William W. Wiles,

Secretary of the Board.

[FR Doc. 93-21225 Filed 8-31-93; 8:45 am]

BILLING CODE 6210-01-F

DEPARTMENT OF TRANSPORTATION

Federal Aviation Administration

14 CFR Part 39

[Docket No. 92-NM-200-AD; Amendment 39-8679; AD 93-17-08]

Airworthiness Directives; Boeing Model 737 Series Airplanes

AGENCY: Federal Aviation Administration, DOT.

ACTION: Final rule.

SUMMARY: This amendment adopts a new airworthiness directive (AD), applicable to certain Boeing Model 737 series airplanes, that requires incorporation of certain structural modifications. This amendment is prompted by an evaluation by the Model 737 Structures Working Group, comprised of aircraft operators, manufacturers, and the FAA. This Working Group evaluated Boeing service bulletins that must be included as part of the "Aging Airplane Structural Modification Program." The actions specified by this AD are intended to prevent degradation in the structural capabilities of the affected airplanes. This action also reflects the FAA's decision that long term continued operational safety should be assured by actual modification of the airframe rather than repetitive inspections.

DATES: Effective October 1, 1993.

The incorporation by reference of certain publications listed in the regulations is approved by the Director of the Federal Register as of October 1, 1993.

ADDRESSES: The service information referenced in this AD may be obtained from Boeing Commercial Airplane Group, P.O. Box 3707, Seattle, Washington 98124-2207. This information may be examined at the Federal Aviation Administration (FAA), Transport Airplane Directorate, Rules Docket, 1601 Lind Avenue, SW., Renton, Washington; or at the Office of the Federal Register, 800 North Capitol Street, NW., suite 700, Washington, DC.

FOR FURTHER INFORMATION CONTACT: Thomas Rodriguez, Aerospace Engineer, Airframe Branch, ANM-120S, FAA, Transport Airplane Directorate, Seattle Aircraft Certification Office, 1601 Lind Avenue, SW., Renton, Washington 98055-4056; telephone (206) 227-2779; fax (206) 227-1181.

SUPPLEMENTARY INFORMATION: A proposal to amend part 39 of the Federal Aviation Regulations to include an airworthiness directive (AD) that is applicable to certain Boeing Model 737 series airplanes was published in the **Federal Register** on March 3, 1993 (58 FR 12195). That action proposed to require incorporation of certain structural modifications.

Interested persons have been afforded an opportunity to participate in the making of this amendment. Due consideration has been given to the comments received.

One commenter supports the proposed rule.

One commenter requests that the AD number pertaining to the corrosion prevention and control program for Model 737 series airplanes be clarified. The commenter notes that the AD was referenced incorrectly in the Discussion section of the proposal. The FAA acknowledges that a typographical error was made in the AD number as it appeared in the Discussion section of the proposal. The correct AD number for the corrosion prevention and control program for Model 737 series airplanes is AD 90-25-01. The FAA notes that the amendment number and **Federal Register** citation for that AD were stated correctly in the proposal.

One commenter requests that the number of affected airplanes specified in the economic impact information be revised. The commenter notes that there are more than 29 airplanes of U.S. registry that would be affected by the proposal. This commenter, however, did not provide any additional information as to a more accurate number. The FAA does not concur that a revision to the economic impact information is necessary. The FAA acknowledges that over the lifetime of the AD itself, more than 29 airplanes eventually may be

affected by the rule. However, as presented in the preamble to the proposal (and below), the economic impact information specifies only an estimate of the number of U.S.-registered airplanes that will be affected by this AD action within the initial threshold of 4 years. As such, 29 airplanes continues to represent the best estimation that the FAA can make, given the data available at this time.

Two commenters request that the proposed compliance times be clarified. One commenter suggests that the threshold, when expressed as a calendar date in any service bulletin that is referenced in the Boeing Document, may be subject to misinterpretation since the proposal requires modification by that calendar date, in lieu of the proposed threshold of 4 years required by proposed paragraph (a). This commenter presents an example in which a service bulletin specified a threshold of 75,000 flight cycles or 20 years of airframe age, which would be equivalent to two different calendar dates. Another commenter notes that the incorporation threshold expressed in the Discussion section of the proposal, which states that the mandatory structural modification program is to be accomplished upon reaching the "applicable economic design goal or 4 years after the effective date of the AD," contradicts the incorporation threshold (January 31, 1996) specified in Boeing Alert Service Bulletin 737-32A-1224, which is referenced in the Boeing Document (cited in the proposal as the appropriate source of service information). The FAA concurs, in part. The FAA acknowledges that the incorporation threshold described in the Discussion section of the proposal differs from the incorporation threshold specified in Boeing Alert Service Bulletin 737-32A-1224. However, paragraph (a) of the final rule clearly states that when the incorporation threshold is expressed as a specific calendar date (not expressed in terms of flight cycles or age of airframe that must be computed to obtain a calendar date), the modifications must be accomplished by the calendar date specified in the service bulletin. Further, since the Discussion section is not restated in the final rule, no change to the final rule is warranted.

Several commenters recommend that proposed paragraph (a) be revised to include the modifications specified in section 3 of the Boeing Document because section 3 amends the Boeing Document significantly. One commenter notes that approximately 90 percent of the service bulletins referenced in section 3 of the Boeing Document have been revised since issuance of the Boeing Document. The FAA does not concur. Section 3 of the Boeing Document is the subject of AD 90-06-02, Amendment 39-6489 (55 FR 8372, March 7, 1990). Subsequent revisions to section 3 of the Boeing Document have been approved as acceptable alternative methods of compliance to AD 90-06-02.

One commenter requests that the final rule be revised to include all subsequent FAA-approved revisions of the Boeing Document referenced in the proposal as appropriate sources of service information. The commenter asserts that this would eliminate "unnecessary paperwork" by circumventing the alternative methods of compliance provision in proposed paragraph (b). The FAA does not concur. To use the phrase, "or later FAA-approved revisions," in an AD when referring to the service document, violates Office of the Federal Register (OFR) regulations regarding approval of materials "incorporated by reference" in rules. In general terms, these OFR regulations require that either the service document contents be published as part of the actual AD language; or that the service document be submitted for approval by the OFR as "referenced" material, in which case it may be only referred to in the text of an AD. The AD may only refer to the service document that was submitted and approved by the OFR for "incorporation by reference." In order for operators to use later revisions of the referenced document (released after the publication of the AD), either the AD must be revised to reference the specific later revisions, or operators must request the approval of them as an alternative method of compliance with this AD [under the provisions of paragraph (b)].

One commenter requests that the proposal be revised to include policies that have been made since issuance of AD 90-06-02 (which makes mandatory the modifications specified in section 3 of the Boeing Document). This commenter, however, did not refer to any specific "policies." The FAA does not concur that revision of the rule is necessary. Part 39 of the Federal Aviation Regulations, Airworthiness Directives, is for purposes of issuing rules to correct unsafe conditions that may exist or develop in aircraft, not for purposes of publishing FAA policy decisions. Regardless of this, however, the FAA assures the commenter that any policy decisions made by FAA that were pertinent to AD 90-06-02 are also valid for and applicable to this rulemaking action.

One commenter requests that, to clarify the requirements of the proposal, the following statement be added to the final rule: "The modifications shall be done in accordance with Boeing Document D6-38505, 'Aging Airplane Service Bulletin Structural Modification and Inspection Program—Model 737-100/-200/-200C,' Revision F, dated April 23, 1992." The FAA concurs and paragraph (d) has been added to the final rule to specify this; however, this paragraph is merely a restatement of the requirement to use the service information referenced in paragraph (a) of the final rule. Its addition to the rule simply fulfills the requirements of the Office of the Federal Register to incorporate the referenced Boeing Document as part of this rulemaking action.

After careful review of the available data, including the comments noted above, the FAA has determined that air safety and the public interest require the adoption of the rule with the changes previously described. The FAA has determined that these changes will neither increase the economic burden on any operator nor increase the scope of the AD.

There are approximately 1,200 Model 737 series airplanes of the affected design in the worldwide fleet. The FAA estimates that 29 airplanes of U.S. registry will be affected by this AD within the initial threshold of 4 years. The cost to modify each airplane is estimated to be $57,887. This cost includes the price of modification kits, which is $27,252 per airplane, and the estimated number of work hours to accomplish the modifications, which is 557 work hours at $55 per work hour. It does not include downtime, planning, set up, familiarization, or tool acquisition costs. Based on these figures, the total cost impact of the proposed AD on U.S. operators is estimated to be $1,678,723 over the 4 year time period. This total cost figure assumes that no operator has yet accomplished the requirements of this AD.

The regulations adopted herein will not have substantial direct effects on the States, on the relationship between the national government and the States, or on the distribution of power and responsibilities among the various levels of government. Therefore, in accordance with Executive Order 12612, it is determined that this final rule does not have sufficient federalism implications to warrant the preparation of a Federalism Assessment.

For the reasons discussed above, I certify that this action (1) is not a "major rule" under Executive Order 12291; (2) is not a "significant rule" under DOT Regulatory Policies and Procedures (44

FR 11034, February 26, 1979); and (3) will not have a significant economic impact, positive or negative, on a substantial number of small entities under the criteria of the Regulatory Flexibility Act. A final evaluation has been prepared for this action and it is contained in the Rules Docket. A copy of it may be obtained from the Rules Docket at the location provided under the caption **ADDRESSES**.

List of Subjects in 14 CFR Part 39

Air transportation, Aircraft, Aviation safety, Incorporation by reference, Safety.

Adoption of the Amendment

Accordingly, pursuant to the authority delegated to me by the Administrator, the Federal Aviation Administration amends 14 CFR part 39 of the Federal Aviation Regulations as follows:

PART 39—AIRWORTHINESS DIRECTIVES

1. The authority citation for part 39 continues to read as follows:

Authority: 49 U.S.C. App. 1354(a), 1421 and 1423; 49 U.S.C. 106(g); and 14 CFR 11.89.

§ 39.13 [Amended]

2. Section 39.13 is amended by adding the following new airworthiness directive:

93-17-08 Boeing: Amendment 39-8679. Docket 92-NM-200-AD.

Applicability: Model 737-100, 737-200, 737-200C airplanes, certificated in any category.

Compliance: Required as indicated, unless accomplished previously. To prevent structural failure, accomplish the following:

(a) Except as provided below, prior to reaching the incorporation thresholds listed in Boeing Document No. D6-38505, "Aging Airplane Service Bulletin Structural Modification and Inspection Program—Model 737-100/-200/-200C," Revision F, dated April 23, 1992, or within the next 4 years after the effective date of this AD, whichever occurs later, accomplish the structural modifications listed in appendices A.3 and B.3 of the Boeing Document. Service bulletins whose threshold is specified in the Boeing Document by a calendar date must be modified by that date in lieu of the 4 years specified in this paragraph.

Note 1: The modifications required by this paragraph do not terminate the inspection requirements of any other AD unless that AD specifies that any such modification constitutes terminating action for the inspection requirements.

(b) An alternative method of compliance or adjustment of the compliance time that provides an acceptable level of safety may be used if approved by the Manager, Seattle Aircraft Certification Office (ACO), FAA, Transport Airplane Directorate. Operators shall submit their requests through an appropriate FAA Principal Maintenance Inspector, who may add comments and then send it to the Manager, Seattle ACO.

Note 2: Information concerning the existence of approved alternative methods of compliance with this AD, if any, may be obtained from the Seattle ACO.

(c) Special flight permits may be issued in accordance with FAR 21.197 and 21.199 to operate the airplane to a location where the requirements of this AD can be accomplished.

(d) The modifications shall be done in accordance with Boeing Document No. D6-38505, "Aging Airplane Service Bulletin Structural Modification and Inspection Program—Model 737-100/-200/-200C," Revision F, dated April 23, 1992, which includes the following list of effective pages:

Page No.	Revision shown on page	Date shown on page
List of active pages: page c.	F	(This page is not dated).

(**Note:** The issue date of Revision F is indicated only on page c of the List of Active Pages; no other page of the document is dated.)

This incorporation by reference was approved by the Director of the Federal Register in accordance with 5 U.S.C. 552(a) and 1 CFR part 51. Copies may be obtained from Boeing Commercial Airplane Group, P.O. Box 3707, Seattle, Washington 98124-2207. Copies may be inspected at the FAA, Transport Airplane Directorate, 1601 Lind Avenue, SW., Renton, Washington; or at the Office of the Federal Register, 800 North Capitol Street, NW., suite 700, Washington, DC.

(e) This amendment becomes effective on October 1, 1993.

Issued in Renton, Washington, on August 25, 1993.

Darrell M. Pederson,

Acting Manager, Transport Airplane Directorate, Aircraft Certification Service.

[FR Doc. 93-21223 Filed 8-31-93; 8:45 am]

BILLING CODE 4910-13-P

DEPARTMENT OF TRANSPORTATION

Coast Guard

33 CFR Parts 100 and 165

[CGD 93-050]

Safety, Security Zones, and Special Local Regulations

AGENCY: Coast Guard, DOT.

ACTION: Notice of temporary rules issued.

SUMMARY: This document provides required notice of substantive rules adopted by the Coast Guard and temporarily effective between April 1, 1993 and June 30, 1993, which were not published in the **Federal Register**. This quarterly notice lists temporary local regulations, security zones, and safety zones, which were of limited duration and for which timely publication in the **Federal Register** was not possible.

DATES: This notice lists temporary Coast Guard district regulations that were established and terminated between April 1, 1993 and June 30, 1993, as well as several regulations which were not included in the previous quarterly list.

ADDRESSES: The complete text of these temporary regulations may be examined at, and is available on request, from Executive Secretary, Marine Safety Council (G-LRA), U.S. Coast Guard Headquarters, 2100 Second Street, SW., Washington, DC 20593-0001.

FOR FURTHER INFORMATION CONTACT: Sheri deGrom, Executive Secretary, Marine Safety Council at (202) 267-6233 between the hours of 8 a.m. and 3:30 p.m., Monday through Friday.

SUPPLEMENTARY INFORMATION: District Commanders and Captains of the Port (COTP) must be immediately responsive to the safety needs of the waters within their jurisdiction; therefore, District Commanders and COTPs have been delegated the authority to issue certain local regulations. Safety zones may be established for safety or environmental purposes. A safety zone may be stationary and described by fixed limits or it may be described as a zone around a vessel in motion. Security zones limit access to vessels, ports, or waterfront facilities to prevent injury or damage. Special local regulations are issued to assure the safety of participants and spectators at regattas and other marine events. Timely publication of these regulations in the **Federal Register** is often precluded when a regulation responds to an emergency, or when an event occurs without advance notice. However, the affected public is informed of these regulations through Local Notices to Mariners, press releases, and other means. Moreover, actual notification is frequently provided by Coast Guard patrol vessels enforcing the restrictions imposed by the regulation.

Because mariners are notified by Coast Guard officials on-scene prior to enforcement action, **Federal Register** notice is not required to place the special local regulation, security zone, or safety zone in effect. However, the Coast Guard, by law, must publish in the **Federal Register** notice of substantive rules adopted. To discharge this legal obligation without imposing

undue expense on the public, the Coast Guard periodically publishes a list of these temporary special local regulations, security zones, and safety zones. Permanent regulations are not included in this list because they are published in their entirety in the **Federal Register**. Temporary regulations may also be published in their entirety if sufficient time is available to do so before they are placed in effect or terminated. These safety zones, special local regulations and security zones have been exempted from review under E.O. 12291 (because of their emergency nature, or limited scope and temporary effectiveness).

The following regulations were placed in effect temporarily during the period April 1, 1993 and June 30, 1993, unless otherwise indicated.

Docket No.	Location	Type	Effective date
Baltimore 93–006	Annapolis, MD	Security Zone	4/1/93
Baltimore 93–008	Baltimore, MD	Safety Zone	5/9/93
Baltimore 93–011	Annapolis, MD	Safety Zone	5/22/93
Baltimore 93–012	Cambridge, MD	Safety Zone	6/6/93
Baltimore 93–013	Baltimore, MD	Safety Zone	6/5/93
Charleston 93–043	Cooper River, SC	Safety Zone	6/14/93
Charleston 93–053	Charleston, SC	Safety Zone	6/13/93
Corpus Christi 93–003	Corpus Christi, TX	Safety Zone	2/5/93
Duluth 93–026	Lake Superior, MI	Safety Zone	6/12/93
Jacksonville 93–029	Fernandina Beach, FL	Safety Zone	4/30/93
Jacksonville 93–030	Jacksonville, FL	Safety Zone	4/23/93
Jacksonville 93–033	Jacksonville, FL	Safety Zone	5/14/93
Jacksonville 93–034	St. Augustine, FL	Safety Zone	5/22/93
Jacksonville 93–061	Jacksonville, FL	Safety Zone	6/26/93
Louisville 93–004	Ohio River	Safety Zone	4/28/93
Louisville 93–006	Ohio River	Safety Zone	6/13/93
Louisville 93–009	Licking River	Safety Zone	6/11/93
Louisville 93–010	Ohio River	Safety Zone	6/21/93
Memphis 93–002	Lower Mississippi	Security Zone	5/12/93
Miami 93–036	Port of Miami	Safety Zone	5/6/93
Paducah 93–004	Tennessee River	Safety Zone	5/11/93
Paducah 93–007	Cumberland River	Safety Zone	6/16/93
Paducah 93–008	Tennessee River	Safety Zone	6/26/93
Pittsburgh 93–003	Monongahela River	Safety Zone	6/22/93
Port Arthur 93–001	Port Arthur, TX	Safety Zone	2/20/93
Port Arthur 93–003	Port of Beaumont	Security Zone	6/3/93
San Francisco 93–002	San Francisco Bay	Security Zone	4/16/93
San Francisco 93–003	San Francisco Bay	Safety Zone	5/15/93
Savannah 93–042	Savannah River	Safety Zone	5/22/93
Southeast Alaska 93–002	Portland Island, AK	Safety Zone	6/26/93
St. Louis 93–008	Upper Mississippi	Safety Zone	4/2/93
St. Louis 93–009	Illinois River	Safety Zone	4/15/93
St. Louis 93–010	Upper Mississippi	Safety Zone	4/11/93
St. Louis 93–011	Illinois River	Safety Zone	4/20/93
St. Louis 93–012	Upper Mississippi	Safety Zone	4/26/93
St. Louis 93–014	Illinois River	Safety Zone	5/11/93
St. Louis 93–015	Missouri River	Safety Zone	5/11/93
St. Louis 93–018	Upper Mississippi	Safety Zone	5/17/93
St. Louis 93–021	Missouri River	Safety Zone	5/12/93
St. Louis 93–022	Upper Mississippi	Safety Zone	5/20/93
St. Louis 93–023	Upper Mississippi	Safety Zone	5/28/93
St. Louis 93–024	Upper Mississippi	Safety Zone	6/7/93
Toledo 93–002	Lake Erie	Safety Zone	6/14/93
Wilmington 93–001	Northeast Cape Fear	Safety Zone	6/16/93
01–93–004	North Kingstown, RI	Safety Zone	5/29/93
01–93–006	New York Harbor, NY	Safety Zone	5/26/93
01–93–014	North Hempstead, NY	Safety Zone	5/28/93
01–93–017	New York Harbor	Safety Zone	5/26/93
01–93–021	Lower Hudson River	Safety Zone	6/27/93
01–93–024	NY and NJ	Safety Zone	4/6/93
01–93–026	Bristol Harbor, RI	Safety Zone	7/5/93
01–93–028	Newark Bay, NJ	Safety Zone	4/10/93
01–93–032	Lower East River, NY	Safety Zone	5/30/93
01–93–042	Staten Island, NY	Safety Zone	5/2/93
01–93–043	Providence River, RI	Safety Zone	5/30/93
01–93–044	Lower East River, NY	Security Zone	5/12/93
01–93–045	Hudson River	Safety Zone	5/30/93
01–93–048	Upper New York Bay	Safety Zone	6/8/93
01–93–049	Upper New York Bay	Safety Zone	6/27/93
01–93–059	East Hampton, NY	Safety Zone	5/29/93
01–93–060	Albany, NY	Safety Zone	6/12/93
01–93–064	Albany, NY	Safety Zone	6/11/93
01–93–073	NY and NJ	Safety Zone	6/10/93
01–93–082	NY and NJ	Safety Zone	6/25/93

Docket No.	Location	Type	Effective date
01-93-083	Upper New York Bay	Security Zone	6/26/93
02-93-004	Kaskaskia River	Special Local	5/1/93
02-93-005	Tennessee River	Special Local	5/1/93
02-93-006	Tennessee River	Special Local	6/5/93
02-93-008	Illinois River	Special Local	5/14/93
02-93-011	Upper Mississippi	Special Local	6/12/93
02-93-012	Upper Mississippi	Special Local	6/12/93
02-93-014	Ohio River	Special Local	6/5/93
07-93-022	Ft. Lauderdale, FL	Special Local	5/15/93
08-93-010	Galveston, TX	Safety Zone	5/9/93
08-93-012	Corpus Christi, TX	Safety Zone	5/9/93
09-93-023	Cleveland, OH	Safety Zone	6/1/93
11-93-003	San Diego Bay	Safety Zone	4/4/93
13-93-004	Columbia River	Safety Zone	4/1/93
13-93-006	Puget Sound, WA	Safety Zone	4/7/93
13-93-007	Puget Sound, WA	Safety Zone	4/6/93
13-93-008	Tacoma, WA	Safety Zone	4/2/93
13-93-009	Columbia River	Safety Zone	4/8/93

Dated: August 27, 1993.

Sheri de Grom,

Executive Secretary, Marine Safety Council.

[FR Doc. 93-21302 Filed 8-31-93; 8:45 am]

BILLING CODE 4910-14-M

---

33 CFR Part 117

[CGD-92-015b]

RIN 2115-AE30

Temporary Deviations for Drawbridge Operation Requirements

AGENCY: Coast Guard, DOT.

ACTION: Final rule.

SUMMARY: The Coast Guard is amending its drawbridge operation regulations to allow for temporary deviations for up to 90 days. Under current regulations, a Coast Guard District Commander may authorize a temporary deviation from drawbridge operation requirements for a maximum of 60 days. The additional 30 days will better accommodate seasonal testing and public response surveys, and will provide additional time for a test regulation to be in effect before comments are due on the proposed change and its effectiveness.

DATES: This rule becomes effective on October 1, 1993.

ADDRESSES: Unless otherwise indicated, documents referenced in this preamble are available for inspection and copying at the office of the Executive Secretary, Marine Safety Council, U.S. Coast Guard, 2100 Second Street, SW., Washington, DC 20593-0001, room 3406, between 8 a.m. and 3 p.m., Monday through Friday, except Federal holidays. The telephone number is (202) 267-1477 for more information.

FOR FURTHER INFORMATION CONTACT: Ms. Diane Schneider, Project Manager (G-NBR-1), at (202) 267-0377.

SUPPLEMENTARY INFORMATION:

Drafting Information

The principal persons involved in drafting this document are Ms. Diane Schneider, Project Manager, and Ms. Helen Boutrous, Project Counsel, Office of Chief Counsel.

Regulatory History

On January 4, 1993, the Coast Guard published a notice of proposed rulemaking entitled "Temporary Deviations for Drawbridge Operation Requirements" in the **Federal Register** (58 FR 47). The Coast Guard received no letters commenting on the proposal. A public hearing was not requested and one was not held.

Background and Purpose

Part 117 of title 33 of the Code of Federal Regulations contains both general and specific requirements for drawbridge operations. In order to evaluate suggested changes to the drawbridge operation requirements, § 117.43 allows a Coast Guard District Commander to authorize temporary deviations from the regulations contained in part 117, for up to 60 days. The authorized temporary deviation is meant to allow for regulations testing as a prelude to permanent regulation changes governing drawbridge operations and schedules. An issue was raised regarding the need to revise § 117.43 because the maximum 60-day period does not provide adequate time to test a proposed regulation change over various lengths of seasonal periods in order to capture significant circumstances associated with seasonal waterborne traffic patterns. The 60-day limitation also does not allow enough time for adequate public survey responses or commentary on proposed changes.

Discussion of Amendments

This final rule will allow temporary deviations from drawbridge operation regulations to be authorized by a Coast Guard District Commander for up to 90 days, instead of the current 60 days. This will make the testing of proposed changes more effective and will increase the likelihood of more useful feedback from the affected public.

Discussion of Comments and Changes

There were no comments to this notice of proposed rulemaking. The Coast Guard has made no changes to the proposal in this final rule.

Regulatory Evaluation

This final rule is not major under Executive Order 12291 and not significant under the "Department of Transportation Regulatory Policies and Procedures" (44 FR 11040; February 26, 1979). The Coast Guard expects the economic impact of this rulemaking to be so minimal that a full Regulatory Evaluation is unnecessary. This rulemaking merely extends the allowable time for temporary changes in drawbridge operation requirements for regulatory purposes. There will be no cost to the general public. In fact, the ultimate purpose is to balance the needs of navigation and railroad and land transportation in the most effective and efficient manner possible, in order to minimize to the greatest extent practicable inconvenience and transportation and navigation costs which may be associated with delays caused by scheduling or other operating requirements in need of adjustment.

Small Entities

This rulemaking is intended to provide greater flexibility in the regulation which allows for testing

proposed changes in drawbridge operations or scheduling. It imposes no special expense on small businesses. Therefore, because it expects the economic impact of this final rule to be minimal, the Coast Guard certifies under section 605(b) of the Regulatory Flexibility Act (5 U.S.C. 601 *et seq.*) that this will not have a significant economic impact on a substantial number of small entities.

Collection of Information

This final rule contains no additional collection of information requirements under the Paperwork Reduction Act (44 U.S.C. 3501 *et seq.*).

Federalism

The Coast Guard has analyzed this final rule under the principles and criteria contained in Executive Order 12612 and has determined that this rulemaking does not have sufficient federalism implications to warrant the preparation of a Federalism Assessment. Under federal law, the primary jurisdiction to regulate drawbridges across the navigable waters of the United States is vested in the Secretary of Transportation and delegated to the Coast Guard. Therefore, the Coast Guard intends this final rule to preempt State action addressing this subject matter.

Environment

The Coast Guard considered the environmental impact of this rulemaking and concluded that under section 2.B.2.g.(5) of Commandant Instruction M16475.1B, this final rule is categorically excluded from further environmental documentation because it is a Bridge Administration Program action involving the promulgation of operating requirements or procedures for drawbridges. A Categorical Exclusion Determination is available in the docket for inspection or copying where indicated under **ADDRESSES**.

List of Subjects in 33 CFR Part 117

Bridges.

For the reasons set out in the preamble, the Coast Guard amends 33 CFR part 117 as follows:

PART 117—DRAWBRIDGE OPERATION REGULATIONS

1. The authority citation for part 117 continues to read as follows:

Authority: 33 U.S.C. 499; 49 CFR 1.46; 33 CFR 1.05–1(g).

2. Section 117.43 is revised to read as follows:

§ 117.43 Changes in draw operation requirements for regulatory purposes.

In order to evaluate suggested changes to the drawbridge operation requirements, the District Commander may authorize temporary deviations from the regulations in this part for periods not to exceed 90 days. Notice of these deviations is disseminated in the Local Notices to Mariners and published in the **Federal Register**.

Dated: August 27, 1993.

W.J. Ecker,

Rear Admiral, U.S. Coast Guard, Chief, Office of Navigation Safety and Waterway Services.

[FR Doc. 93–21300 Filed 8–31–93; 8:45 am]

BILLING CODE 4910–14–M

---

33 CFR 161

[CGD 92–052]

RIN 2115–AE36

Vessel Traffic Service New York Area

AGENCY: Coast Guard, DOT.

ACTION: Interim final rule.

SUMMARY: The Coast Guard is expanding the boundaries of Vessel Traffic Service New York (VTSNY). This expansion provides the Vessel Traffic Center (VTC) with a more complete vessel traffic image for the entrances to New York Harbor via Ambrose Channel, Raritan Bay, and Long Island Sound. The expansion also furnishes additional information on weather conditions and potential hazards to navigation. As a result, the VTSNY area expansion will assist in safer and more efficient vessel transits in the congested New York Harbor channels and reduce the potential for groundings, rammings, and collisions.

EFFECTIVE DATE: October 18, 1993.

ADDRESSES: Unless otherwise indicated, documents referenced in this preamble are available for inspection or copying at the office of the Executive Secretary, Marine Safety Council (G–LRA/3406), U.S. Coast Guard Headquarters, 2100 Second Street SW., room 3406, Washington, DC 20593–0001 between 8 a.m. and 3 p.m., Monday through Friday, except Federal holidays. The telephone number is (202) 267–1477.

FOR FURTHER INFORMATION CONTACT: Irene Hoffman, Project Manager, Vessel Traffic Services Division. The telephone number is 202–267–6277.

SUPPLEMENTARY INFORMATION:

Drafting Information

The principal persons involved in drafting this document are Irene Hoffman, Project Manager, Vessel Traffic Services Division and Nicholas Grasselli, Project Counsel, Office of Chief Counsel.

Regulatory History

On August 27, 1990, the Coast Guard published in the **Federal Register** (55 FR 34908), a final rule which established mandatory vessel participation in VTSNY. This final rule became effective on February 15, 1991. The rule stated that any further proposal expanding VTSNY areas would be published in a separate notice of proposed rulemaking. The Coast Guard believes that the VTSNY area should be expanded and is doing so in this rule.

On May 25, 1993, the Coast Guard published a notice of proposed rulemaking to expand the VTSNY area entitled, "Vessel Traffic Service New York Area" in the **Federal Register** (58 FR 30098). The Coast Guard received two letters commenting on the proposal. A public hearing was not requested and one was not held.

Background and Purpose

The Ports and Waterways Safety Act (33 U.S.C. 1221 *et seq.*), as amended by Port and Tanker Safety Act of 1978 and the Oil Pollution Act of 1990, provides authority for the Secretary of the Department of Transportation to construct, operate, maintain, improve or expand vessel traffic services. The Secretary has redelegated this authority to the Commandant, U.S. Coast Guard.

VTSNY was established in New York Harbor, Kill Van Kull, Newark Bay, and Upper New York Bay in response to heightened public concern for vessel traffic safety. Existing regulations require compliance with reporting and participation procedures for certain vessels entering into and operating within this area. The VTS has a surveillance system and radiotelephone network for collecting and providing information within this prescribed area.

This expansion of VTSNY will furnish additional advance information on weather conditions, traffic congestion, and potential hazards to navigation. This information will then be relayed to vessels operating in the expanded area, permitting them to respond to conditions as necessary.

Discussion of Comments and Changes

The Coast Guard received two letters encouraging the expansion of VTSNY and the effort to provide a more complete vessel traffic image for the entrances to New York Harbor. One comment letter, received after the close of the comment period, suggested that the VTSNY expansion effort be extended up the Hudson River at least

to the George Washington Bridge area. The level of traffic does not warrant radar surveillance of this area. However, the Hudson River area has VHF communications capabilities and VTSNY presently monitors vessel movements in portions of the area suggested by the commentor. VTSNY regulations require vessels intending to enter the VTS area report to the VTC 15 minutes prior to entering the VTS area.

At present, the VTSNY area (33 CFR 161.580) is bounded by the Verrazano-Narrows Bridge to the south, the Brooklyn Bridge and Holland Tunnel to the east and north, Kill Van Kull to the Arthur Kill (AK) Railroad Bridge, and Newark Bay to the Lehigh Valley Draw Bridge.

As discussed in the notice of proposed rulemaking, the Coast Guard is expanding VTSNY's required participation boundary in three phases. In addition this interim final rule for Phase I, the Coast Guard intends to issue one more interim final rule for Phase II. A final rule, would then encompass Phase III and the total VTS expansion area. Phase II and Phase III boundaries are described in the proposed rule.

This interim final rule amends 33 CFR 161.580 and implements Phase I by expanding the VTSNY's required participation area from the existing boundary at the Verrazano-Narrows Bridge south to the entrance buoys at Ambrose, Sandy Hook and Swash Channels in Lower New York Bay, and west into Raritan Bay terminating at a line from Great Kills Light on Staten Island to Point Comfort in New Jersey.

Regulatory Evaluation

This rule is not major under Executive Order 12291 and not significant under the "Department of Transportation Regulatory Policies and Procedures" (44 FR 11040; February 26, 1979).

The Coast Guard has determined that the economic impact of this interim final rule to be so minimal that a full Regulatory Evaluation is unnecessary. Most vessels that are affected by this rule are already required to participate in VTSNY. The expansion of the VTS area only requires these vessels to communicate with the VTC earlier than presently required. In some cases, vessels are already voluntarily participating in the expanded areas. This interim final rule does not impose a measurable impact on these vessels.

Small Entities

As discussed in the preamble, the expansion of the VTS area only requires certain vessels to communicate with the VTC earlier than presently required. This requirement will have little impact on vessels that are affected by this rule. Therefore, the Coast Guard certifies under section 605(b) of the Regulatory Flexibility Act (5 U.S.C. 601 *et seq.*) that this rule will not have a significant economic impact on a substantial number of small entities.

Collection of Information

This proposal contains no collection of information requirements under the Paperwork Reduction Act (44 U.S.C. 3501 *et seq.*).

Federalism

The Coast Guard has analyzed this interim final rule under the principles and criteria contained in Executive Order 12612 and has determined that it does not have sufficient federalism implications to warrant the preparation of a Federalism Assessment. VTS operating procedures are a matter for which regulations should be developed on the national level, to avoid unreasonably burdensome variances and confusion in applicability and operating requirements. These regulations provide uniform VTSNY operating requirements in an expanded VTSNY area and preempt States from adopting similar requirements.

Environment

The Coast Guard considered the environmental impact of this interim final rule and concluded that under section 2.B.2 of Commandant Instruction M16475.1B, this rule is categorically excluded from further environmental documentation. This rule, which is primarily administrative, requires the Master, Pilot or person directing the movement of a vessel to participate in an expanded VTSNY area. No significant effect on the environment is expected. While the Coast Guard also recognizes that this rulemaking may have a positive effect on the environment by minimizing the risk of environmental harm resulting from collisions and groundings of vessels in the VTSNY area, the impact is not significant enough to warrant further documentation. A Categorical Exclusion Determination is available in the docket for inspection or copying where indicated under **ADDRESSES**.

List of Subjects in 33 CFR Part 161

Harbors, Reporting and recordkeeping requirements, Navigation (water), Vessels, Waterways.

For the reasons set out in the preamble, the Coast Guard amends 33 CFR Part 161 as follows:

PART 161—VESSEL TRAFFIC MANAGEMENT

1. The authority citation for part 161 continues to read as follows:

Authority: 33 U.S.C. 1231; 49 CFR 1.46.

2. Section 161.580 is revised to read as follows:

§ 161.580 VTSNY area.

The VTS New York area consists of the waters of the Lower New York Bay bounded to the east by a line drawn from Norton Point to Breezy Point, then south to the entrance buoys at Ambrose, Sandy Hook and Swash Channels, and to the west by a line drawn in the Raritan Bay from Great Kills Light on Staten Island to Point Comfort in New Jersey. In addition, VTSNY encompasses the Upper New York Bay waters to the west, including the Kill Van Kull south to the AK Railroad Bridge and Newark Bay north to the Lehigh Valley Draw Bridge, and in the Hudson River, north to a line drawn east-west from the Holland Tunnel ventilator shaft at latitude 40°43.7′N; longitude, 74°01,6′W, and east to the Brooklyn Bridge.

Dated: August 27, 1993.

W.J. Ecker,

Rear Admiral, U.S. Coast Guard, Chief, Office of Navigation Safety and Waterway Services.

[FR Doc. 93–21304 Filed 8–31–93; 8:45 am]

BILLING CODE 4910–14–M

---

33 CFR Part 165

[COTP Wilmington, NC Regulation 93–004]

Safety Zone Regulations; Eagle Island Fireworks Display, Cape Fear River, Wilmington, NC

AGENCY: Coast Guard, DOT.

ACTION: Temporary final rule.

SUMMARY: The Coast Guard is establishing a safety zone in the Cape Fear River in the vicinity of the Battleship USS North Carolina Memorial in the waterfront area of downtown Wilmington, North Carolina. The safety zone is needed to protect people, vessels, and property from safety hazards associated with the launching of fireworks from Eagle Island. Entry into this zone is prohibited unless authorized by the Captain of the Port, Wilmington, North Carolina, or his designated representative.

EFFECTIVE DATE: This regulation is effective from 8 p.m. to 9:30 p.m. on October 2, 1993, unless sooner terminated by the Captain of the Port, Wilmington, North Carolina, or his designated representative. If inclement

weather causes the event to be postponed, this regulation will be effective from 8 p.m. to 9:30 p.m. on October 3, 1993, unless sooner terminated by the Captain of the Port.

FOR FURTHER INFORMATION CONTACT: LCDR R.W. Muth, USCG, c/o U.S. Coast Guard Captain of the Port, suite 500, 272 N. Front Street, Wilmington, North Carolina 28401–3907, Phone: (919) 343–4881.

SUPPLEMENTARY INFORMATION: In accordance with 5 U.S.C. 553, a notice of proposed rulemaking (NPRM) was not published for this regulation and good cause exists for making it effective in less than 30 days after **Federal Register** publication. Publishing an NPRM and delaying its effective date would be contrary to the public's interest since immediate action is necessary to prevent possible damage to people, vessels, and property in the area.

Drafting Information

The drafters of this regulation are LTJG G.A. Howard, project officer for the Captain of the Port, Wilmington, North Carolina, and LT J.B. Gately, project attorney, Fifth Coast Guard District Legal Staff.

Regulatory Evaluation

These regulations are considered to be non-major under Executive Order 12291 on Federal Regulation and nonsignificant under Department of Transportation regulatory policies and procedures (44 FR 11034; February 26, 1979).

Federalism Assessment

This action has been analyzed in accordance with the principles and criteria contained in Executive Order 12612, and it has been determined that it does not have sufficient federalism implications to warrant the preparation of a Federalism Assessment.

Discussion of Regulation

The City of Wilmington has requested that the Coast Guard provide a safety zone for the event. There will be a fireworks display over the Cape Fear River from 8:30 p.m. to 9 p.m. on October 2, 1993. The launching of commercial fireworks constitutes a potential hazard to the people, vessels, and property in the vicinity. This safety zone is needed to protect the public from the hazards associated with this event. It will consist of an area of water 200 yards wide and 667 yards long.

List of Subjects in 33 CFR Part 165

Harbors, Marine safety, Navigation (water), Reporting and recordkeeping requirement, Security measures, Waterways.

Regulation

In consideration of the foregoing, subpart F of part 165 of title 33, Code of Federal Regulations, is amended as follows:

PART 165—[AMENDED]

1. The authority citation for part 165 continues to read as follows:

Authority: 33 U.S.C. 1231; 50 U.S.C. 191; 33 CFR 1.05–1(g), 6.04–1, 6.04–6, and 160.5; 49 CFR 1.46.

2. A new § 165.T062 is added, to read as follows:

§ T165.062 Safety zone: Eagle Island Fireworks Display, Cape Fear River, Vicinity of the Battleship USS North Carolina, Wilmington, North Carolina.

(a) *Location:* The following area is a safety zone:

(1) The waters of the Cape Fear River circumscribed by a line drawn from the following navigational points:

Latitude	Longitude
34°14.2′ N	77°57.17′ W, to
34°14.2′ N	77°57.1′ W, to
34°13.9′ N	77°57.0′ W, thence to
34°13.9′ N	77°57.1′ W.

(2) The safety zone boundary can be described as follows: Starting at the stern of the Battleship USS North Carolina, across the Cape Fear River to the north end of the Coast Guard moorings, down along the east bank of the Cape Fear River to the bow of the tug Captain John Taxis Memorial (Chandler's Wharf), back across the Cape Fear River to Eagle Island, and then up along the west bank of the Cape Fear River to the stern of the Battleship USS North Carolina.

(b) *Effective Date.* This regulation is effective from 8 p.m. to 9:30 p.m. on October 2, 1993, unless sooner terminated by the Captain of the Port, Wilmington, North Carolina.

(c) *Local regulations.* Except for persons or vessels authorized by the Coast Guard Patrol Commander, no person or vessel may enter or remain in the regulated area.

(1) The operator of any vessel in the immediate vicinity of this safety zone shall:

(i) Stop the vessel immediately upon being directed to do so by any commissioned, warrant, or petty officer on board a vessel displaying a Coast Guard Ensign.

(ii) Proceed as directed by any commissioned, warrant, or petty officer on board a vessel displaying a Coast Guard Ensign.

(2) Any spectator vessel may anchor outside of the regulated area specified in paragraph (a) of the section,, but may not block a navigable channel.

(d) *Definitions.* The designated representative of the Captain of the Port is any Coast Guard commissioned, warrant, or petty officer who has been authorized by the Captain of the Port, Wilmington, North Carolina to act on his behalf. The following officers have or will be designated by the Captain of the Port: the Coast Guard Patrol Commander, the senior boarding officer on each vessel enforcing the safety zone, and the Duty Officer at the Marine Safety Office, Wilmington, North Carolina.

(1) The Captain of the Port and the Duty Officer at the Marine Safety Office, Wilmington, North Carolina, can be contacted at telephone number (919) 343–4895.

(2) The Coast Guard Patrol Commander and the senior boarding officer on each vessel enforcing the safety zone can be contacted on VHF–FM channels 16 and 81.

Dated: August 16, 1993.

C.F. Eisenbeis,

Captain, U.S. Coast Guard, Captain of the Port, Wilmington, NC.

[FR Doc. 93–21301 Filed 8–31–93; 8:45 am]

BILLING CODE 4910–14–M

---

33 CFR Part 165

RIN 2115–AA97

[COTP St. Louis Regulation 93–030]

Safety Zone Regulations; Upper Mississippi River Basin

AGENCY: Coast Guard, DOT.

ACTION: Temporary final rule.

SUMMARY: The Coast Guard is extending the duration of safety zones previously established on the Upper Mississippi River, the Missouri River, the Illinois River, Kasbaskia River, and the Meramec River. These regulations are needed to continue to control vessel traffic in the regulated areas to prevent further wake damage to levees and property along the rivers which have been subjected to flood conditions since June 1993. The regulations will restrict general navigation in the regulated areas for the safety of vessel traffic and the protection of life and property along the river.

EFFECTIVE DATE: This regulation is effective on August 16, 1993 and will terminate on September 15, 1993.

FOR FURTHER INFORMATION CONTACT: LT Tim Deal, Operations Officer, Captain of

the Port, St. Louis, Missouri at (314) 539–3823.

SUPPLEMENTARY INFORMATION:

Drafting Information

The drafters of these regulations are LT Tim Deal, Project Officer, Marine Safety Office, St. Louis, Missouri and LCDR A.O. Denny, Project Attorney, Second Coast Guard District Legal Office.

Regulatory History

In accordance with 5 U.S.C. 553, a notice of proposed rulemaking has not been published for this regulation and good cause exists for making it effective in less than 30 days from the date of publication. Following normal rulemaking procedures would have been impracticable. Specifically, the continuation of flood conditions and more rainfall in the Upper Mississippi drainage area have acted to maintain unanticipated flood conditions on the Mississippi River leaving insufficient time to publish a notice of proposed rulemaking. The Coast Guard it to be in the public's best interest to issue a regulation without waiting for a comment period since the flood conditions are presenting immediate hazards.

Background and Purpose

The Upper Mississippi River and its tributaries have suffered from high water conditions since April 1993 and flood conditions since June 1993. Although the flood levels crested in early August 1993, the waters have been slow to recede and are expected to rise again in local areas because of continuing rainfall. This has contributed to unusually wet conditions along the river with the resultant softening of the earth levees which protect the adjacent lowlands. As a result of the extended flood conditions, some levees in the area have failed, and flood waters have inundated thousands of acres for flood plain. The Army Corps of Engineers has reported that wake damage from river traffic may cause additional levees to erode, presenting a danger to ongoing flood relief efforts and to life and property along the river.

The flood conditions continue to present a hazard to navigation in that the area's rivers are contained by weak levees, are filled with debris which has created shoal waters in certain areas, have covered once visible obstructions to navigation, contain river currents which are not following normal patterns, and have insufficient clearance for vessels to pass under certain bridges. Taken as a whole, these conditions present hazards which greatly hinder the safe navigation of recreational and commercial traffic.

Given expected rainfall patterns, the rivers are not expected to recede to levels deemed safe for the resumption of unrestricted navigation until on or after September 15, 1993.

Regulatory Evaluation

This regulation is not major under Executive Order 12291 and not significant under Department of Transportation Regulatory Policies and Procedures (44 FR 11040; February 26, 1979), it will not have a significant economic impact on a substantial number of small entities, and it contains no collection of information requirements. A full regulatory analysis is unnecessary because the Coast Guard expects the impact of this regulation to be minimal when compared to the overriding nature of the damage which the flood conditions on the western rivers has caused and is expected to produce. To avoid any unnecessary adverse economic impact on businesses which use the river for commercial purposes, Captain of the Port, St. Louis, Missouri will monitor river conditions and will authorize entry into the safety zones for specific areas as river conditions allow.

Federalism Assessment

Under the principles and criteria of Executive Order 12612, this regulation does not raise sufficient federalism implications to warrant the preparation of a Federalism Assessment.

Environmental Assessment

The Coast Guard considered the environmental impact of this proposal and concluded that preparation of an environmental impact statement is not necessary because the regulation is categorically excluded from further environmental documentation. The regulation serves to avoid further damage to the environment beyond that which will result from naturally occuring flood conditions. A Categorical Exclusion Determination has been prepared and placed in the rulemaking docket.

List of Subject in 33 CFR Part 165

Harbors, Marine safety, Navigation (water), Reporting and recordkeeping requirements, Security measures, Waterways.

Temporary Regulation

In consideration of the foregoing, subpart C of part 165 of title 33, Code of Federal Regulations, is amended as follows:

PART 165—[AMENDED]

1. The authority citation for part 165 continues to read as follows:

Authority: 33 U.S.C. 1231; 50 U.S.C. 191; 49 CFR 1.46 and 33 CFR 1.05–1(g), 6.04–1, 6.04–6, and 160.5.

2. A temporary section 165.T0263 is added, to read as follows:

§ 165.T0263 Safety zone: Upper Mississippi River Basin.

(a) *Location.* The following areas are established as safety zones:

(1) Upper Mississippi River between miles 0.0 and 853.0,

(2) Missouri River between miles 0.0 and 185,

(3) Illinois River between miles 0.0 and 80.0,

(4) Meramec River between miles 0.0 and 21.0, and

(5) Kaskaskia River between miles 0.0 and 30.0

(b) *Effective dates.* This regulation becomes effective on August 16, 1993 and will terminate on September 15, 1993.

(c) *Regulations.* The general regulations under § 165.23 of this part which prohibit entry into the described zones without authority of the Captain of the Port apply.

(d) The Captain of the Port, St. Louis, Missouri will notify the maritime community of river conditions affecting the areas covers by these safety zones by Marine Safety Information Radio Broadcast (Broadcast Notice to Mariners) on VHF Marine Band Radio, Channel 22 (157.1 MHZ).

Dated: August 13, 1993.

Scott P. Cooper,

Commander, U.S. Coast Guard, Captain of the Port, St. Louis, Missouri.

[FR Doc. 93–21303 Filed 8–31–93; 8:45 am]

BILLING CODE 4910–14–M

ENVIRONMENTAL PROTECTION AGENCY

40 CFR Part 180

[PP 9F3802/R2011; FRL–4640–1]

RIN No. 2070–AB78

Pesticide Tolerances for Beta-(4-Chlorophenoxy)-Alpha-(1,1-Dimethylethyl)-1H-1,2,4-Triazole-1-Ethanol

AGENCY: Environmental Protection Agency (EPA).

ACTION: Final rule.

SUMMARY: This rule establishes tolerances for the combined residues of the fungicide, *beta*-(4-chlorophenoxy)-

alpha-(1,1-dimethylethyl)-1*H*-1,2,4-triazole-1-ethanol (hereafter referred to as triadimenol) and its butanediol metabolite, 4-(4-chlorophenoxy)-2,2-dimethyl-4-(1*H*-1,2,4-triazol-l-yl)-1,3-butanediol, calculated as parent, in or on the raw agricultural commodities (RACs) cottonseed and cotton forage. This rule to establish maximum permissible levels of combined residues of the pesticide and certain of its metabolites in or on the commodities was requested by Gustafson, Inc.

EFFECTIVE DATE: This regulation becomes effective September 1, 1993.

ADDRESSES: Written objections and/or a request for a hearing, identified by the document control number, [PP 9F3802/R2011], may be submitted to: Hearing Clerk (A-110), Environmental Protection Agency, Rm. 3708, 401 M St., SW., Washington, DC 20460.

FOR FURTHER INFORMATION CONTACT: By mail: Cynthia Giles-Parker, Product Manager (PM) 22, Registration Division, Environmental Protection Agency, 401 M St., SW., Washington, DC 20460. Office location and telephone number: Rm. 229, CM #2, 1921 Jefferson Davis Hwy., Arlington, VA 22202, (703-305-5540).

SUPPLEMENTARY INFORMATION: EPA issued a notice, published in the **Federal Register** of January 9, 1990 (55 FR 779), which announced that Gustafson, Inc., P.O. Box 660065, Dallas, TX 75266-0065, had submitted pesticide petition (PP) 9F3802 to EPA proposing the establishment of tolerances for the fungicide *beta*-(4-chlorophenoxy)-*alpha*-(1,1-dimethylethyl)-1*H*-1,2,4-triazole-1-ethanol, and its butanediol metabolite, 4-(4-chlorophenoxy)-2,2-dimethyl-4-(1*H*-1,2,4-triazol-l-yl)-1,3-butanediol, calculated as parent, in or on cottonseed at 0.02 part per million (ppm) and cotton forage at 0.02 ppm.

There were no comments received in response to the notice of filing.

The data submitted in support of the petitions and other relevant materials have been evaluated. The toxicological data considered in support of the tolerances include the following:

1. A 2-year feeding/carcinogenicity study with rats using dietary concentrations of 0, 125, 500, and 2,000 ppm, equivalent to 0, 6.25, 25.0, and 100 milligrams/kilogram (mg/kg) body weight (bwt)/day in males and females. Clinical chemistry findings suggest that the target organ for toxicity may be the liver. The levels of serum glutamic oxaloacetate transaminase (SGOT) and serum glutamic pyruvic transaminase (SGPT) were consistently higher at 2,000 ppm in males and females when compared to untreated controls, and some increase in these two parameters was also observed at 500 ppm. Although there was an accompanying small increase in liver weight at 2,000 ppm in females, there were no accompanying increases in histopathologic changes of the liver in either sex. There were only marginal effects seen on other clinical chemistry parameters, and no effect of the test compound was seen on clinically observed signs of toxicity, food consumption, hematology, or urinalysis parameters. The systemic no-observed-effect level (NOEL) is 125 ppm (6.25 mg/kg/day for males and females) based on the increase in liver enzymes (SGOT and SGPT). The systemic lowest-effect level (LEL) was 500 ppm (25 mg/kg/day for males and females). The chemical was not carcinogenic to rats under the testing conditions.

2. A 2-year chronic feeding/carcinogenicity study in mice using dietary concentrations of 0, 125, 500, and 2,000 ppm (equivalent to doses of 0, 18, 72, and 285 mg/kg/day for males and females). The results of blood chemistry, organ weights, and gross and histological examinations indicate that the liver is the target organ. There were time- and dose-related increases in serum alkaline phosphatase (SAP), SGOT, and SGPT activities in both male and female animals receiving 500 and 2,000 ppm of the test material.

In addition, increased incidence of enlarged livers, hyperplastic nodules, and increased liver weights in both male and female animals receiving 2,000 ppm of test material was detected at necropsy. Female animals receiving 2,000 ppm doses exhibited a significant increase in the incidence of liver adenomas only, a compound-related oncogenic effect which is discussed further below. In males, there were no differences in the incidence of these lesions in treated and control males, and the incidences of liver adenomas were similar to those observed in historical controls.

Based on blood chemistry findings, the systemic NOEL and the LEL are 125 and 500 ppm, respectively (equivalent to 18 and 72 mg/kg/day for males and females).

3. A 2-year male and female dog feeding study using doses of 0, 150, 600, and 2,400 ppm (equivalent to 0, 3.75, 15, and 60 mg/kg bwt/day for males and females). The NOEL is 150 ppm based on changes in enzyme levels (equivalent to 3.75 mg/kg bwt/day for males and females). The LEL is 600 ppm. Although there were significant decreases in mean body weights in males receiving 150 and 2,400 ppm and in females receiving 600 and 2,400 ppm, the biological significance of these changes could not be assessed. There were noted increases in alkaline phosphatase *N*-demethylase and cytochrome P-450 in males receiving 2,400 ppm, and significant increases in *N*-demethylase in females receiving 600 and 2,400 ppm, and in cytochrome P-450 in females receiving 2,400 ppm when compared to controls.

4. A 6-month dog-feeding study using doses of 0, 10, 30, and 100 ppm (equivalent to 0, 0.25, 0.75, and 2.5 mg/kg bwt/day for males and females). The NOEL was 2.5 mg/kg, the highest dose level tested (HDT).

5. A 3-month rat-feeding study using doses of 0, 150, 600, and 2,400 ppm (equivalent to 0, 7.5, 30, and 120 mg/kg bwt/day for males and females) demonstrated a decrease in body weight, in hematocrit values, and in eosinophil count and medium cell hemoglobin and demonstrated an increase in the high-dose group and a dose-related increase in liver weight. The NOEL is 7.5 mg/kg, and the LEL is 30 mg/kg.

6. A second 90-day rat-feeding study using doses of 0, 120, 600, and 3,000 ppm demonstrated piloerection lasting 1 month (month 1), decreases in body weight gain and feed efficiency lasting 1 week (week 1), alterations in serum lipids, increases in liver weight (absolute and relative) and in incidences of liver hypertrophy and fatty changes in the high-dose group, and an increase in the incidence of prostrate atrophy of slight severity in high-dose males. The NOEL was 600 ppm, equivalent to 39.6 mg/kg/day for males and 46.4 mg/kg/day for females, and the lowest-observed-effect level (LOEL) was the HDT, 3,000 ppm, equivalent to 208.5 mg/kg/day for males and 221.1 mg/kg/day for females.

7. A 3-month dog feeding study using doses of 0, 150, 600, and 2,400 ppm (equivalent to 0, 3.75, 15, and 60 mg/kg bwt/day for males and females). Weight gain in all male groups and in the highest dose female group was significantly less than the control. Alkaline phosphatase in males and females showed a dose-related negative trend. There were no gross pathological changes. Effects at 15 mg/kg included an increase in serum cholesterol level in males. Although the NOEL appeared to be less than 3.75 mg/kg, based on reduced body weight and decreased alkaline phosphatase in males, the Agency has concluded that effects below 15 mg/kg in the 2-year dog study were not biologically significant, and the longer-term study supersedes the 90-day dog study. Therefore, the NOEL remains at 3.75 mg/kg.

8. A rat developmental study using dose levels of 0, 30, 60, and 120 mg/kg/

day was determined to be core supplementary because the NOEL for developmental toxicity (supernumerary ribs) was not definitively established. The NOEL and LOEL for maternal toxicity for this study are 30 and 60 mg/kg/day, respectively, based on decreases in maternal body weight, body weight gain, and food consumption at 60 and 120 mg/kg/day. Increased embryo-lethality (embryotoxicity) was only observed at the highest dose level tested (120 mg/kg/day).

9. A repeat rat developmental study with a maternal NOEL of 5 mg/kg/day and a LOEL of 15 mg/kg/day due to decreased body weight gains, and with a developmental NOEL of 25 mg/kg/day and a LOEL of 60 mg/kg/day due to increased incidence of extra ribs.

10. A supplementary rabbit developmental study with a NOEL for maternal toxicity of 8 mg/kg and a maternal LEL of 40 mg/kg based on decreased body weight gains and food consumption. The developmental NOEL and LEL were 40 and 200 mg/kg, respectively.

11. A repeat rabbit developmental study with a maternal NOEL of 25 mg/kg/day and a LOEL of 125 mg/kg/day due to decreases in body weight gains and food consumption, and with a developmental NOEL of 125 mg/kg/day (HDT).

12. A reverse mutation assay (Ames), a dominant-lethal test in mice, DNA damage/repair, unscheduled DNA synthesis, *in vitro* and *in vivo* (rat) cytogenic assays, and a forward mutation in mice, all of which were negative for mutagenic effects.

13. A rat multi-generation reproduction study using doses of 0, 20, 100, and 500 ppm (equivalent to 0, 1, 5, and 25 mg/kg bwt/day for males and females) indicated that the NOEL and LOEL for both parental and pup toxicity are 100 and 500 ppm, respectively, based on significant body weight and organ weight changes. The NOEL for reproductive toxicity is 500 ppm, the highest dose level tested.

The Agency has concluded that the available data provide limited evidence of the carcinogenicity of triadimenol in mice and has classified the pesticide as a Category C carcinogen (possible human carcinogen with limited evidence of carcinogenicity in animals) in accordance with Agency guidelines, published in the **Federal Register** in 1986 (51 FR 33992). This evaluation was confirmed by the Agency's Scientific Advisory Panel on December 15, 1987 Based on a review of the Health Effects Division Peer Review Committee for Carcinogenicity of the Office of Pesticide Programs, the Agency has determined that a quantitative risk assessment is not appropriate for the following reasons:

1. The tumors observed were benign and observed in one sex (females) and were present only at the highest dose tested.

2. The chemical was not carcinogenic when administered in the diet to rats at dose levels ranging from 125 to 2,000 ppm.

3. The chemical was negative in the genotoxic assay battery. Based on this evidence, EPA concludes that triadimenol poses a negligible cancer risk to humans. The standard risk assessment approach of using the Reference Dose (RfD) based on systemic toxicity was applied to triadimenol. The provisional acceptable daily intake (PADI) based on the 2-year dog feeding studies (NOEL of 3.75 mg/kg bwt/day), and using a hundredfold uncertainty factor, is calculated to be 0.038 mg/kg bwt/day. The theoretical maximum residue contribution (TMRC) from previously established tolerances and the tolerance established here is 0.000448 mg/kg/day and utilizes 1.2 percent of the PADI for the U.S. population. For nonnursing infants and children, the TMRC will represent 2.8 and 2.6 percent of the PADI, respectively.

The nature of the residue is adequately understood. The residues of concern consist of the parent compound, *beta*-(4-chlorophenoxy)-*alpha*-(1,1-dimethylethyl)-1*H*-1,2,4-triazole-1-ethanol and its butanediol metabolite, 4-(4-chlorophenoxy)-2,2-dimethyl-4-(1*H*-1,2,4,-triazol-l-yl)-1,3-butanediol, calculated as parent. Based on a processing study, residues of triadimenol will not concentrate in processed cottonseed commodities, and a food or feed additive regulation is not required for triadimenol. Adequate analytical methods are available for enforcement purposes. Methods are available in the "Pesticide Analytical Manual," Vol. II (PAM II) for enforcement of the tolerances on livestock commodities. The method for plants has been submitted to the Food and Drug Administration for publication in PAM II. Because of the long lead time from establishing this tolerance to publication of the enforcement methodology in the PAM II, the analytical methodology is being made available in the interim to anyone interested in pesticide enforcement when requested from: Calvin Furlow, Public Information Branch, Field Operations Division (H7505C), Office of Pesticide Programs, Environmental Protection Agency, 401 M St., SW., Washington, DC 20460. Office location and telephone number: Rm. 246, CM #2, 1921 Jefferson Davis Hwy., Arlington, VA 22202, (703)-557-4432.

The pesticide is considered useful for the purposes for which the tolerances are sought. Based on the information and data considered, the Agency concludes that the establishment of the tolerances will protect the public health. Therefore, the tolerances are established as set forth below.

Any person adversely affected by this regulation may, within 30 days after publication of this document in the **Federal Register**, file written objections with the Hearing Clerk, at the address given above (40 CFR 178.20). The objections submitted must specify the provisions of the regulation deemed objectionable and the grounds for the objections (40 CFR 178.25). Each objection must be accompanied by the fees provided by 40 CFR 180.33(i). If a hearing is requested, the objections must include a statement of the factual issue(s) on which a hearing is requested, and the requestor's contentions on each such issue, and a summary of the evidence relied upon by the objection (40 CFR 178.27). A request for a hearing will be granted if the Administrator determines that the material submitted shows the following: There is a genuine and substantial issue of fact; there is a reasonable possibility that available evidence identified by the requestor would, if established, resolve one or more of such issues in favor of the requestor, taking into account uncontested claims or facts to the contrary; and resolution of the factual issue(s) in the manner sought by the requestor would be adequate to justify the action requested (40 CFR 178.32).

The Office of Management and Budget has exempted this rule from the requirements of section 3 of Executive Order 12291.

Pursuant to the requirements of the Regulatory Flexibility Act (Pub. L. 96-354, 94 Stat. 1164, 5 U.S.C. 601-612), the Administrator has determined that regulations establishing new tolerances or raising tolerance levels or establishing exemptions from tolerance requirements do not have a significant economic impact on a substantial number of small entities. A certification statement to this effect was published in the **Federal Register** of May 4, 1981 (46 FR 24950).

List of Subjects in 40 CFR Part 180

Administrative practice and procedure, Agricultural commodities, Pesticides and pests, Recording and recordkeeping requirements

Dated: August 18, 1993.

Douglas D. Campt,

Director, Office of Pesticide Programs.

Therefore, 40 CFR part 180 is amended as follows:

PART 180—[AMENDED]

1. The authority citation for part 180 continues to read as follows:

Authority: 21 U.S.C. 346a and 371.

2. Section 180.450 is amended in the paragraph (a) table by adding and alphabetically inserting the following raw agricultural commodities, to read as follows:

§ 180.450 Beta-(4-chlorophenoxy)-alpha-(1,1-dimethylethyl)-1H-1,2,4-triazole-1-ethanol; tolerances for residues.

(a) * * *

Commodity	Parts Per Million
* * * * *	
Cotton, forage	0.02
Cottonseed	0.02
* * * * *	

* * * * *

[FR Doc. 93-21248 Filed 8-31-93; 8:45 am]

BILLING CODE 6560-50-F

40 CFR Part 300

[FRL-4703-1]

National Oil and Hazardous Substances Contingency Plan; National Priorities List Update

AGENCY: Environmental Protection Agency.

ACTION: Notice of deletion of a site from the National Priorities List.

SUMMARY: The Environmental Protection Agency (EPA) announces the deletion of the U.S. Department of Agriculture Pesticide Lab, located in Yakima, Washington from the National Priorities List (NPL). The NPL is Appendix B of the National Oil and Hazardous Substances Contingency Plan (NCP), which EPA promulgated pursuant to Section 105 of the Comprehensive Environmental Response, Compensation, and Liability Act of 1980 (CERCLA) as amended. EPA and the State of Washington have determined that no further cleanup under CERCLA is appropriate. Moreover, EPA and the State of Washington have determined that remedial actions conducted under the Resource Conservation and Recovery Act (RCRA) at the site to date have been protective of public health, welfare, and the environment.

EFFECTIVE DATE: September 1, 1993.

FOR FURTHER INFORMATION CONTACT: Sean Sheldrake, Site Manager, U.S. Environmental Protection Agency, Region 10, 1200 6th Avenue, HW-113, Seattle, WA 98101, (206) 553-1220.

SUPPLEMENTARY INFORMATION: The site to be deleted from the NPL is: Pesticide Lab, Yakima, Washington.

A Notice of Intent to Delete for this site was published July 13, 1993 (58 FR 37693). The closing date for comments on the Notice of Intent to Delete was August 13, 1993. EPA received no comments.

EPA identifies sites which appear to present a significant risk to public health, welfare, or the environment and it maintains the NPL as the list of those sites. Sites on the NPL may be the subject of Hazardous Substance Response Trust Fund-financed remedial actions. Any site deleted from the NPL remains eligible for Fund-financed remedial actions in the unlikely event that conditions at the site warrant such action. Section 300.66(c)(8) of the NCP states that Fund-financed actions may be taken at sites deleted from the NPL. Deletion of a site from the NPL does not affect responsible party liability or impede Agency efforts to recover costs associated with response efforts.

List of Subjects in 40 CFR Part 300

Environmental protection, Hazardous waste.

For the reasons set out in the preamble, 40 CFR part 300 is amended as follows:

PART 300—[AMENDED]

1. The authority citation for part 300 continues to read as follows:

Authority: U.S.C. 9601-9657; 33 U.S.C. 1321(c) (2); E.O. 12777, 56 FR 54757, 3 CFR 1991 Comp., p. 351; E.O. 12580, 52 FR 2923, 3 CFR, 1987 Comp., p. 193.

Appendix B—[Amended]

2. Table 1 of appendix B to part 300 is amended by removing the site for "Pesticide Lab, Yakima, Washington" and by revising the total number sites from 1,078 to read, 1,077.

Dated: August 23, 1993.

Gerald A. Emison,

Acting Regional Administrator, U.S. EPA Region 10.

[FR Doc. 93-21253 Filed 8-31-93; 8:45 am]

BILLING CODE 6560-50-M

40 CFR Parts 180 and 185

[OPP-300260A; FRL-4077-9]

RIN 2070-AB78

Toxaphene; Revocation of Tolerances

AGENCY: Environmental Protection Agency (EPA).

ACTION: Final rule.

SUMMARY: This document revokes the tolerances, interim tolerances, and food additive regulations listed in 40 CFR 180.138, 180.319, and 185.5750, respectively, of the insecticide toxaphene (chlorinated camphene containing 67 to 69 percent chlorine) in or on various raw agricultural commodities, milk, and crude soybean oil. EPA initiated this action because all registered uses of toxaphene on food commodities have been canceled, and all existing stocks provisions expired on March 1, 1990.

EFFECTIVE DATE: This regulation becomes effective September 1, 1993.

ADDRESSES: Written objections, identified by the document control number [OPP-300260A], may be submitted to: Hearing Clerk (A-110), Environmental Protection Agency, Rm. 3708, 401 M St., SW., Washington, DC 20460.

FOR FURTHER INFORMATION CONTACT: By mail: Tina Levine, Registration Division (H-7505W), Environmental Protection Agency, 401 M St., SW., Washington, DC 20460. Office location and telephone number: 6th Floor, Crystal Station I, 2800 Crystal Drive, Arlington, VA 22202, (703)-308-8393.

SUPPLEMENTARY INFORMATION: EPA issued a proposed rule, published in the **Federal Register** of November 12, 1992 (57 FR 53676), which proposed to revoke the tolerances, interim tolerances, and food additive regulations for residues of toxaphene in or on various raw agricultural commodities, milk, and crude soybean oil established under sections 408 and 409 of the Federal Food, Drug, and Cosmetic Act (21 U.S.C. 346a and 348) listed in 40 CFR 180.138, 180.319, and 185.5750.

No public comments or requests for referral to an advisory committee were received in response to the notice of proposed rulemaking.

Therefore, based on the information considered by the EPA and discussed in detail in the November 12, 1992 proposal and in this final rule, the Agency is hereby revoking the tolerances listed in 40 CFR 180.138, 180.319, and 185.5750 for residues of toxaphene in or on alfalfa hay, apples,

apricots, bananas, barley, beans, blackberries, boysenberries, broccoli, brussels sprouts, cabbage, carrots, cauliflower, celery, citrus fruits, collards, corn, cottonseed, cranberries, cucumbers, dewberries, eggplants; fat of meat from cattle, goats, hogs, horses, and sheep; hazelnuts, hickory nuts, horseradish, kale, kohlrabi, lettuce, loganberries, nectarines, oakra, oats, onions, parsnips, peaches, peanuts, pears, peas, pecans, peppers, pimentos, pineapples, quinces, radishes or radish tops, raspberries, rice, rye, rutabagas, sorghum grain, soybeans, crude soybean oil, spinach, strawberries, sunflower seeds, tomatoes, walnuts, wheat, youngberries; and milk.

Since all use of toxaphene was prohibited after March 1, 1990, EPA believes there has been adequate time for legally treated agricultural commodities to have gone through the channels of trade. Although toxaphene is a persistent chemical, monitoring data from the Food and Drug Administration indicate that no action levels are needed.

Any person adversely affected by this regulation may, within 30 days after publication of this document in the **Federal Register**, file written objections and/or a request for a hearing with the Hearing Clerk, at the address given above (40 CFR 178.20). The objections submitted must specify the provisions of the regulation deemed objectionable and the grounds for the objections (40 CFR 178.25). Each objection must be accompanied by the fee prescribed by 40 CFR 180.33(i). If a hearing is requested, the objections must include a statement of factual issue(s) on which the hearing is requested, the requestor's contentions on each issue, and a summary of any evidence relied upon by the objector (40 CFR 178.27). A request for a hearing will be granted if the Administrator determines that the material submitted shows the following: There is a genuine and substantial issue of fact; there is a reasonable possibility that available evidence identified by the requestor would, if established, resolve one or more of such issues in favor of the requestor, taking into account uncontested claims or facts to the contrary; and resolution of the factual issue(s) in the manner sought by the requestor would be adequate to justify the action requested. (40 CFR 178.32).

This document has been reviewed by the Office of Management and Budget as required by section 3 of Executive Order 12291.

Executive Order 12291

As explained in the proposal published November 12, 1992, the Agency has determined, pursuant to the requirements of Executive Order 12291, that the removal of these tolerances will not cause adverse economic impact on significant portions of U.S. enterprises.

Regulatory Flexibility Act

This rulemaking has been reviewed under the Regulatory Flexibility Act of 1980 (Pub. L. 96-354, 94 Stat. 1164, 5 U.S.C. 601 et seq.), and it has been determined that it will have no economic impact on a substantial number of small businesses, small governments, or small organizations. The reasons for this conclusion are discussed in the November 12, 1992 proposal.

List of Subjects in 40 CFR Parts 180 and 185

Administrative practice and procedure, Agricultural commodities, Food additives, Pesticides and pests, Reporting and recordkeeping requirements.

Dated: August 18, 1993.

Susan H. Wayland,

Acting Assistant Administrator for Prevention, Pesticides and Toxic Substances.

Therefore, 40 CFR part 180 is amended as follows:

PART 180—[AMENDED]

1. In part 180:

a. The authority citation for part 180 continues to read as follows:

Authority: 21 U.S.C. 346a and 371.

§ 180.138 [Removed]

b. By removing § 180.138 *Toxaphene; tolerances for residues.*

§ 180.319 [Amended]

c. In § 180.319 *Interim tolerances* by removing the entry "Toxaphene (chlorinate camphene 67-69% chlorine)" from the table therein.

PART 185—[AMENDED]

2. In part 185:

a. The authority citation for part 185 continues to read as follows:

Authority: 21 U.S.C. 348.

§ 185.5750 [Removed]

b. By removing § 185.5750 *Toxaphene.*

[FR Doc. 93-20972 Filed 8-31-93; 8:45 am]

BILLING CODE 6560-50-F

GENERAL SERVICES ADMINISTRATION

41 CFR Part 101-49

[FPMR Amendment H-188]

Utilization, Donation, and Disposal of Foreign Gifts and Decorations

AGENCY: Federal Supply Service, GSA.

ACTION: Final rule.

SUMMARY: This regulation redefines "minimal value" for foreign gifts based on the increase in the Department of Labor Consumer Price Index report of September 30, 1992. Public Law 95-105 requires that the term "minimal value" associated with the receipt and retention of foreign gifts by employees be redefined at 3-year intervals to reflect changes in the consumer price index for the immediately preceding 3-year period. This final rule redefines "minimal value".

EFFECTIVE DATE: January 1, 1993.

FOR FURTHER INFORMATION CONTACT:

Lester D. Gray, Jr., Director, Property Management Division (703-305-7240).

SUPPLEMENTARY INFORMATION: The General Services Administration (GSA) has determined that this rule is not a major rule for the purposes of Executive Order 12291 of February 17, 1981, because it is not likely to result in an annual effect on the economy of $100 million or more; a major increase in costs to consumers or others; or significant adverse effects. GSA has based all administrative decisions underlying this rule on adequate information concerning the need for and consequences of this rule; has determined that the potential benefits to society from this rule outweigh the potential costs and has maximized the net benefits; and has chosen the alternative approach involving the least net cost to society.

Regulatory Flexibility Act

This final rule is not required to be published in the **Federal Register** for notice and comment. Therefore, the Regulatory Flexibility Act does not apply.

List of Subjects in 41 CFR Part 101-49

Decorations, medals, and awards; Government property; Government property management.

For the reasons set out in the preamble, 41 CFR part 101-49 is amended as follows:

PART 101–49—UTILIZATION, DONATION, AND DISPOSAL OF FOREIGN GIFTS AND DECORATIONS

1. The authority citation for part 101–49 continues to read as follows:

Authority: Sec. 205(c), 63 Stat. 390 (40 U.S.C. 486(c)); sec. 515, 91 Stat. 862 (5 U.S.C. 7342).

2. Section 101–49.001–5 is amended by revising the introductory text to read as follows:

§ 101–49.001–5 Minimal value.

Minimal value means a retail value in the United States at the time of acceptance of $225 or less, except that:

* * * * *

Dated: July 13, 1993.

Roger W. Johnson,

Administrator of General Services.

[FR Doc. 93–21174 Filed 8–31–93; 8:45 am]

BILLING CODE 6820–24–M

DEPARTMENT OF HEALTH AND HUMAN SERVICES

Refugee Resettlement Office

45 CFR Part 400

Refugee Resettlement Program: Refugee Cash Assistance and Refugee Medical Assistance

AGENCY: Office of Refugee Resettlement, Administration for Children and Families (ACF), HHS.

ACTION: Final rule.

SUMMARY: This rule amends current rules to continue the duration of the special programs of refugee cash assistance (RCA) and refugee medical assistance (RMA) for a refugee's first 8 months in Federal FY 1994. If a regulation is not issued, funds for RCA and RMA are expected to be insufficient under current policy to provide support during the latter months of FY 1994, seriously jeopardizing the health and safety of refugees who are not eligible for AFDC, Medicaid, or SSI.

EFFECTIVE DATE: October 1, 1993.

ADDRESSES: Office of Refugee Resettlement, Administration for Children and Families, Department of Health and Human Services, 370 L'Enfant Promenade, Washington, DC 20447.

FOR FURTHER INFORMATION CONTACT: Toyo A. Biddle, (202) 401–9253.

SUPPLEMENTARY INFORMATION:

Background

Current regulations at 45 CFR 400.203(b) and 400.204(b) provide for Federal refugee funding, subject to the availability of funds (45 CFR 400.202), to be provided to States for the special programs of refugee cash assistance (RCA) and refugee medical assistance (RMA) "during the 12-month period (except during Federal FY 1993, 8-month period) beginning with the first month the refugee entered the United States."

Description of the Proposed Regulation

The Department expects that funds will not be sufficient in FY 1994 to provide RCA and RMA for more than the 8-month level currently in effect for FY 1993. The Department anticipates that appropriations for the refugee program for FY 1994 will not be at a level which enables coverage of more than 8 months of RCA and RMA and, therefore, will not be sufficient to sustain a 12-month RCA/RMA eligibility period to which the program would revert in FY 1994 in the absence of additional regulatory action. When the FY 1994 appropriation for the refugee program is enacted, if the appropriation level is either insufficient to maintain 8 months of RCA/RMA coverage throughout the fiscal year or allows more than 8 months of coverage, ORR will notify States of the new RCA/RMA eligibility period.

The Department considers it of the utmost importance to provide refugee support at a level that does not exceed available funds. Failure to do so would result in an insufficient level of support during the latter months of FY 1994, seriously jeopardizing the health and welfare of an estimated 30,000 needy refugees who are not eligible for AFDC, Medicaid, or SSI.

This rule will address this issue by continuing in FY 1994 the current 8-month period of RCA/RMA eligibility, thereby reducing costs and helping to assure the availability of refugee cash and medical support throughout the entire year.

Consistent with the preceding actions, 45 CFR 400.2, 400.60(b), 400.100(b), 400.203(b), 400.204(b), and 400.209(b) are being amended to continue the duration of RCA and RMA for a refugee's first 8 months in the U.S. during FY 1994.

Justification for Dispensing With Notice of Proposed Rulemaking

A period for public comment is not being provided because it would be impracticable, unnecessary, and not in the public interest for the following reasons:

Under the current statute and regulations, the duration of benefits is a function of the level of appropriations. Congressional funding limitations effectively establish the eligibility period, rendering notice of proposed rulemaking and comment procedures unnecessary.

Because there is a continuing flow of refugees into the United States and because continuing costs for RCA and RMA are being incurred by the States, any delays in maintaining the 8-month period of time-eligibility would result in the need for ever-greater reductions in the RCA and RMA programs in order to avoid the abrupt and complete termination of such assistance to both current and newly arriving refugees.

Accordingly, the agency finds good cause for issuance of an immediately effective final rule.

Regulatory Procedures

Regulatory Impact Analysis

Executive Order 12291 requires that a regulatory impact analysis be prepared for major rules, which are defined in the Order as any rule that has an annual effect on the national economy of $100 million or more, or certain other specified effects. The Department has determined that these rules are not major rules within the Executive Order because they will not have an annual effect on the economy of $100 million or more; nor will they result in a major increase in costs or prices for consumers, any industries, any governmental agencies, or any geographic region; and, they will not have an adverse effect on competition, employment, investment, productivity, innovation, or on the ability of the United States-based enterprises to compete with foreign-based enterprises in domestic or import markets.

Regulatory Flexibility Act

The Regulatory Flexibility Act (Pub. L. 96–354) requires the Federal government to anticipate and reduce the impact of regulations and paperwork requirements on small businesses. The primary impact of these rules is on State governments and individuals. Therefore, we certify that these rules will not have a significant impact on a substantial number of small entities because they affect benefits to individuals and payments to States. Thus, a regulatory flexibility analysis is not required.

Paperwork Reduction Act

This rule does not contain collection-of-information requirements.

Statutory Authority

Section 412(a)(9) of the Immigration and Nationality Act, 8 U.S.C. 1522(a)(9), authorizes the Secretary of HHS to issue

regulations needed to carry out the program.

[Catalogue of Federal Domestic Programs: 93.566, Refugee and Entrant Assistance—State-Administered Programs]

List of Subjects in 45 CFR Part 400

Grant programs—Social programs, Health care, Public assistance programs, Refugees, Reporting and recordkeeping requirements.

Dated: August 13, 1993.

Laurence J. Love,

Acting Assistant Secretary for Children and Families.

Approved: August 23, 1993.

Donna E. Shalala,

Secretary, Department of Health and Human Services.

For the reasons set forth in the preamble, 45 CFR part 400 is amended as follows:

PART 400—REFUGEE RESETTLEMENT PROGRAM

1. The authority citation for part 400 continues to read as follows:

Authority: Section 412(a)(9), Immigration and Nationality Act (8 U.S.C. 1522(a)(9)).

§ 400.2 [Amended]

2. Section 400.2 is amended in the definitions of "Refugee cash assistance" and "Refugee medical assistance" by removing the words "(except during Federal FY 1993, less than an 8-month period)" and by adding in their place "(except during Federal FY 1994, less than an 8-month period)".

§§ 400.60(b) and 400.100(b) [Amended]

3. Sections 400.60(b) and 400.100(b) are amended by removing the words "(except during Federal FY 1993, 8-month period)" and adding in their place "(except during Federal FY 1994, 8-month period)".

§§ 400.203(b) and 400.204(b) [Amended]

4. Sections 400.203(b) and 400.204(b) are amended by removing the words "(except during Federal FY 1993, 8-month period)" and adding in their place "(except during Federal FY 1994, 8-month period)".

§ 400.209(b) [Amended]

5. Section 400.209(b) is amended by removing the words "(except during Federal FY 1993, 8 months)" and adding in their place "(except during Federal FY 1994, 8 months)."

[FR Doc. 93–21349 Filed 8–31–93; 8:45 am]

BILLING CODE 4184–01–M

FEDERAL COMMUNICATIONS COMMISSION

47 CFR Part 73

[MM Docket No. 93–90; RM–8198]

Radio Broadcasting Services; Toledo, Oregon

AGENCY: Federal Communications Commission.

ACTION: Final rule.

SUMMARY: The Commission, at the request of AGPAL Broadcasting Co., substitutes Channel 264C2 for Channel 264A at Toledo, Oregon, and modifies the license of Station KZUS to specify operation on the higher class channel. See 58 FR 21137, April 19, 1993. Channel 264C2 can be allotted to Toledo in compliance with the Commission's minimum distance separation requirements with a site restriction of 7.9 kilometers (4.9 miles) northwest, at coordinates North Latitude 44–39–01 and West Longitude 124–01–42, to avoid a short-spacing to Station KICE, Channel 264C1, Bend, Oregon. With this action, this proceeding is terminated.

EFFECTIVE DATE: October 12, 1993.

FOR FURTHER INFORMATION CONTACT: Leslie K. Shapiro, Mass Media Bureau, (202) 634–6530.

SUPPLEMENTARY INFORMATION: This is a synopsis of the Commission's Report and Order, MM Docket No. 93–90, adopted August 9, 1993, and released August 26, 1993. The full text of this Commission decision is available for inspection and copying during normal business hours in the FCC Reference Center (room 239), 1919 M Street, NW., Washington, DC. The complete text of this decision may also be purchased from the Commission's copy contractor, International Transcription Service, Inc., (202) 857–3800, 2100 M Street, NW., Suite 140, Washington, DC 20037.

List of Subjects in 47 CFR Part 73

Radio Broadcasting.

47 CFR Part 73—[AMENDED]

1. The authority citation for part 73 continues to read as follows:

Authority: 47 U.S.C. 154, 303.

§ 73.202 [Amended]

2. Section 73.202(b), the Table of FM Allotments under Oregon, is amended by removing Channel 264A and adding Channel 264C2 at Toledo.

Federal Communications Commission.

Michael C. Ruger,

Chief, Allocations Branch, Policy and Rules Division, Mass Media Bureau.

[FR Doc. 93–21161 Filed 8–31–93; 8:45 am]

BILLING CODE 6712–01–M

47 CFR Part 73

Radio Broadcasting Services; Various Locations

AGENCY: Federal Communications Commission.

ACTION: Final rule.

SUMMARY: The Commission, on its own motion, amends the Table of FM Allotments to specify the correct classes of channels allotted to various communities. These amendments are necessary to reflect changes that have been authorized in response to applications filed by licensees and permittees operating on these channels. This action constitutes an editorial change in the Table of FM Allotments. Therefore, a public notice and comment proceeding is unnecessary. See 5 U.S.C. 553(b) (A) and (B). With this action, this proceeding is terminated.

EFFECTIVE DATE: September 1, 1993.

FOR FURTHER INFORMATION CONTACT: Michael Ruger, Mass Media Bureau, (202) 634–6530.

SUPPLEMENTARY INFORMATION: This is a synopsis of the Commission's Report and Order, adopted August 6, 1993, and released August 26, 1993. The full text of this Commission decision is available for inspection and copying during normal business hours in the FCC's Reference center (room 239), 1919 M Street, NW., Washington, DC. The complete text of this decision may also be purchased from the Commission's copy contractor, International Transcription Service, Inc., (202) 857–3800, 2100 M Street, NW., Suite 140, Washington, DC 20037.

List of Subjects in 47 CFR Part 73

Radio Broadcasting.

47 CFR Part 73—[AMENDED]

1. The authority citation for part 73 continues to read as follows:

Authority: 47 U.S.C. 154, 303.

§ 73.202 [Amended]

2. Section 73.202(b), the Table of FM Allotments under Alaska, is amended by removing Channel 266C2 and adding Channel 266A at Kodiak.

3. Section 73.202(b), the Table of FM Allotments under Arkansas, is amended by removing Channel 226C and adding

Channel 226C1 at Batesville, by removing Channel 274C2 and adding Channel 274C3 at North Crossett, by removing Channel 285C2 and adding Channel 285A at Springdale, and by removing Channel 274C2 and adding Channel 274C3 at Van Buren.

4. Section 73.202(b), the Table of FM Allotments under California, is amended by removing Channel 296B1 and adding Channel 296A at Seaside, and by removing Channel 285B1 and adding Channel 285A at Tipton.

5. Section 73.202(b), the Table of FM Allotments under Colorado, is amended by removing Channel 300C and adding Channel 300C1 at Fort Collins.

6. Section 73.202(b), the Table of FM Allotments under Florida, is amended by removing Channel 300C and adding Channel 300C1 at Panama City, and by removing Channel 284C and adding Channel 284C1 at Tampa.

7. Section 73.202(b), the Table of FM Allotments under Garapan, is amended by removing Channel 258C and adding Channel 258C1 at Saipan.

8. Section 73.202(b), the Table of FM Allotments under Georgia, is amended by removing Channel 286C2 and adding Channel 286C3 at Blackshear.

9. Section 73.202(b), the Table of FM Allotments under Hawaii, is amended by removing Channel 284C and adding Channel 284C2 at Lanai City.

10. Section 73.202(b), the Table of FM Allotments under Kansas, is amended by removing Channel 231C and adding Channel 231C2 at Downs, and by removing Channel 294C1 and adding Channel 294A at Norton.

11. Section 73.202(b), the Table of FM Allotments under Louisiana, is amended by removing Channel 252C1 and adding Channel 252C2 at West Monroe.

12. Section 73.202(b), the Table of FM Allotments under Michigan, is amended by removing Channel 290C and adding Channel 290C1 at Charlevoix.

13. Section 73.202(b), the Table of FM Allotments under Minnesota, is amended by removing Channel 290C2 and adding Channel 290C3 at Red Wing.

14. Section 73.202(b), the Table of FM Allotments under Mississippi, is amended by removing Channel 267C and adding Channel 267C1 at Meridian.

15. Section 73.202(b), the Table of FM Allotments under Nebraska, is amended by removing Channel 300C1 and adding Channel 300C2 at West Point.

16. Section 73.202(b), the Table of FM Allotments under Nevada, is amended by removing Channel 237C and adding Channel 237C1 at Elko.

17. Section 73.202(b), the Table of FM Allotments under New Mexico, is amended by removing Channel 266C2 and adding Channel 266C3 at White Rock.

18. Section 73.202(b), the Table of FM Allotments under North Dakota, is amended by removing Channel 266C1 and adding Channel 266C2 at Valley City and by removing Channel 262C and adding Channel 262C1 at Wishek.

19. Section 73.202(b), the Table of FM Allotments under Oklahoma, is amended by removing Channel 300C2 and adding Channel 300A at Altus.

20. Section 73.202(b), the Table of FM Allotments under Oregon, is amended by removing Channel 234C3 and adding Channel 234A at Rouge River.

21. Section 73.202(b), the Table of FM Allotments under Texas, is amended by removing Channel 225C and adding Channel 225C1 at Wichita Falls, by removing Channel 277C and adding Channel 277C1 at Wichita Falls, and by removing Channel 249C2 and adding Channel 249C3 at Winfield.

22. Section 73.202(b), the Table of FM Allotments under Washington, is amended by removing Channel 296C2 and adding Channel 296C3 at Deer Park, and by removing Channel 270C2 and adding Channel 270C3 at Medical Lake.

23. Section 73.202(b), the Table of FM Allotments under Wisconsin, is amended by removing Channel 222C3 and adding Channel 222A at Clintonville, by removing Channel 222C3 and adding Channel 222A at Hayward, and by removing Channel 240C1 and adding Channel 240C3 at Minocqua.

Federal Communications Commission

Michael C. Ruger,

Chief, Allocations Branch, Policy and Rules Division, Mass Media Bureau.

[FR Doc. 93-21165 Filed 8-31-93; 8:45 am]

BILLING CODE 6712-01-M

DEPARTMENT OF DEFENSE

48 CFR Parts 232 and 252

Defense Federal Acquisition Regulation Supplement; Incremental Funding of Fixed-Price Contracts

AGENCY: Department of Defense (DOD).

ACTION: Interim rule with request for comments.

SUMMARY: The Director of Defense Procurement has issued an interim rule that revises the Defense Federal Acquisition Regulation Supplement to establish a formal DoD policy on funding fixed-price contracts, to prescribe limitations on the use of incrementally funded fixed-price contracts, and to provide a standard clause for use in incrementally funded fixed-price contracts.

DATES: *Effective Date:* August 23, 1993.

Comment Date: Comments on the interim rule should be submitted in writing at the address shown below on or before October 1, 1993, to be considered in the formulation of the final rule. Please cite DAR Case 90-037 in all correspondence.

ADDRESSES: Interested parties should submit written comments to: Defense Acquisition Regulations Council, ATTN: Mr. Eric Mens, OUSD(A)DP, 3062 Defense Pentagon, Washington, DC 20301-3062. Telefax Number (703) 697-9845.

FOR FURTHER INFORMATION CONTACT: Mr. Eric Mens, (703) 697-7266.

SUPPLEMENTARY INFORMATION:

A. Background

Incrementally funded fixed-price contracts have been used in limited situations throughout DoD for a number of years. This technique has permitted DoD to award fixed-price contracts and to initiate work in specific circumstances where full funding was not available (e.g. contracts funded with research and development appropriations, etc.), precluding the need to use a cost-type contract when the nature of the requirement was more suitable for a fixed-price contract. To support the use of this technique, a number of nonstandard clauses had been developed for use in the Services and agencies. In recognition of the need for a standard clause for such contracts, the Defense Acquisition Regulations Council developed language and a clause for inclusion in the Defense Federal Acquisition Regulation Supplement (DFARS) that, while maintaining the preference for full funding of fixed-price contracts, would permit the use of incremental funding in clearly defined and limited situations.

The interim rule amends DFARS 232 and 252 to establish specific situations where incremental funding of fixed-price contracts would be appropriate. Under this rule, the use of incrementally funded fixed-price contracts is limited to situations where the contract is funded with research and development (R&D) funds; where Congress has incrementally appropriated program funds; or where the head of the contracting activity has approved the use of incremental funding for either base services or hazardous/toxic waste remediation contracts. A new clause at 252.232-7007, Limitation of Government's Obligation, identifies procedures for incrementally funding the contract and requires the contractor

to provide the Government with written notice when the work will reach the point at which the amount payable by the Government, including any termination costs, approximates 85 percent of the funds currently allotted to the contract.

B. Regulatory Flexibility Act

The Regulatory Flexibility Act, 5 U.S.C. 601 *et seq.*, applies but the interim rule is not expected to have a significant economic impact on a substantial number of small entities. An Initial Regulatory Flexibility Analysis (IRFA) has been performed and a copy has been submitted to the Chief Counsel for Advocacy of the Small Business Administration. The IRFA states that while a substantial number of small businesses which are awarded fixed-price contracts for R&D, base services, and hazardous/toxic waste remediation may be impacted (estimated at 39 percent), the DoD expects that the economic impact on such entities will not be significant. This is because the rule places little cost risk on the contractor. While the interim rule establishes a clear preference for fully funding fixed-price contracts, it also creates a standard clause to be used in clearly defined and limited circumstances to permit DoD to award, and the contractor to begin work under, a contract prior to the availability of full funding. The interim rule requires that the contract be fully funded as soon as the full amount of funds are made available. Under the rule, there is no requirement for the contractor to perform beyond the available funds allotted to the contract and the rule provides specific protections to the contractor until full funding is provided. The economic impact on small entities is also expected to be minimal with regard to the reporting requirement of the clause because the type of accounting data which is needed to make a determination concerning the timing of the required notice is data which is generally already available under contract cost/funds reporting procedures as well as part of the normal conduct of business (e.g. data on labor and material costs, accounts receivable and payable, cash flow, profit/loss projections, estimates at completion, etc.). A copy of the IRFA may be obtained from Mr. Eric Mens, telephone number (703) 697–7266 or telefax number (703) 697–9845. Comments from small entities concerning the affected DFARS subpart will be considered in accordance with section 610 of the Act. Such comments must be submitted separately and cite 5 U.S.C. 610 (DAR Case 90–037) in correspondence.

C. Paperwork Reduction Act

The Paperwork Reduction Act (Pub. L. 96–511) applies because the interim rule imposes a new reporting requirement which requires the approval of OMB under 44 U.S.C. 3501 *et seq.* DoD has submitted a request for expedited OMB approval of this new information collection requirement.

D. Determination To Issue an Interim Rule

A determination has been made under the authority of the Secretary of Defense to issue this rule as an interim rule. Urgent and compelling reasons exist to promulgate this rule before affording the public an opportunity to comment. The lack of a standard clause for use in incrementally funded fixed-price contracts may seriously impair the ability of DoD components to support mission requirements by precluding the award of fixed-price contracts in circumstances where full funding is not available. Therefore, it is essential that guidance be issued as expeditiously as possible.

List of Subjects in 48 CFR Parts 232 and 252

Government procurement.

Claudia L. Naugle,

Deputy Director, Defense Acquisition Regulations Council.

Therefore, 48 CFR parts 232 and 252 are amended as follows:

1. The authority citation for 48 CFR parts 233 and 252 is revised to read as follows:

Authority: 41 U.S.C. 421 and FAR subpart 1.3.

PART 232—CONTRACT FINANCING

2. A new subpart 232.7 is added to read as follows:

Subpart 232.7—Contract Funding

Sec.

232.702 Policy.
232.703 Contract funding requirements.
232.703–1 General.
232.704 Limitation of cost or funds.
232.704–70 Incrementally funded fixed-price contracts.
232.705 Contract clauses.
232.705–70 Clause for limitation of Government's obligation.

Subpart 232.7—Contract Funding

232.702 Policy.

Fixed-price contracts shall be fully funded except as permitted by 232.703–1.

232.703 Contract funding requirements.

232.703–1 General.

(1) A fixed-price contract may be incrementally funded only if—

(i) The contract is funded with research and development appropriations;

(ii) Congress has otherwise incrementally appropriated program funds; or

(iii) The head of the contracting activity approves the use of incremental funding for either base services contracts or hazardous/toxic waste remediation contracts.

(2) Incrementally funded fixed-price contracts shall be fully funded as soon as practicable after full funding is available.

232.704 Limitation of cost or funds.

232.704–70 Incrementally funded fixed-price contracts.

(a) Upon receipt of the contractor's notice under paragraph (c) of the clause at 252.232–7007, Limitation of Government's Obligation, the contracting officer shall promptly provide written notice to the contractor that the Government is—

(1) Allotting additional funds for continued performance and increasing the Government's limitation of obligation in a specified amount;

(2) Terminating the contract; or

(3) Considering whether to allot additional funds; and

(i) The contractor is entitled by the contract terms to stop work when the Government's limitation of obligation is reached; and

(ii) Any costs expended beyond the Government's limitation of obligation are at the contractor's risk.

(b) Upon learning that the contract will receive no further funds, the contracting officer shall promptly give the contractor written notice of the Government's decision and terminate for the convenience of the Government.

(c) The contracting officer shall ensure that, in accordance with paragraph (b) of the clause at 252.232–7007, Limitation of Government's Obligation, sufficient funds are allotted to the contract to cover the total amount payable to the contractor in the event of termination for the convenience of the Government.

232.705 Contract clauses.

232.705–70 Clause for limitation of Government's obligation.

Use the clause at 252.232–7007, Limitation of Government's Obligation, in solicitations and resultant incrementally funded fixed-price

contracts. The contracting officer may revise the contractor's notification period, in paragraph (c) of the clause, from "ninety" to "thirty" or "sixty" days, as appropriate.

PART 252—SOLICITATION PROVISIONS AND CONTRACT CLAUSES

3. Section 252.232–7007 is added to read as follows:

252.232–7007 Limitation of Government's obligation.

As prescribed in 232.705–70, use the following clause:

Limitation of Government's obligation (Aug. 1993)

(a) Contract line item(s) _____* through _____* are incrementally funded. For these item(s), the sum of $_____* of the total price is presently available for payment and allotted to this contract. An allotment schedule is set forth in paragraph (i) of this clause.

(b) For item(s) identified in paragraph (a) of this clause, the Contractor agrees to perform up to the point at which the total amount payable by the Government, including reimbursement in the event of termination of those item(s) for the Government's convenience, approximates the total amount currently allotted to the contract. The Contractor will not be obligated to continue work on those item(s) beyond that point. The Government will not be obligated in any event to reimburse the Contractor in excess of the amount allotted to the contract for those item(s) regardless of anything to the contrary in the clause entitled "Termination for Convenience of the Government." As used in this clause, the total amount payable by the Government in the event of termination of applicable contract line item(s) for convenience includes costs, profit, and estimated termination settlement costs for those items(s).

(c) Notwithstanding the dates specified in the allotment schedule in paragraph (i) of this clause, the Contractor will notify the Contracting Officer in writing at least ninety days prior to the date when, in the Contractor's best judgment, the work will reach the point at which the total amount payable by the Government, including any cost for termination for convenience, will approximate 85 percent of the total amount then allotted to the contract for performance of the applicable item(s). The notification will state (1) the estimated date when that point will be reached and (2) an estimate of additional funding, if any, needed to continue performance of applicable line items up to the next scheduled date for allotment of funds identified in paragraph (i) of this clause, or to a mutually agreed upon substitute date. The notification will also advise the Contracting Officer of the estimated amount of additional funds that will be required for the timely performance of the item(s) funded pursuant to this clause, for a subsequent period as may be specified in the allotment schedule in paragraph (i) of this clause, or otherwise agreed to by the parties. If after such notification additional funds are not allotted by the date identified in the Contractor's notification, or by an agreed substitute date, the Contracting Officer will terminate any item(s) for which additional funds have not been allotted, pursuant to the clause of this contract entitled "Termination for Convenience of the Government."

(d) When additional funds are allotted for continued performance of the contract line item(s) identified in paragraph (a) of this clause, the parties will agree as to the period of contract performance which will be covered by the funds. The provisions of paragraph (b) through (d) of this clause will apply in like manner to the additional allotted funds and agreed substitute date, and the contract will be modified accordingly.

(e) If, solely by reason of failure of the Government to allot additional funds, by the dates indicated below, in amounts sufficient for timely performance of the contract line item(s) identified in paragraph (a) of this clause, the Contractor incurs additional costs or is delayed in the performance of the work under this contract and if additional funds are allotted, an equitable adjustment will be made in the price or prices (including appropriate target, billing, and ceiling prices where applicable) of the item(s), or in the time of delivery, or both. Failure to agree to any such equitable adjustment hereunder will be a dispute concerning a question of fact within the meaning of the clause entitled "Disputes."

(f) The Government may at any time prior to termination allot additional funds for the performance of the contract line item(s) identified in paragraph (a) of this clause.

(g) The termination provisions of this clause do not limit the rights of the Government under the clause entitled "Default." The provisions of this clause are limited to the work and allotment of funds for the contract line item(s) set forth in paragraph (a) of this clause. This clause no longer applies once the contract is fully funded except with regard to the rights or obligations of the parties concerning equitable adjustments negotiated under paragraphs (d) or (e) of this clause.

(h) Nothing in this clause affects the right of the Government to terminate this contract pursuant to the clause of this contract entitled "Termination for Convenience of the Government."

(i) The parties contemplate that the Government will allot funds to this contract in accordance with the following schedule:

On execution of contract.....$
(month) (day), 199x.....$
(month) (day), 199y.....$
(month) (day), 199z.....$

(End of clause)

Alternate I (Aug. 1993). If only one line item will be incrementally funded, substitute the following paragraph (a) for paragraph (a) of the basic clause.

(a) Contract line item _____is incrementally funded. The sum of $_____* is presently available for payment and allotted to this contract. An allotment schedule is contained in paragraph (i) of this clause.

*To be inserted after negotiation.

[FR Doc. 93–21266 Filed 8–31–93; 8:45 am]
BILLING CODE 3810–01–M

DEPARTMENT OF COMMERCE

National Oceanic and Atmospheric Administration

50 CFR Part 661

[Docket No. 930402–3134; I.D. 082493A]

Ocean Salmon Fisheries off the Coasts of Washington, Oregon, and California

AGENCY: National Marine Fisheries Service (NMFS), National Oceanic and Atmospheric Administration (NOAA), Commerce.

ACTION: Closure.

SUMMARY: NMFS announces that the recreational salmon fishery in the exclusive economic zone (EEZ) from the U.S.-Canada border to Cape Alava, Washington, was closed at midnight, August 22, 1993, to ensure that the coho salmon quota for this subarea is not exceeded. The Director, Northwest Region, NMFS (Regional Director), has determined that the recreational fishery quota of 19,700 coho salmon for the subarea has been reached. This action is necessary to conform to the preseason announcement of the 1993 management measures and is intended to ensure conservation of coho salmon.

DATES: Effective at 2400 hours local time, August 22, 1993. Comments will be accepted through September 15, 1993.

ADDRESSES: Comments may be mailed to Rolland A. Schmitten, Director, Northwest Region, National Marine Fisheries Service, NOAA, 7600 Sand Point Way N.E., BIN C15700-Bldg. 1, Seattle, WA 98115–0070. Information relevant to this notice has been compiled in aggregate form and is available for public review during business hours at the office of the NMFS Northwest Regional Director.

FOR FURTHER INFORMATION CONTACT: William L. Robinson at (206) 526–6140.

SUPPLEMENTARY INFORMATION: Regulations governing the ocean salmon fisheries at 50 CFR 661.21(a)(1) state that "When a quota for the commercial or the recreational fishery, or both, for any salmon species in any portion of the fishery management area is projected by the Regional Director to be reached on or by a certain date, the Secretary will, by notice issued under § 661.23, close the commercial or recreational fishery,

or both, for all salmon species in the portion of the fishery management area to which the quota applies as of the date the quota is projected to be reached."

In its amended emergency interim rule (58 FR 31664, June 4, 1993), NMFS announced that the 1993 recreational fishery for all salmon species in the subarea from the U.S.-Canada border to Cape Alava, Washington, would open July 12 and continue through the earliest of September 30 or the attainment of either a subarea quota of 19,700 coho salmon or an overall quota of 25,000 chinook salmon north of Cape Falcon, Oregon.

Based on the best available information on August 19, 1993, the recreational fishery catch in the subarea from the U.S.-Canada border to Cape Alava was projected to reach the 19,700 coho salmon quota by midnight, August 22, 1993. Therefore, the recreational fishery in this subarea was closed to recreational fishing for all salmon species effective 2400 hours local time, August 22, 1993.

The Regional Director consulted with representatives of the Pacific Fishery Management Council and the Washington Department of Fisheries regarding this closure. The State of Washington will manage the recreational fishery in state waters adjacent to this area of the EEZ in accordance with this Federal action. The recreational salmon fishery in Washington State Statistical Area 4B continues as regularly scheduled under State regulations. In accordance with the inseason notice procedures of 50 CFR 661.23, actual notice to fishermen of this action was given prior to 2400 hours local time, August 22, 1993, by telephone hotline number (206) 526-6667 or (800) 662-9825 and by U.S. Coast Guard Notice to Mariners broadcasts on Channel 16 VHF-FM and 2182 Khz. Because of the need for immediate action, the Secretary of Commerce has determined that good cause exists for this notice to be issued without affording a prior opportunity for public comment. This notice does not apply to treaty Indian fisheries or to other fisheries that may be operating in other areas.

Classification

This action is authorized by 50 CFR 661.21 and 661.23 and is in compliance with Executive Order 12291.

List of Subjects in 50 CFR Part 661

Fisheries, Fishing, Indians, Reporting and recordkeeping requirements.

Authority: 16 U.S.C. 1801 *et seq.*

Dated: August 27, 1993.

Richard H. Schaefer,

Director of Office of Fisheries, Conservation and Management, National Marine Fisheries Service.

[FR Doc. 93-21309 Filed 8-31-93; 8:45 am]

BILLING CODE 3510-22-M

---

50 CFR Part 663

[Docket No. 921253-2353; ID. 082593B]

Pacific Coast Groundfish Fishery

AGENCY: National Marine Fisheries Service (NMFS), National Oceanic and Atmospheric Administration, (NOAA), Commerce.

ACTION: Fishing restrictions; request for comments.

SUMMARY: NMFS announces the end of the large-scale Pacific whiting (whiting) fishery off Washington, Oregon, and California, and the reimposition of the 10,000-pound trip limit coastwide. This action is authorized under Amendment 4 to the Pacific Coast Groundfish Fishery Management Plan (FMP). It is intended to keep landings close to the harvest guideline while allowing small quantities of whiting to be landed by fresh fish and bait fisheries, and from bycatch in non-whiting fisheries.

EFFECTIVE DATES: Effective from 0001 hours (local time) September 4, 1993, until modified, superseded, or rescinded. Comments will be accepted through September 16, 1993.

ADDRESSES: Submit comments to Rolland A. Schmitten, Director, Northwest Region, National Marine Fisheries Service, 7600 Sand Point Way NE, BIN-C15700, Seattle, Washington 98115-0070; or Dr. Gary Matlock, Acting Director, Southwest Region, National Marine Fisheries Service, 501 West Ocean Blvd.; suite 4200, Long Beach, California 90802-4213.

FOR FURTHER INFORMATION CONTACT: William L. Robinson at 206-526-6140; or Rodney McInnis at 310-980-4040.

SUPPLEMENTARY INFORMATION: Amendment 4 to the FMP (56 FR 736, January 8, 1991) authorizes the designation of certain management measures as "routine." Implementation and further adjustment of those measures may occur after consideration at a Pacific Fishery Management Council (Council) meeting. Trip landing and frequency limits for whiting caught outside the regular season were designated routine at 50 CFR 663.23(c)(1)(i)(I) (58 FR 11984, March 2, 1993). A trip limit is defined at 50 CFR 663.2 as the total allowable amount of a groundfish species or species complex by weight, or by percentage of weight of fish on board, that may be taken and retained, possessed, or landed from a single fishing trip. The regular whiting season is the period during which the large-scale target fishery is conducted, and generally occurs between March/April and October/November.

At the September 1992 Council meeting, the Council recommended implementation of a 10,000-pound trip limit for whiting before and after the regular season in 1993. The 10,000-pound trip limit at the end of the regular season is necessary to keep landings close to the whiting harvest guideline while providing for small landings outside the regular season by the fresh fish and bait fisheries and from the bycatch of whiting in other fisheries.

The pre-season 10,000-pound trip limit became effective on February 25, 1993, concurrent with the routine designation. The regular season started on April 15, 1993. The whiting fishery was then closed to further at-sea processing on May 5, 1993, when its 100,000 metric-ton (mt) limit was projected to be reached (58 FR 27480). Shoreside processing continued to operate through the summer months. The best available data on August 20, 1993, indicate that approximately 131,500 mt of whiting had been harvested through August 10, 1993, with shoreside landings averaging 430 mt per day. At that rate, the 142,000-mt harvest guideline for whiting is projected to be reached on September 3, 1993. Therefore, NMFS is reimposing the 10,000-pound trip limit for whiting coastwide on September 4, 1993.

Note: The pre-season and post-season trip limits for whiting are not the same as the trip limits for whiting at 50 CFR 663.23(b)(3)(iii) which is intended to minimize bycatch of Pacific salmon under Amendment 7 to the FMP (58 FR 21261, April 20, 1993). The bycatch trip limit to protect salmon, which also is 10,000-pounds in 1993, only applies shoreward of the 100-fathom contour in the Eureka subarea (from 43°00'00" N. latitude to 43°30'00" N. latitude) and remains in effect year-round.

Secretarial Action

For the reasons given above, the Secretary of Commerce (Secretary) concurs with the Council's recommendation and announces the following action:

(1) Effective 0001 hours (local time) September 4, 1993, the trip limit for Pacific whiting is 10,000 pounds per vessel coastwide.

(2) All Pacific whiting caught and possessed zero and 200 nautical miles offshore, or landed in Washington, Oregon, or California are presumed to have been taken and retained from the

fishery management area (three-200 nautical miles offshore Washington, Oregon, and California) unless otherwise demonstrated by the person in possession of those fish.

Classification

The determination to reimpose the 10,000-pound trip limit coastwide for the whiting fishery is based on the most recent data available. The aggregate data upon which the determination is based are available for public inspection at the Office of the Director, Northwest Region (see **ADDRESSES**) during business hours until September 15, 1993.

This action is taken under the authority of 50 CFR 663.23(b)(3) and (c)(1), and section III.B.2. of the appendix to 50 CFR part 663.

This action is in compliance with Executive Order 12291.

List of Subjects in 50 CFR Part 663

Administrative practice and procedure, Fisheries, Fishing, and Recordkeeping and reporting requirements.

Authority: 16 U.S.C. 1801 *et seq.*

Dated: August 26, 1993.

David S. Crestin,

Acting Director, Office of Fisheries Conservation and Management, National Marine Fisheries Service.

[FR Doc. 93-21264 Filed 8-31-93; 8:45 am]

BILLING CODE 3510-22-M

50 CFR Part 672

[Docket No. 921107-3068; I.D. 082693A]

Groundfish of the Gulf of Alaska

AGENCY: National Marine Fisheries Service (NMFS), National Oceanic and Atmospheric Administration (NOAA), Commerce.

ACTION: Closure.

SUMMARY: NMFS is prohibiting directed fishing for groundfish, other than demersal shelf rockfish (DSR), by operators of vessels using hook-and-line gear in the Gulf of Alaska (GOA). This action is necessary because the total 1993 prohibited species catch (PSC) allowance of Pacific halibut to hook-and-line gear for fisheries other than DSR in the GOA has been caught.

EFFECTIVE DATE: 12 noon, Alaska local time (A.l.t.), August 31, 1993, through 12 midnight, A.l.t., December 31, 1993.

FOR FURTHER INFORMATION CONTACT: Andrew N. Smoker, Resource Management Specialist, Fisheries Management Division, Alaska Region, NMFS, 907-586-7228.

SUPPLEMENTARY INFORMATION: The groundfish fishery in the GOA exclusive economic zone is managed by the Secretary of Commerce according to the Fishery Management Plan for Groundfish of the GOA (FMP) prepared by the North Pacific Fishery Management Council under authority of the Magnuson Fishery Conservation and Management Act. Fishing by U.S. vessels is governed by regulations implementing the FMP at 50 CFR parts 620 and 672.

The 1993 final specifications for the GOA (58 FR 16787, March 31, 1993) established the 1993 Pacific halibut PSC allowance for hook-and-line gear for groundfish fisheries, other than DSR, at 740 metric tons.

The Director of the Alaska Region, NMFS, has determined, in accordance with § 672.20(f)(1)(ii), that operators of vessels engaged in directed fishing for groundfish, other than DSR, with hook-and-line gear in the GOA have caught the 1993 allowance of prohibited species catch of Pacific halibut. Therefore, NMFS is prohibiting directed fishing for groundfish, other than DSR, by operators of vessels using hook-and-line gear in the GOA from 12 noon, A.l.t., August 31, 1993, through 12 noon, A.l.t., December 31, 1993.

Directed fishing standards for applicable gear types may be found in the regulations at § 672.20(g).

Classification

This action is taken under § 672.20 and complies with E.O. 12291.

List of Subjects in 50 CFR Part 672

Fisheries, Reporting and recordkeeping requirements.

Authority: 16 U.S.C 1801 et seq.

Dated: August 26, 1993.

David S. Crestin,

Acting Director, Office of Fisheries Conservation and Management, National Marine Fisheries Service.

[FR Doc. 93-21265 Filed 8-31-93; 8:45 am]

BILLING CODE 3510-22-M

Proposed Rules

Federal Register
Vol. 58, No. 168
Wednesday, September 1, 1993

This section of the FEDERAL REGISTER contains notices to the public of the proposed issuance of rules and regulations. The purpose of these notices is to give interested persons an opportunity to participate in the rule making prior to the adoption of the final rules.

OFFICE OF GOVERNMENT ETHICS

5 CFR Part 2634

RIN 3209–AAOO

Executive Branch Financial Disclosure, Qualified Trusts, and Certificates of Divestiture

AGENCY: Office of Government Ethics (OGE).

ACTION: Proposed rule.

SUMMARY: The Office of Government Ethics proposes to amend subpart I of 5 CFR part 2634, an interim rule on executive branch financial disclosure which was published on April 7, 1992. The proposed amendment exempts certain assets and income from disclosure on confidential financial disclosure reports. Specifically, it would eliminate the interim rule's requirement that confidential filers disclose the existence of and income from cash accounts in depository institutions, money market mutual funds and accounts, and U.S. Government obligations and securities.

DATES: Public comments on this proposed rule are welcome and must be received on or before October 1, 1993.

ADDRESSES: Comments on this proposed rule should be sent to the Office of Government Ethics, suite 500, 1201 New York Avenue, NW., Washington, DC 20005–3917, Attention: G. Sid Smith. Any comments on the reporting requirements in this proposed rule should also be filed with the Office of Management and Budget (OMB) as indicated in the preamble below in the "Paperwork Reduction Act" discussion.

FOR FURTHER INFORMATION CONTACT: G. Sid Smith, Office of Government Ethics, telephone (202) 523–5757, FAX (202) 523–6325.

SUPPLEMENTARY INFORMATION: This proposed rule amends an interim rule which revised both the public and confidential financial disclosure systems for executive branch employees, pursuant to title I of the Ethics in Government Act of 1978 (Pub. L. 95–521, as amended by the Ethics Reform Act of 1989, Pub. L. 101–194), and pursuant to Executive Order 12674 of April 12, 1989 (as modified). That interim rule was published on April 7, 1992 (57 FR 11800–11830) and corrected on May 22 and December 31, 1992 at 57 FR 21854–21855 and 57 FR 62605, respectively.

Executive branch employees who serve in positions which require them to file confidential financial disclosure reports under the interim rule must disclose the existence of and income from cash accounts (including both demand and time deposits) in depository institutions, such as banks, savings and loan associations, credit unions, and similar depository financial institutions; money market mutual funds and accounts; U.S. Government obligations, including Treasury bonds, bills, notes, and savings bonds; and Government securities issued by U.S. Government agencies. However, for most confidential filers, the disclosure of this information has not been considered by agencies to be critical in assessing the possibility of conflicts of interest. Furthermore, some concerns have been expressed about privacy, and disclosure of such information creates extra work for both filers and agency reviewing officials and could detract from the effectiveness and limited purpose of the confidential disclosure program. These concerns have been communicated to OGE by numerous confidential filers, as well as by several agency reviewing officials.

Accordingly, this proposed amendment to § 2634.907 of subpart I of 5 CFR would exempt all confidential filers from the requirement to disclose these specific assets and the income therefrom. If an agency finds such disclosures to be necessary because of its mission or other special circumstances, it may seek approval from OGE, pursuant to § 2634.901(b) of subpart I of 5 CFR, for a supplemental reporting requirement to include disclosure of any or all of these elements.

Executive Order 12291

As Director of the Office of Government Ethics, I have determined that this amendment does not constitute a major rule as defined under section 1(b) of Executive Order 12291.

Regulatory Flexibility Act

As Director of the Office of Government Ethics, I certify under the Regulatory Flexibility Act (5 U.S.C. chapter 6) that this amendment to the interim rule will not have a significant economic impact on a substantial number of small entities because it will affect only Federal executive branch agencies and employees.

Paperwork Reduction Act

The proposed amendment would affect (lessen) part of the information collection requirement as set forth in 5 CFR 2634.907 (a)(1) and (a)(2), concerning reporting of certain specified interests in property and income, as to filers of the Executive Branch Personnel Confidential Financial Disclosure Report (SF 450, OMB number 3209–0006). Thus, it is subject to the approval of the Office of Management and Budget under the Paperwork Reduction Act (5 U.S.C. chapter 35). Any comments on the reporting requirements should therefore be directed to the Office of Management and Budget, room 3002, New Executive Office Building, Washington, DC 20503, Attention: Mr. Lackey (with a copy to OGE, see the ADDRESSES block above).

List of Subjects in 5 CFR Part 2634

Administrative practice and procedure, Certificates of divestiture, Conflict of interests, Financial disclosure, Government employees, Penalties, Privacy, Reporting and recordkeeping requirements, Trusts and trustees.

Approved: June 8, 1993.

Stephen D. Potts,

Director, Office of Government Ethics.

Accordingly, for the reasons set forth in the preamble, the Office of Government Ethics proposes to amend part 2634 of subchapter B of chapter XVI of title 5 of the Code of Federal Regulations as follows:

PART 2634—[AMENDED]

1. The authority citation for part 2634 continues to read as follows:

Authority: 5 U.S.C. App. (Ethics in Government Act of 1978); 26 U.S.C. 1043; E.O. 12674, 54 FR 15159, 3 CFR, 1989 Comp., p. 215, as modified by E.O. 12731, 55 FR 42547, 3 CFR, 1990 Comp., p. 306.

Subpart I—Confidential Financial Disclosure Reports

2. Section 2634.907 is amended by revising paragraphs (a)(1) and (a)(2) to read as follows:

§ 2634.907 Report contents.

(a) * * *

(1) *Interests in property.* All the interests in property specified by § 2634.301, except:

(i) Accounts (including both demand and time deposits) in depository institutions, including banks, savings and loan associations, credit unions, and similar depository financial institutions;

(ii) Money market mutual funds and accounts;

(iii) U.S. Government obligations, including Treasury bonds, bills, notes, and savings bonds; and

(iv) Government securities issued by U.S. Government agencies;

(2) *Income.* All the income items specified by § 2634.302, except from:

(i) Accounts in depository institutions, including banks, savings and loan associations, credit unions, and similar depository financial institutions;

(ii) Money market mutual funds and accounts;

(iii) U.S. Government obligations, including Treasury bonds, bills, notes, and savings bonds; and

(iv) Government securities issued by U.S. Government agencies;

* * * * *

[FR Doc. 93–21298 Filed 8–31–93; 8:45 am]

BILLING CODE 6345–01–U

DEPARTMENT OF AGRICULTURE

Rural Electrification Administration

7 CFR Part 1755

RIN 0572-AA57

Specification for Filled Fiber Optic Cables

AGENCY: Rural Electrification Administration, USDA.

ACTION: Proposed rule.

SUMMARY: The Rural Electrification Administration (REA) proposes to amend its regulations on Telecommunications Standards and Specifications for Materials, Equipment and Construction by rescinding REA Bulletin 345–90, REA Specification for Totally Filled Fiber Optic Cable, PE–90, and codifying the revised specification. The revised specification: Allows the use of dispersion-shifted single mode fibers; allows use of 62.5/125 micrometer multimode fibers; includes a section on self-supporting aerial fiber optic cable; and establishes end product requirements associated with the options stated above. This revised specification updates the end product performance requirements of filled fiber optic cables brought about through technological advancements made during the last seven years.

DATES: Comments must be received by REA or postmarked no later than October 1, 1993.

ADDRESSES: Comments should be mailed to Director, Telecommunications Standards Division, Rural Electrification Administration, room 2835, South Building, U.S. Department of Agriculture, Washington, DC 20250–1500. REA requests an original and three copies of all comments (7 CFR part 1700). Comments received may be available for public inspection between 8:00 a.m. and 4:00 p.m. (7 CFR 1.27(b)).

FOR FURTHER INFORMATION CONTACT: Garnett G. Adams, Chief, Outside Plant Branch, Telecommunications Standards Division, Rural Electrification Administration, room 2844, South Building, U.S. Department of Agriculture, Washington, DC 20250–1500, telephone number (202) 720–0667.

SUPPLEMENTARY INFORMATION:

Executive Order 12291

This proposed rule has been issued in conformance with Executive Order 12291 and Departmental Regulation 1512–1. This action has been classified as "nonmajor" because it does not meet the criteria for a major regulation as established by the Order.

Executive Order 12778

This proposed rule has been reviewed under Executive Order 12778, Civil Justice Reform. If adopted, this proposed rule will not:

(1) Preempt any State or local laws, regulations, or policies;

(2) Have any retroactive effect; and

(3) Require administrative proceedings before parties may file suit challenging the provisions of this rule.

Regulatory Flexibility Act Certification

The Administrator of REA has determined that this proposed rule will not have a significant impact on a substantial number of small entities, as defined by the Regulatory Flexibility Act (5 U.S.C. *et seq.*). This proposed rule involves standards and specifications, which may increase the direct short-term costs to the REA borrower. However, the long-term direct economic costs are reduced through greater durability and lower maintenance cost over time.

Information Collection and Recordkeeping Requirements

In compliance with the Office of Management and Budget (OMB) regulations (5 CFR part 1320) which implements the Paperwork Reduction Act of 1980 (Pub. L. 96–511) and section 3504 of that Act, information collection and recordkeeping requirements contained in this proposed rule have been approved by OMB under control number 0572–0077 which expires on January 31, 1994. Comments concerning these requirements should be directed to the Office of Information and Regulatory Affairs of OMB, Attention: Desk Officer for USDA, room 3201, New Executive Office Building (NEOB), Washington, DC 20503.

National Environmental Policy Act Certification

The Administrator of REA has determined that this proposed rule will not significantly affect the quality of the human environment as defined by the National Environmental Policy Act of 1969 (42 U.S.C. 4321 *et seq.*) Therefore, this action does not require an environmental impact statement or assessment.

Catalog of Federal Domestic Assistance

The program described by this proposed rule is listed in the Catalog of Federal Domestic Assistance programs under No. 10.851, Rural Telephone Loans and Loan Guarantees, and No. 10.852, Rural Telephone Bank Loans. This catalog is available on a subscription basis from the Superintendent of Documents, United States Government Printing Office, Washington, DC 20402.

Executive Order 12372

This proposed rule is excluded from the scope of Executive Order 12372, Intergovernmental Consultation, which may require consultation with State and local officials. A Notice of Final rule titled Department Programs and Activities Excluded from Executive Order 12372 (50 FR 47034) exempts REA and RTB loans and loan guarantees, and RTB loans, to governmental and nongovernmental entities from coverage under this Order.

Background

REA issues publications titled "Bulletin" which serve to guide borrowers regarding already codified policy, procedures, and requirements needed to manage loans, loan guarantee programs, and the security instruments

which provide for and secure REA financing. REA issues standards and specifications for the construction of telephone facilities financed with REA loan funds. REA proposes to rescind Bulletin 345–90, REA Specification for Totally Filled Fiber Optic Cable, PE–90, and to codify this specification at 7 CFR 1755.900, REA Specification for Filled Fiber Optic Cables.

Filled fiber optic cable is used in outside plant by REA telephone borrowers as a physical transport medium for voice and data. The current REA Specification PE–90 limits the type of single mode fiber to dispersion-unshifted. The limitation was established because REA borrowers' lightwave systems operate at the 1310 nanometer wavelength for which the dispersion-unshifted fiber is optimally designed. The dispersion-unshifted single mode fiber can also be used in lightwave systems operating at the 1550 nanometer wavelength window but with a degradation in signal transmission. To provide REA borrowers with a quality fiber optic cable to be used in lightwave systems operating at 1550 nanometers without signal degradation, the revised specification will include single mode dispersion-shifted fiber as an option to single mode dispersion-unshifted fiber.

The current REA Specification PE–90 limits multimode fiber to 50/125 micrometers because at the time the specification was written, it was the only diameter multimode fiber in existence. Since that time the fiber optic industry has developed several multimode fiber designs of which the 62.5/125 micrometer design has become the de facto standard. Now that 62.5/125 micrometer multimode fiber is an accepted industry standard, the revised specification will include the 62.5/125 multimode fiber as an option to the 50/125 multimode fiber.

The current REA Specification PE–90 does not include a self-supporting aerial fiber optic cable because when the specification was written, no such cable design existed. Since issuance of the current specification, fiber optic cable manufacturers have developed such cable designs. These designs have been installed in operating telephone systems and are providing satisfactory field performance. The installation cost of self-supporting aerial fiber optic cable is less than the installation cost of lashed aerial fiber optic cable. To provide REA borrowers with a less costly aerial fiber optic cable installation, the revised specification will include a section on self-supporting aerial fiber optic cable.

The current specification includes only end product requirements associated with filled fiber optic cable utilizing only dispersion-unshifted single mode fibers and 50/125 micrometers multimode fibers and lashed aerial fiber optic cables. Since the revised specification will allow dispersion-shifted single mode fibers, 62.5/125 micrometers multimode fibers, and self-supporting aerial fiber optic cables, end product requirements have been included to assure quality products for these applications.

This action establishes REA requirements for a wider range of filled fiber optic cables without affecting current designs or manufacturing techniques. This widened selection of cables will afford REA telephone borrowers the opportunity to increase subscriber services in an economical and efficient manner through enhanced cable designs brought about by technological advancements made during the past six years.

List of Subjects in 7 CFR Part 1755

Loan Programs—communications, Reporting and recordkeeping requirements, Rural areas, Telephone.

For the reasons set out in the preamble, REA proposes to amend chapter XVII of title 7 of the Code of Federal Regulations as follows:

PART 1755—TELECOMMUNICATIONS STANDARDS AND SPECIFICATIONS FOR MATERIALS, EQUIPMENT AND CONSTRUCTION

1. The authority citation for part 1755 continues to read as follows:

Authority: 7 U.S.C. 901 *et seq.*, 1921 *et seq.*

§ 1755.97 [Amended]

2. Section 1755.97 is amended by removing the entry REA Bulletin 345–90 from the table.

3. Section 1755.900 is added to read as follows:

§ 1755.900 REA specification for filled fiber optic cables.

(a) *Scope.* (1) This section covers the requirement for filled fiber optic cables intended for aerial installation either by attachment to a support strand or by an integrated self-supporting arrangement, for underground application by placement in a duct, or for buried installations either by trenching or by direct plowing.

(i) The optical waveguides are glass fibers encased in protective buffer coatings.

(ii) Fillers and strength members complete the cable core.

(iii) The buffer coatings containing the fibers and the interstices between the buffer coatings are filled with a suitable material to exclude water.

(iv) The cable structure is completed by an extruded overall plastic jacket.

(v) Buried installation requires an armor under the outer jacket.

(vi) In the case of self-supporting cable, the outer jacket may be extruded over the support messenger and cable core.

(2) The cable is fully color coded so that each fiber is distinguishable from every other fiber. A basic color scheme of twenty-four colors allows individual fiber identification. Colored tubes, binders, threads, stripings, or markings provide fiber group identification.

(3) Cable manufactured to this section must demonstrate compliance with the qualification testing requirements to ensure satisfactory end-use performance characteristics for the intended applications.

(4) Optical cable designs not specifically addressed by this section may be allowed if accepted by REA. Justification for acceptance of a modified design must be provided to substantiate product utility and long term stability and endurance.

(5) All cables sold to REA borrowers for projects involving REA loan funds under this section must be accepted by REA Technical Standards Committee "A" (Telephone). For cables manufactured to the specification of this section, all design changes to an accepted design must be submitted for acceptance. REA will be the sole authority on what constitutes a design change.

(6) The American National Standard Institute/Electronic Industries Association (ANSI/EIA) 359-A-84, EIA Standard Colors for Color Identification and Coding, referenced in this section is incorporated by reference by REA. This incorporation by reference was approved by the Director of the Federal Register in accordance with 5 U.S.C. 552(a) and 1 CFR part 51. Copies of ANSI/EIA 359-A-84 are available for inspection during normal business hours at the Office of the Federal Register, 800 North Capitol Street, NW., suite 700, Washington, DC. Copies are available from EIA, 2001 Pennsylvania Avenue, NW., suite 900, Washington, DC 20006, telephone number (202) 457–4966.

[**Note:** The incorporation by reference and availability of inspection copies are pending approval by the Office of the Federal Register.]

(7) American Society for Testing and Materials Specifications (ASTM) A 640–91, Specification for Zinc-Coated Steel Strand for Messenger Support of Figure 8 Cable; ASTM B 736–92a, Specification for Aluminum, Aluminum Alloy, and Aluminum-Clad Steel Cable Shielding

Stock; ASTM D 1238–90b, Test Method for Flow Rates of Thermoplastics by Extrusion Plastometer; ASTM D 1248–84(1989), Specification for Polyethylene Plastic Molding and Extrusion Materials, ASTM D 1535–89, Method for Specifying Color by the Munsell System; ASTM D 3349–86, Test Method for Absorption Coefficient of Carbon Black Pigmented Ethylene Plastic Film; ASTM D 4565–90a, Methods of Testing Physical and Environmental Performance Properties of Insulations and Jackets for Telecommunications Wire and Cable; ASTM D 4566–90, Methods of Testing Electrical Performance Properties of Insulation and Jacket for Telecommunications Wire and Cable; ASTM D 4568–86, Evaluating Compatibility Between Cable Filling and Flooding Compounds and Polyolefin Cable Materials; and ASTM E 29–90, Recommended Practice for Indicating Which Places of Figures Are to Be Considered Significant in Specified Limiting Values, referenced in this section are incorporated by reference by REA. These incorporations by references were approved by the Director of the Federal Register in accordance with 5 U.S.C. 552(a) and 1 CFR part 51. Copies of ASTM standards are available for inspection during normal business hours at the Office of the Federal Register, 800 North Capitol Street, NW., suite 700, Washington, DC. Copies are available from ASTM, 1916 Race Street, Philadelphia, Pennsylvania 19103–1187, telephone number (215) 299–5585.

[Note: The incorporation by reference and availability of inspection copies are pending approval by the Office of the Federal Register.]

(8) Electronic Industries Association Standards (EIA) RS-455–20, Measurement of Change in Optical Transmittance; EIA 455–30A, Frequency Domain Measurement of Multimode Optical Fiber Information Transmission Capacity; EIA RS-455–37, Fiber Optic Cable Bend Test Low and High Temperature; EIA 455–41, Compressive Loading Resistance of Fiber Optic Cables; EIA 455–45A, Microscopic Method for Measuring Fiber Geometry of Optical Waveguide Fibers; EIA RS-455–51, Pulse Distortion Measurement of Multimode Glass Optical Fiber Information Transmission Capacity; EIA 455–56A, Test Method for Evaluating Fungus Resistance of Optical Waveguide Fibers and Cables; EIA 455–81A, Compound Flow (Drip) Test for Filled Fiber Optic Cable; EIA 455–82A, Fluid Penetration Test for Fluid-Blocked Fiber Optic Cable; EIA 455–85, Fiber Optic Cable Twist Test; EIA 455–104, Fiber Optic Cable Cyclic Flexing Test; EIA 455–164, Single Mode Fiber, Measurement of Mode Field Diameter by Far-Field Scanning; EIA 455–165, Single Mode Fiber, Measurement of Mode Field Diameter by Near Field Scanning; EIA 455–167, Mode Field Diameter Measurement—Variable Aperture Method in the Far Field; EIA 455–168, Chromatic Dispersion Measurement of Multimode Graded-Index and Single Mode Optical Fibers by Spectral Group Delay Measurement in the Time Domain; EIA 455–169, Chromatic Dispersion Measurement of Optical Fibers by the Phase-Shift Method; EIA 455–174, Mode Field Diameter of Single Mode Optical Fiber by Knife-Edge Scanning in the Far Field; and EIA 455–176, Measurement Method for Optical Fiber Geometry by Automated Grey-Scale Analysis, referenced in this section are incorporated by reference by REA. These incorporations by references were approved by the Director of the Federal Register in accordance with 5 U.S.C. 552(a) and 1 CFR part 51. Copies of EIA standards are available for inspection during normal business hours at the Office of the Federal Register, 800 North Capitol Street, NW., suite 700, Washington, DC. Copies are available from EIA, 2001 Pennsylvania Avenue, NW., suite 900, Washington, DC 20006, telephone number (202) 457–4966.

[Note: The incorporation by reference and availability of inspection copies are pending approval by the Office of the Federal Register.]

(9) Electronic Industries Association/Telecommunications Industries Association Standards (EIA/TIA) 455–25A, Repeated Impact Testing of Fiber Optic Cables and Cable Assemblies; EIA/TIA 455–31B, Fiber Tensile Proof Test Method; EIA/TIA 455–46A, Spectral Attenuation Measurement for Long-Length, Graded-Index Optical Fibers; EIA/TIA 455–48B, Measurement of Optical Fiber Cladding Diameter Using Laser-Based Instruments; EIA/TIA 455–53A, Attenuation by Substitution Measurement for Multimode Graded-Index Optical Fibers or Fiber Assemblies Used in Long Length Communications Systems; EIA/TIA 455–55B, End-View Methods for Measuring Coating and Buffer Geometry of Optical Fibers; EIA/TIA 455–58A, Core Diameter Measurement of Graded-Index Optical Fibers; EIA/TIA 455–59, Measurement of Fiber Point Defects Using an OTDR; EIA/TIA 455–61, Measurement of Fiber or Cable Attenuation Using an OTDR; EIA/TIA 455–78A, Spectral-Attenuation Cutback Measurement for Single Mode Optical Fibers; EIA/TIA 455–170, Cable Cutoff Wavelength of Single Mode Fiber by Transmitted Power; EIA/TIA 455–173, Coating Geometry Measurement for Optical Fiber Side-View Method; EIA/TIA 455–175, Chromatic Dispersion Measurement of Optical Fibers by the Differential Phase Shift Method; EIA/TIA 455–177, Numerical Aperture Measurement of Graded-Index Optical Fibers; and EIA/TIA 455–178, Measurement of Strip Force Required for Mechanically Removing Coatings from Optical Fibers, referenced in this section are incorporated by reference by REA. These incorporations by references were approved by the Director of the Federal Register in accordance with 5 U.S.C. 552(a) and 1 CFR part 51. Copies of EIA/TIA standards are available for inspection during normal business hours at the Office of the Federal Register, 800 North Capitol Street, NW., suite 700, Washington, DC. Copies are available from EIA, 2001 Pennsylvania NW., suite 900, Washington, DC 20006, telephone number (202) 457–4966.

[Note: The incorporation by reference and availability of inspection copies are pending approval by the Office of the Federal Register.]

(10) REA intends that the optical fibers contained in the cables manufactured in accordance with this section have characteristics that will allow signals, having a range of wavelengths, to be carried simultaneously.

(b) *Optical fibers.* (1) The solid glass optical fibers must consist of a cylindrical core and cladding covered by a ultraviolet acrylate coating.

(2) The optical fiber types must be one of the following:

(i) Dispersion-unshifted single mode fiber EIA Class IVa;

(ii) Dispersion-shifted single mode fiber EIA Class IVb;

(iii) 50/125 micrometer multimode fiber EIA Class Ia; or

(iv) 62.5/125 micrometer multimode fiber EIA Class Ia.

(3) The dispersion-unshifted single mode fiber core must have either a matched or depressed clad step refractive index profile with a mode-field diameter of 9.0 ± 1.0 micrometers when measured at 1300 nanometers and 10.5 +1.0 micrometers/ −1.5 micrometers when measured at 1550 nanometers in accordance with any one of the following test methods:

(i) EIA-455–164;

(ii) EIA-455–165;

(iii) EIA-455–167; or

(iv) EIA-455–174.

(4) The dispersion-shifted single mode fiber core must have either a

segmented core design or depressed clad step refractive index profile with a mode-field diameter of 7.5 ± 1.3 micrometers when measured at 1550 nanometers in accordance with any one of the test procedures specified in paragraph (b)(3) of this section.

(5) The core clad off-set of the dispersion-unshifted and dispersion-shifted single mode fibers must not be greater than 1.0 micrometer when measured in accordance with either EIA-455–45A or EIA-455–176.

(6) The multimode fiber cores must have graded (parabolic) refractive index profiles with core diameters of 50.0 ± 3.0 micrometers or 62.5 ± 3.0 micrometers when measured in accordance with either EIA/TIA-455–58A, or EIA-455–176.

(7) The core noncircularity of multimode fibers must not exceed 6 percent when measured in accordance with either EIA-455–45A or EIA-455–176.

(8) The outside diameter of the glass fiber for both single mode and multimode fibers must be 125 ± 2.0 micrometers when measured in accordance with any one of the following test methods:

(i) EIA-455–45A;

(ii) EIA-455–176; or

(iii) EIA/TIA-455–48B, Methods A or B.

(9) The outside diameter of the glass fiber must be nominally concentric with the fiber core as is consistent with the best commercial practice.

(10) The individual fibers must be proof tested at a minimum tensile stress of 0.35 gigapascal for approximately one second when measured in accordance with EIA/TIA-455–31B.

(11) Factory splices of fibers are allowed provided that prior acceptance from REA is obtained for the splice technique, that all splices are documented and reported to the customer, and that the spliced fiber meets all requirements of this section.

(12) The optical fiber must be coated with a suitable material to preserve the intrinsic strength of the glass having an outside diameter of 250 ± 15 micrometers when measured in accordance with either EIA/TIA-455–55B or EIA/TIA 455–173.

(13) The maximum force required to remove 25 millimeters of protective fiber coating must not exceed 13 newtons when measured in accordance with EIA/TIA-455–178.

(14) All optical fibers in any single length of cable must be of the same type.

(c) *Buffer/coating.* (1) The optical fibers contained in a tube buffer (loose tube), an inner jacket (unit core), a channel or otherwise loosely packaged must have a clearance between the fibers and the inside of the container sufficient to allow for thermal expansions without constraining the fibers. The protective container must be manufactured from a material having a coefficient of friction sufficiently low to allow the fibers free movement.

(2) Optical fibers covered in near contact with an extrusion (tight tube) must have an intermediate soft buffer to allow for thermal expansions and minor pressures.

(3) All protective coverings in any single length of cable must be continuous and be of the same material except at splice locations.

(4) The protective coverings must be free from holes, splits, blisters, and other imperfections and must be as smooth and concentric as is consistent with the best commercial practice.

(5) Repairs to the fiber coatings are not allowed except at splice locations.

(6) Both loose tube and tight tube coverings of each color and other fiber package types removed from the finished cable must meet the following shrinkback and cold bend performance requirements. The fibers may be left in the tubes.

(i) *Shrinkback.* Testing must be conducted in accordance with ASTM D 4565–90a, paragraph 14.1, using a talc bed at a temperature of 95°C. Shrinkback must not exceed 5 percent of the original 150 millimeter length of the specimen. The total shrinkage of the specimen must be measured.

(ii) *Cold bend.* Testing must be conducted on at least one tube from each color in the cable. Stabilize the specimen to −20 ± 1°C for a minimum of four hours. While holding the specimen and mandrel at the test temperature, wrap the tube in a tight helix ten times around a mandrel with a diameter not greater than five times the tube diameter. The tube must show no evidence of cracking when observed with normal or corrected-to-normal vision.

Note: Channel cores and similar slotted single component core designs need not be tested for cold bend.

(d) *Fiber and buffer tube identification.* (1) The colors designated for identification of loose buffer tubes, tight tube buffer fibers and individual fibers in multifiber tubes, slots or bundles are shown in the following table:

Buffer Tube and Fiber No.	Color
1	Blue
2	Orange
3	Green
4	Brown
5	Slate
6	White
7	Red
8	Black
9	Yellow
10	Violet
11	Rose
12	Aqua
13	Blue/Black Tracer
14	Orange/Black Tracer
15	Green/Black Tracer
16	Brown/Black Tracer
17	Slate/Black Tracer
18	White/Black Tracer
19	Red/Black Tracer
20	Black/Yellow Tracer
21	Yellow/Black Tracer
22	Violet/Black Tracer
23	Rose/Black Tracer
24	Aqua/Black Tracer

(2) *Standards of color.* Except for the aqua and rose colors, the colors of fibers and tubes supplied in accordance with this section are specified in terms of the Munsell Color System (ASTM D 1535–89) and must comply with the "Table of Wire and Cable Limit Chips" as defined in ANSI/EIA-359-A-1984. (A visual color standard meeting these requirements and entitled "Munsell Color Charts for Color Coding," may be obtained from the Munsell Color Company, Inc., 2441 North Calvert Street, Baltimore, Maryland, 21218. Any of the several editions of the color standard published since 1942 may be used.)

(i) The aqua and rose color limits using the Munsell Color System must be as follows:

MUNSELL NOTATION

Symbol	Aqua Color	Rose Color
Centroid	10B 8/6	10RP 8/6
H+	2.5PB 8/6	2.5R 8/6
H−	—	7.5RP 8/6
V−	10B 7/6	10RP 7/6
Other	10B 8/4	10RP 8/4

(ii) Other coloring schemes used for providing identification of buffer tubes and optical fibers which deviate from the requirements of paragraph (d)(1) of this section will not be accepted by REA.

(e) *Strength members.* (1) Strength members must be an integral part of the cable construction, but are not considered part of the support messenger for self-supporting optical cable.

(2) The combined strength of all the strength members must be sufficient to

support the stress of installation and to protect the cable in service.

(3) Strength members may be incorporated into the core as a central support member or filler, as fillers between the fiber packages, as an annular serving over the core, as an annular serving over the intermediate jacket, embedded in the outer jacket or as a combination of any of these methods.

(4) The central support member or filler must contain no more than one splice per kilometer of cable. Individual fillers placed between the fiber packages and placed as annular servings over the core must contain no more than one splice per kilometer of cable. Cable sections having central member or filler splices must meet the same physical requirements as unspliced cable sections.

(5) Strength member materials and splicing techniques must be accepted by REA prior to their use.

(6) In each length of completed cable having a metallic central member, the dielectric strength between the armor and the metallic center member must withstand at least 15 kilovolts direct current for 3 seconds.

(f) *Forming the cable core.* (1) Protected fibers must be assembled with the optional central support member, fillers and strength members in such a way as to form a cylindrical group.

(2) The standard cylindrical group or core designs shall consist of 4, 6, 8, 10, 12, 16, 18, 20, or 24 fibers. Cylindrical groups or core designs larger than the sizes shown above must meet all the requirements of this section.

(3) When threads or tapes are used as core binders, they must be colored white and must be a nonhygroscopic and nonwicking dielectric material.

(4) When threads or tapes are used as unit binders to define optical fiber units in loose tube, tight tube, slotted, or bundled core designs, they must be colored in accordance with the table listed below and must be a nonhygroscopic and nonwicking dielectric material. The colors of the binders must be in accordance with paragraphs (d)(2) introductory text and (d)(2)(i) of this section.

Unit No.	Binder Color
1	Blue
2	Orange
3	Green
4	Brown
5	Slate
6	White
7	Red
8	Black
9	Yellow
10	Violet
11	Rose
12	Aqua
13	Blue-Black
14	Orange-Black
15	Green-Black
16	Brown-Black
17	Slate-Black
18	White-Black
19	Red-Black
20	Black-Black-Yellow
21	Yellow-Yellow-Black
22	Violet-Black
23	Rose-Black
24	Aqua-Black

(g) *Filling compound.* (1) To prevent the ingress of water into the core, a filling compound must be applied into the interior of the loose fiber tubes, into the interstices of the core, to the core wrap, over the core wrap and between the core wrap and inner jacket when required.

(2) The materials must be homogeneous and uniformly mixed; free from dirt, metallic particles and other foreign matter; easily removed; nontoxic and present no dermal hazards.

(3) The individual cable manufacturer must satisfy REA that the filling compound selected for use is suitable for its intended application. The filling compound must be compatible with the cable components when tested in accordance with ASTM D 4568–86 at a temperature of 80°C.

(h) *Core wrap.* (1) A layer of nonhygroscopic and nonwicking dielectric material may be applied over the core.

(2) The core wrap can be used to provide a heat barrier to prevent deformation or adhesion between the fiber tubes or can be used to contain the core.

(3) Sufficient filling compound must be applied to the core wrap so that voids or air spaces existing between the core and the inner side of the core wrap are minimized.

(i) *Inner jacket.* (1) Inner jackets may be applied directly over the core or over the strength members.

(i) For armored cable an inner jacket is optional but recommended. The inner jacket may absorb stresses in the cable core that may be introduced by armor application or by armored cable installation.

(ii) For unarmored cable an inner jacket is optional.

(2) The inner jacket material and test requirements must be as for the outer jacket material per paragraphs (m)(3) introductory text through (m)(3)(v) of this section, except that either black or natural polyethylene may be used. In the case of natural polyethylene, the requirements for absorption coefficient and the inclusion of furnace black are waived.

(3) The jacket material when conditioned according to the requirements of EIA-455–56A must exhibit no decrease in tensile strength or elongation from the original values of unconditioned material.

(j) *Flooding compound.* (1) Sufficient flooding compound must be applied between the inner jacket and armor and between the armor and outer jacket so that voids and air spaces in these areas are minimized. The use of floodant between the armor and outer jacket is not required when uniform bonding, per paragraph (k)(10) of this section, is achieved between the plastic-clad armor and the outer jacket.

(2) The flooding compound must be compatible with the jacket when tested in accordance with ASTM D 4568–86 at a temperature of 80°C. The floodant must exhibit adhesive properties sufficient to prevent jacket slip when tested in accordance with the requirements of appendix A, paragraph (III)(3) of this section.

(3) The individual cable manufacturer must satisfy REA that the flooding compound selected for use is acceptable for the application.

(4) In lieu of a flooding compound, a water blocking tape may be applied between the inner jacket and armor and between the armor and outer jacket to prevent water migration. The use of the water blocking tape between the armor and outer jacket is not required when uniform bonding, per paragraph (k)(10) of this section, is achieved between the plastic-clad armor and the outer jacket.

(k) *Armor.* (1) A steel armor, plastic coated on both sides, is required for direct buried cable manufactured under the provisions of this section. An armor is optional for duct and aerial cable as required by the purchaser. The plastic coated steel armor must be applied longitudinally directly over the core wrap or the intermediate jacket and have a minimum overlap of 3.0 millimeters.

(2) The uncoated steel tape must be electrolytic chrome coated steel (ECCS) with a thickness of 0.155 ± 0.015 millimeters.

(3) The reduction in thickness of the armoring material due to the corrugating or to the application process must be kept to a minimum and must not exceed 10 percent at any spot.

(4) The armor of each length of cable must be electrically continuous with no more than one joint or splice allowed per kilometer of cable. This requirement does not apply to a joint or splice made

in the raw material by the raw material manufacturer.

(5) The breaking strength of any section of an armor tape, containing a factory splice joint, must not be less than 80 percent of the breaking strength of an adjacent section of the armor of equal length without a joint.

(6) Overlap portions of the armor tape must be bonded in cables with no floodant over the armor. If the tape is corrugated, the corrugations must be in register.

(7) The armor tape must be so applied as to enable the cable to pass the bend test as specified in paragraph (q)(1) of this section.

(8) The protective coating on the steel armor must meet the Bonding-to-Metal, Heat Sealability, Lap-Shear and Moisture Resistance requirements of Type I, Class 2 coated metals in accordance with ASTM B 736–92a.

(9) The ability of the plastic-clad metal to resist the flooding compound must be determined as required by ASTM D 4568–86 using a one meter length of coated steel which must be aged for 7 days at 68 ± 1°C. There must be no delamination of the coating from the steel at the conclusion of the test.

(10) When the jacket is bonded to the plastic coated armor, the bond between the plastic coated armor and the outer jacket must not be less than 525 newtons per meter over at least 90 percent of the cable circumference when tested in accordance with ASTM D 4565–90a.

(l) *Optional support messenger (aerial cable).* (1) When a self-supporting aerial cable containing an integrated support messenger is supplied, the support messenger must comply with the requirements specified in paragraphs (l)(2) introductory text through (l)(6) of this section.

(2) The fully flooded, stranded support messenger must be 6.35 millimeters diameter, 7 wire, extra high strength grade, Class A galvanized steel strand conforming to ASTM A 640–91 with the following exceptions and additional provisions:

(i) The maximum lay of the individual wires of the strand must be 140 millimeters;

(ii) Any section of a completed strand containing a joint must have minimum tensile strength and elongation of 29,500 newtons and 3.5 percent, respectively, when tested in accordance with the procedures specified ASTM A 640–91; and

(iii) The individual wires from a completed strand which contain joints must not fracture when tested according to the "Ductility of Steel" procedures specified in ASTM A 640–91 except that the mandrel diameter must be equal to 5 times the nominal diameter of the individual wires.

(3) The support strand must be completely covered with a corrosion protective floodant. The floodant must be homogeneous and uniformly mixed.

(4) The floodant must be nontoxic and present no dermal hazard.

(5) The floodant must be free from dirt, metallic particles, and other foreign matter that may interfere with the performance of the cable.

(6) The floodant must be compatible with the polyethylene outer jacket and must be acceptable to REA.

(7) Other methods of providing self-supporting cable specifically not addressed in this section may be allowed if accepted by REA. Justification for acceptance of a modified design must be provided to substantiate product utility and long term stability and endurance.

(m) *Outer jacket.* (1) The outer jacket must provide the cable with a tough, flexible, protective covering which can withstand exposure to sunlight, to atmosphere temperatures and to stresses reasonably expected in normal installation and service.

(2) The jacket must be free from holes, splits, blisters, or other imperfections and must be as smooth and concentric as is consistent with the best commercial practice.

(3) The raw material used for the outer jacket must be one of the five types listed in paragraphs (m)(3)(i) through (m)(3)(vii) of this section. The raw material must contain an antioxidant to provide long term stabilization and the materials must contain a 2.60 ± 0.25 percent concentration of furnace black to provide ultraviolet shielding. Both the antioxidant and furnace black must be compounded into the material by the raw material supplier.

(i) Low density, high molecular weight polyethylene (LDHMW) must conform to the requirements of ASTM D 1248–84(1989), Type I, Class C, Category 4 or 5, Grade J3.

(ii) Low density, high molecular weight ethylene copolymer (LDHMW) must conform to the requirements of ASTM D 1248–84(1989), Type I, Class C, Category 4 or 5, Grade J3.

(iii) Linear low density, high molecular weight polyethylene (LLDHMW) must conform to the requirements of ASTM D 1248–84(1989), Type I, Class C, Category 4 or 5, Grade J3.

(iv) High density polyethylene (HD) must conform to the requirements of ASTM D 1248–84(1989), Type III, Class C, Category 4 or 5, Grade J4.

(v) Medium density polyethylene (MD) must conform to the requirements of ASTM D 1248–84(1989), Type II, Class C, Category 4 or 5, Grade J4.

(vi) Particle size of the carbon selected for use must not average greater than 20 nanometers.

(vii) Absorption coefficient must be a minimum of 400 in accordance with the procedures of ASTM D 3349–86.

(4) The outer jacketing material removed from or tested on the cable must be capable of meeting the following performance requirements:

Property	LLDHMW, Ethylene Copolymer	LDHMW Polyethylene	HD or MD Polyethylene
Melt Flow Rate Percent increase from raw material, Maximum		50	50
<0.41 (Initial Melt Index)	100	—	—
0.41–2.00 (Initial Melt Index)	50	—	—
Tensile Strength Minimum, Megapascals	12	12	16.5
Ultimate Elongation Minimum, Percent	400	400	300
Environmental Stress Cracking Maximum, Failures	0/10	2/10	2/10
Shrinkback Maximum, Percent	5	5	5
Impact Maximum, Failures	2/10	2/10	2/10

(5) *Testing procedures.* The procedures for testing jacket specimens for compliance with paragraph (m)(4) of this section must be as follows:

(i) *Melt flow rate.* The melt flow rate must be determined by ASTM D 1238–90b, Condition E. Jacketing material

must be free from flooding and filling compound.

(ii) *Tensile strength and ultimate elongation.* Test in accordance with ASTM D 4565–90a, using a jaw separation speed of 500 millimeters per minute for low density material and 50 millimeters per minute for high and medium density materials.

(iii) *Environmental stress cracking.* Test in accordance with ASTM D 4565–90a.

(iv) *Shrinkback.* Test in accordance with the procedures specified in ASTM D 4565–90a using a temperature of 100 ± 1°C for low density material and a test temperature of 115 ± 1°C for high and medium density materials.

(v) *Impact.* The test must be performed in accordance with ASTM D 4565–90a using an impact force of 4 newton-meters at a temperature of −20 ± 2°C. A cracked or split jacket constitutes failure.

(6) *Jacket thickness.* The nominal outer jacket thickness must be 1.3 millimeters. The test method used must either be the End Sample Method (paragraph (m)(6)(i) of this section) or the Continuous Uniformity Thickness Gauge Method (paragraph (m)(6)(ii) of this section).

(i) *End sample method.* The jacket must be capable of meeting the following requirements:

Minimum Average Thickness.	90 percent (%) of nominal thickness
Minimum Spot Thickness.	70% of nominal thickness

(ii) *Continuous uniformity thickness gauge.* (A) The jacket must be capable of meeting the following requirements:

Minimum Average Thickness.	75% of nominal thickness
Minimum Thickness.	70% of nominal thickness
Maximum Eccentricity.	40%

$$\text{Eccentricity} = \frac{\text{Max. Thickness} - \text{Min. Thickness}}{\text{Average Thickness}} \times 100 \text{ Percent}$$

(B) The maximum and minimum thickness values shall be based on the average of each axial section.

(7) For jackets having embedded strength members, the jacket thickness must meet the requirements of paragraph (m)(6) of this section except that the jacket thickness over the strength members must not be less than 0.50 millimeters.

(8) The minimum jacket thickness at any point over the support messenger for self-supporting aerial cable utilizing such an element must be 1.1 millimeters.

(9) The web dimension for self-supporting aerial cable utilizing such a feature must be as follows:

Height: 2.29 ± 0.750 millimeters

Width: 1.52 +0.51 millimeters/−0.25 millimeters

(n) *Sheath slitting cord (optional).* (1) A sheath slitting cord is optional.

(2) When a sheath slitting cord is used it must be nonhygroscopic and nonwicking, continuous throughout a length of cable and of sufficient strength to open the sheath without breaking the cord.

(o) *Identification marker and length marker.* (1) Each length of cable must be permanently labeled either OPTICAL CABLE or OC on the outer jacket and identified as to manufacturer and year of manufacture.

(2) Mark the number of fibers on the jacket.

(3) The markings must be printed on the jacket at regular intervals of not more than 2 meters.

(4) An alternative method of marking may be used if acceptable to REA.

(5) The completed cable must have sequentially numbered length markers IN METERS OR FEET at regular intervals of not more than 2 meters along the outside of the jacket.

(6) Continuous sequential numbering must be employed in a single length of cable.

(7) The numbers must be dimensioned and spaced to produce good legibility and must be approximately 3 millimeters in height. An occasional illegible marking is permissible if there is a legible marking located not more than 2 meters from it.

(8) The method of marking must be by means of suitable surface markings producing a clear, distinguishable, contrasting marking acceptable to REA. Where direct or transverse printing is employed, the characters should be indented to produce greater durability of marking. Any other method of length marking must be acceptable to REA as producing a marker suitable for the field. Size, shape and spacing of numbers, durability, and overall legibility of the marker will be considered in acceptance of the method.

(9) Agreement between the actual length of the cable and the length marking on the cable jacket must be within the limits of +1 percent, −0 percent.

(10) The color of the initial marking must be white or silver. If the initial marking fails to meet the requirements of the preceding paragraphs, it will be permissible to either remove the defective marking and re-mark with the white or silver color or leave the defective marking on the cable and re-mark with yellow. No further re-marking is permitted. Any re-marking must be on a different portion of the cable circumference than any existing marking when possible and have a numbering sequence differing from any other existing marking by at least 3,000.

(11) Any reel of cable that contains more than one set of sequential markings must be labeled to indicate the color and sequence of marking to be used. The labeling must be applied to the reel and also to the cable.

(p) *Optical performance.* (1) The optical performance of the single mode fibers must be in accordance with the requirements specified in paragraphs (p)(1)(i) through (p)(1)(viii) of this section.

(i) The attenuation values of the single mode fibers within the cable must not exceed 0.5 decibel per kilometer (dB/km) for dispersion-unshifted single mode fiber at 1310 and 1550 nanometers and must not exceed 0.5 dB/km for dispersion-shifted single mode fiber at 1550 nanometers. The test method used for measuring the attenuation must be in accordance with either:

(A) EIA/TIA-455–78A;

(B) EIA/TIA-455–59; or

(C) EIA/TIA 455–61.

(ii) The attenuation values for wavelengths between 1285 and 1330 nanometers and between 1525 and 1575 nanometers for dispersion-unshifted fibers must not exceed the attenuation at 1310 and 1550 nanometers by more than 0.1 dB/km. The attenuation values for wavelengths between 1525 and 1575 nanometers for dispersion-shifted fibers must not exceed the attenuation at 1550 nanometers by more than 0.1 dB/km. The test method used for measuring the attenuation must be in accordance with any one of the methods specified in paragraph (p)(1)(i) of this section.

(iii) Attenuation discontinuities in the fiber's length must not exceed 0.1 decibel (dB) for dispersion-unshifted fiber at 1310 ± 20 and 1550 ± 20 nanometers and must not exceed 0.1 dB for dispersion-shifted fiber at 1550 ± 20 nanometers when measured in accordance with EIA/TIA-455–59.

(iv) Measurement of the attenuation must be conducted at the wavelength specified for application and must be expressed in decibels per kilometer.

(v) Because the accuracy of attenuation measurements for single mode fibers becomes questionable when measured on short cable lengths, attenuation measurements are to be made utilizing characterization cable lengths. If the ship length of cable is less

than one kilometer, the attenuation values measured on longer lengths of cable (characterization length of cable) before cutting to the ship lengths of cable may be applied to the ship lengths.

(vi) For dispersion-unshifted fiber the zero dispersion wavelength must be between 1300 and 1322 nanometers, and the maximum value of the dispersion slope at the zero-dispersion wavelength must not be greater than 0.092 picosecond per newton-meter squared times kilometer (ps/(nm²•km) when measured in accordance with either:

(A) EIA-455–168;
(B) EIA-455–169; or
(C) EIA/TIA-455–175.

(vii) For dispersion-shifted fiber, the dispersion over the wavelength range between 1525 and 1575 nanometers must not exceed 2.7 picosecond per newton-meter times kilometer (ps/(nm•km)) and must have a maximum dispersion slope of 0.085 ps/(nm²•km) at the zero dispersion wavelength when measured in accordance with any one of the test procedures specified in paragraph (p)(1)(vi) of this section.

(viii) The cut off wavelength of the dispersion-unshifted and the dispersion-shifted fibers in a cable must be less than 1250 nanometers when measured in accordance with EIA/TIA-455–170.

(2) The optical performance of the multimode fibers must be in accordance with the requirements specified in paragraphs (p)(2)(i) through (p)(2)(vi) of this section.

(i) The attenuation values of the 50/125 and 62.5/125 micrometer multimode fibers within the cable must not exceed 1.5 dB/km at 1300 nanometers when measured in accordance with either:

(A) EIA/TIA-455–46A;
(B) EIA/TIA-455–53A; or
(C) EIA/TIA-455–61.

(ii) Attenuation discontinuities in the fiber's length must not exceed 0.2 dB for both multimode fiber types at 1300 ± 20 nanometers when measured in accordance with EIA/TIA-455–59.

(iii) Measurement of the attenuation must be conducted at the wavelength specified for application and must be expressed in decibels per kilometer.

(iv) Because the accuracy of attenuation measurements for multimode fibers becomes questionable when measured on short cable lengths, attenuation measurements are to be made utilizing characterization cable lengths. If the ship length of cable is less than one kilometer, the attenuation values measured on longer lengths of cable (characterization length of cable) before cutting to the ship lengths of cable may be applied to the ship lengths.

(v) The bandwidth of the multimode fibers at the −3 dB optical power of the optical fibers within the cable must be within the limits prescribed in the purchase order.

(vi) The test methods used to measure bandwidth must be in accordance with either EIA-455–30A or EIA RS-455–51.

(3) Numerical aperture (NA) for each multimode optical fiber in the cable must be 0.20 ± 0.015 for the 50/125 micrometer design and 0.275 ± 0.015 for the 62.5/125 micrometer design when measured in accordance with EIA/TIA 455–177.

(q) *Mechanical requirements*—(1) *Cable bend test.* (i) All cables manufactured in accordance with the requirements of this section must be capable of meeting the following bend test without exhibiting an increase in fiber attenuation greater than 0.10 dB for single mode fibers and 0.30 dB for multimode fibers.

(ii) Measure the attenuation of dispersion-unshifted single mode fibers at 1310 ± 20 and 1550 ± 20 nanometers, dispersion-shifted single mode fibers at 1550 ± 20 nanometers and multimode fibers at 1300 ± 20 nanometers.

(iii) After measuring the attenuation of the optical fibers, test the cable sample in accordance with EIA RS-455–37, Test Condition C, Turns Test Level 3. The following detailed test conditions shall apply:

(A) Section 4.2—Mandrel diameter must be 15 times the cable diameter.

(B) Section 4.5—Measure the attenuation increase of the wound sample at the test temperature and specified wavelengths in accordance with EIA RS-455–20.

(C) For armored cable, the armor overlap must be on the outside of the bend.

(D) For self-supporting cable, the jacketed support messenger and connection web must be removed prior to testing.

(iv) The cable may be allowed to warm to room temperature before visual inspection. The bent area of the cable must show neither visible evidence of fracture of the jacket nor delamination of the bond at the overlap and to the outer jacket in nonflooded cable. After removal of the jacket, there must be no visible evidence of fracture of the armor, when present, and of the components in the core.

(2) *Cable impact test.* (i) All cables manufactured in accordance with the requirements of this section must be capable of meeting the following impact test without exhibiting an increase in fiber attenuation greater than 0.10 dB for single mode fibers and 0.30 dB for multimode fibers, and without cracking or splitting of the cable jacket.

(ii) Measure the attenuation of the optical fibers in accordance with paragraph (q)(1)(ii) of this section.

(iii) After measuring the attenuation of the optical fibers, test the cable in accordance with EIA/TIA-455–25A.

(3) *Cable compression test.* (i) All cables manufactured in accordance with the requirements of this section must be capable of meeting the following compressive strength test without exhibiting an increase in fiber attenuation greater than 0.10 dB for single mode fibers and 0.3 dB for multimode and without cracking or splitting of the cable jacket when subjected to a minimum compressive load of 440 newtons per centimeter for armored cable and 220 newtons per centimeter for nonarmored cable.

(ii) Measure the attenuation of the optical fibers in accordance with paragraph (q)(1)(ii) of this section.

(iii) After measuring the attenuation of the optical fibers, test the cable in accordance with EIA-455–41 using a rate of 5 millimeters per minute and maintaining the load for 15 minutes.

(4) *Cable twist test.* (i) All cables manufactured in accordance with the requirements of this section must be capable of meeting the following twist test without exhibiting an increase in fiber attenuation greater than 0.10 dB for single mode fibers and 0.30 dB for multimode fibers, and without cracking or splitting of the cable jacket.

(ii) Measure the attenuation of the optical fibers in accordance with paragraph (q)(1)(ii) of this section.

(iii) After measuring the attenuation of the optical fibers, test the cable in accordance with EIA-455–85, using a maximum cable twisting length of 4 meters.

(5) *Cable flex test.* (i) All cables manufactured in accordance with the requirements of this section must be capable of meeting the following flex test without exhibiting an increase in fiber attenuation greater than 0.10 dB for single mode fibers and 0.30 dB for multimode fibers.

(ii) Measure the attenuation of the optical fibers in accordance with paragraph (q)(1)(ii) of this section.

(iii) After measuring the attenuation of the optical fibers, test the cable in accordance with EIA-455–104, Test Conditions I and II, flexed for 25 cycles using a sheave diameter not less than 20 times the cable diameter (Test condition letter B).

(iv) After completion of the test, the bent area of the cable must show neither visible evidence of fracture of the jacket nor delamination of the bond at the overlap and to the outer jacket in nonflooded cable. After removal of the jacket, there must be no visible evidence of fracture of the armor, when present, and of the components in the core.

(6) *Water penetration test.* (i) A one meter length of completed fiber optic cable must be preconditioned for 24 hours at 23 ± 5°C and then tested in accordance with EIA-455–82A using a one meter water head over the sample or placed under the equivalent continuous pressure for one hour.

(ii) After the one hour period, there must be no water leakage through the sheath interfaces, under the core wrap, between the cable core interstices, or through the fiber buffers.

(iii) If water leakage is detected in the first sample, one additional 3 meter sample from EACH END of the same reel must be tested in accordance with paragraph (q)(6)(i) of this section. If either sample exhibits water leakage, the entire reel of cable is to be rejected. If the samples exhibit no leakage, the entire reel of cable is considered acceptable.

(7) *Compound flow test.* (i) Three 300 millimeter long test samples must be preconditioned for 24 hours at 23 ± 5°C and then tested in accordance with EIA-455–81A using a test temperature of 80 ± 1°C.

(ii) The amount of filling or flooding compounds that flowed or dripped from any of the suspended cable specimens must be less than or equal to 0.5 grams of material. The measurement of an amount greater than 0.5 grams for any of the suspended cable specimens constitutes failure.

(r) *Preconnectorized cable (optional).* (1) At the option of the manufacturer and upon request by the purchaser, the cable may be factory terminated with connectors acceptable to REA.

(2) All connectors must be accepted by REA prior to their use.

(s) *Acceptance testing and extent of testing.* (1) The tests described in appendix A of 7 CFR 1755.900 are intended for acceptance of cable designs and major modifications of accepted designs. REA decides what constitutes a major modification. These tests are intended to show the inherent capability of the manufacturer to produce cable products that have satisfactory performance characteristics, long life and long-term optical stability but are not intended as field tests.

(2) For initial acceptance, the manufacturer must submit:

(i) An original signature certification that the product fully complies with each section of the specification;

(ii) Qualification Test Data, per appendix A;

(iii) A set of instructions for handling the cable;

(iv) OSHA Material Safety Data Sheets for all components;

(v) To periodic plant inspections;

(vi) A certification that the product does or does not comply with the domestic origin manufacturing provisions of the "Buy American" requirements of the Rural Electrification Act of 1938 (7 U.S.C. 901 *et seq.*);

(vii) Written user testimonials concerning field performance of the product; and

(viii) Other nonproprietary data deemed necessary by the Chief, Outside Plant Branch (Telephone).

(3) For requalification acceptance, the manufacturer must submit an original signature certification that the product fully complies with each section of the specification, excluding the Qualification Section, and a certification that the product does or does not comply with the domestic origin manufacturing provisions of the "Buy American" requirements of the Rural Electrification Act of 1938 (7 U.S.C. 901 *et seq.*), for acceptance by September 30 every three years. The required data and certification must have been gathered within 90 days of the submission.

(4) Initial and requalification acceptance requests should be addressed to:

Chairman, Technical Standards Committee "A" (Telephone), Telecommunications Standards Division, Rural Electrification Administration, Washington, DC 20250–1500.

(5) *Tests on 100 percent of completed cable.* (i) The armor for each length of cable must be tested for continuity using the procedures of ASTM D 4566–90.

(ii) Attenuation for each optical fiber in the cable must be measured.

(iii) Optical discontinuities must be isolated and their location and amplitude recorded.

(6) *Capability tests.* Tests on a quality assurance basis must be made as frequently as is required for each manufacturer to determine and maintain compliance with:

(i) Numerical aperture and bandwidth of multimode fibers;

(ii) Cut off wavelength of single mode fibers;

(iii) Dispersion of single mode fibers;

(iv) Shrinkback and cold bend testing of loose tube and tight tube buffers;

(v) Adhesion properties of the protective fiber coating;

(vi) Dielectric strength between the armor and the metallic central member;

(vii) Performance requirements for the inner and outer jacketing materials;

(viii) Performance requirements for the filling and flooding compounds;

(ix) Bonding properties of the coated armoring material;

(x) Sequential marking and lettering;

(xi) Cable bend and cable impact tests;

(xii) Water penetration and compound flow tests;

(xiii) Cable twist, cable flex, and cable compression tests; and

(xiv) Performance requirements of support messenger.

(t) *Records of optical and physical tests.* (1) Each manufacturer must maintain suitable summary records for a period of at least 3 years of all optical and physical tests required on completed cable by this section as set forth in paragraphs (s)(5) and (s)(6) of this section. The test data for a particular reel must be in a form that it may be readily available to REA upon request. The optical data must be furnished to the purchaser on a suitable and easily readable form.

(2) Measurements and computed values must be rounded off to the number of places or figures specified for the requirement according to ASTM E 29–90.

(u) *Manufacturing irregularities.* (1) Repairs to the armor, when present, are not permitted in cable supplied to end users under this section.

(2) Minor defects in the inner and outer jacket (defects having a dimension of 3 millimeter or less in any direction) may be repaired by means of heat fusing in accordance with good commercial practices utilizing sheath grade compounds.

(3) Buffer tube repair is permitted only in conjunction with fiber splicing.

(v) *Packaging and preparation for shipment.* (1) The cable must be shipped on reels. The diameter of the drum must be large enough to prevent damage to the cable from reeling and unreeling. The reels must be substantial and so constructed as to prevent damage during shipment and handling.

(2) A circumferential thermal wrap or other means of protection complying with the requirements of appendix B of this section must be secured between the outer edges of the reel flange to protect the cable against damage during storage and shipment.

(3) Cable manufactured to the requirements of this section must be sealed at the ends to prevent entrance of moisture. The method of sealing must be accepted by REA prior to its use.

(4) The end-of-pull (outer end) of the cable must be securely fastened to prevent the cable from coming loose during transit. The start-of-pull (inner

end) of the cable must project through a slot in the flange of the reel, around an inner riser, or into a recess on the reel flange near the drum and fastened in such a way to prevent the cable from becoming loose during installation.

(5) Spikes, staples or other fastening devices must be used in a manner which will not result in penetration of the cable.

(6) The arbor hole must admit a spindle 63.5 millimeters in diameter without binding. Steel arbor hole liners may be used but must be accepted by REA prior to their use.

(7) Each reel must be plainly marked to indicate the direction in which it should be rolled to prevent loosening of the cable on the reel.

(8) Each reel must be stenciled or lettered with the name of the manufacturer.

(9) The following information must be either stenciled on the reel or on a tag firmly attached to the reel:

OPTICAL CABLE
Number of Fibers
Armored or Nonarmored
Year of Manufacture
Name of Cable Manufacturer
Length of Cable
Reel Number
REA 7 CFR 1755.900

Example:

OPTICAL CABLE
4 fiber
Armored
1988
XYZ Company
1050 meters
Reel Number 3
REA 7 CFR 1755.900

(10) When preconnecterized cable is shipped, the splicing modules must be protected to prevent damage during shipment and handling. The protection method must be accepted by REA prior to its use.

(The information and recordkeeping requirements of this section have been approved by the Office of Management and Budget (OMB) under the control number 0572–0077.)

Appendix A to 7 CFR 1755.900—Qualification Tests Methods

(I) The test procedures described in this appendix are for qualification of initial cable designs and major modifications of accepted designs. Included in (V) of this appendix are suggested formats that may be used in submitting test results to REA.

(II) *Sample selection and preparation.* (1) All testing must be performed on lengths removed sequentially from any of the same cables listed below. The cables must not have been exposed to temperatures in excess of 38°C since their initial cool downs after sheathing. The lengths specified are minimum lengths and if desirable from a laboratory testing standpoint longer lengths may be used:

(a) 12 single mode fiber jacketed cable consisting of six single mode dispersion-unshifted fibers and six single mode dispersion-shifted fibers.

(b) 12 multimode fiber jacketed cable consisting of six 50/125 micrometer multimode fibers and six 62.5/125 micrometer multimode fibers.

(c) 24 fiber jacketed combination cable consisting of six single mode dispersion-unshifted fibers; six single mode dispersion-shifted fibers; six 50/125 micrometer multimode fibers; and six 62.5/125 micrometer multimode fibers.

(2) Length A shall be a minimum of 500 meters long. Coil the sample with a diameter of 15 to 20 times its sheath diameter. Three lengths are required if only requesting acceptance for either single mode fiber cable (a), multimode fiber cable (b), or using the combination fiber cable (c). Six lengths, 3 lengths of single mode fiber cable (a), and 3 lengths of multimode fiber cable (b), are required if requesting acceptance for both single mode and multimode fiber cables.

(3) Length B shall be one meter long. Four lengths of either single mode fiber cable (a), multimode fiber cable (b) or the combination fiber cable (c) are required.

(4) Length C shall be 600 millimeters long. Four lengths of either single mode fiber cable (a), multimode fiber cable (b) or the combination fiber cable (c) are required.

(5) *Data reference temperature.* Unless otherwise specified, all measurement shall be made at 23 ± 5°C.

(III) *Environmental tests*—(1) *Heat Aging Test*—(a) *Test Samples.* Place one or two samples of length A and one sample each of lengths B and C in an oven or environmental chamber. The ends of sample A must exit from the chamber or oven for optical tests. Securely seal the oven exit holes.

(b) *Sequence of tests.* After conditioning the samples are to be subjected to the following tests:

(i) Water Penetration Test outlined in (III)(2) of this appendix; and

(ii) Jacket Slip Strength Test outlined in (III)(3) of this appendix. (For Flooded Designs Only)

(c) *Initial measurements.* (i) For sample(s) A measure the attenuation for the single mode dispersion-unshifted fibers at 1310 and 1550 nanometers, for single mode dispersion-shifted fibers at 1550 nanometers and/or for multimode fibers at 1300 nanometers at a temperature of 23 ± 5°C. Also measure the bandwidth of the multimode fibers. Calculate the attenuation data on a per kilometer basis. Calculate the bandwidth data on a megahertz-kilometer (MHz-km) basis.

(ii) Record on suggested formats in (V) of this appendix or on other easily readable formats.

(d) *Heat conditioning.* (i) Immediately after completing the initial measurements, condition the sample(s) for 14 days at a temperature of 65 ± 2°C.

(ii) At the end of this period note any exudation of cable filler. Measure the parameters given in (III)(1)(c) of this appendix. Record on suggested formats in (V) of this appendix or on other easily readable formats.

(e) *Overall optical deviation.* (i) Calculate the change in all parameters between the final parameters after conditioning with initial parameters in (III)(1)(c) of this appendix.

(ii) The stability of the optical parameters after completion of this test must be within the following prescribed limits:

(A) *Attenuation.* The attenuation of each multimode fiber must not change by more than 0.3 db/km and the attenuation of each single mode fiber must not change by more than 0.1 dB/km.

(B) *Bandwidth.* The bandwidth of each multimode fiber must not change by more than 15 percent from their original values.

(2) *Water penetration testing.* (a) A watertight closure must be placed over the jacket of length B from (III)(1)(a) of this appendix. The closure must not be placed over the jacket so tightly that the flow of water through pre-existing voids or air spaces is restricted. The other end of the sample must remain open.

(b) Test per Option A or Option B. (i) *Option A.* Weigh the sample and closure prior to testing. Fill the closure with water and place under a continuous pressure of 10 ± 0.7 kilopascals for one hour. Collect the water leakage from the end of the test sample during the test and weigh to the nearest 0.1 gram. Immediately after the one hour test, seal the ends of the cable with a thin layer of grease and remove all visible water from the closure, being careful not to remove water that penetrated into the core during the test. Reweigh the sample and determine the weight of water that penetrated into the core.

(ii) *Option B.* Fill the closure with a 0.2 gram sodium fluorscein per liter water solution and apply a continuous pressure of 10 ± 0.7 kilopascals for one hour. Catch and weigh any water that leaks from the end of the cable during the one hour period. If no water leaks from the sample, carefully remove the water from the closure. Then carefully remove the outer jacket, armor, if present, inner jacket, if present, and core wrap one at a time, examining with an ultraviolet light source for water penetration. After removal of the core wrap, carefully dissect the core and examine for water penetration within the core. Where water penetration is observed, measure the penetration distance.

(3) *Jacket slip strength test* (For Flooded Design Only)—(a) *Sample Selection.* Test sample C from (III)(1)(a) of this appendix.

(b) *Sample preparation.* Prepare test sample in accordance with the procedures specified in ASTM D 4565–90a.

(c) *Sample conditioning and testing.* Remove the sample from the tensile tester prior to testing and condition for one hour at 50 ± 2°C. Test immediately in accordance with the procedures specified in ASTM D 4565–90a. A minimum jacket slip strength of 67 newtons is required. Record the load attained on the suggested formats in (V) of this appendix or on other easily readable formats.

(4) *Temperature and humidity exposure.* (a) Repeat steps (III)(1)(a) through (III)(1)(c)(ii) of this appendix for separate set of samples A, B, and C which have not been subjected to prior environmental conditioning.

(b) Immediately after completing the measurements, expose the test sample to 100

temperature cyclings. Relative humidity within the chamber shall be maintained at 90 ± 2 percent. One cycle consists of beginning at a stabilized chamber and test sample temperature of 52 ± 2°C, increasing the temperature to 57 ± 2°C, allowing the chamber and test samples to stabilize at this level, then dropping the temperature back to 52 ± 2°C.

(c) Repeat steps (III)(1)(d)(ii) through (III)(3)(c) of this appendix.

(5) *Temperature cycling.* (a) Repeat steps (III)(1)(a) through (III)(1)(c)(ii) of this appendix for separate set of samples A, B, and C which have not been subjected to prior environmental conditioning.

(b) Immediately after completing the measurements, subject the test sample to 10 cycles of temperature between −40°C and +60°C. The test sample must be held at each temperature extreme for a minimum of 1.5 hours during each cycle of temperature. The air within the temperature cycling chamber must be circulated throughout the duration of the cycling.

(c) Repeat steps (III)(1)(d)(ii) through (III)(3)(c) of this appendix.

(IV) *Control sample*—(a) *Test samples.* A separate set of lengths B and C must have been maintained at 23 ± 5°C for at least 48 hours before the testing.

(b) Repeat steps (III)(2) through (III)(3)(c) of this appendix for these samples.

(V) The following suggested formats may be used in submitting the test results to REA:

HEAT AGING TEST—SINGLE MODE CABLE

Fiber No.	Attenuation—1310 nm			Attenuation—1550 nm		
	dB/km			dB/km		
	Initial	Final	Change	Initial	Final	Change
1						
2						
3						
4						
5						
6						
7						
8						
9						
10						
11						
12						

HEAT AGING TEST—MULTIMODE CABLE

Fiber No.	Attenuation—1300 nm			Bandwidth		
	dB/km			MHz-km		
	Initial	Final	Change	Initial	Final	Change(%)
1						
2						
3						
4						
5						
6						
7						
8						
9						
10						
11						
12						

HEAT AGING TEST—COMBINATION CABLE

Fiber No.	Attenuation—1310 nm			Attenuation—1550 nm			Bandwidth		
	dB/km			dB/km			MHz-km		
	Initial	Final	Change	Initial	Final	Change	Initial	Final	Change(%)
1									
2									
3									
4									
5									
6									
7									
8									
9									
10									
11									
12									
13									
14									
15									
16									
17									
18									
19									
20									
21									
22									
23									
24									

TEMPERATURE/HUMIDITY TEST—SINGLE MODE CABLE

Fiber No.	Attenuation—1310 nm			Attenuation—1550 nm		
	dB/km			dB/km		
	Initial	Final	Change	Initial	Final	Change
1						
2						
3						
4						
5						
6						
7						
8						
9						
10						
11						
12						

TEMPERATURE/HUMIDITY TEST—MULTIMODE CABLE

Fiber No.	Attenuation—1300 nm			Bandwidth		
	dB/km			MHz-km		
	Initial	Final	Change	Initial	Final	Change(%)
1						
2						
3						
4						
5						
6						
7						
8						
9						
10						
11						
12						

TEMPERATURE/HUMIDITY TEST—COMBINATION CABLE

Fiber No.	Attenuation—1310 nm			Attenuation—1550 nm			Bandwidth		
	dB/km			dB/km			MHz-km		
	Initial	Final	Change	Initial	Final	Change	Initial	Final	Change(%)
1									
2									
3									
4									
5									
6									
7									
8									
9									
10									
11									
12									
13									
14									
15									
16									
17									
18									
19									
20									
21									
22									
23									
24									

TEMPERATURE CYCLING TEST—SINGLE MODE CABLE

Fiber No.	Attenuation—1310 nm			Attenuation—1550 nm		
	dB/km			dB/km		
	Initial	Final	Change	Initial	Final	Change
1						
2						
3						
4						
5						
6						
7						
8						
9						
10						
11						
12						

TEMPERATURE CYCLING TEST—MULTIMODE CABLE

Fiber No.	Attenuation—1300 nm			Bandwidth		
	dB/km			MHz-km		
	Initial	Final	Change	Initial	Final	Change(%)
1						
2						
3						
4						
5						
6						
7						
8						
9						
10						
11						
12						

TEMPERATURE CYCLING TEST COMBINATION CABLE

Fiber No.	Attenuation—1310 nm			Attenuation—1550 nm			Bandwidth		
	dB/km			dB/km			MHz-km		
	Initial	Final	Change	Initial	Final	Change	Initial	Final	Change(%)
1									
2									
3									
4									
5									
6									
7									
8									
9									
10									
11									
12									
13									
14									
15									
16									
17									
18									
19									
20									
21									
22									
23									
24									

WATER PENETRATION TEST

	Option A		Option B	
	End Leakage grams	Weight Gain grams	End Leakage grams	Penetration millimeters
Control				
Heat Age				
Humidity Exposure				
Temperature Cycling				

JACKET SLIP STRENGTH @ 50°C

	Load in Newtons
Control	
Heat Age	
Humidity Exposure	
Temperature Cycling	

FILLER EXUDATION (GRAMS)

Heat Age	
Humidity Exposure	
Temperature Cycle	

Appendix B to 7 CFR 1755.900—Thermal Reel Wrap Qualification

(I) The test procedures described in this appendix are only for qualification of initial and subsequent changes in thermal reel wraps.

(II) *Sample Selection.* All testing must be performed on two 450 millimeter lengths of cable removed sequentially from the same fiber jacketed cable. This cable must not have been exposed to temperatures in excess of 38°C since its initial cool down after sheathing.

(III) *Test Procedure.* (1) Place the two samples on an insulating material such as wood.

(2) Tape thermocouples to the jackets of each sample to measure the jacket temperature.

(3) Cover one sample with the thermal reel wrap.

(4) Expose the samples to a radiant heat source capable of heating the uncovered jacket sample to a minimum of 71°C. A GE 600 watt photoflood lamp or an equivalent lamp having the light spectrum approximately that of the sun shall be used.

(5) The height of the lamp above the jacket shall be 380 millimeters or an equivalent height that produces the 71°C jacket temperature on the unwrapped sample shall be used.

(6) After the samples have stabilized at the temperature, the jacket temperatures of the samples shall be recorded after one hour of exposure to the heat source.

(7) Compute the temperature difference between jackets.

(8) For the thermal reel wrap to be acceptable to REA, the temperature difference between the jacket with the thermal reel wrap and the jacket without the reel wrap shall be greater than or equal to 17°C.

Dated: August 7, 1993.

Bob J. Nash,

Under Secretary, Small Community and Rural Development.

[FR Doc 93–19995 Filed 8–31–93; 8:45 am]

BILLING CODE 3410–15–F

7 CFR Part 1755

Specification for Outside Plant Housings and Serving Area Interface Systems

AGENCY: Rural Electrification Administration, USDA.

ACTION: Proposed rule.

SUMMARY: The Rural Electrification Administration (REA) proposes to amend its regulations on Telecommunications Standards and Specifications for Materials, Equipment and Construction, by codifying the REA Specification for Outside Plant Housings and Serving Area Interface Systems. The new specification informs manufacturers and users of outside plant housings and serving area interface systems of the engineering and technical requirements that are considered necessary for satisfactory performance in outside plant environments.

DATES: Comments concerning this proposed rule must be received by REA or postmarked no later than October 1, 1993.

ADDRESSES: Comments should be mailed to the Director,

Telecommunications Standards Division, Rural Electrification Administration, room 2835, South Building, U.S. Department of Agriculture, Washington, DC 20250–1500. REA requests an original and three copies of all comments (7 CFR part 1700). All comments received will be made available for public inspection at room 2835, South Building, U.S. Department of Agriculture, Washington, DC 20250–1500 between 8 a.m. and 4 p.m. (7 CFR 1.27(b)).

FOR FURTHER INFORMATION CONTACT: Garnett G. Adams, Chief, Outside Plant Branch, Telecommunications Standards Division, Rural Electrification Administration, room 2844, South Building, U.S. Department of Agriculture, Washington, DC 20250–1500, telephone number (202) 720–0667.

SUPPLEMENTARY INFORMATION:

Executive Order 12291

This proposed rule has been issued in conformance with Executive Order 12291 and Departmental Regulation 1512–1. This action has been classified as "nonmajor" because it does not meet the criteria for a major regulation as established by the Order.

Regulatory Flexibility Act Certification

The Administrator of REA has determined that this proposed rule will not have a significant impact on a substantial number of small entities, as defined by the Regulatory Flexibility Act (5 U.S.C. *et seq.*). This proposed rule involves standards and specifications, which may increase the direct short-term costs to the REA borrower. However, the long-term direct economic costs are reduced through greater durability and lower maintenance cost over time.

Information Collection and Recordkeeping Requirements

In compliance with the Office of Management and Budget (OMB) regulations (5 CFR part 1320) which implements the Paperwork Reduction Act of 1980 (Pub. L. 96–511) and section 3504 of that Act, information collection and recordkeeping requirements contained in this proposed rule have been approved by OMB under control number 0572–0077 which expires on January 31, 1994. Comments concerning these requirements should be directed to the office of Information and Regulatory Affairs of OMB, Attention: Desk Officer for USDA, room 3201, New Executive Office Building, Washington, DC 20503.

National Environmental Policy Act Certification

The Administrator of REA, has determined that this proposed rule will not significantly affect the quality of the human environment as defined by the National Environmental Policy Act of 1969 (42 U.S.C. 4321 *et seq.*) Therefore, this action does not require an environmental impact statement or assessment.

Catalog of Federal Domestic Assistance

The program described by this proposed rule is listed in the Catalog of Federal Domestic Assistance Programs under No. 10.851, Rural Telephone Loans and Loan Guarantees, and No. 10.852, Rural Telephone Bank Loans. This catalog is available on a subscription basis from the Superintendent of Documents, the United States Government Printing Office, Washington, DC 20402.

Executive Order 12372

This proposed rule is excluded from the scope of Executive Order 12372, Intergovernmental Consultation that requires intergovernmental consultation with state and local officials. A Notice of Final rule titled Department Programs and Activities Excluded from Executive Order 12372 (50 FR 47034) exempts REA and RTB loans and loan guarantees, and RTB bank loans, to governmental and nongovernmental entities from coverage under this Order.

Executive Order 12778

This proposed rule has been reviewed under Executive Order 12778, Civil Justice Reform. If adopted, this proposed rule will not:

(1) Preempt any State or local laws, regulations, or policies;

(2) Have any retroactive effect; and

(3) Require administrative proceedings before parties may file suit challenging the provisions of this rule.

Background

REA issues publications titled "Bulletin" which serve to guide borrowers regarding already codified policy, procedures, and requirements needed to manage loans, loan guarantee programs, and the security instruments which provide for and secure REA financing. REA issues standards and specifications for the construction of telephone facilities financed with REA loan funds. REA has rescinded REA Bulletin 345–26, REA Specification for Buried Plant Housings, PE-35, dated July 23, 1976, and REA Bulletin 345–77, REA Specification for Serving Area Interface Housings, PE-79, dated January 24, 1978. REA proposes to incorporate and update the information previously contained in those bulletins in 7 CFR 1755.910, REA Specification for Outside Plant Housings and Serving Area Interface Systems.

The specification contains mechanical, electrical, and environmental requirements, desired design features, and test methods for evaluation of outside plant housings and serving area interface systems.

The test procedures described in the specification are required to demonstrate the functional reliability of outside plant housings and serving area interface systems. The test procedures satisfy the requirements of housings as well as the requirements of terminals that may be installed within housings.

Outside plant housings are fabricated of either metallic or nonmetallic materials in different sizes and configurations to suit a variety of applications. The purpose of a housing is to protect its contents from environmental elements, rodents, insects, or vandalism and unauthorized access. Outside plant housings accommodate cable splices, bonding and grounding connections, cable terminals, cross-connect facilities, load coils, and optical and electronic equipment.

Serving area interface systems serve as the connecting terminal between feeder cable and distribution cables.

A significant requirement of the 7 CFR 1755.910 involves the changing of the bonding and grounding system of outside plant housings from a 14 gauge system to a 6 gauge system. The change to the 6 gauge bonding and grounding system in the housings will help to assure that REA housings will be manufactured in compliance with recognized industry safety standards that are considered critical to the protection of outside plant telephone equipment, craft personnel, and the public.

List of Subjects in 7 CFR Part 1755

Loan programs—communications, Reporting and recordkeeping requirements, Rural areas, Telephone.

For reasons set out in the preamble, REA proposes to amend chapter XVII of title 7 of the Code of Federal Regulations as follows:

PART 1755—TELECOMMUNICATIONS STANDARDS AND SPECIFICATIONS FOR MATERIALS, EQUIPMENT AND CONSTRUCTION

1. The authority citation for part 1755 continues to read as follows:

Authority: 7 U.S.C. 901 *et seq.*, 1921 *et seq.*

2. Section 1755.910 is added as follows:

§1755.910 REA specification for outside plant housings and serving area interface systems.

(a) *Scope.* (1) The purpose of this specification is to inform manufacturers and users of outside plant housings and serving area interface (SAI) systems of the engineering and technical requirements that are considered necessary for satisfactory performance in outside plant environments. Included are the mechanical, electrical, and environmental requirements, desired design features, and test methods for evaluation of the product.

(2) The housing and terminal requirements reflect the best engineering judgment available at the present time and may be subject to change due to advances in technology, economic conditions, or other factors.

(3) The test procedures described in this section are required by REA to demonstrate the functional reliability of the product. However, other standard or unique test procedures may serve the same function. In such cases, REA shall evaluate the test procedures and results on an individual basis.

(4) The test procedures specified herein satisfy the requirements of housings as well as the requirements of terminals that may be installed within housings. Some of the requirements are interrelated to several tests designed to determine the performance aspects of terminals and are directly affected by testing required for housings. Therefore, the manufacturer should carefully review all the test requirements in order to develop a testing schedule that is comprehensive, efficient in terms of the number of test specimens required and can be accomplished in an orderly and logical sequence.

(5) The specified tests may require special facilities to comply with Federal, State, or local regulatory requirements. Some test procedures are potentially hazardous to personnel because of the high voltages and mechanical forces involved. Safety precautions are necessary to prevent injury.

(6) Underwriters Laboratories, Inc. (UL) 94, Tests for Flammability of Plastic Materials for Parts in Devices and Appliances, dated June 18, 1991, referenced in this section is incorporated by reference by REA. This incorporation by reference was approved by the Director of the Federal Register in accordance with 5 U.S.C. 552(a) and 1 CFR part 51. A copy of the UL standard is available for inspection during normal business hours at REA, room 2845, U.S. Department of Agriculture, Washington, DC 20250–1500 or at the Office of the Federal Register, 800 North Capitol Street, NW., suite 700, Washington, DC. Copies are available from UL Inc., 333 Pfingsten Road, Northbrook, Illinois 60062–2096, telephone number (708) 272–8800. [**Note:** The incorporation by reference and availability of inspection copies are pending approval by the Office of the Federal Register.]

(7) The American Society for Testing and Materials Specifications (ASTM) A 109–91, Standard Specification for Steel, Strip, Carbon, Cold-Rolled; ASTM A 153–82(1987), Standard Specification for Zinc Coating (Hot-Dip) on Iron and Steel Hardware; ASTM A 366/A 366M–91, Standard Specification for Steel, Sheet, Carbon, Cold-Rolled, Commercial Quality; ASTM A 525–91b, Standard Specification for General Requirements for Steel Sheet, Zinc-Coated (Galvanized) by the Hot-Dip Process; ASTM A 526/A 526M-90, Standard Specification for Steel Sheet, Zinc-Coated (Galvanized) by the Hot-Dip Process, Commercial Quality; ASTM A 569/A 569M-91a, Standard Specification for Steel, Carbon (0.15 Maximum Percent), Hot-Rolled Sheet and Strip Commercial Quality; ASTM A 621/A 621M-92, Standard Specification for Steel, Sheet and Strip, Carbon, Hot-Rolled, Drawing Quality; ASTM B 117–90, Standard Test Method of Salt Spray (Fog) Testing; ASTM B 539–90, Standard Test Methods for Measuring Contact Resistance of Electrical Connections (Static Contacts); ASTM B 633–85, Standard Specification for Electrodeposited Coatings of Zinc on Iron and Steel; ASTM D 523–89, Standard Test Method for Specular Gloss; ASTM D 610–85(1989), Standard Test Method for Evaluating Degree of Rusting on Painted Steel Surfaces; ASTM D 822–89, Standard Practice for Conducting Tests on Paint and Related Coatings and Materials using Filtered Open-Flame Carbon-Arc Light and Water Exposure Apparatus; ASTM D 1535–89, Standard Test Method for Specifying Color by the Munsell System; ASTM D 1654–92, Standard Test Method for Evaluation of Painted or Coated Specimens Subjected to Corrosive Environments; ASTM D 1693–70(1988), Standard Test Method for Environmental Stress-Cracking of Ethylene Plastics; ASTM D 2197–86(1991), Standard Test Method for Adhesion of Organic Coatings by Scrape Adhesion; ASTM D 2247–92, Standard Practice for Testing Water Resistance of Coatings in 100% Relative Humidity; ASTM D 2565–92, Standard Practice for Operating Xenon Arc-Type Light-Exposure Apparatus With and Without Water for Exposure of Plastics; ASTM D 2794–92, Standard Test Method for Resistance of Organic Coatings to the Effects of Rapid Deformation (Impact); ASTM D 3928–89, Standard Test Method for Evaluation of Gloss or Sheen Uniformity; ASTM D 4568–86, Standard Test Methods for Evaluating Compatibility Between Cable Filling and Flooding Compounds and Polyolefin Cable Materials; ASTM G 21–90, Standard Practice for Determining Resistance of Synthetic Polymeric Materials to Fungi; and ASTM G 23–90, Standard Practice for Operating Light-Exposure Apparatus (Carbon-Arc Type) With and Without Water for Exposure of Nonmetallic Materials, referenced in this section are incorporated by reference by reference by REA. These incorporations by references were approved by the Director of the Federal Register in accordance with 5 U.S.C. 552(a) and 7 CFR part 51. Copies of the ASTM standards are available for inspection during normal business hours at REA, room 2845, U.S. Department of Agriculture, Washington, DC 20250–1500 or at the Office of the Federal Register, 800 North Capitol Street, NW., suite 700, Washington, DC. Copies are available from ASTM, 1916 Race Street, Philadelphia, Pennsylvania 19103–1187, telephone number (215) 299–5585. [**Note:** The incorporation by reference and availability of inspection copies are pending approval by the Office of the Federal Register.]

(b) *General information.* (1) Outside plant housings are fabricated of either metallic or nonmetallic materials in different sizes and configurations to suit a variety of applications. The purpose of a housing is to protect its contents from environmental elements, rodents, insects, or vandalism and unauthorized access. Housings are designed with internal brackets for accommodating splicing, bonding and grounding connections, cable terminals, cross-connect facilities, load coils, and optical and electronic equipment.

(2) Pedestals are housings primarily intended to house, organize, and protect cable terminations incorporating terminal blocks, splice connectors and modules, ground lugs and load coils. Activities typically performed in a pedestal are cable splicing, shield bonding and grounding, inductive loading, and connection of subscriber drops.

(3) Serving area interface (SAI) cabinets are housings intended to perform some of the same functions as pedestals but are primarily intended to serve as the connecting terminal

between feeder cable and distribution cables.

(4) Outside plant housings shall be manufactured in accordance with National Electrical Code (NEC) requirements, Underwriters' Laboratories (UL) requirements, Department of Labor, Occupational Safety and Health Administration Standards (OSHA), and all other applicable Federal, State, and local requirements including, but not limited to, statutes, rules, regulations, orders, or ordinances otherwise imposed by law.

(c) *General documentation requirements*—(1) *Installation and maintenance instructions.* (i) Each product shall have available a set of instructions designed to provide sufficient information for the successful installation of the housing, cables, auxiliary equipment, and the associated splice preparation. The instructions shall be of sufficient size to be easily read and shall be printed using waterproof ink. Pedestal instruction sheets shall include a list of miscellaneous replacement parts that may be purchased locally. SAI systems shall be supplied with complete instructions for installation and use.

(ii) When requested by REA, or an REA borrower, the manufacturer shall prepare a training package for the purpose of training technicians in the use and installation of the product and its auxiliary equipment.

(iii) The manufacturer shall provide ordering information for repair parts. Repair parts shall be obtainable through a local distributor or shall be easily obtainable. Information describing equivalent parts and their sources should be provided for those parts that may also be obtained from other sources.

(2) *Quality assurance.* The manufacturer shall demonstrate the existence of an ongoing quality assurance program that includes controls, procedures, and standards used for vendor certification, source inspection, incoming inspection, manufacture, in process testing, calibration and maintenance of tools and test equipment, final product inspection and testing, periodic qualification testing and control of nonconforming materials and products. The manufacturer shall maintain quality assurance records for five years.

(3) *REA acceptance applications.* (i) The tests described in this specification are required for acceptance of product designs and major modifications of accepted designs. All modifications shall be considered major unless otherwise declared by REA. The tests are intended to show the inherent capability of the manufacturer to produce products which have an expected service life of 30 years.

(ii) For initial acceptance the manufacturer shall:

(A) Submit an original signature certification that the product complies with each section of the specification;

(B) Provide qualification test data;

(C) Provide OSHA Material Safety Data Sheets for the product;

(D) Provide a detailed explanation concerning the intended use and capacity of the product;

(E) Provide a complete set of instructions, recommendations for equipment organization and splicing;

(F) Agree to periodic plant inspections;

(G) Provide a certification that the product does or does not comply with the domestic origin manufacturing provisions of the "Buy American" requirements of the Rural Electrification Act of 1938 (7 U.S.C. 901 *et seq.*);

(H) Provide user testimonials concerning field performance of the product;

(I) Provide product samples if requested by REA; and

(J) Provide any other data required by the Chief, Outside Plant Branch (Telephone).

(iii) Each requirement of this section must be addressed in submissions for acceptance. The designation N/A may be entered when the requirements do not apply.

(iv) Acceptance requests should be addressed to:

Chairman, Technical Standards Committee "A" (Telephone), Telecommunications Standards Division, Rural Electrification Administration, Washington, DC 20250–1500.

(d) *Functional design criteria for housings*—(1) *General requirements.* (i) The functional requirements for housings concern materials, finishes, environmental factors, and design features that are applicable to most above ground housings used in the outside plant.

(ii) Housings shall be of sufficient size to permit easily managed installation, operational, testing, and maintenance operations. The general shape of outside plant housings is usually comparable to that of a rectangular column or cylinder, with the shape of any particular housing being left to the manufacturer's discretion. Each design is subject to acceptance by REA.

(2) *Housing types and capacities.* (i) Housings used in outside plant are either the smaller housings generally known as pedestals or larger housings known as equipment or splice cabinets. Both categories may have designs intended for stake mounting, pole mounting, or pad mounting.

(ii) The classifications of pedestals are the general purpose channel Type (H) and the dome Type (M). The Type H pedestal has either front only access or back and front access while the Type M pedestal has top only access. Pedestals are further designated as follows:

Stake Mounted	Type	Pole Mounted	Pole Mounted (Extra High)
BD3	H	BD3A	-
BD4	H	BD4A	-
BD5	H	BD5A	-
BD7	H	BD7A	-
BD14	M	BD14A	BD14AG
BD15	M	BD15A	BD15AG
BD16	M	BD16A	BD16AG

(iii) The minimum volume associated with the pedestal designations shall be as shown in the following table:

Pedestal Housing Designation(1)	Minimum Volume	
	Cubic Centimeters	(Cubic Inches)
	cm^3	($in.^3$)
BD3, BD3A(2)	9,000	(550)
BD4, BD4A(2)	15,000	(900)
BD5, BD5A(2)	35,000	(2,100)
BD7(2)	72,000	(4,400)
BD14, BD14A, BD14AG(3).	9,000	(550)
BD15, BD15A, BD15AG(3).	27,000	(1,600)
BD16, BD16A, BD16AG(3).	38,000	(2,300)

Note (1): Housings designed for unique purposes will be evaluated on a case-by-case basis.

Note (2): For Type H pedestals, the minimum volume is that space as measured 5 centimeters (cm) (2 inches (in.)) below the top of the housing to a point 40 cm (16 in.) above the bottom of the lower cover plate.

Note (3): The minimum volume of the Type M pedestals shall be the space within the dome measured from the lower edge of the dome to a point 5 cm (2 in.) from the top.

(iv) Equipment cabinets intended for use as serving area interface housings shall be assigned size designations according to their maximum pair termination capacities. The capacity will vary depending on the type of terminating equipment used. Serving area interface cabinets shall be suffix designated with an "A" for pole mounting, "X" for pad mounting, and "S" for stake mounting.

(v) Large pair count splice cabinets are classified according to their splice capacity. Approximately 48 cm^3 (3.0 $in.^3$) of splice area per pair straight spliced shall be permitted.

(vi) The minimum volume associated with large pair count splice cabinets shall be as shown in the following table:

Splice Cabinet Designation(1)	Minimum Volume (cm.3) (in.3)	Maximum Splice Capacity (Pairs)
BD6000	295,000 (18,000).	6,000
BD8000	393,000 (24,000).	8,000
BD10000	491,000 (30,000).	10,000

Note (1): Additional sizes of splice cabinets shall be considered by REA on a case-by-case basis.

(3) *Design and fabrication requirements for housings.* (i) Type H pedestal housings may consist of an enclosed channel incorporating an integrally mounted stake that serves as a backplate, or they may be designed for universal mounting on stakes or poles. The body of the housing shall have two major components; an upper cover and a base cover. The upper cover shall have a top, front and back plate with the front cover removable to permit entry and provide increased work space. The base cover shall consist of a front plate and back plate. The base cover back plate may be an extension of the upper back plate cover.

(ii) Type M pedestal housings shall consist of a one piece upper sleeve designed to fit over the base cover trapping air to prohibit water from entering the splice area when installed in locations prone to temporary flooding. Pedestals designed to be mounted extra high on poles for locations susceptible to deep snow shall have a bottom close-off option available to prohibit the ingress of birds, rodents and insects.

(iii) The external housing components on all outside plant housings shall provide reasonable protection against accidental removal or vandalism. Housings shall be equipped with a cover plate retaining bolt and cup washer that may be opened only with an industry accepted socket type can wrench. Housings may be equipped with provisions to allow the purchaser to install a padlock.

(iv) Installed housings shall resist the disassembling force of frost heaving applied to the bottom of ground line cover plates. The base cover must remain stationary to stabilize the contents of the housing cavity.

(v) In an effort to provide protection against dust penetration, blowing snow, rain, and ultraviolet light degradation of internal components, all mechanical gaps shall be restricted. The use of seals, overlaps, gaskets, and dovetailing is required to assure satisfactory protection of housed equipment.

(vi) Knockouts, cutouts, or notches designed to accommodate aerial service drops shall not be permitted. A design option for housings intended to accommodate service drops shall include a separate channel or equivalent in the base cover to allow future additions of service drops without the removal of gravel or the moisture barrier in the base of the housing. Service wire channels must be designed to prevent the entry of birds, reptiles, rodents and insects.

(vii) Minimal venting of housings may be necessary to relieve internal pressure and condensation.

(viii) There shall be no aluminum housing components that will become buried in the soil when the housing is properly installed.

(ix) Housing components may be assembled using rivets, welds, glue, bolts and nuts, or other techniques suitable for the materials involved.

(x) Housings and their components that require field assembly must be capable of being assembled with tools normally available to outside plant technicians.

(xi) Hinged doors on SAI housings and large pair count splice housings shall be equipped with a device that restrains the doors in the open position.

(xii) Outside plant housings shall be free of sharp edges, burrs, etc., that could present a safety hazard to personnel involved in installation and use of the product or to the general public. Surfaces inside housings must not allow pinching of conductors during installation of cover plates or the opening and closing of doors.

(xiii) A ground line mark shall be provided, approximately 15 cm (6 in.) below the top edge of the housing base cover plate on housings intended for ground level mounting. Base cover plates shall have be a minimum height of 31 cm (12 in.).

(xiv) Any housing, which weighs in excess of 91 kilograms (kg) (200 pounds (lb)), including its contents, shall be equipped with lifting brackets for attaching hoisting cables or chains.

(xv) Housing stakes shall be a minimum of 107 cm (42 in.) in length. If fabricated from steel, they shall have a minimum thickness of No. 13 gauge as measured according to American Society for Testing and Materials (ASTM) A 525–91b. Stakes shall be formed into a "U" channel with a minimum depth of 2 cm (0.75 in.). The stake shall be a single part of suitable design strength for driving 91 cm (36 in.) into the soil with hand tools without damage such as bending or warping. The stake shall have adequate mounting holes having a minimum separation of 15 cm (6 in.) for mounting the housing baseplate. The stake material must resist corrosion and deterioration when exposed to soil and atmospheric conditions.

(xvi) The housing design must permit a logical progression of installation steps that would normally be encountered in typical field installations.

(xvii) Provisions for attaching housings to stakes, poles, walls, other housings, or pads shall be provided for each design intended for those purposes. Locations of holes for mounting attachments may be provided by knockouts on above ground components. Mounting hole locations for below ground components may be predrilled.

(xviii) Pole mounting hardware shall provide at least 1.3 cm (0.5 in.) clearance from the pole to the housing. Pole mounting brackets shall accommodate the wide range of pole sizes used in the telephone industry.

(xix) Pad mounted housings shall have hardware available for anchoring the housing base to the pad. A template may be provided to assist in the location of mounting attachment details for pad preparation.

(xx) Housings equipped with stub cables shall have strain relief devices to permit shipping and handling of the housing without damage to the housing or stub cables. Only REA accepted cable shall be used for stub cables. The cable manufacturer's recommendations concerning minimum bend radius shall be observed. The minimum bend radius for most copper cables is 10 times the cable diameter.

(xxi) Cable supports shall be provided near the top of the ground line cover and other appropriate locations within the housing to provide cable stability consistent with the intended use and capacity of the housing. Cable supports shall be capable of holding a minimum load of 23 kg (50 lb).

(xxii) An adequate supply of nonmetallic retainer clips or tie wraps capable of supporting a minimum load of 23 kg (50 lb) shall be provided with the housing. Adequate spaces for installation of the clips or tie wraps must be provided on the housing backplate and cable supports.

(xxiii) Housing chambers designed for splicing operations shall be equipped with insulated supporting straps or rods suitable for supporting splice bundles. The insulation on the straps or rods shall extend for the entire length of the device and shall have a dielectric strength of 15 kilovolts (kv) direct

current (dc) minimum. Housings having an "H" frame design where both front and rear covers may be removed may incorporate insulated tie bars to be used as cable supports.

(xxiv) Housings designed to contain equipment in addition to splices shall be equipped with a device for physically separating the splice area from the service area of the housing.

(xxv) A dielectric shield rated at 15 kv dc shall be provided to enclose the cable splice area. The shield shall extend from the lower cable supports to within 2.5 cm (1 in.) of the top of the housing. The shield shall be equipped with Velcro or equivalent fastening devices designed to hold the shield in both the open or closed positions. The fastening devices shall extend along the entire vertical edge of the dielectric shield.

(xxvi) Mounting arrangements for a variety of terminal blocks and other equipment shall be provided by means of good housekeeping panels or other devices that may enhance the service aspect of the housing.

(xxvii) Housings designed for serving area interface cabinets may be shipped with terminal blocks installed and stub cables attached. If this option is exercised, the stub cables and terminal blocks must be REA accepted. In all cases, SAI cabinets must be equipped with appropriate mounting devices for installing the peripheral equipment required for a serving area interface.

(xxviii) Serving area interface cabinets shall be designed to provide physical separation between the splicing area and the area provided for running cross-connect jumpers.

(xxix) Serving area interface cabinets and large splice housings must have an external feature for attaching a padlock to prevent unauthorized entry.

(xxx) Each housing shall have a tinned or zinc electroplated copper alloy or equivalent connector plate or bar to be used for terminating ground and cable shield bond connections. The device shall be equipped with captive studs and nuts with captive lock washers designed for attaching 6 American Wire Gauge (AWG) copper bonding harness wire or braid and a 6 AWG copper ground wire. Connector plates shall be equipped with enough studs and nuts to provide individual connections equivalent to the maximum number of cable sheaths recommended for the housing. Housings shall incorporate design features that enable the field installation of at least one additional connector plate for service conditions that require numerous connections. A bonding and grounding system capable of providing support and strain relief for service wires shall be provided for housings intended for use as distribution points. The bonding system shall be designed to provide sheath continuity as cable and service wires are installed, and prior to any other operation being performed. The bonding arrangement shall provide electrical continuity between all bonds and the ground connector plate. The bonding and grounding arrangement shall permit the lifting of individual cable ground connections for testing and cable locating activities without jeopardizing the grounding potential of other cables that may enter the housing. The bonding and grounding system shall be capable of conducting a current of 1000 amperes for at least 20 seconds.

(4) *Warning sign.* (i) A buried cable warning sign shall be securely attached to the outside of each housing. The lettering information on the sign shall be permanent.

(ii) For pedestals, the sign shall be centered horizontally on the front cover and the top of the sign shall be not more than 10 cm (4 in.) from the top of the housing.

(iii) For serving area interface cabinets, the sign shall be centered horizontally and vertically on the door. If there are two doors, the sign shall be mounted on the left door.

(iv) Deviations from warning sign location requirements are permitted only for housing design constraints. Alternate sign locations will be considered by REA.

(v) The REA standard sign design is shown in Figure 1.

FIGURE 1

WARNING SIGN

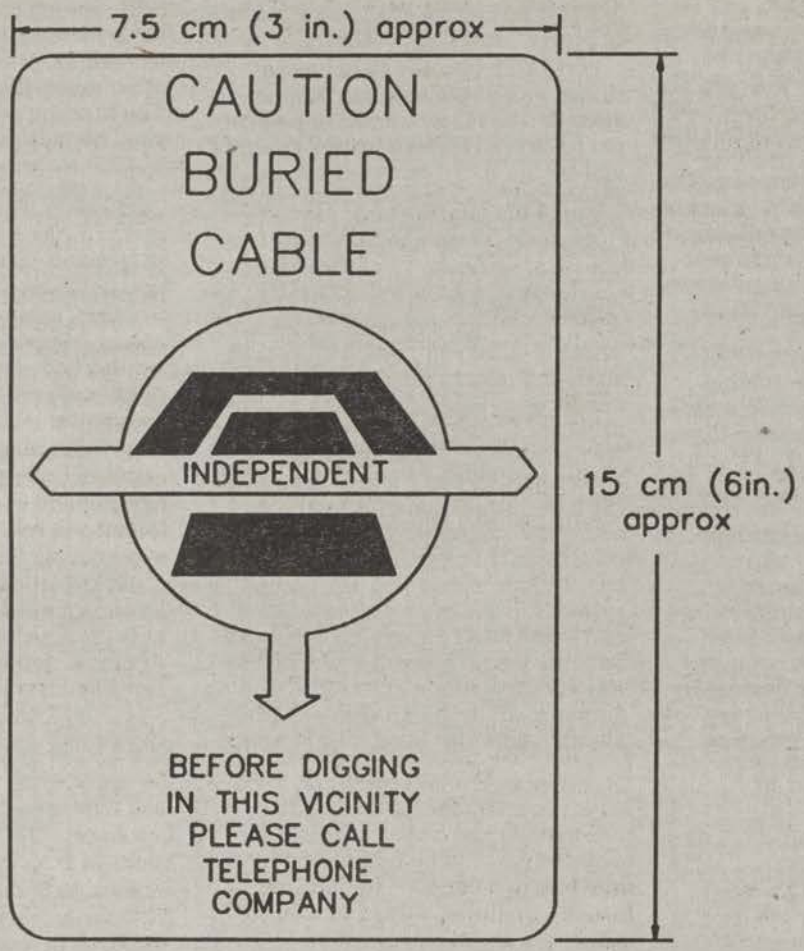

(5) *Housing materials.* (i) Materials used in housings shall present no environmental or safety hazard as defined by industry standards or Federal, State, or local laws and regulations.

(ii) All materials are required to have fire resistance ratings consistent with recognized industry standards. External materials must be flame resistant.

(iii) All materials used in the manufacture of housings or component parts must achieve the required strength properties, resist deterioration when exposed to outdoor conditions, and be acceptable to REA for the specific application. New materials or materials not familiar to the REA staff shall be supported by test and performance data which demonstrates their suitability for the intended use.

(iv) Nonmetallic housing materials shall have a fungus growth rating no greater than one according to ASTM G 21–90.

(v) Metallic components shall be either corrosion resistant or protected against corrosion and must not produce galvanic corrosion in wet or humid conditions on other metals that may be present in the housing environment.

(vi) Mill galvanized steel used in the manufacture of housings shall comply with the appropriate requirements of one of the following standards:

(A) ASTM A 109–91;
(B) ASTM A 366/A 366M–91;
(C) ASTM A 525–91b; or
(D) ASTM A 526/A 526M-90.

(vii) Hot rolled steel shall comply with the appropriate requirements of one of the following standards:

(A) ASTM A 569/A 569M-91a; or
(B) ASTM A 621/A 621M-91.

(viii) Cold rolled steel shall comply with the appropriate requirements of one of the following standards:

(A) ASTM A 109–91; or
(B) ASTM A 366/A 366M-91.

(ix) Steel parts used for internal housing brackets shall be hexavalent chromate coated or zinc plated in accordance with ASTM B 633–85.

(x) Hardware items used for assembling or fastening housing components shall be 300 series or passivated 400 series stainless steel or hot dip galvanized in accordance with ASTM A 153–82 (1987). Other materials will be considered by REA on an individual basis.

(xi) Aluminum components shall be fabricated from alloy types 5052 or 6061 or other types that have been recognized as having acceptable corrosion resistance and formability and weldability features.

(xii) Nonmetallic parts must be resistant to solvents and stress cracking and shall be compatible with metals and other materials such as conductor insulations and filling compounds used in the manufacture of cable. Plastic materials must be noncorrosive to metals and resist deterioration when exposed to industrial chemical pollutants, ultra-violet rays, road salts, cleaning agents, insecticides, fertilizers, or other detrimental elements normally encountered in the outdoor environment.

(xiii) Housing door seals and gaskets may be manufactured from rubber or synthetic rubber-like elastomer materials. Seals and gaskets shall exhibit a high degree of weatherability with an effective life of at least 30 years in the outdoor environment. The material shall be tear resistant and have a low compression set.

(6) *Housing finish requirements.* (i) All interior and exterior surfaces of housings shall be free from blisters, wrinkles, cracks, scratches, dents, heat marks, and other defects.

(ii) There shall be inherent design provisions to prevent objectionable deterioration of the housing such as rusting, exposure of fiber or delamination. Secondary protection, such as galvanizing over steel per ASTM A 526/A 526M-90 or anodizing over aluminum, shall be provided to ensure reliability over the projected 30 year design life of the housing.

(iii) Painted metal housings shall have a minimum gloss of 60 (60° specular) in accordance with ASTM D 523–89.

(iv) All painted surfaces shall have a uniform color and texture in accordance with ASTM D 3928–89. Nonmetallic housings shall meet recognized industry standards concerning optical appearance for gloss and haze as applicable for the material.

(v) The colors of housings that REA will consider for acceptance shall be as follows:

COLOR	STANDARD
Gray-Green	Munsell 6.5GY 6.03/1.6
Green	Munsell 8.8 G2.65/5.3
Orange	Federal Standard 595A Color Number 12246
	Munsell 0.15YR 5.26/13.15
Chocolate	Munsell 5.27YR 2.40/2.60 Color Number 835

(7) *Installation requirements.* (i) The design of the housing must provide for a logical and normal installation sequence, i.e., excavation, installation of a foundation or base and anchoring devices, addition of hardware, installation and bonding of cables, splicing, addition of service, and final closing.

(ii) No special tools or equipment other than that usually carried by outside plant technicians and construction crews must be required for installation of the housing. Security devices are the exception to this requirement.

(iii) Installation hardware shall maintain housings in an erect and stable position when subjected to normal storm loads. Pad mounted designs must accommodate precast or cast-in-place reinforced concrete or other suitable prefabricated material. Brackets, inserts for fastening, conduit openings, or other items necessary for a pad mounted installation must be provided. The manufacturer shall provide detailed drawings or a template for locating inserts, conduit openings, or slots for cast-in-place pad construction.

(e) *Performance criteria and test procedures for housings*—(1) *General information.* (i) The housing manufacturer shall perform adequate inspections and tests to demonstrate that housings and housing components comply with REA requirements.

(ii) Testing shall be performed at a room temperature of 24 ± 3°C (75 ± 5°F). Temperatures for testing performed at other than room temperature shall be determined as near the center of the product under test as practical.

(2) *Description of test housing.* (i) Each distinctly designed and configured family of housings intended to perform a particular function shall be tested.

(ii) The typical test sample shall consist of the exterior housing components such as covers, backplates, good housekeeping panels, cap assembly, anchor posts, decals, etc. Interior components must include the bonding and grounding hardware for cables and service wires and the dielectric shield. The housing may include terminal blocks or cross-connect modules, cable splices, or the typical outside plant equipment the housing is designed to contain and protect.

(3) *Environmental requirement for housings*—(i) *Thermal shock.* The test housing shall be placed in a test chamber and exposed to the temperature cycle of Figure 2 for five complete cycles. The step function nature of the temperature changes may be achieved by insertion and removal of the test housing from the chamber. The soak time at each temperature shall be four hours. The housing shall be removed from the test chamber at the conclusion of the five-cycle period. After the test housing temperature has stabilized to room temperature, the housing must be inspected for deterioration of materials and satisfactory operation of mechanical functions.

FIGURE 2
THERMAL SHOCK TEMPERATURE CYCLE

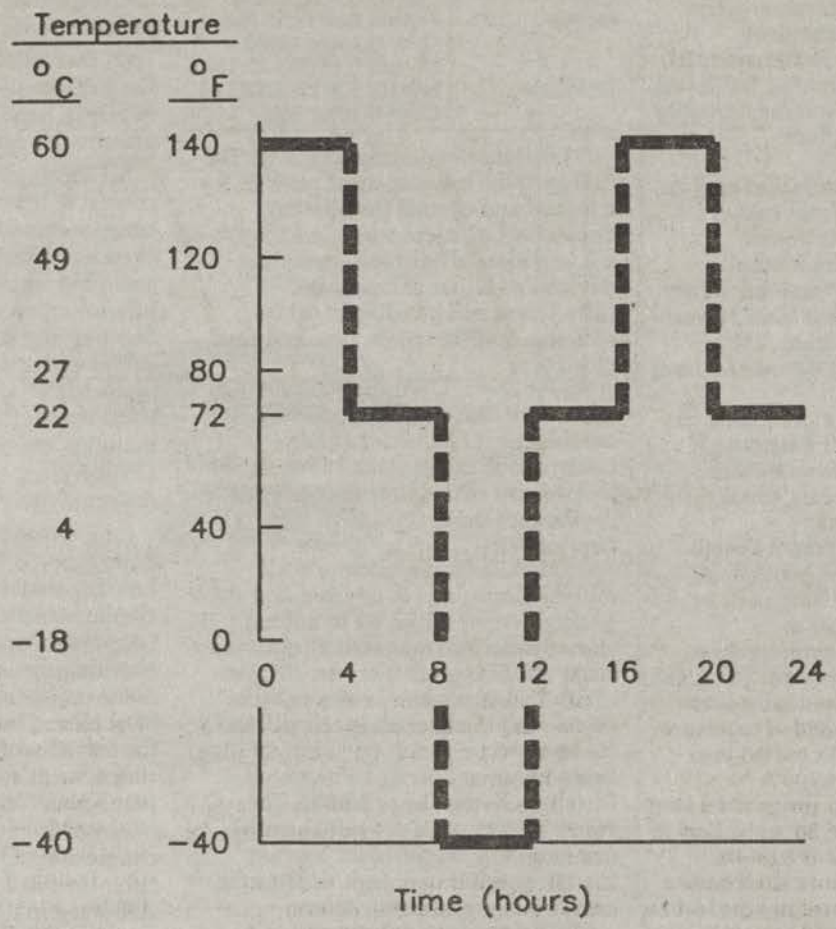

(ii) *Thermal shock and humidity.* The test housing shall be placed in an environmental test chamber at 95 ± 3 percent (%) relative humidity (RH) and temperature cycled per Figure 3 for a period of 30 days. At the end of the test there shall be no rust or corrosion of any closure components. Minor corrosion due to surface scratches, nicks, etc. is permitted. If the closure is made of a nonmetallic material, there shall be no signs of degradation.

FIGURE 3

ENVIRONMENTAL TEST CHAMBER TEMPERATURE CYCLE

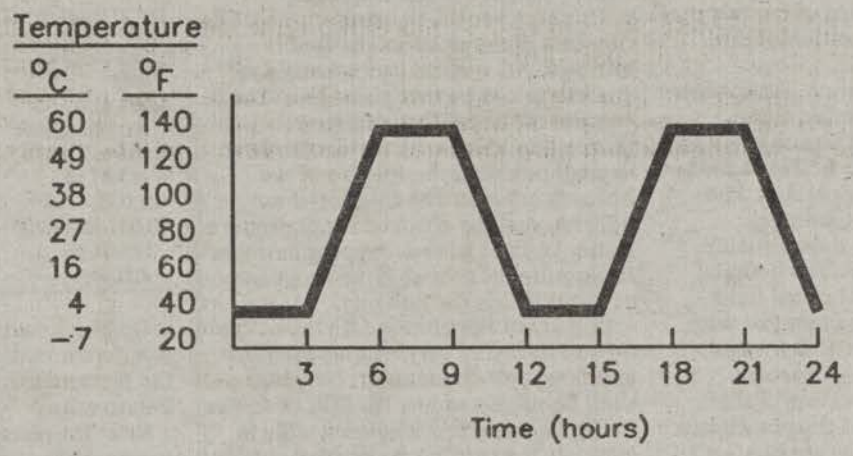

Note: Relative Humidity = 95% ± 3%

(iii) *Humidity and condensation.* Test panels shall be placed in an environmental chamber and subjected to 1,008 hours (42 cycles) of exposure per ASTM D 2247–92. One cycle consists of 24 hours of 100% humidity (with condensation on the panels) at a cabinet temperature of 38 ± 1°C (100 ± 2°F) and an ambient temperature of 25 ± 1°C (77 ± 2°F) without heat input. Upon completion of cycling, the test panels shall be subjected to an 11 newton-meter (N-m) (100 pound-inches (lb-in.)) impact test using the Gardner-Impact Tester or equivalent. Test panels shall show no substrate or coating cracking or loss of coating adhesion on either side.

(iv) *Weatherability.* Three test panels shall be tested for weatherability in accordance with the appropriate procedures of either ASTM D 822–89 or ASTM G 23–90. Total exposure time shall be a minimum of 800 hours. Failure is defined as fading, cracking, blistering, or delamination on any of the three test panels.

(v) *Low temperature durability.* Low temperature durability shall be proven by exposing the three test panels from paragraph (e)(3)(iv) of this section to at least 25 continuous cycles of the following test sequence:

(A) To insure complete saturation of the three test panels, soak them for 96 hours in a container of distilled water 22 ± 2°C (71.6 ± 4°F);

(B) Lower the temperature of the water and the immersed test panels to −28 ± 2°C (−18.4 ± 4°F) and stabilize for 24 hours;

(C) Thaw the water with the samples to 22 ± 2°C (71.6 ± 4°F) and stabilize for 24 hours;

(D) Repeat the procedure 24 times. Any cracking, crazing, deforming, or delaminating on any of the three test panels shall be considered a failure; and

(E) Remove the samples from the water and impact test the three panels by delivering a force of 11.3 N-m (100 lb-in.) using a Gardner-Impact Tester to each specimen at 71, 22, and −28 ± 2°C (159.8, 71.6, and −18.4 ± 4°F), after stabilizing them at those temperatures for at least two hours. Visual inspection shall reveal no deformation or perforations on any of the test panels.

(vi) *Corrosion resistance.* Corrosivity shall be tested in accordance with the requirements of ASTM B 117–90. Both scribed and unscribed panels shall be evaluated following the procedures of ASTM D 1654–92. Scribed panels shall have a rating of at least six, following 500 hours of exposure to salt fog, and the unscribed panels shall have a rating no lower than 10, after 1,000 hours exposure. Visual rust inspection shall confirm no more than 0.03% rusting (rust grade 9) of the surface area of the test sample when evaluated in accordance with ASTM D 610–85(1989). The unscribed samples shall be impacted with an 11.3 N-m (100 lb-in.) force, using a Gardner-Impact Tester or equivalent. Visual inspection of the impacted samples shall reveal no loss of adhesion between the base material and the coating or cracking at the finish on the test panels.

(vii) *Fungi resistance.* Fungi resistance of nonmetallic housing materials shall be tested according to the procedures of ASTM G 21–90. Any rating greater than one shall be considered a failure.

(viii) *Stress crack resistance.* The stress cracking characteristics of nonmetallic housing components shall be tested in accordance with ASTM D 1693–70(1988). The tests shall be performed at 49 ± 2°C (120 ± 4°F) for 14 days and exposed to the following materials:

(A) Industry recognized filling compounds;

(B) Isopar M;

(C) Industry recognized solvents;

(D) Industry recognized encapsulants; and

(E) Commonly used insect, pest, and weed control products and agricultural fertilizers.

(ix) *Chemical resistance.* (A) Chemical resistance shall be determined by

immersing representative nonmetallic material samples in each of the following solutions for 72 hours at 22 ± 2°C (71.6 ± 4°F):

(*1*) 3% sulfuric acid;

(*2*) 100 parts per million (ppm) trichloroethane in water;

(*3*) 0.2 N sodium hydroxide; and

(*4*) Unleaded high octane gasoline.

(B) There shall be no swelling, deformation, or softening of the material samples or any discoloration of the solution.

(x) *Ultraviolet resistance.* Test panels of metallic and nonmetallic outer housing materials shall be subjected to 700 hours exposure per ASTM D 2565–92 using the type BH apparatus. The panels shall not exhibit fading, blistering, checking, or delamination.

(xi) *Weathertightness.* The housing shall be mounted in its typical field installation position and sprayed with water. The temperature of the water shall be adjusted to be equal to or warmer than the temperature of the cabinet interior to avoid the possibility of condensation. A water spray head shall be used to direct water at the housing so that the water stream will strike the assembly at a downward angle of 45 degrees. The flow of the water shall be 3.8 liters per minute (one gallon per minute), with 276 kilopascals (40 pounds per square inch) head of pressure. The spray head shall be held 1.8 meters (m) (6 feet (ft)) from the test cabinet. The spray head shall be adjusted so that water impinges uniformly over the housing surface. The duration of the test shall be five minutes. All vertical cabinet surfaces shall be tested by this procedure. The exterior of the cabinet shall be thoroughly dried with towels (no heat drying) prior to examination of the housing interior. The interior of the housing shall be checked for presence of water. Wetting of over-lapping surfaces is permitted. There shall be no presence of water inside the housing.

(xii) *Wind Resistance.* (A)(*1*) Stub pole or wall mounted serving area interface and large pair count splice housings shall be subjected to a load (F) as shown in Figure 4 and the following table to simulate the turning moment equivalent to a uniform wind load of 161 kilometers per hour (km/h) (100 miles per hour (mi/h)) perpendicular to the largest surface area.

Maximum Area of Largest Surface	Load	
Square Centimeters (Square Inches)	kg	(lb)
cm² (in.²)		
5,200 (800) or less	18	(40)
5,201 to 9,100 (801 to 1,400)	32	(70)
9,101 to 13,000 (1,401 to 2,000)	45	(100)
13,001 to 16,200 (2,001 to 2,500)	57	(125)

(*2*) The housing shall remain in its original mounting position throughout the test and exhibit no mechanical deformation.

Note: The procedures for housings with larger surface area will be evaluated by REA on a case-by-case basis.

FIGURE 4

TURNING MOMENT – POLE MOUNTED HOUSINGS

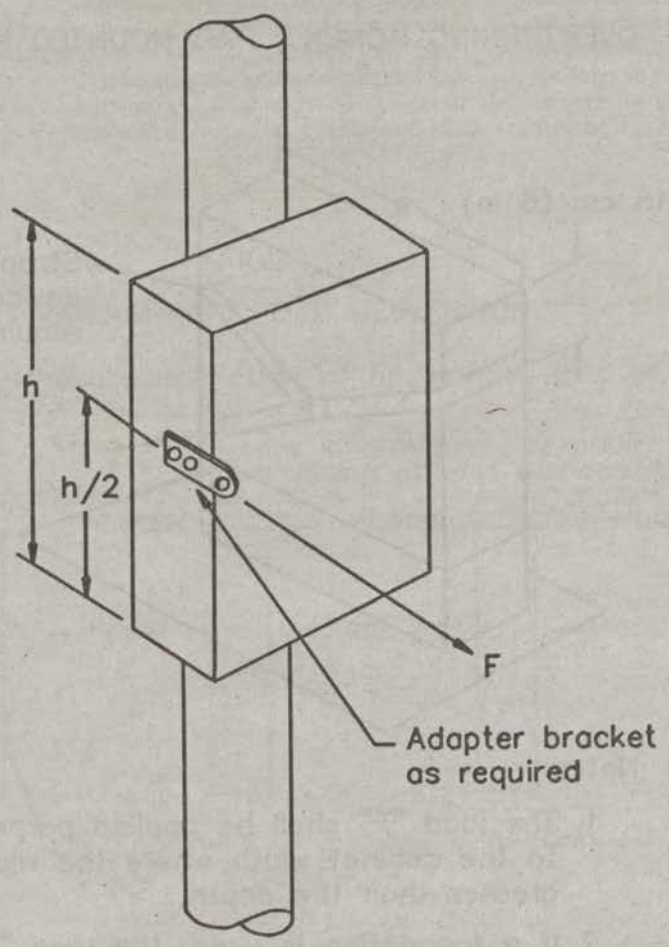

(B)(*1*) Pad or ground mounted SAI or splice housings shall be subjected to a load (F) as shown in Figure 5 and the following table to simulate the overturning moment equivalent to a uniform wind load of 161 km/h (100 mi/h) perpendicular to the largest surface area.

Height	Maximum Area of Largest Surface	Load	
cm (in.)	cm² (in.²)	kg	(lb)
122 (48) or less	11,000 (1,700) or less	91	(200)
	11,001–13,000 (1,701–2,000)	104	(230)
	13,001–14,900 (2,001–2,300)	118	(260)
123–152 (49–60)	11,700 (1,800) or less	91	(200)
	11,701–14,300 (1,801–2,200)	109	(240)
	14,301–16,200 (2,201–2,500)	127	(280)
	16,201–18,800 (2,501–2,900)	145	(320)
	18,801–20,800 (2,901–3,200)	163	(360)
	20,801–23,400 (3,201–3,600)	181	(400)
153–183 (61–72)	14,300 (2,200) or less	109	(240)
	14,301–16,900 (2,201–2,600)	127	(280)
	16,901–19,500 (2,601–3,000)	150	(330)
	19,501–22,700 (3,001–3,500)	172	(380)
	22,701–25,300 (3,501–3,900)	190	(420)
	25,301–27,900 (3,901–4,300)	213	(470)

(2) The housing shall remain in its original mounting position throughout the test and exhibit no mechanical deformation.

Note: The procedures for housings with larger surface areas will be evaluated by REA on a case-by-case basis.

FIGURE 5

OVERTURNING MOMENT, PAD MOUNTED HOUSINGS

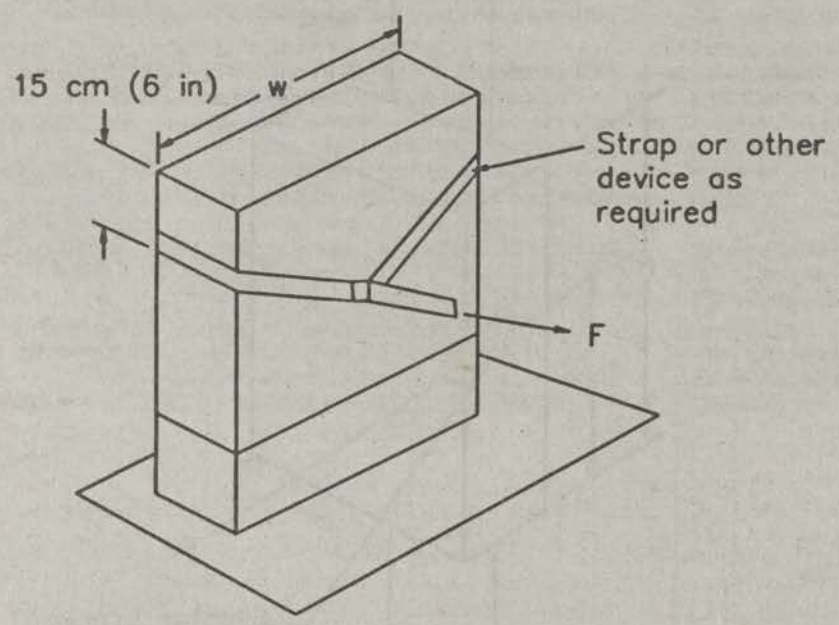

Notes:

1. The load "F" shall be applied perpendicular to the cabinet width where the width is greater than the depth.
2. If a foundation is used, the load "F" shall be applied toward the edge nearest to the cabinet.

(xiii) *Fire resistance.* (A) The test housing shall be installed in a manner typical of field installation. U.S. No. 1 wheat straw shall be placed on the ground around the housing base in an one meter (3 ft) radius at an approximate depth of 10 cm (4 in.). The straw shall be ignited and permitted to burn fully. After the housing has cooled, its contents shall be inspected for evidence of ignition, melting, burning, or structural damage. Damage sufficient to impair service constitutes failure.

(B) Polymeric materials shall be tested in accordance with the Underwriters Laboratories Publication (UL) 94, dated June 18, 1991. Materials used in housing components shall have a rating of 94V-0 or 94V-1 and shall not sustain combustion when an open flame source is removed.

(4) *Mechanical requirements for housings*—(i) *Impact resistance.* The test housing shall be subjected to the following impacts according to its minimum volume or minimum width and depth as shown in the following table:

Minimum Volume	Minimum Width or Depth	Impact Force
cm^3 ($in.^3$)	cm (in.)	N-m (lb-ft)
Less than 35,000 (2,100)	Less than 13 (5).	68 (50)
35,000 (2,100) or Greater	13 (5) or Greater.	136 (100)

(A) The impact force shall be delivered to the front, back, and top surfaces. Circular housings shall be impacted on side surfaces 180° apart and on the top. The device used to deliver the force shall be spherical and approximately 25 to 31 cm (10 to 12 in.) in diameter. A typical test procedure may include the use of a hard rubber bowling ball, weighing 6 to 7 kg (13 to 16 lb), enclosed in a mesh bag, attached to a rope with a metal ring. The load shall be dropped vertically on the top surface and applied to the sides with a pendulum motion using the appropriate height and extension arm to achieve the required impact force. The housing must be impacted at the approximate mid-point of the surface area.

(B) Housings shall be conditioned for a minimum of eight hours at −40°C (−40°F) in an environmental chamber prior to testing. If the chamber is insufficient in size to conduct tests within the chamber, the housing may be removed and shall be tested within 10 minutes after removal.

(C) After impact testing, the housing shall not exhibit fractured or ruptured surfaces sufficient to allow the ingress of moisture or dust. The housing shall not exhibit mechanical damage that would impair the functioning of hinges, latches, locks, etc.

(ii) *Load deflection.* Free standing buried plant housings shall be tested for load deflection in accordance with Figure 6. The assembled housing shall be rigidly held in place by a mechanical means to simulate a normal field installation. A length of wire or cable, or other suitable material, shall be placed around the top section of the housing and deadended. The wire or cable shall be initially tensioned to 23 kg (50 lb). A measurement shall then be taken of the deflection of the housing at the top as shown in Figure 6. The deflection shall be recorded at incremental loads of 23 kg (50 lb) until destruction of the housing occurs. The average load for the three directions shall not be less than 136 kg (300 lb) and the minimum load in any direction shall be 113 kg (250 lb). Failure is defined as housing component fracture or crazing of the housing's surface finish.

FIGURE 6

MEASURING LOAD DEFLECTION

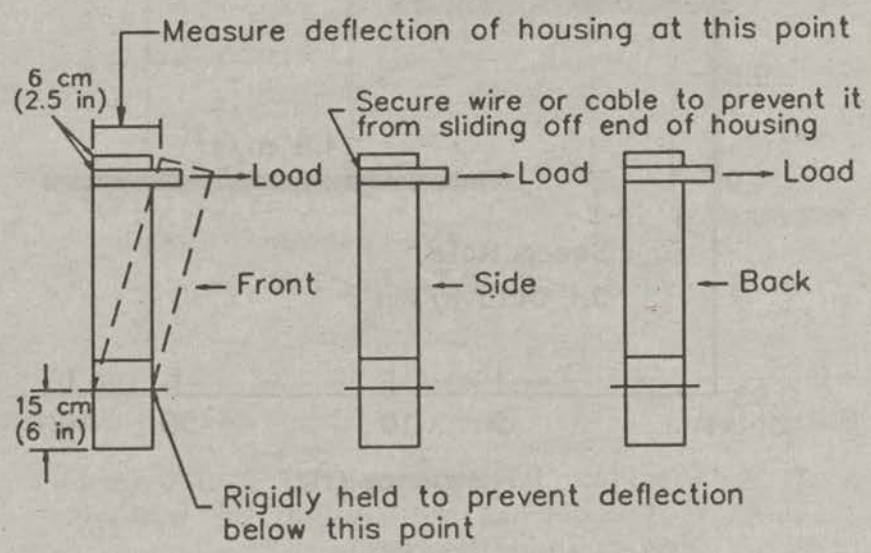

Notes:

1. One pedestal-mounted housing of each BD classification shall be tested to failure in each of the directions shown above.
2. A total of three pedestal-mounted housings of each BD classification shall be subjected to the required loads in each direction.
3. The average load for the three directions shall not be less than 136 kilograms (300 pounds). The minimum load shall be 113 kilograms (250 pounds).
4. Pole mounted housings shall be subjected to the same loading criteria.

(iii) *Vibration requirements.* The test housing and its contents shall be subjected to acceleration at a sine wave frequency sweep rate as shown in Figure 7 for a housing packaged for shipment and Figure 8 for an unpackaged housing. The frequency sweep may be performed continually or sequentially. The test shall be conducted once along each of three mutually perpendicular axes of the housing. There shall be no mechanical or electrical degradation of the housing or its contents. Noticeable damage to the housing constitutes failure.

FIGURE 7

VIBRATION TEST FOR PACKAGED HOUSINGS

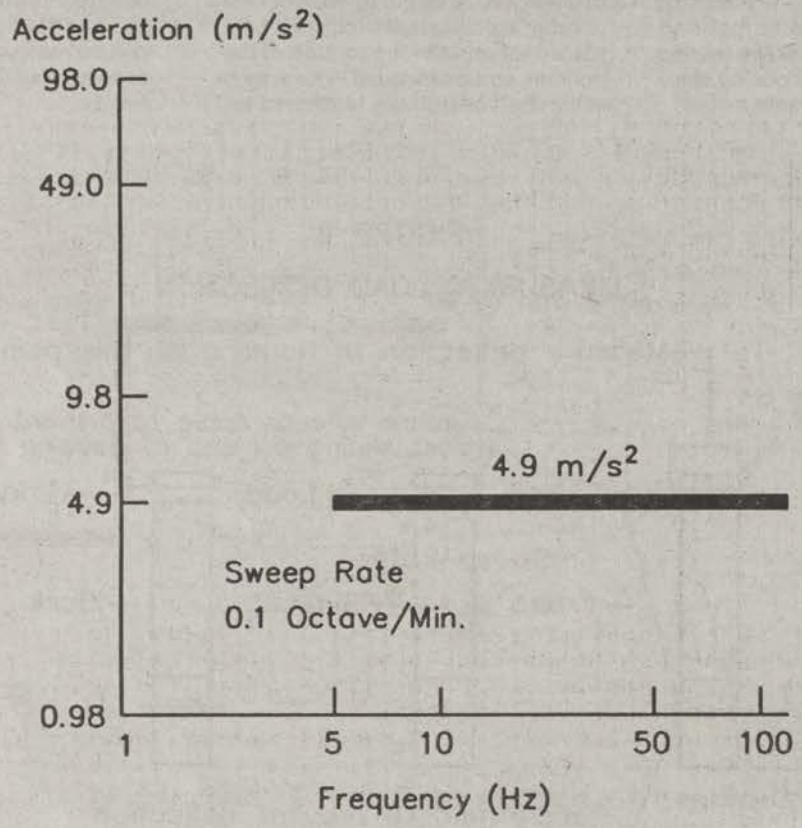

FIGURE 8

VIBRATION TEST FOR UNPACKAGED HOUSINGS

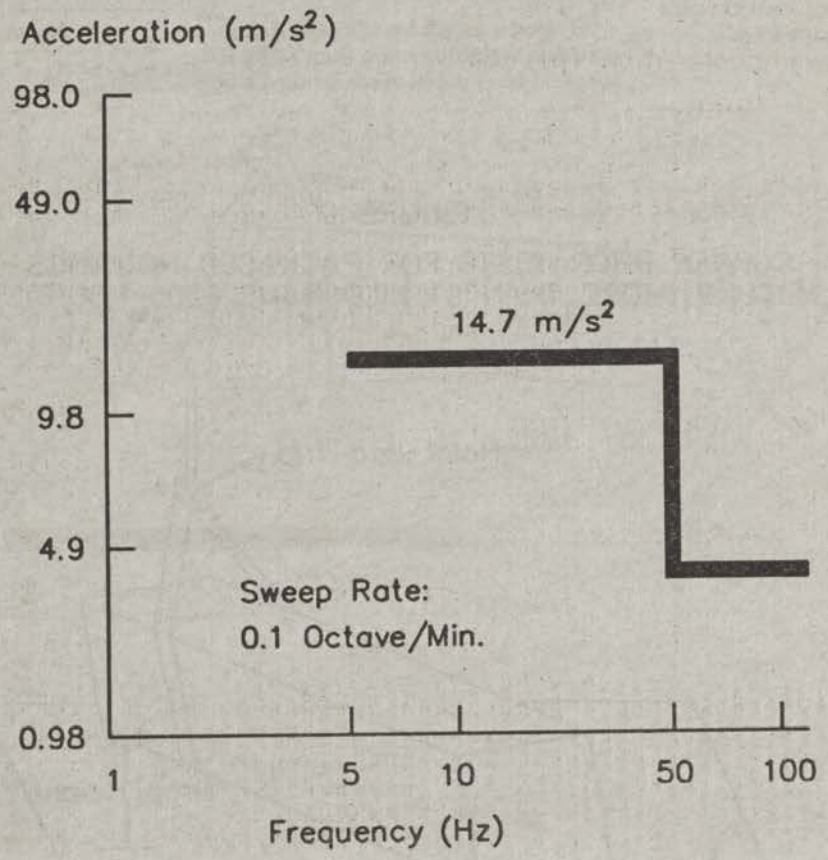

(iv) *Drop test requirements.* Housings shall be subjected to appropriate drop tests according to their weight. The drop tests shall be performed on housings and their contents as normally packaged as well as on unpackaged housings. The tests shall be conducted on a smooth level concrete floor or similar unyielding surface. For corner drops, the packaged housing and its contents shall be oriented at impact such that a straight line drawn through the struck corner and package geometric center is approximately perpendicular to the impact surface.

(A) Packaged housings and their contents weighing 91 kg (200 lb) or less shall be capable of enduring a single drop on each face or corner without damage from a height specified as follows:

Packaged Housing Including Contents Weight	Drop Height
kg (lb)	cm (in.)
0 to 9 (0 to 20)	76 (30)
10 to 23 (21 to 50)	61 (24)
24 to 45 (51 to 100)	53 (21)
46 to 91 (101 to 200)	46 (18)

(B) Packaged housings and their contents weighing more than 91 kg (200 lb) shall be capable of enduring a single drop on each of two diagonally opposite corners of the package without significant damage from a height specified as follows:

Packaged Housing Including Contents Weight	Drop Height
kg (lb)	cm (in.)
92 to 453 (201 to 1000)	30 (12)
Over to 453 (1000)	15 (6)

(*1*) The packaged housing and contents shall be placed on its normal shipping base with one corner supported 15 cm (6 in.) above the floor and the other corner of the same end supported 30 cm (12 in.) above the floor as shown in Figure 9. The unsupported end of the package shall be raised so that the lowest corner reaches the height listed above and then allowed to fall freely.

(*2*) The procedure of paragraph (e)(4)(iv)(B)(*1*) of this section shall be repeated for the diagonally opposite corner.

(*3*) The packaged housing and contents shall be capable of enduring a single drop on each edge of the base of its normal shipping position from the required height without damage and shall remain operational without function impairment. The packaged housing and contents shall be placed on its base with one edge supported on a sill 15 cm (6 in.) high and the unsupported edge raised to the required height as shown in Figure 10 and allowed to fall freely.

(*4*) The procedure of paragraph (e)(4)(iv)(B)(*3*) of this section shall be repeated for all edges of the base.

(C) Unpackaged housings and their contents weighing 23 kg (50 lb) or less shall be capable of enduring a single drop on each face and adjacent corners without significant damage from a height specified as follows:

Packaged Housing Including Contents Weight	Drop Height
kg (lb)	cm (in.)
0 to 9 (0 to 20)	10 (4)
10 to 23 (21 to 50)	8 (3)

(D) Unpackaged housings and their contents weighing more than 23 kg (50 lb) shall be capable of enduring a single drop without significant damage when lifted by its normal hoisting supports as shown in Figure 11 and with its lowest point at a height specified as follows:

Packaged Housing Including Contents Weight	Drop Height
kg (lb)	cm (in.)
23 to 45 (51 to 100)	5 (2)

FIGURE 9

CORNER DROP TESTS FOR PACKAGED HOUSINGS WEIGHING MORE THAN 91 KILOGRAMS (200 POUNDS)

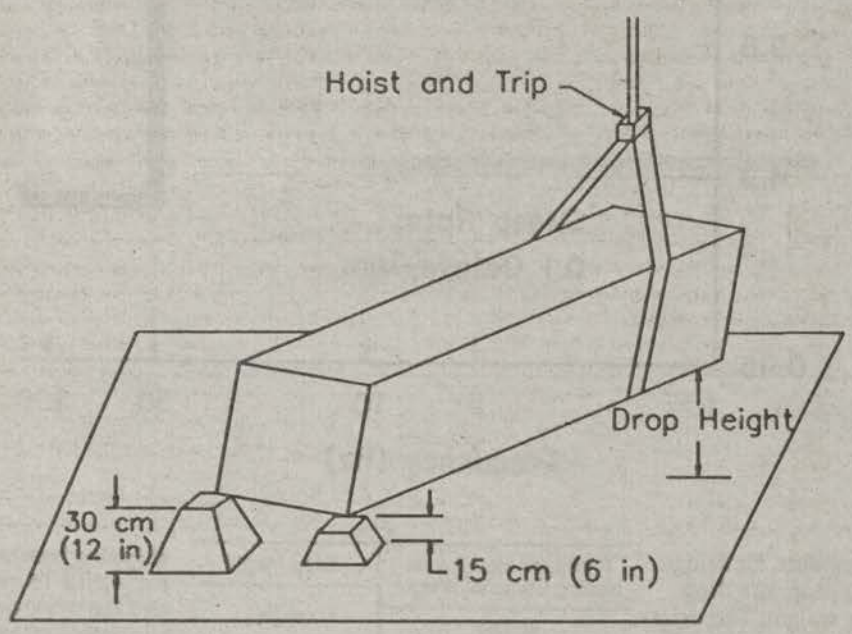

FIGURE 10

EDGE DROP TEST FOR PACKAGED HOUSINIGS WEIGHING MORE THAN 91 KILOGRAMS (200 POUNDS)

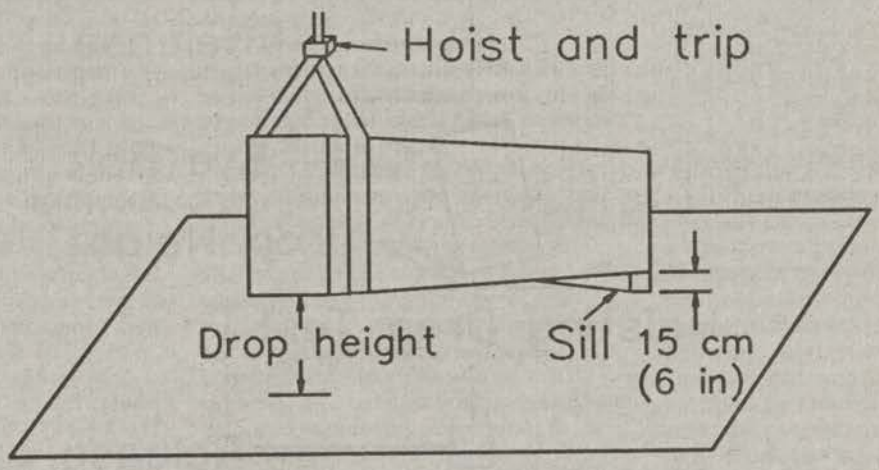

FIGURE 11

DROP TEST FOR UNPACKAGED HOUSINGS WEIGHING MORE THAN 23 KILOGRAMS (50 POUNDS)

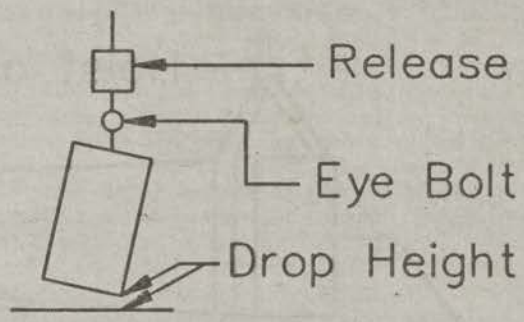

Hoisting Drop Test

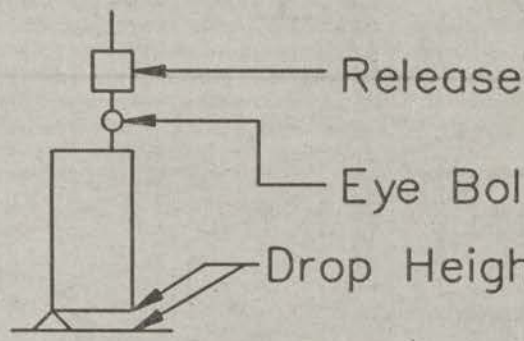

Edge and Corner Drop Test

(v) *Firearms resistance.* All housings shall be tested for resistance to penetration by direct impact from a 12 gauge shotgun equipped with a modified choke and the use of a 3–3/4 dram equivalent powder charge and 35 grams #6 lead shot fired from a distance of 15 m (50 ft). The 12 gauge shotgun shall be fired from a normal standing position at the front side of the housing. Penetration through the housing wall by the lead shot shall constitute failure.

(vi) *Lifting hardware requirements.* The lifting hardware on housings and their contents that weigh more than 91 kg (200 lb) shall be tested. The housing shall be fastened to a restraining device such as a concrete slab and subjected to loading through the lifting attachments to simulate the lifting load. For the first test a lifting line equipped with a dynamometer shall be attached to the housing lifting hardware and a load applied equal to three times the weight of a fully equipped housing. Deformation or damage to the housing or lifting hardware constitutes failure. A second test shall be conducted with the same arrangements as for the first except that a load shall be applied equal to six times the weight of a fully equipped housing. There shall be no catastrophic failure of the lifting hardware or housing.

(vii) *Stub cable strain relief tests.* Housings equipped with cable stubs and cable shipping retainer shall be tested by lifting a test housing, with the maximum length and weight of cable orderable, in a manner causing the full weight of the cable to be supported by the cabinet. Examination of the cable sheath after lifting shall reveal no tearing, rupturing, or other damage. The cable conductors and shield shall be tested for shorts and opens. Electrical defects to the stub cable or damage to the housing constitutes failure.

(viii) *Door restrainer evaluation.* (A) The housing shall be positioned with the door held in the open position by the door restraining device. A load, determined in accordance with the following table, shall be applied to the center of the door, perpendicular to the door and in each of the opening and closing directions.

Maximum Area of Door Surface	Load
cm² (in.²)	kg (lb)
5,200 (800) or less	72 (160)
5,201 to 9,100 (801 to 1,400)	127 (280)
9,101 to 13,000 (1,401 to 2,000)	181 (400)

(B) There shall be no functional failure of the restraining device nor mechanical damage to the housing.

Note: Test procedures for housings with larger doors will be evaluated by REA on a case-by-case basis.

(ix) *Security evaluation.* The security locking device shall be capable of

withstanding a maximum torque of 2.8 N-m (25 lb-in.) without incurring physical damage to the closure, thereby resulting in a condition where the closure cannot be either accessed or locked.

(5) *Electrical requirements for housings.* Each bonding stud and nut location shall be evaluated by attaching one lead from a dc or alternating current (ac) power source to a bonding stud with the nut torqued as specified by its manufacturer and the other power source lead connected to the closure grounding conductor connector. The current path thus established must be capable of sustaining a current of 1000 amperes root-mean-square for at least 20 seconds without fusing or causing any damage to the closure or its contents.

(6) *Finish requirements*—(i) *Impact resistance.* The finish on painted metal surfaces shall not exhibit radial cracking on the impact surface (intrusion) when indented at 18 N-m (160 lb-in.) with a 1.6 cm (0.6 in.) diameter spherical indentor. This test shall be performed in accordance with ASTM D 2794–92 with the exception that the test panel shall be of the same material, thickness, and finish as the pedestal housing being evaluated.

(ii) *Finish adhesion.* Painted finishes shall be tested for adhesion of finish in accordance with ASTM D 2197–86(1991), Method A. There shall be no gouging in the top coat when tested with an 8 kg (17.7 lb) load. Gouging is defined as removal or separation of paint particles or breaking of the finish by the scraping loop to the extent of exposing base metal.

(iii) *Color evaluation.* The color of the housing finish should be compared against the Munsell system of color notation, as described in ASTM D 1535–89 to determine color consistency with that desired.

(iv) *Gloss evaluation.* The finish on painted housings shall be tested on two approximately 20 cm × 20 cm (8 in. × 8 in.) samples for each color used in accordance with the procedures of ASTM D 523–89. The finish shall have a minimum gloss of 60 (60° Specular).

(v) *Secondary finish evaluation.* Evidence of secondary protection shall be required for REA acceptance. Typical secondary protection is galvanizing per ASTM A 526/A 526M-90 for steel surfaces.

(f) *Functional design criteria for binding post terminal blocks used in serving area interface cabinets*—(1) *General description.* A conventional binding post terminal consists of a metallic element or post, one end of which is configured for the permanent connection of 22, 24, or 26 AWG solid copper conductors and the opposite end is configured for recurring connections and disconnections of solid copper cross-connect wire using a threaded screw or stud and nut combination for gripping the wire. The terminal is usually housed in a serving area interface cabinet. However, the terminal may receive limited use in smaller pedestal-type housings and pole mounted cabinets in the outside plant environment.

(2) *Design and fabrication requirements.* (i) Terminal blocks used in outside plant housings are expected to perform satisfactorily for a nominal design life of 30 years.

(ii) All individual terminals or terminal fields must be enclosed and the terminal enclosure must be totally filled with an encapsulating grease or gel which prevents connection degradation caused by moisture and corrosion. The encapsulant must provide complete encapsulation of terminal metallic connections and surfaces and totally fill all voids and cavities within individual terminal enclosures or terminal field enclosures to prevent ingress of moisture. The encapsulant must not restrict access to the terminal or restrict craft personnel from making connections. The encapsulant must be compatible with the standard materials used in cross-connect hardware and wiring.

(iii) Binding post terminals shall not be susceptible to damage under normal use of standard tools used by outside plant technicians such as screwdrivers and test set clips. In addition, use of other tools such as scissors, diagonal cutters and long nose pliers for tightening and loosening screws shall not result in damage to the terminal.

(iv) Terminals shall be designed so that a typical technician using customary tools shall be able to terminate cross-connect wire on a pair of terminals, or to remove it, without causing an electrical short between any two terminals or any other adjacent terminals.

(v) The terminal count sequence shall be indicated using numerals of at least 0.25 cm (0.10 in.) in height.

(vi) A means shall be provided to distinguish feeder terminals from distribution terminals.

(vii) A means shall be provided to identify tip terminals and ring terminals in a terminal field. The identification convention shall indicate tip on the left with ring on the right for horizontal spacing and tip on the top with ring on the bottom for vertical spacing.

(viii) The preferred height of the highest terminal in the connector field in a ground mounted serving area interface unit shall be 168 cm (66 in.) or less as measured from the top surface of the mounting pad. The bottom or lowest terminals in the connector field shall be at least 46 cm (18 in.) from the top surface of the pad.

(ix) Pole mounted aerial units shall be 84 cm (33 in.) or less in width. The maximum allowable height of the highest terminals in a pole mounted aerial unit is 168 cm (66 in.) as measured from the top surface of the standard balcony seat used with the interface. For computation purposes, 15 cm (6 in.) shall be allowed for the distance between the bottom of the interface and the top of the balcony seat.

(3) *Auxiliary features.* (i) Serving area interface cabinets with terminal designs which do not permit direct attachment of common test instrument clips to terminal pairs without the occurrence of shorts shall be equipped with single pair auxiliary test contacts. The auxiliary test contacts shall attach to a terminal pair and provide a set of secondary terminals which will accept typical test instrument clips without the occurrence of shorts. Wire used to connect the auxiliary test contacts to the secondary terminals shall be 20 gauge minimum stranded conductor copper wire with a minimum dielectric strength between conductors of 15 kv. The test connector shall be functional on all terminal pairs.

(ii) A 25 or 50 pair test connector shall be available which can be used to make reliable electrical contact to terminals associated with discrete 25 pair binder groups. The multi-pair test connector shall be provided with a minimum of 1.8 m (6 ft) of suitable cabling terminated to a connector, for interfacing with test sets common to the industry. The multi-pair test connector shall be functional on all terminal groups.

(iii) A special service marker shall be available which must attach to a binding post terminal to identify special circuits and insulate exposed metal parts from accidental shorts from tools and wires. A supply of 25 special service markers shall be provided with each serving area interface cabinet. The color of special service markers shall be red.

(iv) (A) A supply of twisted pair cross-connect wire shall be supplied with housings that are equipped with cross-connect terminals or that have provisions for mounting cross-connect terminals. The minimum length of cross-connect wire supplied is dependent on the serving area interface cabinet terminal capacity as follows:

Cabinet Termination Capacity (Pairs)	Wire Length
1 to 600	60 m (200 ft)
601 to 1200	120 m (400 ft)
over 1200	180 m (600 ft)

(B) The cabinet shall be equipped to store the length of wire in a manner designed for convenient dispensing. The cross-connect wire supply shall be easily replaceable.

(g) *Performance criteria and test procedures for binding post terminal blocks used in serving area interface cabinets*—(1) *General.* Many of the tests described in this section require that the terminal block be installed in an appropriate housing in its typical field configuration.

(2) *Environmental requirements*—(i) *Insulation resistance/high humidity and salt fog exposure.* A test specimen shall consist of a standard ground or pole mounted housing equipped with a full complement of binding post terminals equipped with 25 special service markers. The minimum number of terminals to be tested shall be 100 pair (100 tips and 100 associated rings). The test terminals shall be selected to form a terminal array of approximate square dimensions. A 1 cm (36 in.) length of cross-connect wire shall be installed on each test terminal. All tips shall be joined together and all rings shall be joined together with a 48 volt dc potential applied as shown in Figure 12 during the high humidity/salt fog and simulated rain exposures. The 48 volt dc may be temporarily removed from the test samples during the measurement process and the ring terminal being measured shall be isolated from the remaining ring terminals. The terminal insulation resistance shall be measured at a potential of 100 volts dc using suitable instrumentation with a minimum measurement range of 10^4 to 10^{12} ohms.

FIGURE 12

BINDING POST ARRANGEMENT FOR INSULATION RESISTANCE TESTING

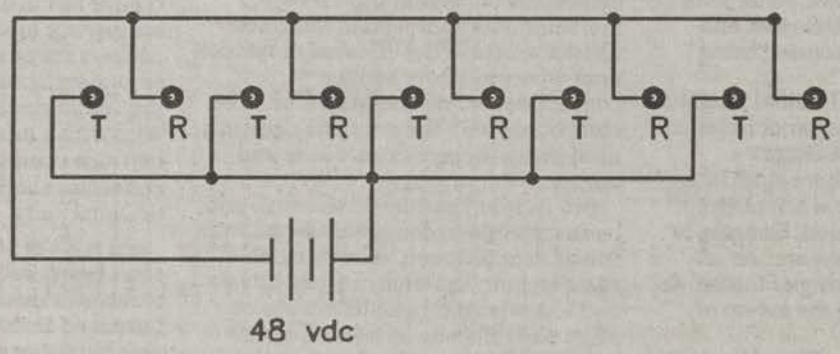

Note: 5 pair specimen arrangement shown is typical for entire (100 pair specimen minimum) test population.

(A) *High humidity.* The test housing shall be placed in an environmental test chamber at 95 ± 3% RH and the temperature cycled as shown in Figure 3 for a period of 30 days. The cabinet doors shall remain in the fully open position. The insulation resistance between the ring terminal of each sample and all the common tip terminals shall be measured each 24 hours when the temperature is between 38 and 57°C (100 and 135°F) and increasing. The minimum insulation resistance when measured in accordance with paragraph (g)(2)(i) of this section shall not be less than 1×10^6 ohms.

(B) *Salt fog.* A test housing with its doors closed shall be placed in a salt fog 35°C (95°F) test chamber and exposed to a salt fog spray per ASTM B 117–90 for a period of 30 days. The insulation resistance should be measured every 24 hours as indicated in paragraph (g)(2)(i) of the section and shall not be less than 1×10^6 ohms. The special service markers shall exhibit no sign of fading, corrosion, swelling, warping, running color, or other signs of deterioration.

(ii) *Insulation resistance/simulated rain exposure.* (A) A test housing as described in paragraph (g)(2)(i) of the section shall be tested for water infiltration. The test shall be conducted using the method described in paragraph (e)(3)(xi) of this section. The cabinet doors shall remain closed for the duration of the test. The insulation resistance between the ring terminals and the common tip terminals shall be measured during and immediately following the spray application as indicated in paragraph (g)(2)(i) of this section and shall not be less than 1×10^6 ohms.

(B) With the cabinet doors open, a spray of tap water at a rate of 3.8 liters per minute (1 gallon per minute) at 276 kilopascals (40 pounds per square inch) shall be directed on the terminal array for a period of 1 minute saturating all of the terminals. Following the spray application the doors shall be closed. The cabinet shall be maintained in a temperature environment of 26 to 28°C (78 to 82°F) at 95 ± 3% RH for 6 hours. The insulation resistance shall then be

measured as specified in paragraph (g)(2)(i) of this section. The minimum insulation resistance shall not be less than 1×10^6 ohms.

(iii) *Contact resistance.* A minimum of 100 terminals equipped with cross-connect wire that has been installed in a manner typical of that used in the industry shall be temperature cycled.

(A) The test shall consist of eight-hour temperature cycles with one-hour dwells at extreme temperatures of −40°C to +60°C (−40°F to +140°F), and temperature changes at an average rate of 16°C (60°F) per hour between the extremes. The relative humidity shall be maintained at 95 ± 3%. The eight-hour test shall be conducted for 512 cycles. Millivolt drop measurements shall be made initially and after 2, 8, 16, 32, 64, 256, and 512 cycles with the samples at room temperature. The resistance measurement technique must conform to ASTM B 539–90. The measurement method must have an accuracy of at least ± 30 microohms for resistances less than 50 milliohms. The change in contact resistance shall not exceed 2 milliohms.

(B) A minimum of 100 terminals equipped with cross-connect wire installed in a manner typical of the industry shall be maintained at 118°C (245°F) during the test period, except during disturbance measurement periods where each wire connection to the terminals shall have a 0.23 kg (0.5 lb) force momentarily applied in a manner to stress the connection. Initial millivolt measurements shall be made without disturbing the joints in accordance with paragraph (g)(2)(iii)(A) of this section with the samples at room temperature. After initial measurement each sample shall be disturbed followed by a millivolt drop measurement after 1, 2, 4, 8, 16, and 33 days. The change in contact resistance shall be less than 2 milliohms when compared to the initial measurement.

(iv) *Fire resistance.* A fully equipped cabinet including a full complement of cross-connect jumpers shall be installed in the standard field arrangement and tested for fire resistance in accordance with paragraphs (e)(3)(xiii) through (e)(3)(xiii)(B) of this section. After cooling, the cabinet, terminals, and associated wiring shall be inspected for signs of ignition, melting, burning, or structural damage of sufficient consequences such that the results are service affecting.

(v) *Encapsulant material compatibility.* The terminal connection encapsulant compound must be compatible with the standard materials used in cross-connect hardware and wiring when aged in accordance with ASTM D 4568–86 at a temperature of 80 ± 1°C (176 ± 2°F). The conductor insulation shall retain a minimum of 85% of its unaged tensile strength and elongation values. The cross-connect hardware shall exhibit no visible material degradation.

(vi) *Encapsulant flow test.* Terminal connection encapsulant must remain stable at 80 ± 1°C (176 ± 2°F) when tested in an environmental chamber. Test specimens shall be suspended in a preheated oven over a glass dish or other drip-catching medium for a period of 24 hours. At the end of the test period, the glass dish shall be examined for evidence of flowing or dripping of encapsulant from the cross-connect terminal. More than 0.5 gram of encapsulant in the dish at the end of the test constitutes failure.

(3) *Mechanical requirements*—(i) *Vibration.* A test housing equipped with a full complement of cross-connect terminals and jumper wiring shall be subjected to vibration testing in accordance with paragraph (e)(4)(iii) of this section.

(ii) *Torsional capacity of binding posts.* The test specimens shall consist of the complete binding post terminal consisting of the screw or nut, washers if required, and threaded post or stud respectively.

(A) Test specimens shall include the terminals along the matrix edge at mid-span locations as well as centrally located terminals. Tests shall be conducted using a torque indicating screwdriver, or wrench, with an accuracy of ± 0.17 N-m (± 1.5 lb-in.) or better. The torque indicating device shall be used to tighten a screw or nut until failure of the screw or nut is achieved. Tests shall be conducted while the test specimen is stabilized at temperatures of −40°C, 20°C, and 71°C (−40°F, +68°F, and at +160°F.) Record the torques at terminal failure. At least 10 test specimens shall be tested at each temperature. The failure torque shall not be less than 2.8 N-m (25.0 lb-in.) for each temperature.

(B) The post or stud of the binding post terminal shall not fail before the screw or nut when increasing torque. The faceplate or receptacle restraining the post or stud shall not fail before the screw or nut when increasing torque.

(iii) *Lateral loading capacity of binding posts.* A minimum of three sets of 25 terminals shall be tested with the test specimens stabilized at temperatures of −40°C, 20°C and 71°C (−40°F, +68°F, and 100°F). The test arrangement shall include the terminals along the matrix edge at mid-span locations as well as centrally located terminals. A force measuring device, such as a dynamometer, shall be attached to the end of a binding post terminal and a 16 kg (35 lb) force applied orthogonally to the terminal axis in 4 perpendicular directions as shown in Figure 13. Permanent deformation in excess of 0.08 cm (0.03 in.) or any structural damage in either the terminal or faceplate constitutes a failure.

FIGURE 13

LATERAL LOADING OF BINDING POST TERMINALS

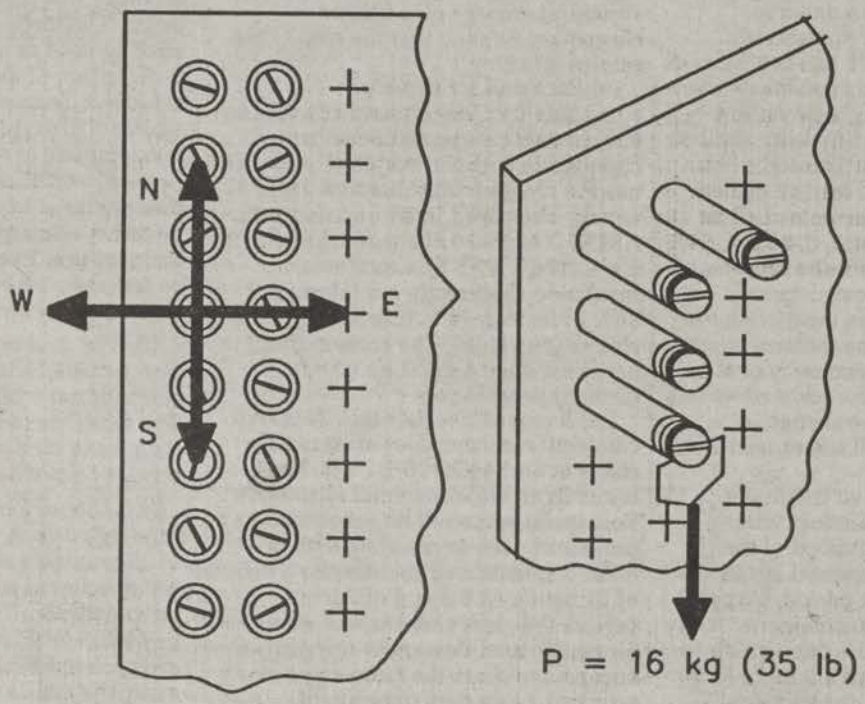

Note: Apply load P in N, E, S, and W directions

(iv) *Axial pullout resistance.* A minimum of three sets of 25 terminals shall be tested with the test specimens stabilized at temperatures of −40°C, 20°C, and 71°C (−40°F, +68°F, and 100°F). The test arrangement shall include the terminals along the matrix edge at mid-span locations as well as centrally located terminals. A force measuring device, such as a dynamometer, shall be attached to a terminal and a force of 16 kg (35 lb) applied on axis as shown in Figure 14. There shall be no permanent deformation in excess of 0.08 cm (0.03 in.), any structural damage, or terminal pull-out in either the terminal or the faceplate.

FIGURE 14

AXIAL PULLOUT OF BINDING POST TERMINALS

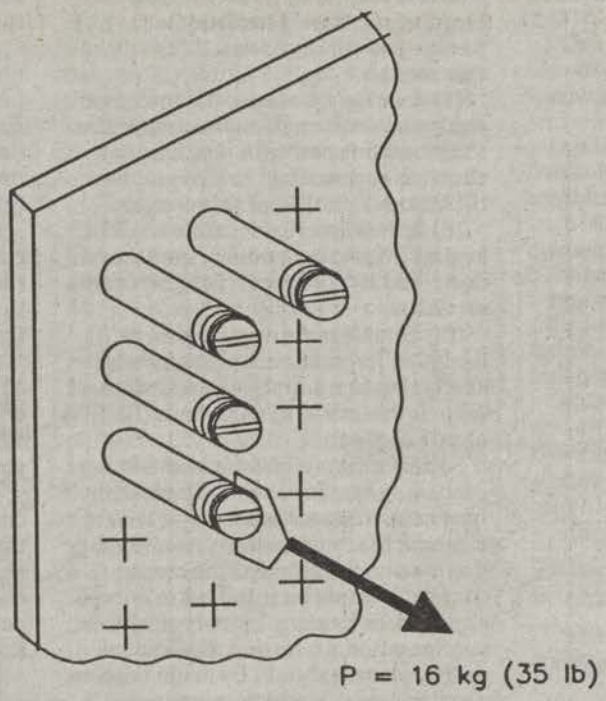

(v) *Test connector reliability.* (A) A single pair connector shall be capable of making a minimum of 100 successive connections to binding post terminals without the occurrence of an open circuit. The test shall include terminals along the matrix edge, center, top, and bottom.

(B) A multi-pair test connector shall be attached to the binding post terminal field and tests for opens between the binding post terminals and the test connector shall be conducted. All circuits must prove good. The test shall be repeated along the terminal matrix edges, center, top, and bottom.

(vi) *Service cycle reliability.* A torque indicating device or wrench with an accuracy of ± 0.17 N-m (± 1.5 lb-in.) or better shall be used to tighten the terminal screw or nut as appropriate to 1.7 N-m (15.0 lb-in.). The terminal nut or screw is then loosened and retightened to 1.7 N-m (15 lb-in.). After 50 repeated connections and disconnections, the terminal shall be placed in an environmental chamber at 95% RH where the temperature shall be cycled as indicated in Figure 3 for a duration of 72 hours. The terminal shall then be momentarily removed from the chamber and the test procedure repeated. After a total of 250 loosening and retightening cycles have accumulated, the terminal must be capable of withstanding a torque of 1.7 N-m (15 lb-in.).

(4) *Dielectric strength.* All housing components in the vicinity of unsheathed field cable conductors, unsheathed housing stub cable or harness conductors, terminals, or cross-connect wire paths shall have a minimum dielectric strength of 500 volts ac to the cabinet grounding and bonding bracket. Dielectric strength is tested by connecting one lead from a 500 volt ac at 0.5 ampere source to the cabinet ground connector and the other lead is passed along the surfaces of all cabinet components in the vicinity of unsheathed cable or harness conductors, cross-connect wire paths, and in the splice area where unsheathed field cable conductors may be located. Sparkover constitutes failure.

(5) *Operational requirements*—(i) *Durability.* In order to verify the durability requirements while minimizing the number of test housings required to complete the test program, the binding posts selected for tests shall be separately identified and then checked to establish compliance after the various tests have been conducted.

(A) Twenty-five jumper connections shall be made on each of two binding post connectors chosen at random from a representative sample in an assembled interface unit. After exposure to this test, these and adjacent connectors shall be inspected for damage such as cracks or chips in metal or plastic parts. Failure consists of structural damage, open circuits through the connector, or inability to pass the torsional, lateral loading, or axial pullout tests described in paragraphs (g)(3)(ii) through (g)(3)(iv) of this section.

(B) Select six binding posts at random in a representative interface. On each connector, attach any test cord included with the unit and then remove the test cord as follows. On binding post sample 1, remove the cord normally ten times. On binding post sample 2, remove the cord ten times by jerking the test leads straight out. In these and the remaining tests, do this without releasing any manual attachment mechanisms. On sample 3, remove ten times by jerking downward at 45° from horizontal; sample 4, upward at 45° ten times; sample 5, left 45° ten times; sample 6, right 45° ten times. Check for opens and damage in the test cord, clips, and connectors. Failure consists of structural damage, open circuits through the connector, or inability of the terminal blocks to pass the torsional, lateral loading, axial pullout, test connector reliability, or dielectric strength tests described in paragraphs (g)(3)(ii) through (g)(3)(v)(B), and paragraph (g)(4) of this section.

(C) Use craft tools such as scissors, diagonal cutters, and long nose pliers to loosen and tighten screws where the binding post design does not prohibit the possibility. Failure consists of severe structural damage.

(h) *Functional design criteria for insulation displacement type cross-connect modules used in serving area interface cabinets*—(1) *General description.* Cross-connect modules normally consist of multiple metallic contact elements that are retained by nonmetallic fixtures. The contact elements are spliced with permanent wire leads compatible for splicing to 22, 24, or 26 gauge cable on one side and configured for the acceptance of recurring connections and disconnections of plastic insulated cross-connect wire on the other side. Cross-connect modules are usually housed in a serving area interface cabinet. However, modules may receive limited usage in smaller pedestal-type housings and cabinets in the outside plant environment.

(2) *Design and fabrication requirements.* (i) All individual terminals or terminal fields must be enclosed and the terminal enclosures must be totally filled with an encapsulating grease or gel which prevents connection degradation caused by moisture and corrosion. The encapsulant must provide complete encapsulation of terminal metallic connections and surfaces and totally fill all voids and cavities within individual terminal enclosures or terminal field enclosures to prevent ingress of moisture. The encapsulant must not restrict access to the terminal or restrict craft personnel from making connections. The encapsulant must be compatible with the standard materials used in cross-connect hardware and wiring.

(ii) The cross-connect module manufacturer shall make available any nonstandard tools and test apparatus which are required for splicing, placing of jumpers, and the performance of maintenance operations.

(iii) The module shall be designed so that a typical outside plant technician using tools shall be able to terminate cross-connect wire on terminals, or to remove them without causing electrical shorts between any other terminals.

(iv) The pair count sequence terminated on a module shall be easily visible and shall have numerals of at least 0.25 cm (0.10 in.) in height.

(v) Feeder terminations shall be easily distinguished from distribution terminations.

(vi) Tip and ring terminations shall be easily visible and shall be identifiable as described in paragraph (f)(2)(vi) of this section.

(vii) The preferred locations for cross-connect modules to be mounted inside a housing is the same as those for terminals and are described in paragraphs (f)(2)(vii) and (f)(2)(viii) of this section.

(3) *Auxiliary features.* (i) Housings equipped with cross-connect modules shall be equipped with auxiliary test contacts as described in paragraphs (f)(3)(i) and (f)(3)(ii) of this section.

(ii) Special service markers shall be available for cross-connect modules as described in paragraph (f)(3)(iii) of this section.

(iii) Housings equipped with, or designed for, cross-connect modules shall contain a supply of cross-connect wire as described in paragraph (f)(3)(iv) of this section.

(i) *Performance criteria and test procedures for insulation displacement type cross-connect modules*—(1) *General.* Many of the tests described in this section require that the cross-connect module be installed in an appropriate housing in its typical field configuration for testing. Resistance measurements should be made with an electrical device which measures changes in resistance for each test parameter measured. The tests specified provide and indication of the stability of the electrical connections under the test conditions encountered.

(2) *Environmental requirements.* (i) A fully equipped arrangement of cross-connect modules having approximately 25 special service markers shall successfully complete environmental testing in accordance with paragraphs (e)(3) introductory text through (e)(3)(xiii)(B) of this section.

(ii) *Insulation resistance/high humidity and salt fog exposure.* Insulation resistance measurements shall not be less than 1×10^6 ohms when cross-connect modules are tested by a procedure similar to that described in paragraphs (g)(2)(i) introductory text through (g)(2)(i)(B) of this section.

(iii) *Insulation resistance/simulated rain exposure.* Insulation resistance measurements shall not be less than 1×10^6 ohms when cross-connect modules are tested by a procedure similar to that described in paragraphs (g)(2)(ii) introductory text through (g)(2)(ii)(B) of this section.

(iv) *Contact resistance.* The change in contact resistance shall not exceed 2 milliohms when cross-connect modules are tested by a procedure similar to that described in paragraphs (g)(2)(iii) introductory text through (g)(2)(iii)(B) of this section.

(v) *Fire resistance.* A housing fully equipped with cross-connect modules and jumper wiring shall be tested for fire resistance by a procedure similar to that described in paragraph (g)(2)(iv) of this section.

(vi) *Encapsulant material compatibility.* Cross-connect wire insulation and cross-connect hardware shall exhibit no visible material degradation when tested by the procedure described in paragraph (g)(2)(v) of this section.

(vii) *Encapsulant flow test.* The cross-connect contact encapsulant shall drip no more than 0.5 gram when tested by the procedure described in paragraph (g)(2)(vi) of this section.

(3) *Mechanical requirements*—(i) *Vibration.* A housing fully equipped with cross-connect modules shall be vibration tested in accordance with paragraph (g)(3)(i) of this section.

(ii) *Test connector reliability.* The test connectors supplied with housings intended for cross-connect modules shall successfully complete 100 successive connections as described in paragraphs (g)(3)(v) introductory text through (g)(3)(v)(B) of this section.

(iii) *Service cycle reliability.* A combination of multiple insertions of jumper wires, vibration, and temperature cycling shall be performed on cross-connect modules. The multiple insertions on approximately 100 connections shall be accomplished by 300 operations consisting of insertion, removal and reinsertion of new jumper wire. Contact resistance shall be measured and the final insertion of jumper wire shall not be removed from the connectors but must be subjected to vibration testing in accordance with paragraph (g)(3)(i) of this section and temperature cycled as indicated in Figure 3 for a duration of 72 hours. After vibration and temperature cycling, the average change in contact resistance shall be no greater than 2 milliohms.

(iv) *Jumper wire pull-out resistance.* Test modules that have received no prior conditioning shall be equipped with 100 38 cm (15 in.) jumper connections of the gauges recommended for use with the module using the insertion tool recommended by the cross-connect module manufacturer. With the test samples suitably supported, wires from each sample shall be pulled, one at a time, by a tensile machine at a cross-head speed of 6 centimeters per minute (cm/min) (2.4 inches per minute (in./min)). Wires shall be pulled both perpendicular and parallel to the plane of the cross-connect field and shall withstand a load of at least 1.1 kg (2.5 lb) before pulling out.

(v) *Cable conductor pull-out resistance.* Test modules that have received no prior conditioning shall be equipped with 100 26, 24, and 22 AWG 38 cm (15 in.) cable conductors using the insertion tool recommended by the cross-connect module manufacturer. With the test samples suitably supported, conductors from each sample shall be pulled, one at a time, by a tensile machine at a cross-head speed of 6 cm/min (2.4 in./min). Wires shall be pulled both perpendicular and parallel to the plane of the face of the splice module and shall withstand a load of at least 1.1 kg (2.5 lb) before pulling out.

(4) *Electrical requirements*—(i) *Dielectric strength.* A housing fully equipped with cross-connect modules shall be tested for dielectric strength in accordance with paragraph (g)(4) of this section.

(ii) The dielectric strength of a contact within the cross-connect module to contacts on either side shall be tested. The module shall be tested in a dry environment with an ac power source capable of supplying 8 kv at a rate of increase of 500 volts per second, a circuit breaker to open at breakdown, and a voltmeter to record the breakdown potential. Cross-connect modules shall be prepared in accordance with industry accepted splicing techniques with leads trimmed to approximately 38 cm (15 in.). The dielectric strength of each contact to the contacts on either side shall have an average dielectric strength of approximately 5.0 kv.

(5) *Operational requirements*—(i) *Durability.* In order to verify the durability requirements while minimizing the number of test housings required to complete the test program, the contacts selected for tests shall be separately identified and then checked to establish compliance after the various tests have been conducted.

(ii) Twenty-five jumper connections shall be made on each of two contacts chosen at random from a representative sample in an assembled interface unit. After this test, these and surrounding contacts shall be inspected for damage such as cracks or chips in metal or plastic parts. Failure consists of structural damage, open circuits through the connector, or inability to pass the jumper wire pullout tests described in paragraph (i)(3)(iv) of this section.

(iii) Select six contacts at random in a representative interface. On each of these contacts attach any test cord included with the unit as specified under normal use of that cord and then remove the test cord as follows. On sample 1, remove the cord normally ten times. On sample 2, remove the clip ten times by jerking the test leads straight out. In these and the remaining tests, do this without releasing any manual attachment mechanisms. On sample 3, remove ten times by jerking downward at 45° from horizontal; sample 4, upward 45° ten times; sample 5, left 45° ten times; sample 6, right 45° ten times. Check for opens and damage in the test cord, clips, and cross-connect modules. Failure consists of structural damage, open circuits through the connector, or inability of module to pass the test connector reliability, jumper wire pullout, and dielectric strength tests described in paragraphs (i)(3)(ii), (i)(3)(iv), and (i)(4)(ii) of this section.

(j) *Packaging and identification requirements*—(1) *Product identification.* (i) Each housing, terminal block, or cross-connect module shall be permanently marked with the manufacturer's name or trade mark.

(ii) The date of manufacture, model number, serial number and REA assigned designations shall be placed on a decal inside housings. The product identification nomenclature must correspond with the nomenclature used in the manufacturer's quality assurance program.

(2) *Packaging requirements.* (i) Buried plant housings shall be packaged securely in an environmentally safe container to prevent either deterioration or physical damage to the unit during shipment, handling and storage.

(ii) The product with all the necessary parts shall be shipped in one container unless significant advantages to the user can be obtained otherwise. Packaging of parts in the carton shall be such that the parts become available in the order in which they are needed. The package should be clearly marked as to which end to open. Packages shall be clearly labeled, and correspond to the names given in the instructions.

(iii) Products packed in shipping containers shall be cushioned, blocked, braced, and anchored to prevent movement and damage.

(iv) All products shall be secured to pallets with non-metallic strapping. The strapping and the manner employed shall be of sufficient quantity, width, and thickness to preclude failure during transit and handling.

(v) The use of shrink or stretch film to secure the load to the pallet is permitted. However, such film must be applied over the required strapping.

(vi) Containers that are too large or heavy to be palletized, such as crates, shall be shipped in their own containers. When practical, these containers shall be provided with skids to facilitate fork-lift handling.

(vii) When packaged, the outer cartons shall meet the requirements of the Uniform Freight Classification and the National Motor Freight Classification.

(3) *Container marking requirements.* (i) The package shall be readily identifiable as to the manufacturer, model number, date of manufacture, and serial number.

(ii) The REA assigned housing designation shall be stamped or marked on the outside of the package container with letter and number sizes large enough for easy identification.

(iii) Each package shall be marked with its approximate gross weight.

(iv) All containers carrying delicate or fragile items shall be marked to clearly identify this condition.

(v) All marking shall be clear, legible, and as large as space permits.

Dated: August 7, 1993.

Bob J. Nash,

Under Secretary, Small Community and Rural Development.

[FR Doc 93-21208 Filed 8-31-93; 8:45 am]

BILLING CODE 3410-15-F

DEPARTMENT OF TRANSPORTATION

Federal Aviation Administration

14 CFR Part 39

[Docket No. 93-CE-01-AD]

Airworthiness Directives: Beech Aircraft Corporations 33, 34, 35, 36, 45, 55, 56TC, 58, 58P, 58TC, 60, and 95 Series Airplanes

AGENCY: Federal Aviation Administration (FAA), DOT.

ACTION: Proposed rule; withdrawal.

SUMMARY: This document withdraws a notice of proposed rulemaking (NPRM) that would have applied to certain Beech Aircraft Corporations (Beech) 33, 34, 35, 36, 45, 55, 56TC, 58, 58P, 58TC, 60, and 95 series airplanes. The proposed action would have required inspecting the flap motor drive shaft to ensure that the flap flex cable shaft is properly connected, and correcting if improperly connected. Since issuance of the NPRM and after further review of all available information, the Federal Aviation Administration (FAA) has determined that the proposed rule does not constitute an unsafe condition under current FAA regulations. Flight tests during the certification process of the affected airplanes showed that these airplanes are controllable with an unsymmetrical flap condition. Accordingly, the proposed rule is withdrawn.

FOR FURTHER INFORMATION CONTACT: Mr. Larry Engler Aerospace Engineer, Wichita Aircraft Certification Office, FAA, 1801 Airport Road, Mid-Continent Airport, Wichita, Kansas 67209; Telephone (316) 946–4122; Facsimile (316) 946–4407.

SUPPLEMENTARY INFORMATION: A proposal to amend part 39 of the Federal Aviation Regulations to include an AD that would apply to certain Beech 33, 34, 35, 36, 45, 55, 56TC, 58, 58P, 60, and 95 series airplanes was published in the **Federal Register** on March 2, 1993 (58 FR 11996). The action proposed to require inspecting the flap motor drive shaft for proper connection of the flap flex cable shaft, and correcting if necessary. The proposed actions would be accomplished in accordance with the instructions in Beech SB No. 2460, dated December 1992.

Interested persons have been afforded an opportunity to participate in the making of this amendment. Due consideration has been given to the comment received.

The commenter states that there is no technical justification for the proposed AD because the affected airplanes have demonstrated in-flight controllability with one flap fully extended and the other flap retracted. After further investigation of all information available, the FAA concurs that the proposed rule does not constitute an unsafe condition under current FAA regulations. Flight tests during the original certification process for the affected airplanes showed that these airplanes can, as quoted from 14 CFR ch. 1, paragraph 23.701, Flap interconnection:

(2) maintain synchronization so that the occurrence of an unsafe condition has been shown to be extremely improbable;

Accordingly, the proposed rule is withdrawn.

Withdrawal of this NPRM constitutes only such action, and does not preclude the agency from issuing another notice in the future, nor does it commit the agency to any course of action in the future.

Since this action only withdraws an NPRM, it is neither a proposed nor a final rule and therefore, is not covered under Executive Order 12291, the Regulatory Flexibility Act, or DOT Regulatory Policies and Procedures (44 FR 11034, February 26, 1979).

List of Subjects in 14 CFR Part 39

Air transportation, Aircraft, Aviation safety, Safety.

The Withdrawal

Accordingly, the notice of proposed rulemaking, Docket No. 93–CE–01–AD, published in the **Federal Register** on March 2, 1993 (58 FR 11996), is withdrawn.

Issued in Kansas City, Missouri, on August 26, 1993.

William J. Timberlake,

Acting Manager, Small Airplane Directorate, Aircraft Certification Service.

[FR Doc. 93–21219 Filed 8–31–93; 8:45 am]

BILLING CODE 4910–13–U

---

14 CFR Part 39

[Docket No. 93–NM–113–AD]

Airworthiness Directives; Fokker Model F28 Mark 0100 Series Airplanes

AGENCY: Federal Aviation Administration, DOT.

ACTION: Notice of proposed rulemaking (NPRM).

SUMMARY: This document proposes the adoption of a new airworthiness directive (AD) that is applicable to certain Fokker Model F28 Mark 0100 series airplanes. This proposal would require replacement of the existing attachment bolts on the horizontal stabilizer with new, improved bolts having a longer fatigue life. This proposal is prompted by a report that certain attachment bolts on the horizontal stabilizer were not properly treated on the surface during production, resulting in reduced fatigue life. The actions specified by the proposed AD are intended to prevent corrosion and subsequent fatigue-related cracking of the attachment bolts on the horizontal stabilizer, which could lead to loss of stabilizer control.

DATES: Comments must be received by October 27, 1993.

ADDRESSES: Submit comments in triplicate to the Federal Aviation Administration (FAA), Transport Airplane Directorate, ANM–103, Attention: Rules Docket No. 93–NM–113–AD, 1601 Lind Avenue, SW., Renton, Washington 98055–4056. Comments may be inspected at this location between 9 a.m. and 3 p.m., Monday through Friday, except Federal holidays.

The service information referenced in the proposed rule may be obtained from Fokker Aircraft USA, Inc., 1199 North Fairfax Street, Alexandria, Virginia 22314. This information may be examined at the FAA, Transport Airplane Directorate, 1601 Lind Avenue, SW., Renton, Washington.

FOR FURTHER INFORMATION CONTACT: Mark Quam, Aerospace Engineer, ANM–113, FAA, Transport Airplane Directorate, 1601 Lind Avenue, SW., Renton, Washington 98055–4056; telephone (206) 227–2145; fax (206) 227–1320.

SUPPLEMENTARY INFORMATION:

Comments Invited

Interested persons are invited to participate in the making of the proposed rule by submitting such written data, views, or arguments as they may desire. Communications shall identify the Rules Docket number and be submitted in triplicate to the address specified above. All communications received on or before the closing date for comments, specified above, will be considered before taking action on the proposed rule. The proposals contained in this notice may be changed in light of the comments received.

Comments are specifically invited on the overall regulatory, economic, environmental, and energy aspects of the proposed rule. All comments submitted will be available, both before and after the closing date for comments, in the Rules Docket for examination by interested persons. A report summarizing each FAA-public contact concerned with the substance of this proposal will be filed in the Rules Docket.

Commenters wishing the FAA to acknowledge receipt of their comments submitted in response to this notice must submit a self-addressed, stamped postcard on which the following statement is made: "Comments to Docket Number 93–NM–113–AD." The postcard will be date stamped and returned to the commenter.

Availability of NPRMs

Any person may obtain a copy of this NPRM by submitting a request to the FAA, Transport Airplane Directorate, ANM–103, Attention: Rules Docket No. 93–NM–113–AD, 1601 Lind Avenue, SW., Renton, Washington 98055–4056.

Discussion

The Rijksluchtvaartdienst (RLD), which is the airworthiness authority for the Netherlands, recently notified the FAA that an unsafe condition may exist on certain Fokker Model F28 Mark 0100 series airplanes. The RLD advises that a pre-delivery check of one airplane revealed that certain bolts that attach the link assemblies on the dual actuator to the bracket of the horizontal stabilizer were not properly treated on the surface during production. The improperly treated bolts have a reduced fatigue life of 13,500 total landings. This condition,

if not corrected, could lead to corrosion and subsequent fatigue-related cracking of the attachment bolts on the horizontal stabilizer, which could result in loss of stabilizer control. (A fleet evaluation by the manufacturer has shown no in-service problems to date, however.)

Fokker has issued Service Bulletin SBF100-27-037, dated April 3, 1992, that describes procedures for replacement of the existing bolts that attach the link assemblies on the dual actuator to the drive bracket of the horizontal stabilizer with new, improved bolts; and instructions for performing a functional test. The new, improved bolts have a lengthened fatigue life. The manufacturer has installed the new, improved bolts on airplanes having serial numbers 11315 and subsequent prior to delivery. The RLD classified this service bulletin as mandatory and issued Netherlands Airworthiness Directive BLA 92-051, dated April 8, 1992, in order to assure the continued airworthiness of these airplanes in the Netherlands.

This airplane model is manufactured in the Netherlands and is type certificated for operation in the United States under the provisions of section 21.29 of the Federal Aviation Regulations and the applicable bilateral airworthiness agreement. Pursuant to this bilateral airworthiness agreement, the RLD has kept the FAA informed of the situation described above. The FAA has examined the findings of the RLD, reviewed all available information, and determined that AD action is necessary for products of this type design that are certificated for operation in the United States.

Since an unsafe condition has been identified that is likely to exist or develop on other airplanes of the same type design registered in the United States, the proposed AD would require replacement of the existing bolts that attach the link assemblies on the dual actuator to the drive bracket on the horizontal stabilizer with improved bolts having a longer fatigue life, and performance of a functional test. The actions would be required to be accomplished in accordance with the service bulletin described previously.

The FAA estimates that 20 airplanes of U.S. registry would be affected by this proposed AD, that it would take approximately 11 work hours per airplane to accomplish the proposed actions, and that the average labor rate is $55 per work hour. Required parts would cost approximately $1,100 per airplane. Based on these figures, the total cost impact of the proposed AD on U.S. operators is estimated to be $34,100, or $1,705 per airplane. This total cost figure assumes that no operator has yet accomplished the proposed requirements of this AD action.

The regulations proposed herein would not have substantial direct effects on the States, on the relationship between the national government and the States, or on the distribution of power and responsibilities among the various levels of government. Therefore, in accordance with Executive Order 12612, it is determined that this proposal would not have sufficient federalism implications to warrant the preparation of a Federalism Assessment.

For the reasons discussed above, I certify that this proposed regulation (1) is not a "major rule" under Executive Order 12291; (2) is not a "significant rule" under the DOT Regulatory Policies and Procedures (44 FR 11034, February 26, 1979); and (3) if promulgated, will not have a significant economic impact, positive or negative, on a substantial number of small entities under the criteria of the Regulatory Flexibility Act. A copy of the draft regulatory evaluation prepared for this action is contained in the Rules Docket. A copy of it may be obtained by contacting the Rules Docket at the location provided under the caption ADDRESSES.

List of Subjects in 14 CFR Part 39

Air transportation, Aircraft, Aviation safety, Safety.

The Proposed Amendment

Accordingly, pursuant to the authority delegated to me by the Administrator, the Federal Aviation Administration proposes to amend 14 CFR part 39 of the Federal Aviation Regulations as follows:

PART 39—AIRWORTHINESS DIRECTIVES

1. The authority citation for part 39 continues to read as follows:

Authority: 49 U.S.C. App. 1354(a), 1421 and 1423; 49 U.S.C. 106(g); and 14 CFR 11.89.

§ 39.13 [Amended]

2. Section 39.13 is amended by adding the following new airworthiness directive:

Fokker: Docket 93-NM-113-AD.

Applicability: Model F28 Mark 0100 series airplanes, serial numbers 11244 through 11300 inclusive, 11303, 11306, 11308, 11310, and 11312 through 11314 inclusive; certificated in any category.

Compliance: Required as indicated, unless accomplished previously.

To prevent corrosion and subsequent fatigue-related cracking of the attachment bolts on the horizontal stabilizer, which could lead to loss of stabilizer control, accomplish the following:

(a) Prior to the accumulation of 13,500 total landings or within 12 months after the effective date of this AD, whichever occurs later, replace the two existing bolts, part number D03000-017, that attach the link assemblies on the dual actuator to the drive bracket of the horizontal stabilizer, with new, improved bolts, part number DO3000-021; and perform a functional test; in accordance with Fokker Service Bulletin SBF100-27-037, dated April 3, 1992.

(b) As of the effective date of this AD, no person shall install an attachment bolt, part number D03000-017, on the horizontal stabilizer on any airplane.

(c) An alternative method of compliance or adjustment of the compliance time that provides an acceptable level of safety may be used if approved by the Manager, Standardization Branch, ANM-113. Operators shall submit their requests through an appropriate FAA Principal Maintenance Inspector, who may add comments and then send it to the Manager, Standardization Branch, ANM-113.

Note: Information concerning the existence of approved alternative methods of compliance with this AD, if any, may be obtained from the Standardization Branch, ANM-113.

(d) Special flight permits may be issued in accordance with FAR 21.197 and 21.199 to operate the airplane to a location where the requirements of this AD can be accomplished.

Issued in Renton, Washington, on August 26, 1993.

David G. Hmiel,

Acting Manager, Transport Airplane Directorate, Aircraft Certification Service.

[FR Doc. 93-21221 Filed 8-31-93; 8:45 am]

BILLING CODE 4910-13-P

---

14 CFR Part 39

[Docket No. 93-NM-104-AD]

Airworthiness Directives; Israel Aircraft Industries Ltd. Model 1121 and 1123 Series Airplanes

AGENCY: Federal Aviation Administration, DOT.

ACTION: Notice of proposed rulemaking (NPRM).

SUMMARY: This document proposes the adoption of a new airworthiness directive (AD) that is applicable to certain Israel Aircraft Industries Ltd. Model 1121 and 1123 series airplanes. This proposal would require an inspection to detect damage of the wing lower center skin, lower aft skin, and rear spar under the main landing gear (MLG) wheel fairings; measurement and repair of damaged parts; and rework of the MLG wheel fairing ribs. This proposal is prompted by reports of chafing of the stiffening ribs of the MLG

wheel fairings into the lower wing skins and aft spar. The actions specified by the proposed AD are intended to prevent reduced structural integrity of the wings.

DATES: Comments must be received by October 27, 1993.

ADDRESSES: Submit comments in triplicate to the Federal Aviation Administration (FAA), Transport Airplane Directorate, ANM–103, Attention: Rules Docket No. 93–NM–104–AD, 1601 Lind Avenue, SW., Renton, Washington 98055–4056. Comments may be inspected at this location between 9 a.m. and 3 p.m., Monday through Friday, except Federal holidays.

The service information referenced in the proposed rule may be obtained from Astra Jet Corporation, Technical Publications, 77 McCullough Drive, suite 11, New Castle, Delaware 19720. This information may be examined at the FAA, Transport Airplane Directorate, 1601 Lind Avenue SW., Renton, Washington.

FOR FURTHER INFORMATION CONTACT: Timothy J. Dulin, Aerospace Engineer, Standardization Branch, ANM–113, FAA, Transport Airplane Directorate, 1601 Lind Avenue SW., Renton, Washington 98055–4056; telephone (206) 227–2141; fax (206) 227–1320.

SUPPLEMENTARY INFORMATION:

Comments Invited

Interested persons are invited to participate in the making of the proposed rule by submitting such written data, views, or arguments as they may desire. Communications shall identify the Rules Docket number and be submitted in triplicate to the address specified above. All communications received on or before the closing date for comments, specified above, will be considered before taking action on the proposed rule. The proposals contained in this notice may be changed in light of the comments received.

Comments are specifically invited on the overall regulatory, economic, environmental, and energy aspects of the proposed rule. All comments submitted will be available, both before and after the closing date for comments, in the Rules Docket for examination by interested persons. A report summarizing each FAA-public contact concerned with the substance of this proposal will be filed in the Rules Docket.

Commenters wishing the FAA to acknowledge receipt of their comments submitted in response to this notice must submit a self-addressed, stamped postcard on which the following statement is made: "Comments to Docket Number 93–NM–104–AD." The postcard will be date stamped and returned to the commenter.

Availability of NPRMs

Any person may obtain a copy of this NPRM by submitting a request to the FAA, Transport Airplane Directorate, ANM–103, Attention: Rules Docket No. 93–NM–104–AD, 1601 Lind Avenue, SW., Renton, Washington 98055–4056.

Discussion

The Civil Aviation Administration of Israel (CAAI), which is the airworthiness authority for Israel, recently notified the FAA that an unsafe condition may exist on certain Model 1121 and 1123 series airplanes. The CAAI advises that recent reports have been received indicating that the stiffening ribs of the main landing gear (MLG) wheel fairings on two Model 1121 series airplanes were chafing into the lower wing skins and aft spar. Subsequent investigation revealed that the ribs of the fairings do not provide adequate stiffness. This condition, if not corrected, could result in reduced structural integrity of the wings.

The MLG wheel fairing ribs installed on the Model 1121 series airplanes are similar in design to those of the Model 1123 series airplanes. Therefore, the Model 1123 may be subject to the same unsafe condition revealed in the Model 1121.

Israel Aircraft Industries Ltd. has issued Service Bulletins SB 1121–57–018 (for Model 1121 series airplanes) and 1123–57–035 (for Model 1123 series airplanes), both dated November 25, 1992, that describe procedures for a one-time visual inspection to detect damage of the wing lower center skin, lower aft skin, and rear spar under the left- and right-hand MLG wheel fairings; measurement and repair of damaged parts; and rework of the MLG wheel fairing ribs. The CAAI classified these service bulletins as mandatory and issued Israeli Airworthiness Directive 92–03, Revision 1, dated November 23, 1992, in order to assure the continued airworthiness of these airplanes in Israel.

This airplane model is manufactured in Israel and is type certificated for operation in the United States under the provisions of § 21.29 of the Federal Aviation Regulations and the applicable bilateral airworthiness agreement. Pursuant to this bilateral airworthiness agreement, the CAAI has kept the FAA informed of the situation described above. The FAA has examined the findings of the CAAI, reviewed all available information, and determined that AD action is necessary for products of this type design that are certificated for operation in the United States.

Since an unsafe condition has been identified that is likely to exist or develop on other airplanes of the same type design registered in the United States, the proposed AD would require a one-time visual inspection to detect damage of the wing lower center skin, lower aft skin, and rear spar, under the left- and right-hand MLG wheel fairings; measurement and repair of damaged parts, prior to further flight; and rework of the MLG wheel fairing ribs. The actions would be required to be accomplished in accordance with the service bulletins described previously.

The FAA estimates that 45 airplanes of U.S. registry would be affected by this proposed AD, that it would take approximately 20 work hours per airplane to accomplish the proposed actions, and that the average labor rate is $55 per work hour. The cost of required parts is expected to be negligible. Based on these figures, the total cost impact of the proposed AD on U.S. operators is estimated to be $49,500, or $1,100 per airplane. This total cost figure assumes that no operator has yet accomplished the proposed requirements of this AD action.

The regulations proposed herein would not have substantial direct effects on the States, on the relationship between the national government and the States, or on the distribution of power and responsibilities among the various levels of government. Therefore, in accordance with Executive Order 12612, it is determined that this proposal would not have sufficient federalism implications to warrant the preparation of a Federalism Assessment.

For the reasons discussed above, I certify that this proposed regulation (1) is not a "major rule" under Executive Order 12291; (2) is not a "significant rule" under the DOT Regulatory Policies and Procedures (44 FR 11034, February 26, 1979); and (3) if promulgated, will not have a significant economic impact, positive or negative, on a substantial number of small entities under the criteria of the Regulatory Flexibility Act. A copy of the draft regulatory evaluation prepared for this action is contained in the Rules Docket. A copy of it may be obtained by contacting the Rules Docket at the location provided under the caption "ADDRESSES."

List of Subjects in 14 CFR Part 39

Air transportation, Aircraft, Aviation safety, Safety.

The Proposed Amendment

Accordingly, pursuant to the authority delegated to me by the Administrator, the Federal Aviation Administration proposes to amend 14 CFR part 39 of the Federal Aviation Regulations as follows:

PART 39—AIRWORTHINESS DIRECTIVES

1. The authority citation for part 39 continues to read as follows:

Authority: 49 U.S.C. App. 1354(a), 1421 and 1423; 49 U.S.C. 106(g); and 14 CFR 11.89.

§ 39.13 [Amended]

2. Section 39.13 is amended by adding the following new airworthiness directive:

Israel Aircraft Industries (IAI) Ltd.: Docket 93–NM–104–AD.

Applicability: Model 1121 series airplanes, serial numbers 071 through 106 inclusive, and 108 through 150 inclusive; and Model 1123 series airplanes, serial number 107; certificated in any category.

Compliance: Required as indicated, unless accomplished previously.

To prevent reduced structural integrity of the wings, accomplish the following:

(a) Within 50 hours time-in-service after the effective date of this AD, remove the left- and right-hand main landing gear (MLG) wheel fairings, and perform a visual inspection to detect damage of the wing lower center skin, lower aft skin, and rear spar under the fairings, in accordance with Israel Aircraft Industries Ltd. Service Bulletin SB 1121–57–018 (for Model 1121 series airplanes), dated November 25, 1992; or Israel Aircraft Industries Ltd. Service Bulletin SB 1123–57–035 (for Model 1123 series airplanes), dated November 25, 1992; as applicable.

(1) If no damage is detected, prior to further flight, rework the MLG wheel fairing ribs and reinstall the left- and right-hand MLG wheel fairings, in accordance with the applicable service bulletin.

(2) If any damage is detected, prior to further flight, measure the depth of the damage; repair any damage found, rework the MLG wheel fairing ribs, and reinstall the left- and right-hand MLG wheel fairings, in accordance with the applicable service bulletin.

(b) If any crack is detected during the repair required by paragraph by paragraph (a)(2) of this AD, prior to further flight, repair in accordance with a method approved by the Manager, Standardization Branch, ANM–113, FAA, Transport Airplane Directorate.

(c) An alternative method of compliance or adjustment of the compliance time that provides an acceptable level of safety may be used if approved by the Manager, Standardization Branch, ANM–113, FAA, Transport Airplane Directorate. Operators shall submit their requests through an appropriate FAA Principal Maintenance Inspector, who may add comments and then send it to the Manager, Standardization Branch, ANM–113.

Note: Information concerning the existence of approved alternative methods of compliance with this AD, if any, may be obtained from the Standardization Branch, ANM–113.

(d) Special flight permits may be issued in accordance with FAR 21.197 and 21.199 to operate the airplane to a location where the requirements of this AD can be accomplished.

Issued in Renton, Washington, on August 26, 1993.

David G. Hmiel,

Acting Manager, Transport Airplane Directorate, Aircraft Certification Service.

[FR Doc. 93–21222 Filed 8–31–93; 8:45 am]

BILLING CODE 4910–13–P

---

14 CFR Part 39

[Docket No. 93–NM–107–AD]

Airworthiness Directives; Fokker Model F28 Mark 0100 Series Airplanes

AGENCY: Federal Aviation Administration, DOT.

ACTION: Notice of proposed rulemaking (NPRM).

SUMMARY: This document proposes the adoption of a new airworthiness directive (AD) that is applicable to certain Fokker Model F28 Mark 0100 series airplanes. This proposal would require replacement of the existing ground/flight microswitches located in the main landing gear with improved microswitches, and installation of an anti-skid system ON/OFF switch in the flight compartment. This proposal is prompted by an incident involving loss of braking, which was caused by mechanical ground/flight microswitches that froze while in the flight position. The actions specified by the proposed AD are intended to prevent loss of braking below 40 miles per hour, when the anti-skid system is activated.

DATES: Comments must be received by October 27, 1993.

ADDRESSES: Submit comments in triplicate to the Federal Aviation Administration (FAA), Transport Airplane Directorate, ANM–103, Attention: Rules Docket No. 93–NM–107–AD, 1601 Lind Avenue SW., Renton, Washington 98055–4056. Comments may be inspected at this location between 9 a.m. and 3 p.m., Monday through Friday, except Federal holidays.

The service information referenced in the proposed rule may be obtained from Fokker Aircraft USA, Inc., 1199 North Fairfax Street, Alexandria, Virginia 22314. This information may be examined at the FAA, Transport Airplane Directorate, 1601 Lind Avenue, SW., Renton, Washington.

FOR FURTHER INFORMATION CONTACT: Timothy Dulin, Aerospace Engineer, Standardization Branch, ANM–113, FAA, Transport Airplane Directorate, 1601 Lind Avenue, SW., Renton, Washington 98055–4056; telephone (206) 227–2141; fax (206) 227–1320.

SUPPLEMENTARY INFORMATION:

Comments Invited

Interested persons are invited to participate in the making of the proposed rule by submitting such written data, views, or arguments as they may desire. Communications shall identify the Rules Docket number and be submitted in triplicate to the address specified above. All communications received on or before the closing date for comments, specified above, will be considered before taking action on the proposed rule. The proposals contained in this notice may be changed in light of the comments received.

Comments are specifically invited on the overall regulatory, economic, environmental, and energy aspects of the proposed rule. All comments submitted will be available, both before and after the closing date for comments, in the Rules Docket for examination by interested persons. A report summarizing each FAA-public contact concerned with the substance of this proposal will be filed in the Rules Docket.

Commenters wishing the FAA to acknowledge receipt of their comments submitted in response to this notice must submit a self-addressed, stamped postcard on which the following statement is made: "Comments to Docket Number 93–NM–107–AD." The postcard will be date stamped and returned to the commenter.

Availability of NPRMs

Any person may obtain a copy of this NPRM by submitting a request to the FAA, Transport Airplane Directorate, ANM–103, Attention: Rules Docket No. 93–NM–107–AD, 1601 Lind Avenue, SW., Renton, Washington 98055–4056.

Discussion

The Rijksluchtvaartdienst (RLD), which is the airworthiness authority for the Netherlands, recently notified the FAA that an unsafe condition may exist on certain Fokker Model F28 Mark 0100 series airplanes. The RLD advises that there has been a recent report of a loss of braking incident on an in-service airplane, which was caused by two mechanical ground/flight microswitches

that froze while in the flight position. During landing, the crew could not apply braking action below 40 miles per hour (MPH). When the anti-skid system ON/OFF switch was turned off, the anti-skid system touchdown protection was deactivated, and the airplane was finally brought to a full stop. This condition, if not corrected, could result in loss of braking below 40 MPH, when the anti-skid system is activated.

Fokker has issued Service Bulletin SBF100–32–060, dated October 20, 1992, that describes procedures for replacement of the existing left- and right-hand ground/flight microswitches with new, improved microswitches at the main landing gear (MLG) downlock, temperature sensor, and anti-skid harness positions. These improved microswitches have better moisture protection, and are less likely to freeze while in the flight position. The service bulletin also describes procedures for installation of an anti-skid system ON/OFF switch in the flight compartment, for certain airplanes. This switch will enable the crew to select anti-skid OFF, in the event that the brakes do not work below 40 MPH. The RLD classified this service bulletin as mandatory and issued Netherlands Airworthiness Directive 92–122, dated October 23, 1992, in order to assure the continued airworthiness of these airplanes in the Netherlands.

This airplane model is manufactured in the Netherlands and is type certificated for operation in the United States under the provisions of Section 21.29 of the Federal Aviation Regulations and the applicable bilateral airworthiness agreement. Pursuant to this bilateral airworthiness agreement, the RLD has kept the FAA informed of the situation described above. The FAA has examined the findings of the RLD, reviewed all available information, and determined that AD action is necessary for products of this type design that are certificated for operation in the United States.

Since an unsafe condition has been identified that is likely to exist or develop on other airplanes of the same type design registered in the United States, the proposed AD would require replacement of the existing left- and right-hand ground/flight microswitches with new, improved microswitches at the MLG downlock, temperature sensor, and anti-skid harness positions. The proposed NPRM would also require installation of an anti-skid system ON/OFF switch in the flight compartment, for certain airplanes. The actions would be required to be accomplished in accordance with the service bulletin described previously.

The FAA estimates that 14 airplanes of U.S. registry would be affected by this proposed AD, that it would take approximately 113 work hours per airplane to accomplish the proposed actions, and that the average labor rate is $55 per work hour. Required parts would cost approximately $1,800 per airplane. Based on these figures, the total cost impact of the proposed AD on U.S. operators is estimated to be $112,210, or $8,015 per airplane. This total cost figure assumes that no operator has yet accomplished the proposed requirements of this AD action.

The regulations proposed herein would not have substantial direct effects on the States, on the relationship between the national government and the States, or on the distribution of power and responsibilities among the various levels of government. Therefore, in accordance with Executive Order 12612, it is determined that this proposal would not have sufficient federalism implications to warrant the preparation of a Federalism Assessment.

For the reasons discussed above, I certify that this proposed regulation (1) is not a "major rule" under Executive Order 12291; (2) is not a "significant rule" under the DOT Regulatory Policies and Procedures (44 FR 11034, February 26, 1979); and (3) if promulgated, will not have a significant economic impact, positive or negative, on a substantial number of small entities under the criteria of the Regulatory Flexibility Act. A copy of the draft regulatory evaluation prepared for this action is contained in the Rules Docket. A copy of it may be obtained by contacting the Rules Docket at the location provided under the caption **ADDRESSES.**

List of Subjects in 14 CFR Part 39

Air transportation, Aircraft, Aviation safety, Safety.

The Proposed Amendment

Accordingly, pursuant to the authority delegated to me by the Administrator, the Federal Aviation Administration proposes to amend 14 CFR part 39 of the Federal Aviation Regulations as follows:

PART 39—AIRWORTHINESS DIRECTIVES

1. The authority citation for part 39 continues to read as follows:

Authority: 49 U.S.C. App. 1354(a), 1421 and 1423; 49 U.S.C. 106(g); and 14 CFR 11.89.

§ 39.13 [Amended]

2. Section 39.13 is amended by adding the following new airworthiness directive:

Fokker: Docket 93–NM–107–AD.

Applicability: Model F28 Mark 0100 series airplanes; serial numbers 11244 through 11265 inclusive, 11268 through 11283 inclusive, 11286, 11289, 11291, 11293, 11295, 11297, 11300, and 11303; certificated in any category.

Compliance: Required as indicated, unless accomplished previously. To prevent loss of braking below 40 miles per hour, when the anti-skid system is activated, accomplish the following:

(a) For all airplanes: Within 3 months after the effective date of this AD, replace the existing Dowty Electronics left- and right-hand ground/flight microswitches, part number 620602801, issue 1, with new, improved microswitches, part number 620602801, issue 2, at the main landing gear (MLG) downlock, temperature sensor, and anti-skid harness positions, in accordance with Fokker Service Bulletin SBF100–32–060, dated October 20, 1992.

(b) For airplanes having serial numbers 11244 through 11265 inclusive, 11268 through 11275 inclusive, 11277, and 11279: Within 12 months after the effective date of this AD, install an anti-skid system ON/OFF switch in the flight compartment in accordance with Fokker Service Bulletin SBF100–32–060, dated October 20, 1992.

(c) As of the effective date of this AD, no person shall install a Dowty Electronics left- and/or right-hand ground/flight microswitch, part number 620602801, issue 1, on any airplane.

(d) An alternative method of compliance or adjustment of the compliance time that provides an acceptable level of safety may be used if approved by the Manager, Standardization Branch, ANM–113, FAA, Transport Airplane Directorate. Operators shall submit their requests through an appropriate FAA Principal Maintenance Inspector, who may add comments and then send it to the Manager, Standardization Branch, ANM–113.

Note: Information concerning the existence of approved alternative methods of compliance with this AD, if any, may be obtained from the Standardization Branch, ANM–113.

(e) Special flight permits may be issued in accordance with FAR 21.197 and 21.199 to operate the airplane to a location where the requirements of this AD can be accomplished.

Issued in Renton, Washington, on August 26, 1993.

David G. Hmiel,

Acting Manager, Transport Airplane Directorate, Aircraft Certification Service.

[FR Doc. 93–21220 Filed 8–31–93; 8:45 am]

BILLING CODE 4910–13–P

DEPARTMENT OF THE TREASURY

Bureau of Alcohol, Tobacco and Firearms

27 CFR Part 5

[Notice No. 780; Re: T.D. AFT-348, T.D. ATF-333, T.D. ATF-319, T.D. ATF-311, T.D. ATF-306; Notice Nos. 716, 583, 410, 403; 91F009P]

RIN 1512-AA10

Alteration of Class and Type; Vodka

AGENCY: Bureau of Alcohol, Tobacco and Firearms (AFT), Treasury.

ACTION: Notice of proposed rulemaking.

SUMMARY: The Bureau of Alcohol, Tobacco and Firearms (ATF) is proposing to amend regulations authorizing the use of a trace amount (defined as up to 300 milligrams per liter or 300 ppm) of citric acid in the production of vodka, without changing its designation as vodka. Because citric acid is not an essential component of vodka, ATF is proposing to amend the regulations on additions of substances to distilled spirits, rather than the regulations on the standard of identity of vodka. Under this proposal, vodka made with a greater concentration of citric acid would be designated "flavored vodka" or labeled with a fanciful name.

DATES: Comments must be received on or before October 18, 1993.

ADDRESSES: Send written comments to: Chief, Wine and Beer Branch, Bureau of Alcohol, Tobacco and Firearms, P.O. Box 50221, Washington, DC 20091-0221, ATTN: Notice No. 780. Comments not exceeding three pages may be submitted by facsimile transmission to (202) 927-8602.

FOR FURTHER INFORMATION CONTACT: David W. Brokaw, wine and Beer Branch, Bureau of Alcohol, Tobacco and Firearms, 650 Massachusetts Avenue, NW., Washington, DC 20226, (202) 927-8230.

SUPPLEMENTARY INFORMATION:

Background

On December 4, 1990, ATF issued T.D. ATF-306, (55 FR 49994) which amended 27 CFR 5.23(a)(3) to authorize the use of up to 2 grams per liter (2000 parts per million (ppm)) of sugar, and a trace amount (defined as 150 milligrams per liter or 150 ppm) of citric acid in the production of vodka. ATF believed at that time that the 150 ppm threshold was sufficient to neutralize residual alkalinity derived from the charcoal treatment of some vodkas, or from the use of certain glass in manufacturing bottles. In addition, ATF's laboratory conducted tests which determined that 150 ppm was approximately the threshold at which the presence of citric acid could be detected. As a result, T.D. ATF-306 concluded that vodka treated with no more than 150 ppm of citric acid would still fall within the standard of identity for vodka. The standard of identity is defined in 27 CFR 5.22(a)(1) as "neutral spirits so distilled or so treated after distillation with charcoal or other materials, as to be without distinctive character, aroma, taste or color." T.D. ATF-306 was effective January 3, 1991, with a formula and label cancellation date of March 4, 1991, for products not made within the limitations of the Treasury decision.

Petition

On March 4, 1991, ATF issued T.D. ATF-311 (56 FR 8922) which deferred the compliance date with respect to the citric acid limitation set forth in 27 CFR 5.23(a)(3)(ii) by T.D. ATF-306 to December 4, 1991. The compliance date set forth in T.D. ATF-306 regarding maximum levels for the use of sugar in vodka remains unchanged. T.D. ATF-311 was issued in response to a petition from Heublein, Inc. (Heublein), for reconsideration of T.D. ATF-306. Heublein's petition was based on a representation that new scientific information and data not previously available had come to their attention concerning maximum levels for the use of citric acid in vodka.

Notice No. 716

On April 29, 1991, ATF issued Notice No. 716 (56 FR 19623) to gather additional information with respect to the 150 ppm limitation set forth in T.D. ATF-306. Notice No. 716 was issued in conjunction with Heublein's request for reconsideration which was granted in T.D. ATF-311. Notice No. 716 proposed to retain the reasoning and conclusion of T.D. ATF-306 as set forth above. The purpose of the Notice was to solicit comments from the public and industry concerning the appropriateness of sensory threshold citric acid levels higher and lower than the proposed maximum level of 150 ppm.

Comments on Notice No. 716

In response to Notice No. 716, ATF received nine comments. All of the comments were opposed to setting a maximum limitation as low as 150 ppm for the addition of citric acid to vodka. These comments were provided by: David Sherman Corp. (no limit should be established); Brown-Forman Corp. (500 ppm limit proposed, no substantiating data submitted); Joseph E. Seagram & Sons, Inc. (150 ppm is too low, no other level or substantiating data submitted); McCormick Distilling Co. (supports Heublein data, no other level or substantiating data submitted); Jim Beam Brands Co. (level could be set as high was 630 ppm, no substantiating data submitted); Distilled Spirits Council of the United States (opposes 150 ppm, no other level or substantiating data submitted); Glenmore Distillers Co. (500 ppm level proposed, no substantiating data submitted); and National Association of Beverage Importers, Inc. (supports Heublein data, no other level or substantiating data submitted).

Heublein's Test

The only commenter submitting sensory (taste and small) test data from independent contractors was Heublein. On July 29, 1991, Heublein submitted results of testing conducted by nine companies on their behalf. The purpose of these tests was to determine whether a statistically significant difference could be detected between two levels of citric acid in vodka. These tests were not designed to determine the minimum level at which a majority of people could detect the presence of citric acid in vodka. For example, if a panel was asked to determine whether there was a difference between 1000 ppm and 1110 ppm of citric acid, the statistical analysis of the results of such testing would only show whether the panelist can reliably distinguish between the two samples but would not generate any information concerning the threshold level at which citric acid could be detected by a statistical minority of people. Heublein's study concluded that a change in the level of citric acid in vodka from 150 ppm to 480 ppm would not be detected by a majority of people but that a change from 150 ppm to 528 ppm would be detected by a majority of people.

Independent Testing

During the comment period, ATF secured on outside testing firm, Odor Science and Engineering (OS&E), to conduct independent testing on sensory threshold levels for citric acid addition to vodka. The outside testing firm was secured in order to provide data for comparison to the results secured by ATF and industry members.

OS&E was requested to conduct a test which would produce results with respect to the taste threshold of citric acid in vodka. The initial tests were conducted on April 25 and 29, 1991. Various concentrations of ethanol solution and citric acid were presented to a taste panel comprised of ten

experienced sensory panelists familiarized with the taste of the ethanol solutions. The initial ethanol solutions were supplied to OS&E by ATF and consisted of 40 percent ethanol in water (80 proof). The flasks were stoppered to prevent any opportunity of interference because of odor perception. The initial levels of citric acid in the various ethanol solutions were: 50 ppm, 100 ppm, 150 ppm, 200 ppm, and 1000 ppm.

The presentations consisted of two flasks containing only ethanol solution and one flask containing ethanol solution mixed with one of the levels of citric acid described above. One panelist at a time entered the sensory laboratory and tested each of the three flasks. Each of the panelists tasted each of the three flasks and indicated to the panel moderator which of the three samples was different, thus requiring the panelist to guess if he or she expressed uncertainty. This procedure is known as the forced-choice ascending method and was repeated for each of the citric acid concentrations described above. The forced-choice ascending method is stacked against guessing which sample contains the citric acid because two out of three choices do not contain citric acid.

As results of the initial trials were inconclusive, repeat trials were conducted with eleven panelists using citric acid concentrations of 100 ppm, 250 ppm, and 500 ppm. However, as with the initial tests, the ethanol solution had a pronounced anesthetic effect which precluded accurate determinations of taste thresholds. As a result, the ethanol solution was diluted to 20 percent ethanol in water (40 proof) and three concentrations of citric acid in the diluted solution were evaluated: 25 ppm, 50 ppm, and 500 ppm. The anesthetic effect discussed above was presumably eliminated because all of the panelists detected taste differences at lower concentrations of citric acid.

An additional test was run on May 28, 1991, using twelve panelists in order to develop more representative data using a 20 percent ethanol in water (40 proof) solution. The concentrations of citric acid in the diluted solution were 25 ppm, 50 ppm, 100 ppm, 200 ppm, and 400 ppm. The threshold of citric acid in vodka could then be determined using the forced-choice ascending concentration method. OS&E concluded that a majority of people could detect the presence of citric acid in vodka at a level of approximately 180 ppm.

However, such test results collected by OS&E were not calculated in accordance with the methodology prescribed by the American Society for Testing and Materials (ASTM). ASTM Procedure E–679 is entitled "Standard Practice for Determination of Odor and Taste Thresholds By a Forced-Choice Ascending Concentration Series Method of Limits." This method requires use of a geometric progression of concentrations, ie., each concentration of citric acid is a factor or multiple of the previous concentration. In this test, the factor was two. In order to calculate the mean of such a progression, one must take the geometric mean. This is calculated by taking the nth root of the product of the numbers. This differs from the familiar arithmetic mean which is found by dividing the sum of the numbers by n. In both cases, n is the number of values under consideration.

Disparity in Test Results

Heublein was provided with the opportunity to comment on the data secured on behalf of ATF by OS&E. Heublein acknowledged the discrepancies in the OS&E report in their comments to ATF when they stated that "we were unable to reproduce some * * * values in the report." Nevertheless, Heublein used the incorrect OS&E calculations and submitted to ATF that the level at which the majority of people could detect citric acid in vodka is 734 ppm.

A significant disparity existed between the methodologies of the studies done by ATF and Heublein, and the conclusions reached by Heublein and OS&E with respect to the study conducted by OS&E. Based on these disparities, ATF concluded that more time would be needed to properly evaluate the sensory tests and results derived from Heublein and the outside firm hired by ATF. The compliance date of December 4, 1991, with respect to citric acid, set forth in T.D. ATF–311 was subsequently deferred to September 3, 1992, by T.D. ATF–319 (56 FR 63398, December 3, 1991) in order to allow for time to resolve the disparity in the test results. As ATF had not yet completed its review of all data submitted relative to the citric acid limitation as of September 3, 1992, ATF issued T.D. ATF–333 (57 FR 40323, September 3, 1992), which deferred the compliance date with respect to the citric acid limitation set forth in 27 CFR 5.23(a)(3)(ii) until September 3, 1993.

ATF Analysis of Independent Test Data

The ATF laboratory used the data generated by OS&E and recalculated the results according to the approved ASTM method. The detection threshold of citric acid in vodka was determined using the best-estimate criterion, or the group geometric mean of all the panelists' thresholds. Each panelist's threshold is the geometric mean of the last missed concentration (the last concentration of citric acid not detected) and the next higher concentration. This kind of analysis is considered most reliable when most of the panelists have at least two hits in a row at the high concentration end. For those panelists who have a miss at the highest concentration, it is assumed that they would have had a hit at the next higher concentration had there been one more sample in the series (800 ppm citric acid for this test). For those panelists who have no misses, it is assumed that, had the testing begun one sample lower in the series (12.5 ppm citric acid for this test), they would have missed it.

For normally distributed data, half of the population lies on each side of the center of the data curve. Using the OS&E data, the ATF laboratory determined that two-thirds of the population lies within the range of citric acid concentrations between 202 ppm and 700 ppm and one-sixth lies outside this region in each tail of the distribution. As a normal distribution did not exist, the geometric mean would not yield as accurate a measure of where most people would detect the presence of citric acid in vodka as the median, or the middle point of the distribution ordered from lowest point to highest point. The ATF laboratory also utilized the OS&E data to determine that the actual range of concentrations of citric acid that would include two-thirds of the population results in a geometric mean of 376 ppm and a range of 202 ppm to 700 ppm at 40 percent alcohol or 80 proof. The results of the OS&E testing also show that a majority of the panelists would be able to detect citric acid at the median level of 282 ppm in 80 proof vodka. The median level of 282 ppm is significantly lower than either the group geometric mean of 376 ppm or the 734 ppm level determined by Heublein.

The citric acid level of 734 ppm proposed by Heublein would be the concentration at which greater than two-thirds of the population would detect the presence of citric acid in vodka. In addition, the tests performed by the Heublein independent laboratories were designed to determine whether there is a detectable difference between two solutions of different concentrations of citric acid in vodka, not whether citric acid is present. Accordingly, ATF does not believe that the Heublein independent lab tests are germane to the issue of setting a level of citric acid that will not be in conflict with the current standard of identity for vodka which defines the product as being without

distinctive character, aroma, taste, or color. Indeed, ATF believes that the use of a level of citric acid which greater than two-thirds of the population could detect is inconsistent with the above-stated standard of identity for vodka. ATF believes instead that it is in the interest of preserving the standard of identity for vodka that any statistical treatment be applied in the opposite direction, i.e., where most of the population would not detect the presence of citric acid.

Proposed Regulatory Change

After analyzing all of the data, ATF believes that the highest permitted level of citric acid in vodka should be the median level of 282 ppm found by applying the ASTM method to the OS&E test data. However, ATF is proposing to set a level of 300 ppm citric acid in vodka in order to facilitate regulatory administration and consumer understanding.

ATF Therefore proposes to amend 27 CFR 5.23(a)(3)(ii) authorizing the use of a trace amount (defined as up to 300 milligrams per liter or 300 ppm) of citric acid in the production of vodka, without changing its designation as vodka. Because citric acid is not an essential component of vodka, ATF is proposing to amend 27 CFR 5.23 which regulates additions of substances to distilled spirits, rather than 27 CFR 5.22(a)(1) which is the standard of identity of vodka. Under this proposal, vodka made with a greater concentration of citric acid would be designated "flavored vodka" or labeled with a fanciful name under 27 CFR part 5.

On August 27, 1993, ATF issued T.D. ATF–348 (58 FR 45251) deferring the compliance date set forth in T.D. ATF–333 until August 28, 1995 with respect to the citric acid limitation set forth in 27 CFR 5.23(a)(3)(ii) by T.D. ATF–306. The two year compliance date deferral is necessary in order to allow ATF to analyze the comments received during the comment period and to allow for additional unforeseen contingencies.

Public Participation-Written Comments

ATF requests comments from all interested parties. ATF is particularly interested in comments concerning the sensory threshold citric acid levels of vodka (the level at which vodka would be without distinctive character, aroma, taste, or color to a majority of people.) In that regard, ATF is interested in comments concerning citric acid levels higher or lower than the proposed maximum level of 300 ppm. Also, ATF is interested in comments concerning the methodology and results of the studies conducted by Heublein and OS&E, as well as ATF's interpretation of the same.

Comments received on or before the closing date will be carefully considered. Comments received after that date will be given the same consideration if it is practical to do so. However, assurance of consideration can only be given to comments received on or before the closing date.

ATF will not recognize any submitted material as confidential and comments may be disclosed to the public. Any material which the commenter considers to be confidential or inappropriate for disclosure to the public should not be included in the comments. The name of the person submitting a comment is not exempt from disclosure.

Comments may be submitted by facsimile transmission to (202) 927–8602, provided the comments: (1) Are legible; (2) are 8½" × 11" size, (3) contain a written signature, and (4) are three pages or less in length. This limitation is necessary to assure reasonable access to the equipment. Comments sent by FAX in excess of three pages will not be accepted. Receipt of FAX transmittals will not be acknowledged. Facsimile transmitted comments will be treated as originals.

Any persons who desires an opportunity to comment orally at a public hearing on the proposed regulation should submit his or her request, in writing, to the Director within the 45-day comment period. The Director, however, reserves the right to determine, in light of all circumstances, whether a public hearing will be held.

Regulatory Flexibility Act

It is hereby certified that this document will not have a significant economic impact on a substantial number of small entities. Any benefit derived by a small proprietor from the new options provided in this rule will be the result of the proprietor's own promotional efforts and consumer acceptance of the specific product. No new reporting, recordkeeping or other administrative requirements are imposed by this rule. Accordingly, a regulatory flexibility analysis is not required.

Executive Order 12291

It has been determined that this document is not a major regulation as defined in E.O. 12291 and a regulatory impact analysis is not required because it will not have an annual effect on the economy of $100 million or more; it will not result in a major increase in costs or prices for consumers, individual industries, Federal, State, or local government agencies or geographical regions; and it will not have significant adverse effects on competition, employment, investment, productivity, innovation, or on the ability of United States-based enterprises to compete with foreign-based enterprises in domestic or export markets.

Paperwork Reduction Act

The provisions of the Paperwork Reduction Act of 1980, Pub. L. 96–511, 44 U.S.C. chapter 35, and its implementing regulations, 5 CFR part 1320, do not apply to this notice because no requirement to collect information is proposed.

Disclosure

Copies of this notice, the independent study commissioned by ATF, the report of the ATF laboratory interpreting the study, and any written comments will be available for public inspection during normal business hours at: ATF Public Reading Room, room 6480, 650 Massachusetts Avenue, Washington, DC 20226.

Drafting Information

The principal author of this document is David W. Brokaw, Wine and Beer Branch, Bureau of Alcohol, Tobacco and Firearms.

List of Subjects in 27 CFR Part 5

Advertising, Consumer protection, Customs duties and inspection, Imports, Labeling, Liquors, Packaging and containers.

Authority and Issuance

27 CFR Part 5—Labeling and Advertising of Distilled Spirits, is amended as follows:

PART 5—LABELING AND ADVERTISING OF DISTILLED SPIRITS

Paragraph 1. The authority citation for 27 CFR part 5 continues to read as follows:

Authority: 26 U.S.C. 5301, 7805, 27 U.S.C. 205.

Par. 2. Section 5.23(a)(3)(ii) is revised to read as follows:

§ 5.23 Alteration of class and type.

(a) *Additions.* * * *

* * * * *

(3) * * * (ii) any material whatsoever in the case of neutral spirits or straight whiskey, except that vodka may be treated with sugar in an amount not to exceed 2 grams per liter, and with citric acid in an amount not to exceed 300 milligrams per liter; or

* * * * *

Signed: July 30, 1993.
Stephen E. Higgins,
Director.

Approved: August 17, 1993.
Ronald K. Noble,
Assistant Secretary (Enforcement).
[FR Doc. 93–21246 Filed 8–31–93; 8:45 am]
BILLING CODE 4810–31–M

DEPARTMENT OF TRANSPORTATION

Coast Guard

33 CFR Part 162

[CGD 93–016]

RIN 2115–AE48

Ambrose Channel Navigation Restrictions

AGENCY: Coast Guard, DOT.

ACTION: Notice of proposed rulemaking.

SUMMARY: The Coast Guard is proposing to delete the Ambrose Channel, Lower New York Bay inland waterways navigation regulation (33 CFR 162.25). The regulation has become outdated and no longer serves a useful safety purpose. In addition, the navigation restrictions have proven to be an administrative burden for the mariner and the Coast Guard.

DATES: Comments must be received on or before October 18, 1993.

ADDRESSES: Comments may be mailed to the Executive Secretary, Marine Safety Council (G–LRA/3406) (CDG 93–016), U.S. Coast Guard Headquarters, 2100 Second Street SW., Washington, DC 20593–0001, or may be delivered to room 3406 at the same address between 8 a.m. and 3 p.m., Monday through Friday, except Federal holidays. The telephone number is (202) 267–1477.

The Executive Secretary maintains the public docket for this rulemaking. Comments will become part of this docket and will be available for inspection or copying at room 3406, U.S. Coast Guard Headquarters.

FOR FURTHER INFORMATION CONTACT: Irene Hoffman, Project Manager, Vessel Traffic Services Division. The telephone number is 202–267–6277.

SUPPLEMENTARY INFORMATION:

Request for Comments

The Coast Guard encourages interested persons to participate in this rulemaking by submitting written data, views, or arguments. Persons submitting comments should include their names and addresses, identify this rulemaking (CGD 93–016) and the specific section of this proposal to which each comment applies, and give the reason for each comment. The Coast Guard requests that all comments and attachments be submitted in an unbound format suitable for copying and electronic filing. If not practical, a second copy of any bound material is requested. Persons wanting acknowledgment of receipt of comments should enclose a stamped, self-addressed postcard or envelope.

The Coast Guard will consider all comments received during the comment period, and may change this proposal in view of the comments.

The Coast Guard plans no public hearing. Persons may request a public hearing by writing to the Marine Safety Council at the address under ADDRESSES. The request should include reasons why a hearing would be beneficial. If it determines that the opportunity for oral presentations will aid this rulemaking, the Coast Guard will hold a public hearing at a time and place announced by a later notice in the **Federal Register.**

Drafting Information

The principal persons involved in drafting this document are Irene Hoffman, Project Manager, Vessel Traffic Services Division and Mr. Nicholas Grasselli, Project Counsel, Office of Chief Counsel.

Background and Purpose

The Ambrose Channel navigation restriction was originally established by an order issued by the United States Army Corps of Engineers on March 28, 1924. As published on September 29, 1977 (42 FR 51758), the Coast Guard assumed responsibility for this navigational restriction.

At present, this navigation regulation restricts the use of Ambrose Channel to certain vessels. The class of vessels that are prohibited from transiting the channel are those vessels not under sufficient power and control, sailing vessels, and other vessels engaged in towing. However, sailing vessels and other vessels engaged in towing may obtain permission to navigate the channel from Vessel Traffic Service New York (VTSNY).

These navigation restrictions have become outdated due to numerous channel improvements. The Ambrose Channel was widened to 2000 feet, dredged to over 45 feet in depth, and is well marked. It is the main channel and the only practical access to or egress from the Port of New York. It is heavily traveled, but not congested. By removing the navigation restriction for certain vessels in Ambrose Channel, the level of vessel safety would not be diminished. In addition, requiring sailing and towing vessels to obtain prior approval and a transit permit from VTSNY for entry and exit has proven to be an administrative burden to the mariner and the Coast Guard.

Discussion of Proposed Amendments

The Coast Guard is proposing to remove the Ambrose Channel, Lower New York Bay navigation restrictions (33 CFR 162.25). This proposal would lift navigation restrictions prohibiting certain vessels from navigating within the channel, as well as removing requirements for sailing and towing vessels to acquire prior transit approval from VTSNY. The Coast Guard believes that eliminating these restrictions should not have an adverse impact on navigation safety.

Regulatory Evaluation

This proposal is not major under Executive Order 12291 and not significant under "Department of Transportation Regulatory Policies and Procedures" (44 FR 11034; February 26, 1979). The Coast Guard expects the economic impact of this proposal to be so minimal that a full Regulatory Evaluation is unnecessary. The removal of the Ambrose Channel navigation regulations will have no foreseeable economic impact.

Small Entities

Under the Regulatory Flexibility Act (5 U.S.C. 601 *et seq.*), the Coast Guard must consider whether this proposal will have significant economic impact on a substantial number of small entities. "Small entities" include independently owned and operated small businesses that are not dominant in their field and that otherwise qualify as "small business concerns" under section 3 of the Small Business Act (15 U.S.C. 632). Because it expects the impact of this proposal to be minimal, the Coast Guard certifies under 5 U.S.C. 605(b) that this proposal, if adopted will not have a significant economic impact on a substantial number of small entities.

Collection of Information

This proposal contains no collection of information requirements under the Paperwork Reduction Act (44 U.S.C. 3501 *et seq.*). It will remove the requirement for certain vessels to obtain Coast Guard approval to transit the Ambrose Channel.

Federalism

The Coast Guard has analyzed this proposal in accordance with the principles and criteria contained in

Executive Order 12612 and has determined that this proposal does not have sufficient federalism implications to warrant the preparation of a Federalism Assessment.

Enviroment

The Coast Guard considered the environmental impact of this proposal and concluded that, under section 2.B.2 (c) and (1) of Commandant Instruction M16475.1B, this proposal is categorically excluded from further environmental documentation. The deletion of the Ambrose Channel Regulation will not affect the environment or vessel safety. A Categorical Exclusion Determination is available in the docket for inspection or copying where indicated under ADDRESSES.

List of Subjects in 33 CFR Part 162

Navigation (water), Waterways.

For the reasons set out in the preamble, the Coast Guard proposes to amend 33 CFR part 162 as follows:

PART 162—INLAND WATERWAYS NAVIGATION REGULATIONS

1. The authority citation for part 162 continues to read as follows:

Authority: 33 U.S.C. 1231; 49 CFR 1.46.

§ 162.25 [Removed]

2. Section 162.25 is removed.

Dated: August 27, 1993.

W.J. Ecker,

Rear Admiral, U.S. Coast Guard, Chief, Office of Navigation Safety and Waterway Services.

[FR Doc. 93-21305 Filed 8-31-93; 8:45 am]

BILLING CODE 4910-14-M

ENVIRONMENTAL PROTECTION AGENCY

40 CFR Part 123

[FRL-4700-2]

Water Pollution Control; Application by South Dakota To Administer the National Pollutant Discharge Elimination System (NPDES) Program

AGENCY: Environmental Protection Agency (EPA).

ACTION: Notice of application, public comment period, and public hearings.

SUMMARY: The State of South Dakota has submitted an application to EPA to administer and enforce the NPDES program for regulating discharges of pollutants into waters within the State. According to the State's proposal, the NPDES program would be administered by the South Dakota Department of Environment and Natural Resources (SDDENR).

The application from South Dakota is complete and is available for inspection and copying. Public comments are requested, and public hearings will be held.

DATES: Comments must be received on or before October 8, 1993. Public hearings have been scheduled for September 27, 1993, from 3 p.m. to 5 p.m. (CDT) and from 7 p.m. to 9 p.m. (CDT) at the Matthew Training Center, Joe Foss Building; 523 East Capitol; Pierre, South Dakota 57501.

ADDRESSES: Janet LaCombe, NPDES Branch, (8WM-C); U.S.E.P.A., Region VIII; Denver Place, 999 18th Street, suite 500; Denver, CO 80202-2466.

FOR FURTHER INFORMATION CONTACT: Janet LaCombe at (303) 293-1593.

SUPPLEMENTARY INFORMATION: Section 402 of the Clean Water Act (CWA), 33 U.S.C. Section 1342, created the NPDES program, allowing EPA to issue permits for the discharge of pollutants into waters of the United States under conditions required by the CWA. Section 402(b) of the CWA provides that a state may submit an application to EPA for administering its own program for issuing NPDES permits within its jurisdiction. EPA is required to approve each such submitted state program unless EPA determines that the program does not meet the requirements of sections 304(i) and 402(b) of the CWA or the EPA regulations implementing those sections.

South Dakota's application for NPDES program approval contains a letter from the Governor requesting NPDES program approval, a Program Description, an Attorney General's Statement, copies of pertinent State statutes and regulations, and a Memorandum of Agreement (MOA) to be executed by the Regional Administrator, Region VIII, EPA, and the Secretary of the SDDENR.

Under 40 CFR 403.10(f)(1)(i) and 403.3(j), an approved state program must have the authority to require industrial users to comply with pretreatment standards for specific industrial subcategories, as established by EPA regulations in 40 CFR, chapter I, subchapter N, "Effluent Guidelines and Standards". When South Dakota submitted its proposed program to EPA, Subchapter N had not been incorporated into the State program. However, incorporation was approved at the July 28, 1993, public hearing of South Dakota Water Management Board and is expected to become effective on September 5, 1993, prior to EPA's approval or disapproval of the State submittal. Incorporation of categorical pretreatment standards must be fully effective before EPA can approve the program.

On the following three items, EPA specifically requests public comment:

(1) *Unsigned Complaints from the General Public.*

South Dakota Codified Law (SDCL) Section 34A-2-111 prohibits the SDDENR from performing inspections or taking other actions pursuant to SDCL Sections 34A-2-40, 34A-2-44, and 34A-2-45, such as sampling effluents, entering premises of dischargers, or otherwise ensuring compliance with Chapter 34A-2, as a result of, or based on, a complaint or the provision of information from the general public, unless the person making the complaint or providing the information signs a complaint. Signed complaints are to be kept confidential.

Section 402(b)(2)(B) of the CWA requires an authorized state program to have authority to inspect, monitor, enter, and require reports to at least the same extent as required by section 308 of the CWA. Section 402(b)(7) of the CWA requires an authorized state program to have adequate authority to abate violations of permits or the permit program through penalties and other means of enforcement. 40 CFR 123.26(b)(3) and (4) require an authorized state program to maintain a program for investigating information regarding violations of applicable program and permit requirements, to maintain procedures for receiving and ensuring proper consideration of information submitted by the public about violations of applicable program and permit requirements, to encourage public efforts in reporting violations, and to make available information on reporting procedures.

The MOA (page 7) currently provides, in part:

> The SDDENR will investigate and respond to all citizen complaints where a signed complaint form has been received and will investigate all complaints received from other government agencies. At the time an unsigned complaint is received, SDDENR will determine whether appropriate department authorities exist under any state environmental statute to handle the unsigned complaint. If not, the citizen shall be referred to Emergency and Disaster Services; Game, Fish & Parks or another appropriate State agency.

EPA has asked South Dakota for an additional explanation of how the State would handle unsigned citizen complaints. To confirm EPA's understanding of how the proposed State program would operate, EPA has requested that South Dakota add the

following sentence to the MOA: "The appropriate State agencies shall receive anonymous complaints and either investigate under their authorities or sign and refer the complaint to SDDENR."

It is EPA's interpretation that the appropriate State agency investigates or becomes the complainant. In the latter case, EPA believes that enforcement authority will be ensured by having the SDDENR follow through with the investigation and response. EPA has also informed South Dakota that, at a minimum, all agencies other than the SDDENR that are referred to in the MOA should become signatories to the MOA. Alternatively, the Governor could sign the MOA, or the State could develop an appropriate internal agreement among its agencies.

In addition, for South Dakota, EPA will maintain an "800" number to receive information from persons who do not wish either to sign a complaint or to contact another State agency as outlined above.

EPA requests public comment regarding the effectiveness of this approach; the effect, if any, on public efforts to report violations; and the effect, if any, on compliance and enforcement activities in the South Dakota NPDES program.

(2) *Certain Penalty Authorities for Unpermitted Facilities.*

40 CFR section 123.27(a)(3)(i) provides that an approved state program is to have the authority to recover civil penalties for the violation of "any NPDES filing requirement" and "any duty to allow or carry out inspection, entry or monitoring activities," as well as for the violation of any NPDES permit condition or any regulation or order issued by the state program director. The Attorney General's Statement (pages 20–22) addresses this issue as follows:

> The State does not have direct statutory authority to collect civil penalties, or criminally enforce, a failure to comply with SDCL 34A–2–44 (record-keeping), 34A–2–45 and –46 (inspection authorities), due to a lack of citation to SDCL 34A–2–75 (penalty provision) in these sections. However, because the Department [of Environment and Natural Resources] can prosecute (both civilly and criminally) violations of permit conditions and because it can set permit conditions for recording, reporting, monitoring, entry, and inspection under 34A–2–40, it therefore can enforce these statutes. The Department can, with regard to unpermitted facilities, obtain both the records and entry for inspections pursuant to search warrants issued on the basis of the criminal provisions of SDCL 34A–2–75 and the violation of SDCL 34A–2–36 (operating without the required permit). Civil penalties for failure to comply with SDCL 34A–2–44, –45, and –46 by an unpermitted facility are available only through violation of an order issued by the Department pursuant to SDCL 34A–2–53. The process for issuing an order under SDCL 34A–2–53 for violations by unpermitted facilities can be issued in a timely fashion; if necessary, within the same day. In addition, an administrative search warrant under the DENR's inspection authority of SDCL 34A–2–45 and –46, could be obtained to immediately permit access to a facility.
>
> Penalties for the underlying violations, such as operating without a permit, accrue during the time period of appeal of the Secretary's order and are payable at the conclusion of the appeal process. Penalties for violations of the Secretary's order are suspended until the Board makes its finding on the appeal of the Secretary's order. SDCL 34A–2–53, –54, –55, –56, –60, –64. Further appeal does not suspend the order or the penalties.

EPA requests public comment regarding the effectiveness of this approach in implementing the State's information collecting authorities.

(3) *Citizen Intervention in Enforcement Actions. 40 CFR 123.27(d) provides:*

Any State administering a program shall provide for public participation in the State enforcement process by providing either:

> (1) Authority which allows intervention as of right in any civil or administrative action * * * by any citizen having an interest which is or may be adversely affected; or
>
> (2) Assurance that the State agency or enforcement authority will (i) Investigate and provide written responses to all citizen complaints * * * (ii) Not oppose intervention by any citizen when permissive intervention may be authorized * * *; and (iii) Publish notice of and provide at least 30 days for public comment on any proposed settlement of a State enforcement action.

The South Dakota Attorney General's Statement (pages 28–30) indicates that citizens have the right to intervene in administrative enforcement actions pursuant to SDCL section 34A–10–2. It states that any citizen who is denied intervenor status in an administrative proceeding may file a circuit court action pursuant to SDCL section 34A–10–5 to have the court order the citizen to be named as a party to the administrative proceedings. As to judicial actions, SDCL 15–6–2(a) provides for citizen intervention unless the interest of the citizen is adequately represented by existing parties.

The MOA (page 3) states that the SDDENR will allow intervention as of right in civil proceedings to at least the same extent required by 40 CFR section 123.27(d)(1) and shall not oppose citizen intervention in administrative proceedings as provided by 34A–10–2.

EPA requests comment regarding the effectiveness of the State's proposed approach in ensuring the opportunity for public participation in enforcement actions.

Indian Reservations. If EPA were to authorize South Dakota to administer the NPDES program as submitted, the authorization would not extend to discharges within "Indian Country" as defined in 18 U.S.C. section 1151. EPA would retain authority to issue NPDES permits for all dischargers on the following "existing or former" Indian reservation lands located in South Dakota:

1. Cheyenne River Indian Reservation
2. Crow Creek Indian Reservation
3. Flandreau Indian Reservation
4. Lower Brule Indian Reservation
5. Pine Ridge Indian Reservation
6. Rosebud Indian Reservation
7. Sisseton Indian Reservation
8. Standing Rock Indian Reservation
9. Yankton Indian Reservation.

A list of existing facilities that would remain under EPA management can be obtained free of charge from EPA, Region VIII, Water Management Division at the address provided above.

In withholding authorization for these areas, EPA is not determining that the State either has adequate jurisdiction or lacks such jurisdiction. Should South Dakota later choose to submit further analysis with regard to its general jurisdiction over "Indian Country" or with regard to its jurisdiction over specific parts of "existing or former" reservations, it may do so without prejudice.

Before EPA would be able to authorize South Dakota to administer the NPDES program for any portion of "Indian Country," the State would have to provide an appropriate analysis of the State's jurisdiction to regulate discharges in these areas, as required by 40 CFR § 123.23(b). In order for a state to satisfy the requirements of § 123.23(b), it must demonstrate to the EPA's satisfaction that it has authority either pursuant to explicit Congressional authorization or under the principles of Federal Indian law to enforce its laws against existing and potential pollution sources within any geographical area for which it seeks authorization. EPA has reason to believe that disagreement exists with regard to the State's jurisdiction over the Indian reservation areas designated above, and EPA is not satisfied at this time that the State has made an appropriate analysis with regard to these areas.

EPA's future evaluation of whether to authorize the South Dakota program to include Indian reservation lands will be

governed by EPA's judgment as to whether the State has demonstrated adequate authority to justify such approval, based upon its understanding of the relevant principles of Federal Indian law and sound administrative practice. The State may wish to consider EPA's discussion of the related issue of tribal jurisdiction found in the preamble to the Indian Water Quality Standards Regulation (see 56 FR 64876, December 12, 1991).

Availability of State Submittal

South Dakota's submittal may be reviewed by the public from 8 a.m. to 4 p.m. (CDT), Monday through Friday, excluding holidays, at the SDDENR, Joe Foss Building, 523 East Capitol, Pierre, South Dakota 57501, or at the EPA Regional Office in Denver at the address appearing earlier in this notice.

Copies of the submittal may be obtained at a cost of ten dollars ($10.00) by check payable to the South Dakota Department of Natural Resources. Requests for copies should be addressed to Kent Woodmansey, South Dakota Department of Environment and Natural Resources at the address provided above or at telephone number (605) 773–3351.

Public Hearing Procedures

The public hearings have been scheduled for the date, times, and location indicated above. The Hearing Panel will include representatives of EPA Region VIII and the SDDENR. The following policies and procedures will be observed: The Presiding Officer shall conduct the hearings in a manner that permits open and full discussion of any issue involved. Any person may submit written statements or documents for the record. The Presiding Officer may, at his or her discretion, exclude oral testimony if such testimony is overly repetitious of previous testimony or is not relevant to the decision to approve, disapprove, or require revision of the submitted State program. The Presiding Officer may limit oral testimony to five minutes total per person. Members of the Hearing Panel may ask questions of witnesses and respond to questions and statements of witnesses.

The transcript taken at the hearings, together with copies of all submitted statements and documents, shall become a part of the record submitted to EPA. The hearing record shall be left open until October 8, 1993, as described below, to permit any person to submit any additional written statement or to present views or evidence tending to rebut testimony presented at the public hearing.

Hearing statements may be oral or written. Written copies of oral statements are encouraged for accuracy of the record and for the use of the Hearing Panel and other interested persons. Statements should summarize any extensive written material.

All comments or objections presented at either public hearing or received in writing by EPA Region VIII by October 8, 1993, will be considered by EPA before it takes final action on South Dakota's request for NPDES program approval.

All written comments and questions regarding the hearings or the NPDES program should be addressed to Janet LaCombe at the above address.

The public is also encouraged to bring the foregoing to the attention of persons whom may be interested in this matter.

EPA's Decision

After the close of the public comment period, EPA will decide whether to approve or disapprove South Dakota's NPDES program. The decision will be based on the requirements of sections 402 and 304(i) of the CWA and EPA regulations promulgated thereunder.

If the South Dakota NPDES program is approved, EPA will so notify the State. Notice will be published in the **Federal Register** and, as of the date of program approval, EPA will suspend issuance of NPDES permits in South Dakota (except, as discussed above, for those dischargers in "Indian Country"). The State's program will operate in lieu of the EPA-administered program. However, EPA will retain the right, among other things, to object to NPDES permits proposed to be issued by South Dakota and to take enforcement actions for violations.

If EPA disapproves South Dakota's NPDES program, EPA will notify the State of the reasons for disapproval and of any revisions or modifications to the State program that are necessary to obtain approval.

Review Under Regulatory Flexibility Act and Executive Order 12291

Under the Regulatory Flexibility Act, EPA is required to prepare a Regulatory Flexibility Analysis for all rules that may have a significant impact on a substantial number of entities. The proposed approval of the South Dakota NPDES program does not alter the regulatory control over any industrial category. No new substantive requirements are established by this action. Therefore, because this notice does not have a significant impact on a substantial number of small entities, a Regulatory Flexibility Analysis is not needed.

The Office of Management and Budget has exempted this rule from the requirements of section 3 of Executive Order 12291.

Dated: August 23, 1993.

Jack W. McGraw,

Acting Regional Administrator, Environmental Protection Agency, Region VIII.

[FR Doc. 93–20969 Filed 8–31–93; 8:45 am]

BILLING CODE 6560–50–P

---

40 CFR Part 180

[PP 0E3906/P568; FRL–4641–6]

RIN No. 2070–AC18

Pesticide Tolerance for Dimethoate

AGENCY: Environmental Protection Agency (EPA).

ACTION: Proposed rule.

SUMMARY: This document proposes that a tolerance be established for residues of the insecticide dimethoate in or on the raw agricultural commodity Brussels sprouts. The proposed regulation to establish a maximum permissible level for residues of the insecticide in or on the commodity was requested in a petition submitted by the Interregional Research Project No. 4 (IR-4).

DATES: Comments, identified by the document control number [PP 0E3906/P568], must be received on or before October 1, 1993.

ADDRESSES: By mail, submit written comments to: Public Response and Program Resources Branch, Field Operations Division (H7506C), Office of Pesticide Programs, Environmental Protection Agency, 401 M St., SW., Washington, DC 20460. In person, bring comments to: Rm. 1132, CM #2, 1921 Jefferson Davis Hwy., Arlington, VA 22202.

Information submitted as a comment concerning this document may be claimed confidential by marking any part or all of that information as "Confidential Business Information" (CBI). Information so marked will not be disclosed except in accordance with procedures set forth in 40 CFR part 2. A copy of the comment that does not contain CBI must be submitted for inclusion in the public record. Information not marked confidential may be disclosed publicly by EPA without prior notice. All written comments will be available for public inspection in Rm. 1132 at the address given above, from 8 a.m. to 4 p.m., Monday through Friday, excluding legal holidays.

FOR FURTHER INFORMATION CONTACT: By mail: Hoyt L. Jamerson, Emergency Response and Minor Use Section

(H7505W), Registration Division, Environmental Protection Agency, 401 M St., SW., Washington, DC 20460. Office location and telephone number: Sixth Floor, Crystal Station #1, 2800 Jefferson Davis Hwy., Arlington, VA 22202, (703) 308-8783.

SUPPLEMENTARY INFORMATION: The Interregional Research Project No. 4 (IR-4), New Jersey Agricultural Experiment Station, P.O. Box 231, Rutgers University, New Brunswick, NJ 08903, has submitted pesticide petition 0E3906 to EPA on behalf of the Agricultural Experiment Station of California. This petition requested that the Administrator, pursuant to section 408(e) of the Federal Food, Drug, and Cosmetic Act (21 U.S.C. 346a(e)) propose the establishment of a tolerance for residues of the pesticide dimethoate (*O,O*-dimethyl *S*-(*N*-methylcarbamoylmethyl) phosphorodithioate) including its oxygen analog (*O,O*-dimethyl *S*-(*N*-methylcarbamoylmethyl) phosphorothioate) in or on the raw agricultural commodity Brussels sprouts at 5.0 parts per million (ppm). The petitioner proposed that this use of dimethoate be limited to California based on the geographical representation of the residue data submitted. Additional residue data will be required to expand the area of usage. Persons seeking geographically broader registration should contact the Agency's Registration Division at the address provided above.

The data submitted in the petition and other relevant material have been evaluated. The toxicological data considered in support of the proposed tolerance include:

1. A 3-month feeding study in rats fed diets containing 0, 2, 8, 32, 50, and 400 ppm with a no-observed-effect-level (NOEL) for plasma, red blood cell and brain cholinesterase inhibition of 32 ppm (equivalent to 1.6 milligrams (mg)/kilogram (kg) kg/day) and a systemic NOEL of 50 ppm (equivalent to 2.5 mg/kg/day) based on depressed growth and food consumption, and increased kidney and liver weights ratios at the 400-ppm dose level.

2. A 3-month feeding study in dogs fed diets containing 0, 2, 10, 50, 1,500, and 3,000 ppm with a NOEL for red blood cell cholinesterase inhibition of 2 ppm (equivalent to 0.05 mg/kg/day) and a NOEL for systemic effects of 50 ppm (equivalent to 1.25 mg/kg/day) based on tremors and decreased food consumption in females at the 1,500-ppm dose level.

3. A 1-year feeding study in dogs fed diets containing 0, 5, 20, or 125 ppm with a NOEL of less than 5 ppm (equivalent to less than 0.18 mg/kg/day) based on decreased brain and red blood cell cholinesterase in males and decreased liver weight in females at the 5-ppm dose level.

4. A three-generation reproduction study in mice fed diets containing 0, 5, 15, or 50 ppm (equivalent to 0, 0.25, 0.75, or 2.5 mg/kg/day) with no reproductive or systemic effects observed under the conditions of the study.

5. A developmental toxicity study in rats given gavage doses of 0, 3, 6, or 18 mg/kg/day with no developmental toxicity observed under the conditions of the study. The NOEL for maternal toxicity was established at 6 mg/kg/day; rats fed 18 mg/kg/day (lowest-effect level) displayed hypersensitivity, tremors, and unsteady gait.

6. A 2-year chronic feeding/carcinogenicity study in rats fed diets containing 0, 5, 25, or 100 ppm (equivalent to 0, 0.25, 1.25 or 5.0 mg/kg/day) with a systemic NOEL of 25 ppm based on increased female mortality, decreased male body weight gain, anemia in males, and increased leukocytes in male and female rats at the 100-ppm dose level. The NOEL for cholinesterase inhibition was established at 5 ppm based on cholinesterase inhibition at the 25-ppm dose level. In male rats, there were dose-related trends for (a) spleen hemangiosarcomas (malignant tumors associated with connective tissue and blood and lymph vessels); (b) combined spleen hemangioma (benign tumors) and hemangiosarcoma; and (c) combined spleen hemangioma and hemangiosarcoma, and skin hemangiosarcoma. Furthermore, there were significant pair-wise comparisons between control and the high-dose (100 ppm) for spleen (hemangioma/hemangiosarcoma) and in the combined tumors of spleen and skin hemangioma/hemangiosarcoma and lymph angioma/angiosarcoma (benign and malignant tumors made up of lymph vessels). There was also a significant difference by pair-wise comparison between the control and low dose (5 ppm) for (a) lymph angiosarcoma, (b) combined lymph angioma and angiosarcoma, and (c) combined spleen and skin hemangioma/hemangiosarcoma and lymph angioma/angiosarcoma. There were no significant tumor increases in female rats.

7. A 78-week carcinogenicity study in B6C3F1 mice fed diets containing 0, 25, 100, or 200 ppm (equivalent to 0, 3.75, 15, or 30 mg/kg/day). In male mice there were significant dose-related increased trends for (a) combined lung adenoma and/or adenocarcinoma, (b) for lymphoma, and (c) for the combined group of lymphoma, reticularsarcoma, and leukemia. In female mice there were significant dose-related trends for (a) liver carcinoma and for (b) combined liver adenoma and/or carcinoma.

8. Dimethoate is regarded as a mutagenic compound based on the results of studies designed to determine gene mutation and structural chromosome aberrations. Dimethoate is a bacterial mutagen and shows equivocal results for gene mutations in mammalian cells. It produces clastogenic effects in several studies in vitro and in vivo, and there are suggestive results for dominant- lethal effects. The National Toxicology Program has concluded that dimethoate is a mutagenic compound based on its testing for gene mutation and chromosomal aberrations. A third category of studies to determine other genotoxic effects is a data gap for dimethoate.

Dimethoate has been classified as a possible human carcinogen (category C) by the Office of Pesticide Programs' Health Effects Division's Carcinogenicity Peer Review Committee. The Peer Review Committee supports this classification based on the appearance of equivocal hemolymphoreticular tumors in male mice, the compound-related (no dose response) weak effect of combined spleen (hemangioma and hemangiosarcoma), skin (hemangiosarcoma), and lymph (angioma and angiosarcoma) tumors in male rats, and positive mutagenic activity associated with dimethoate.

The Peer Review Committee concluded that the lung tumors seen in male mice were not biologically significant tumors related to compound administration since there were no statistically significant differences based on pair-wise comparisons with controls and each dose level. The incidence of lung tumors in the control groups was variable, and there was a high background level of these tumors. The increase in lymphoma observed in male mice in the high-dose group was of borderline statistical significance by pair-wise comparison with controls. The incidence of lymphoma in mice is also common and variable. The Committee agreed that the increased incidence for the combined hemolymphoreticular tumors in male mice is compound related, but could only classify this incidence as equivocal. The incidence of hemolyphoporeticular tumors in male mice was relatively low and consistent with historical control, only occurred in

one sex (males), and was evident only in the high-dose group.

The Committee concluded that in female mice there were no significant pair-wise comparisons, there was only the trend with combined tumors, and the combined incidence was similar to historical controls. In addition, there also was no evidence of precursor lesions to carcinogenicity. Regarding the carcinogenicity study in rats, the Committee concluded that although there were significant pair-wise comparisons at the low and high doses for all tumors combined, these tumors did not indicate much more than a weak effect.

EPA has concluded that dimethoate poses no greater than a negligible cancer risk to humans; therefore, the Agency has chosen to use reference dose calculations to estimate dietary risk from dimethoate residues. The reference dose (RfD) for dimethoate is established at 0.0002 mg/kg body weight/day. The RfD is based on a NOEL of 0.05 mg/kg bwt/day for brain cholinesterase inhibition from a 2-year feeding study in rats and an uncertainty factor of 300. A 300-fold uncertainty factor was used since an acceptable feeding study in dogs was not available when the RfD was established. The Agency plans to reevaluate the reference dose for dimethoate to determine whether an uncertainty factor of 100 is appropriate based on the results of the chronic feeding study in dogs discussed above.

The anticipated residue contribution (ARC) for the general population from published uses and the proposed use on Brussels sprouts utilizes 52 percent of the RfD. The ARC for the subgroup most highly exposed, nonnursing infants, utilizes 89 percent of the RfD based on published uses. The proposed use on Brussels sprouts would utilize an additional 14 percent of the RfD, raising the ARC to 103 percent of the RfD for nonnursing infants.

Although estimated dietary exposure to residues of dimethoate slightly exceeds the RfD for nonnursing infants, EPA does not believe that residues of dimethoate in the diet resulting from these uses poses a significant risk to nonnursing infants. The dietary exposure assessment assumes that 100 percent of the Brussels sprouts consumed in the U.S. will be treated with dimethoate. This assumption clearly overestimates dietary exposure since the proposed use will be limited to California production only. In addition, the toxicology data base appears to support a 100-fold uncertainty factor for calculating the dimethoate RfD, which would increase the RfD to a level well above estimated dietary exposure for all population subgroups.

The nature of the residue in plants is adequately understood and an adequate analytical method, gas-liquid chromatography with a thermionic detector, is available for enforcement purposes. An analytical method for enforcing this tolerance has been published in the Pesticide Analytical Manual (PAM), Vol. II. No secondary residues in meat, milk, poultry, or eggs are expected since Brussels sprouts are not considered a livestock feed commodity. There are presently no actions pending against the continued registration of this chemical.

Based on the above information considered by the Agency the tolerance established by amending 40 CFR 180.204 would protect the public health. Therefore, it is proposed that the tolerance be established as set forth below.

Any person who has registered or submitted an application for registration of a pesticide, under the Federal Insecticide, Fungicide, and Rodenticide Act (FIFRA) as amended, which contains any of the ingredients listed herein, may request within 30 days after publication of this document in the Federal Register that this rulemaking proposal be referred to an Advisory Committee in accordance with section 408(e) of the Federal Food, Drug, and Cosmetic Act.

Interested persons are invited to submit written comments on the proposed regulation. Comments must bear a notation indicating the document control number, [PP 0E3906/P568]. All written comments filed in response to this petition will be available in the Public Response and Program Resources Branch, at the address given above from 8 a.m. to 4 p.m., Monday through Friday, except legal holidays.

The Office of Management and Budget has exempted this rule from the requirements of section 3 of Executive Order 12291.

Pursuant to the requirements of the Regulatory Flexibility Act (Pub. L. 96-354, 94 Stat. 1164, 5 U.S.C. 601-612), the Administrator has determined that regulations establishing new tolerances or raising tolerance levels or establishing exemptions from tolerance requirements do not have a significant economic impact on a substantial number of small entities. A certification statement to this effect was published in the **Federal Register** of May 4, 1981 (46 FR 24950).

List of Subjects in 40 CFR Part 180

Administrative practice and procedure, Agricultural commodities, Pesticides and pests, Reporting and recordkeeping requirements.

Dated: August 16, 1993.

Lawrence E. Culleen,

Acting Director, Registration Division, Office of Pesticide Programs.

Therefore, it is proposed that 40 CFR part 180 be amended as follows:

PART 180—[AMENDED]

1. The authority citation for part 180 continues to read as follows:

Authority: 21 U.S.C. 346a and 371.

2. In § 180.204, by amending paragraph (b) in the table therein by adding and alphabetically inserting the commodity Brussels sprouts, to read as follows:

§ 180.204 Dimethoate, including its oxygen analog; tolerances for residues.

* * * * *

(b) Tolerances with regional registration, as defined in § 180.1(n), are established for total residues of the insecticide dimethoate including its oxygen analog in or on the following raw agricultural commodities:

Commodity	Parts per million
Brussels sprouts	5.0
* * * *	*

[FR Doc. 93-21082 Filed 8-31-93; 8:45 am]

BILLING CODE 6560-50-F

---

40 CFR Part 180

[PP 0E2391/P555; FRL-4188-5]

RIN No. 2070-AB78

Pesticide Tolerance for Phorate

AGENCY: Environmental Protection Agency (EPA).

ACTION: Proposed rule.

SUMMARY: This document proposes to establish an import tolerance for combined residues of the insecticide phorate (*O,O*-diethyl *S*(ethylthio)methyl] phosphorodithioate) and its cholinesterase-inhibiting metabolite in or on the raw agricultural commodity (RAC) coffee beans. This proposal to establish a maximum permissible level for residues of the insecticide was requested by the American Cyanamid Co.

DATES: Comments, identified by the document control number [PP-0E2391/P555], must be received on or before October 1, 1993.

ADDRESSES: By mail, submit written comments to: Public Response and Program Resources Branch, Field Operations Division (H7506C), Office of Pesticide Programs, Environmental Protection Agency, 401 M St., SW., Washington, DC 20460. In person, deliver comments to: Rm. 1128, CM #2, 1921 Jefferson Davis Hwy., Arlington, VA 22202.

Information submitted as a comment concerning this document may be claimed confidential by marking any part or all of that information as "Confidential Business Information" (CBI). Information so marked will not be disclosed except in accordance with procedures set forth in 40 CFR part 2. A copy of the comment that does not contain CBI must be submitted for inclusion in the public record. Information not marked confidential will be included in the public docket by EPA without prior notice. The public docket is available for public inspection in Rm. 1128 at the address given above, from 8 a.m. to 4 p.m., Monday through Friday, excluding legal holidays.

FOR FURTHER INFORMATION CONTACT: By mail: Robert A. Forrest, Product Manager (PM) 14, Registration Division (H7505C), Office of Pesticide Programs, Environmental Protection Agency, 401 M St., SW., Washington, DC 20460. Office location and telephone number: Rm. 219, CM #2, 1921 Jefferson Davis Hwy., Arlington, VA 22202, (703)-305-6600.

SUPPLEMENTARY INFORMATION: The American Cyanamid Co., Agricultural Research Division, P.O. Box 400, Princeton, NJ 08540, has submitted pesticide petition (PP) 0E2391 to EPA requesting that the Administrator, pursuant to section 408(e) of the Federal Food, Drug, and Cosmetic Act, 21 U.S.C. 346a(e), propose the establishment of a tolerance for the combined residues of the insecticide phorate and its cholinesterase-inhibiting metabolites in or on the raw agricultural commodity coffee beans at 0.02 part per million (ppm).

The data submitted in the petition and other relevant material have been evaluated. The pesticide is considered useful for the purpose for which the tolerance is sought. The toxicological data considered in support of the proposed tolerance include:

1. A 1-year dog feeding study with a no-observed-effect level (NOEL) of 0.05 milligram/kilogram/day (mg/kg/day) based on the inhibition of brain cholinesterase activity.

2. A 2-year rat feeding/carcinogenicity study with inhibition of plasma cholinesterase activity observed at 1 ppm (lowest dose tested, no carcinogenic effects were observed at levels up to and including 6 ppm (highest dose tested).

3. An 18-month mouse carcinogenicity study with a systemic NOEL of 3 ppm based on a decrease in weight gain. No carcinogenic effects were observed at levels up to and including 6 ppm (highest dose tested).

4. A 3-month rat feeding study with an NOEL of 0.66 ppm based on inhibition of cholinesterase activity. Doses tested were 0, 0.22, 0.66, 2.0, 6.0, 12.0, and 18.0.

5. A 13-week mouse feeding study with depressed cholinesterase levels observed at both the 3-ppm and the 6-ppm level. Levels tested were 0, 1, 3, and 6 ppm. The effects observed in this study support the conclusion that the dosages in the above-noted 18-month mouse study were adequate.

6. A three-generation mouse reproductivity study with a NOEL of 1.5 ppm for reproductive effects.

7. A rat developmental toxicity study with a lowest-effect level (LEL) of 0.5 mg/kg (highest dose tested).

8. A rabbit developmental toxicity study with a NOEL of 1.2 mg/kg/day.

9. An acute delayed neurotoxicity study in hens which was negative for neurotoxic effects under the conditions of the study (dose tested was 14.2 mg/kg).

10. Several mutagenicity studies which were negative. These include gene mutation tests with and without metabolic activation; structural chromosome aberration tests (dominant lethal test in mice and chromosome aberrations in vivo in mammalian bone marrow cells); mitotic recombination with and without metabolic activation; preferential toxicity assays in DNA repair-proficient and repair-deficient strains of *E. coli* and *Bacillus subtilis*; and unscheduled DNA synthesis in human fibroblasts.

11. A rat metabolism study in which 85 percent of the dose (0.44 mg/kg) was excreted in 24 hours. All of the phorate-labeled metabolites recovered in the urine and tissues were composed of a nonphosphorylated series of metabolites. (Phosphorylated metabolites were found in feces only). The more potent oxidative phosphorylated products represent a minor proportion of the phorate metabolites measured.

12. A 90-day rat feeding study using phorate sulfoxide, an oxidative phosphorylated metabolite of phorate as the test substance with an NOEL of 0.32 ppm based on inhibition of plasma and red blood cell (RBC) cholinesterase activity.

The reference dose (RfD), based on the brain cholinesterase inhibition NOEL as defined in a 1-year dog feeding study (0.05 mg/kg/day) and using an uncertainty factor of 100, is calculated to be 0.0005 mg/kg of body weight per day. The Anticipated Residue Contribution (ARC) for existing tolerances for the overall U.S. population is 0.000492 mg/kg/day, which represents 98 percent of the RfD. The current action will contribute a Theoretical Maximum Residue Contribution (TMRC) of less than 0.000001 mg/kg/day for the overall U.S. population or 0.2 percent of the RfD.

This tolerance and current established tolerances would utilize a total of 99 percent of the RfD for the overall U.S. population. The most highly exposed subgroups, nonnursing infants less than 1-year-old and children 1 to 6 years old, are not affected by this tolerance.

The nature of the residues is adequately understood for the use of phorate on coffee beans imported from Central America and South America. The nature of the residues in plants is adequately defined, and there are no animal feed items associated with this use. Therefore, it is expected that no secondary residues in meat, milk, poultry, and eggs will result from the use of the pesticide on coffee beans.

An adequate analytical method, gas chromatograph with a flame ionization detector, is available in the Pesticide Analytical Manual, Vol. II., for enforcement purposes.

Based on the information considered by the Agency, the tolerance established by amending 40 CFR 180.206 would protect the public health. Therefore, it is proposed that the tolerance be established as set forth below.

Any person who has registered or submitted an application for registration of a pesticide, under the Federal Insecticide, Fungicide, and Rodenticide Act (FIFRA) as amended, which contains any of the ingredients listed herein, may request within 30 days after publication of this document in the **Federal Register** that this rulemaking proposal be referred to an Advisory Committee in accordance with section 408(e) of the Federal Food, Drug, and Cosmetic Act.

Interested persons are invited to submit written comments on the proposed regulation. Comments must bear a notation indicating the document control number, [PP 0E2391/P555]. All written comments filed in response to this petition will be available in the Public Response and Program Resources Branch, at the address given above, from 8 a.m. to 4 p.m., Monday through Friday, except legal holidays.

The Office of Management and Budget has exempted this rule from the requirements of section 3 of Executive Order 12291.

Pursuant to the requirements of the Regulatory Flexibility Act (Pub. L. 96-354, 94 Stat. 1164, 5 U.S.C. 601-612), the Administrator has determined that regulations establishing new tolerances or raising tolerance levels or establishing exemptions from tolerance requirements do not have a significant economic impact on a substantial number of small entities. A certification statement to this effect was published in the **Federal Register** of May 4, 1981 (46 FR 24950).

List of Subjects in 40 CFR Part 180

Administrative practice and procedure, Agricultural commodities, Pesticides and pests, Recording and recordkeeping requirements.

Dated: August 18, 1993.

Lawrence E. Culleen,

Acting Director, Registration Division, Office of Pesticide Programs.

Therefore, it is proposed that 40 CFR part 180 be amended as follows:

PART 180—[AMENDED]

1. The authority citation for part 180 continues to read as follows:

Authority: 21 U.S.C. 346a and 371.

2. In § 180.206 the commodity coffee beans is added to the list of commodities therein and the list is revised into a tabular format; as revised, the section reads as follows:

§ 180.206 Phorate; tolerances for residues.

Tolerances are established for combined residues of the insecticide phorate (*O,O*-diethyl *S*[(ethylthio)methyl] phosphordithioate) and its cholinesterase-inhibiting metabolites in or on raw agricultural commodities as follows:

Commodity	Parts per million
Alfalfa, fresh	0.5
Alfalfa, hay	1.0
Barley, grain	0.1
Barley, straw	0.1
Beans	0.1
Bean, vines	0.5
Cattle, fat	0.05
Cattle, mbyp	0.05
Cattle, meat	0.05
Coffee beans[1]	0.02
Corn, forage	0.5
Corn, grain	0.1
Corn, sweet (K + CWHR)	0.1
Cottonseed	0.05
Goats, fat	0.05
Goats, mbyp	0.05
Goats, meat	0.05
Hogs, meat	0.05
Hogs, mbyp	0.05
Hops	0.5
Horses, fat	0.05
Horses, mbyp	0.05
Horses, meat	0.05
Lettuce	0.1
Milk (negligible residue)	0.02
Peanuts	0.1
Peanut, hay	0.3
Peanut, vines	0.3
Potatoes	0.5
Poultry, fat	0.05
Poultry, mbyp	0.05
Poultry, meat	0.05
Rice	0.1
Sheep, fat	0.05
Sheep, mbyp	0.05
Sheep, meat	0.05
Sorghum, grain	0.1
Sorghum, fodder	0.1
Soybeans	0.1
Straw, Bermuda grass	0.5
Sugar beet, roots	0.3
Sugar beet, tops	3.0
Sugarcane	0.1
Tomatoes	0.1
Wheat, grain	0.05
Wheat, green fodder	1.5
Wheat, straw	0.05

[1]There are no U.S. registrations as of September 1, 1993 for coffee beans.

[FR Doc. 93–21249 Filed 8–31–93; 8:45 am]

BILLING CODE 6560–50–F

DEPARTMENT OF THE INTERIOR

Bureau of Land Management

43 CFR Part 8360

Occupancy and Camping Stay Limits

AGENCY: Bureau of Land Management, Interior.

ACTION: Notice of proposed rulemaking.

SUMMARY: This proposed occupancy and camping stay limit would apply to designated campgrounds, and to undeveloped Bureau of Land Management administered public lands (that are not closed to camping) within the Ukiah District, California. Persons may camp on these public lands for a period of not more than 14 days during any calendar year, in each of the District's three Resource Areas—Redding, Clear Lake and Arcata. The 14 day limit may be reached either through a number of separate visits, or through 14 days of continuous occupation. After the 14th day of occupation, campers will not be permitted to camp within that Resource Area for the remainder of the calendar year. Under special circumstances and upon request, the authorized officer may give written permission for extension of the 14 day limit.

Camping is defined as the use of tents or shelters of natural or synthetic material, preparing a sleeping bag or bedding material for use, or mooring of a vessel, or parking a vehicle or trailer for the apparent purpose of occupancy. Occupancy is defined as the taking, maintaining or holding possession of a camp or residence on public land, either by personal presence or by leaving property on the site. Vehicles or property left unattended to hold sites may be subject to impoundment.

Unless elsewhere authorized, any vehicle, trailer, camper, or vessel left unattended on public lands for more than 10 days, or at a developed recreation site for more than 72 hours, will be considered abandoned and may be impounded by the Authorized Officer through the use of local towing and impounding services. This property will subsequently be subject to State and/or county laws or ordinances affecting the disposal, sale or destruction of such property.

DATES: All comments and information shall be submitted in writing by October 1, 1993.

ADDRESSES: All comments concerning this proposed rulemaking should be addressed to David Howell, District Manager, Bureau of Land Management, Ukiah District Office, 555 Leslie Street, Ukiah, California 95482.

FOR FURTHER INFORMATION CONTACT:

Robert Wick, Recreation Planner, Ukiah District Office, (707) 462–3873.

SUPPLEMENTARY INFORMATION: This occupancy and camping stay limit is proposed to be established to provide consistency and uniformity for the camping public on Bureau of Land Management administered lands throughout the Ukiah District, California, and to prevent user conflicts by providing equal opportunities to camp in given areas. Establishment of this length of stay limit is also to assist the Bureau in reducing the incidence of unauthorized occupancy of public lands in the name of recreational camping. These supplementary rules do not supersede camping and occupancy rules developed for special areas or emergency situations.

Authority for this stay is contained in CFR title 43, chapter II, part 8360, subparts 8364.1 and 8365.1–2(a). Violations of the supplementary rules under authority of 43 CFR 8365.1–2 are subject to a fine not to exceed $100,000

and/or imprisonment not to exceed 12 months.

Eric W. Natti,

Acting District Manager.

[FR Doc. 93-21178 Filed 8-31-93; 8:45 am]

BILLING CODE 4333-01-M

FEDERAL COMMUNICATIONS COMMISSION

47 CFR Part 73

[MM Docket No. 93-237, RM-8312]

Radio Broadcasting Services; Jeffersonville, New York

AGENCY: Federal Communications Commission.

ACTION: Proposed rule.

SUMMARY: The Commission requests comments on a petition filed by Michael S. Celenza seeking the allotment of Channel 271A to Jeffersonville, New York, as the community's second local commercial FM service. Channel 271A can be allotted to Jeffersonville in compliance with the Commission's minimum distance separation requirements without the imposition of a site restriction, at coordinates North Latitude 41-46-51 and West Longitude 74-56-03. Canadian concurrence is required since Jeffersonville is located within 320 kilometers (200 miles) of the U.S.-Canadian border.

DATES: Comments must be filed on or before October 18, 1993, and reply comments on or before November 17, 1993.

ADDRESSES: Federal Communications Commission, Washington, DC 20554. In addition to filing comments with the FCC, interested parties should serve the petitioner, or its counsel or consultant, as follows: James K. Edmondson, Esq., Gardner, Carton & Douglas, 1301 K Street, NW., Suite 900, East Tower, Washington, DC 20005 (Counsel to petitioner).

FOR FURTHER INFORMATION CONTACT: Leslie K. Shapiro, Mass Media Bureau, (202) 634-6530.

SUPPLEMENTARY INFORMATION: This is a synopsis of the Commission's Notice of Proposed Rule Making, MM Docket No. 93-237, adopted August 9, 1993, and released August 26, 1993. The full text of this Commission decision is available for inspection and copying during normal business hours in the FCC Reference Center (room 239), 1919 M Street, NW., Washington, DC. The complete text of this decision may also be purchased from the Commission's copy contractor, International Transcription Services, Inc., (202) 857-3800, 2100 M Street, NW., Suite 140, Washington, DC 20037.

Provisions of the Regulatory Flexibility Act of 1980 do not apply to this proceeding.

Members of the public should note that from the time a Notice of Proposed Rule Making is issued until the matter is no longer subject to Commission consideration or court review, all ex parte contacts are prohibited in Commission proceedings, such as this one, which involve channel allotments. See 47 CFR 1.1204(b) for rules governing permissible ex parte contacts.

For information regarding proper filing procedures for comments, see 47 CFR 1.415 and 1.420.

List of Subjects in 47 CFR Part 73

Radio broadcasting.

Federal Communications Commission.

Michael C. Ruger,

Chief, Allocations Branch, Policy and Rules Division, Mass Media Bureau.

[FR Doc. 93-21163 Filed 8-31-93; 8:45 am]

BILLING CODE 6712-01-M

47 CFR Part 73

[MM Docket No. 93-236, RM-8306]

Radio Broadcasting Services; Tulelake, CA

AGENCY: Federal Communications Commission.

ACTION: Proposed rule.

SUMMARY: This document requests comments on a petition for rule making filed by Wynne Broadcasting Company, Inc., permittee of Station KFLS-FM, Channel 243C2, Tulelake, California, seeking the substitution of Channel 243C for Channel 243C2 and modification of its permit accordingly to specify operation on the higher powered channel. Coordinates for this proposal are 42-05-50 and 121-37-59.

Petitioner's modification proposal complies with the provisions of § 1.420(g) of the Commission's Rules. Therefore, we will not accept competing expressions of interest in the use of Channel 243C at Tulelake, or require the petitioner to demonstrate the availability of an additional equivalent class channel.

DATES: Comments must be filed on or before October 18, 1993, and reply comments on or before November 17, 1993.

ADDRESSES: Secretary, Federal Communications Commission, Washington, DC 20554. In addition to filing comments with the FCC, interested parties should serve the petitioner, as follows: Wynne Broadcasting Company, Inc., Attn: Robert Wynne, President, 1338 Oregon Ave., P.O. Box 1450, Klamath Falls, OR 97601.

FOR FURTHER INFORMATION CONTACT: Nancy Joyner, Mass Media Bureau, (202) 634-6530.

SUPPLEMENTARY INFORMATION: This is a synopsis of the Commission's Notice of Proposed Rule Making, MM Docket No. 93-236, adopted August 9, 1993, and released August 26, 1993. The full text of this Commission decision is available for inspection and copying during normal business hours in the FCC's Reference Center (room 239), 1919 M Street, NW., Washington, DC. The complete text of this decision may also be purchased from the Commission's copy contractors, International Transcription Service, Inc., (202) 857-3800, 2100 M Street, NW., Suite 140, Washington, DC 20037.

Provisions of the Regulatory Flexibility Act of 1980 do not apply to this proceeding.

Members of the public should note that from the time a Notice of Proposed Rule Making is issued until the matter is no longer subject to Commission consideration or court review, all ex parte contacts are prohibited in Commission proceedings, such as this one, which involve channel allotments. See 47 CFR 1.1204(b) for rules governing permissible ex parte contacts.

For information regarding proper filing procedures for comments, See 47 CFR 1.415 and 1.420.

List of Subjects in 47 CFR Part 73

Radio broadcasting.

Federal Communications Commission.

Michael C. Ruger,

Chief, Allocations Branch, Policy and Rules Division, Mass Media Bureau.

[FR Doc. 93-21164 Filed 8-31-93; 8:45 am]

BILLING CODE 6712-01-M

47 CFR Part 73

[MM Docket No. 93-234, RM-8289]

Television Broadcasting Services; Boca Raton and Lake Worth, Florida

AGENCY: Federal Communications Commission.

ACTION: Proposed rule.

SUMMARY: The Commission requests comments on a petition filed jointly by Palmetto Broadcasters Associated for Communities, Inc., permittee of noncommercial television Station WPPB-TV, Channel *63, Boca Raton, Florida, Fouce Amusement Enterprises,

Inc., and Hispanic Broadcasting, Inc., permittee of unbuilt television Station WHBI–TV, Channel 67, Lake Worth, Florida. The petition requests the exchange of their channels of operation, pursuant to § 1.420(h) of the Commission's Rules, and an exchange of their communities of license, pursuant to § 1.420(i) of the Commission's Rules. If granted, this proposal would result in the operation of Station WPPB–TV on Channel *67 at Lake Worth and Station WHBI–TV on Channel 63 at Boca Raton. See Supplemental Information, infra.

DATES: Comments must be filed on or before October 18, 1993, and reply comments on or before November 17, 1993.

ADDRESSES: Federal Communications Commission, Washington, DC 20554. In addition to filing comments with the FCC, interested parties should serve the petitioners, or their counsels, as follows: Kevin C. Boyle and Elizabeth C. Brown, Latham and Watkins, 1001 Pennsylvania Avenue, NW., Suite 1300, Washington, DC, 20004 (counsel for Palmetto Broadcasters Associated for Communities, Inc.); N. Frank Wiggins, Venable Baetjer Howard and Civiletti, 1201 New York Avenue, NW., Suite 1000, Washington, DC, 20005 (counsel for Fouce Amusement Enterprises, Inc.); and Hispanic Broadcasting, Inc., 2203 NE. 203rd Terrace, North Miami Beach, Florida, 33180 (permittee of Station WHBI–TV, Channel 67, Lake Worth, Florida).

FOR FURTHER INFORMATION CONTACT: Nancy J. Walls, Mass Media Bureau, (202) 634–6530.

SUPPLEMENTARY INFORMATION: This is a synopsis of the Commission's Notice of Proposed Rule Making, MM Docket No. 93–234, adopted August 6, 1993, and released August 26, 1993. The full text of this Commission decision is available for inspection and copying during normal business hours in the FCC Reference Center (room 239), 1919 M Street, NW., Washington, DC. The complete text of this decision may also be purchased from the Commission's copy contractor, International Transcription Services, Inc., (202) 857–3800, 2100 M Street, NW., Suite 140, Washington, DC 20037.

Channel *67 can be allotted to Lake Worth at coordinates 26–22–14 and 80–10–21, with a site restriction of 29.5 kilometers (18.3 miles) south. Channel 63 can be allotted to Boca Raton at coordinates 25–58–15 and 80–12–32, with a site restriction of 43.7 kilometers (27.1 miles) south. In accordance with §§ 1.420(h) and 1.420(i) of the Commission's Rules, we will not accept competing expressions of interest in the use of Channel *67 at Lake Worth or Channel 63 at Boca Raton or require the petitioners to demonstrate the availability of additional equivalent class channels for use by such parties.

Provisions of the Regulatory Flexibility Act of 1980 do not apply to this proceeding.

Members of the public should note that from the time a Notice of Proposed Rule Making is issued until the matter is no longer subject to Commission consideration or court review, all ex parte contacts are prohibited in Commission proceedings, such as this one, which involve channel allotments. See 47 CFR 1.1204(b) for rules governing permissible ex parte contacts.

For information regarding proper filing procedures for comments, see 47 CFR 1.415 and 1.420.

List of Subjects in 47 CFR Part 73

Television broadcasting.

Federal Communications Commission.

Michael C. Ruger,

Chief, Allocations Branch, Policy and Rules Division, Mass Media Bureau.

[FR Doc. 93–21166 Filed 8–31–93; 8:45 am]

BILLING CODE 6712–01–M

DEPARTMENT OF COMMERCE

National Oceanic and Atmospheric Administration

50 CFR Parts 285, 630, and 678

[I.D. 082793A]

Atlantic Shark, Tuna and Swordfish Fisheries

AGENCY: National Marine Fisheries Service (NMFS), National Oceanic and Atmospheric Administration (NOAA), Commerce.

ACTION: Notice of public scoping meetings on Atlantic shark, bluefin tuna and swordfish issues; request for comments.

SUMMARY: NMFS will hold thirteen public scoping meetings to receive comments from fishery participants and other members of the public regarding: Measures to limit derby-style fishing and other issues in the Atlantic Shark fishery; revision of measures to limit Atlantic bluefin tuna bycatch in the area south of 36°00′ N. latitude, in an effort to increase fishing efficiency, and other issues; and, the need and alternatives for effort limitation in the Atlantic swordfish fishery, and other issues. To accommodate people unable to attend a scoping meeting or wishing to provide additional comments, NMFS is also soliciting written comments on these and other issues of concern in these fisheries. In addition, NMFS requests input, by mail or by fax, to develop an issues/options statement before the scoping meetings.

DATES: See **SUPPLEMENTARY INFORMATION** for dates, times, and locations of the scoping meetings. Written comments on the issues above must be received on or before November 1, 1993.

ADDRESSES: See **SUPPLEMENTARY INFORMATION** for the addresses of the scoping meeting locations. Written comments should be sent to Richard H. Schaefer, Director, Office of Fisheries Conservation and Management (F/CM), National Marine Fisheries Service, 1335 East-West Highway, Silver Spring, MD 20910. Clearly mark the outside of the envelope "Atlantic Shark Comments," "Atlantic Bluefin Tuna Comments," or "Atlantic Swordfish Comments." Please do not combine comments on these three topics in the same letter. Input for the issues/options statement may also be provided to the same address, or by sending a fax to Richard B. Stone at 301–588–4967.

FOR FURTHER INFORMATION CONTACT: (1) Rod Dalton at 813–893–3161 for swordfish; (2) Michael Justen at 813–893–3161 for sharks; and (3) Richard B. Stone, telephone 301–713–2347, fax 301–588–4967, for Atlantic bluefin tuna or general information.

SUPPLEMENTARY INFORMATION: The Atlantic, Caribbean and Gulf of Mexico shark fisheries are managed under authority of the Magnuson Fishery Conservation and Management Act (Magnuson Act) (16 U.S.C. 1801 *et seq.*). Fishing by U.S. vessels is governed by regulations implementing the fishery management plan (FMP) at 50 CFR part 678. Regulations promulgated under the authority of the Atlantic Tunas Convention Act (ATCA) (16 U.S.C. 971 *et seq.*) regulating the harvest of Atlantic bluefin tuna by persons and vessels subject to U.S. jurisdiction are found at 50 CFR part 285. The Atlantic swordfish fishery is managed under the authority of the Magnuson Act (16 U.S.C. 1801 *et seq.*) and the ATCA (16 U.S.C. 971 *et seq.*), with regulations found at 50 CFR part 630.

Atlantic Sharks

Final regulations implemented the FMP for Sharks of the Atlantic Ocean and became effective on April 26, 1993. The FMP divided the 39 shark species in the management unit into three groups for management and resource assessment purposes. The FMP concluded that the large coastal species group is overfished while the pelagic and small coastal species groups are

fully exploited. In order to reduce fishing mortality, and as part of the rebuilding program, the FMP provided quotas for the commercial fishery for the large coastal and pelagic species groups.

NMFS wishes to obtain public comment on short-term as well as long-term measures to deal with the problems associated with open access of the shark fishery (see discussion below). Short-term measures are those that NMFS could implement for the shark fishery by the start of the new fishing year, such as trip limits, seasonal closures, and combinations of the two. Longer-term measures, which NMFS could implement within two-to-four years, include a moratorium on the issuance of vessel permits and changes in the types of permits, license limitations, and individual quotas. Other issues may also be addressed at the scoping meetings.

The number of permitted vessels in the shark fishery has substantially exceeded the number of vessels that have actually participated in the fishery, and exceeded 1,400 in 1993. Only about 40 vessels could catch the entire quota of 2,436 metric tons dressed weight (mt dw). Although many permitted vessels are not actively fishing, they represent substantial potential for further overcapitalization of the fishery and realization of the problems associated with open access.

Swordfish

Since July 1991, the Atlantic swordfish fishery has been subject to quotas limiting the total allowable catch (TAC). This TAC is divided into several portions, including directed longline and drift gillnet fisheries and bycatch quotas. The fishery currently operates under open access conditions.

In recent years, the number of permitted vessels has substantially exceeded the number of vessels that have actually participated in the fishery, and has increased dramatically in 1993. A control date was published in the **Federal Register** on August 30, 1991 (56 FR 42982). Although many of these permitted vessels are not actively fishing, they represent substantial potential for further overcapitalization of the fishery and realization of the problems associated with open access. Recent developments in other fisheries have raised concern that participation in the swordfish fishery may increase. Other issues of concern in the swordfish fishery may also be addressed at these scoping meetings.

Open Access and Effort Limitation in the Atlantic Shark and Swordfish Fisheries

Since the Atlantic swordfish and shark fisheries currently operate under open access, any vessel owner may obtain a permit and enter the fishery. Open access often contributes to such problems as: Intense competition for limited global quotas; shorter fishing seasons; regional allocation and gear conflicts; displacement from fishing grounds due to crowding; highgrading; increased bycatch and discarding; market gluts, lower quality, and lower prices; inability to plan for and/or fill long-term orders; and general economic inefficiency due to overcapitalization in the harvesting and processing sectors.

There is support within NMFS and the Atlantic shark and swordfish industries for consideration and evaluation of alternatives to the current open access system. Many participants in these industries support and have recommended some form of restriction on issuance of permits to new participants in the fishery, e.g., a moratorium on new entrys. NMFS, through its strategic plan goals and objectives, has expressed support for converting appropriate fisheries from open access to some form of controlled access. The scoping meetings are an initial step in evaluating alternatives to the current open access system. At this time, there is no commitment to take any action beyond consideration and evaluation of options.

There are many issues involved in moving toward any form of controlled access to a fishery. Through the scoping meetings and submission of written comments, NMFS is seeking the views of industry participants and the public regarding such issues as: The need for some form of effort limitation or controlled access; possible alternative approaches for achieving effort limitation or controlled access; and, the range of potential economic, social, biological, and environmental effects that might result from alternative approaches, including the no action alternative. Other more specific issues include, but are not limited to: Eligibility criteria; duration of any limitation; transferability of permits; limits on vessel upgrading (i.e., increasing effective fishing power); ownership limits; and establishment of appeal mechanisms.

Atlantic Bluefin Tuna

The incidental Atlantic bluefin tuna fishery in the area south of 36°00′ N. latitude is restricted to a bycatch fishery, as stated in § 285.31(a)(30). Bycatch limits in this area are limited to one Atlantic bluefin tuna per vessel per fishing trip, provided that at least 2,500 pounds (1,134 kg) of species other than Atlantic bluefin tuna are caught and offloaded from the same trip and are recorded on the dealer weighout form as sold.

In recommending that no directed bluefin tuna fishery be allowed in the Gulf of Mexico, the International Commission for the Conservation of Atlantic Tunas (ICCAT) has expressed its highest concern for the protection of spawning aggregations. NMFS believes that several of the measures that have been suggested to reduce fishing mortality in the area south of 36°00′ N. latitude merit consideration (e.g., seasonal/area closures, breakaway gear, leader strength, use of circle hooks). However, before implementation, NMFS would like more definitive data on these potential measures to reduce incidental mortality on the spawning stock.

In the interim, NMFS is pursuing the possibility of proposing, for implementation in January 1994, modification of the bycatch limitations based on data from recent years, and possibly a requirement for a minimum number of days between a vessel's landings of an Atlantic bluefin tuna, for the area south of 36°00′ N. latitude. Public comment received by NMFS indicates that this form of bycatch restrictions will allow the fleet in this area to operate in the directed fisheries in a more efficient manner, without increasing total incidental catch of bluefin tuna. Among other sources of data and/or information on the bycatch issue, NMFS would consider logbook data in terms of defining the minimum number of days between landings. Other issues of concern in the Atlantic bluefin tuna fishery may also be addressed at the scoping meetings.

Scoping Meetings

Each of the scoping meetings (unless otherwise noted) will include a shark component from 3 to 5 p.m., a bluefin tuna component from 6 to 7 p.m., and a swordfish component from 7 to 10 p.m. These scheduled times may be adjusted among the three fishery topics depending upon expressed interests of the audience. Such adjustments are at the discretion of the Meeting Officer. Note that the meetings in Madeira Beach, FL will be held over a two-day period at the specified times, and that the meetings in Manteo, NC, have a different schedule. The meeting schedule is as follows:

September 13, 1993, Portland, ME

State of Maine Room, City Hall, 389 Congress St., Portland, ME 04101.

September 13, 1993, Galveston, TX

San Luis Hotel and Conference Center, 5222 Seawall Blvd., Galveston, TX 77551.

September 13, 1993, Daytona Beach, FL

Daytona Beach Community College, Theater Center, 1200 International Speedway Blvd. (US 92), Daytona Beach, FL 32114.

September 14, 1993, New Bedford, MA

Seaport Inn, 110 Middle St., Fairhaven, MA 02719.

September 14, 1993, New Orleans, LA

World Trade Center Bldg., suite 1830, Crescent City Room, #2 Canal St., New Orleans, LA 70130.

September 14, 1993, Lakeworth, FL

Allied Health Lecture Hall, room 101, Palm Beach Community College, 4200 Congress Ave., Lake Worth, FL 33461–4796.

September 15, 1993, Montauk, NY

Montauk Fire House, 12 Flamingo Ave., Montauk, NY 11954.

September 15, 1993, Panama City, FL

NMFS Panama City Lab, 3500 Delwood Beach Rd., Panama City, FL 32407.

September 15, 1993, Charleston, SC

SC Wildlife and Marine Resources Dept (MRRI), 217 Fort Johnson Rd., Charleston, SC 29422.

September 16, 1993, Barnegat Light, NJ

Barnegat Light Fire House, 10th and Boulevard, Barn Light, NJ 08006.

September 16, 1993, Madeira Beach, FL (Tuna and Swordfish only)

Madeira Beach City Hall, 300 Municipal Dr., Madeira Beach, FL 33708.
Tuna: 6:30 to 7:30 p.m.
Swordfish: 7:30 to 10 p.m.

September 16, 1993, Manteo, NC

NC Aquarium, Airport Rd., Manteo, NC 27954.
Swordfish: 3 to 5 p.m.
Tuna: 6–7 p.m.
Sharks: 7–10 p.m.

September 17, 1993, Madeira Beach, FL (Sharks only)

Madeira Beach City Hall, 300 Municipal Dr., Madeira Beach, FL 33708.
Time: 6:30 to 10 p.m.

Dated: August 27, 1993.

Richard H. Schaefer,

Director of Office of Fisheries, Conservation and Management, National Marine Fisheries Service.

[FR Doc. 93–21299 Filed 8–27–93; 3:19 pm]

BILLING CODE 3510–22–P

Notices

Federal Register
Vol. 58, No. 168
Wednesday, September 1, 1993

This section of the FEDERAL REGISTER contains documents other than rules or proposed rules that are applicable to the public. Notices of hearings and investigations, committee meetings, agency decisions and rulings, delegations of authority, filing of petitions and applications and agency statements of organization and functions are examples of documents appearing in this section.

DEPARTMENT OF AGRICULTURE

Forms Under Review by Office of Management and Budget

August 27, 1993.

The Department of Agriculture has submitted to OMB for review the following proposal for the collection of information under the provisions of the Paperwork Reduction Act (44 U.S.C. chapter 35) since the last list was published. This list is grouped into new proposals, revisions, extension, or reinstatements. Each entry contains the following information:

(1) Agency proposing the information collection;

(2) Title of the information collection;

(3) Form number(s), if applicable;

(4) How often the information is requested;

(5) Who will be required or asked to report;

(6) An estimate of the number of responses;

(7) An estimate of the total number of hours needed to provide the information;

(8) Name and telephone number of the agency contact person.

Questions about the items in the listing should be directed to the agency person named at the end of each entry. Copies of the proposed forms and supporting documents may be obtained from: Department Clearance Officer, USDA, OIRM, room 404–W Admin. Bldg., Washington, DC 20250, (202) 690–2118.

Revision

• *Packers and Stockyard Administration*
Economic Research and Analysis of Concentration in the Red Meat Packing Industry.
On occasion.
Businesses or other for-profit; 458 responses; 10,344 hours.
Warren P. Preston (202) 720–7455.

• *National Agricultural Statistics Service*
Pesticide Data/Water Quality Program.
On occasion.
Farms; Businesses or other for-profit; 18,690 responses; 11,361 hours.
Larry Gambrell (202) 720–5778.

• *Food and Nutrition Service*
Report of School Program Operations. FNS–10
Monthly; Annually.
State or local governments; 2,976 responses; 110,112 hours.
Alan Rich (703) 305–2113.

New Collection

• *Forest Service*
Southland Urban Proximate Wilderness Use Study.
One time survey.
Individuals or households; 3000 responses; 692 hours.
Patricia L. Winter (909) 276–6877.

Larry K. Roberson,
Deputy Department Clearance Officer.

[FR Doc. 93–21276 Filed 8–31–93; 8:45 am]
BILLING CODE 3410–01–M

Federal Grain Inspection Service

Request for Applications From Persons Interested in Designation to Provide Official Services in the Geographic Area Presently Assigned to the State of Alabama (AL)

AGENCY: Federal Grain Inspection Service (FGIS), USDA.

ACTION: Notice.

SUMMARY: The United States Grain Standards Act, as amended (Act), provides that official agency designations shall end not later than triennially and may be renewed. The designation of the Alabama Department of Agriculture and Industries (Alabama) will end February 28, 1994, according to the Act, and FGIS is asking persons interested in providing official services in the specified geographic area to submit an application for designation.

DATES: Applications must be postmarked or sent by telecopier (FAX) on or before October 1, 1993.

ADDRESSES: Applications must be submitted to Homer E. Dunn, Chief, Review Branch, Compliance Division, FGIS, USDA, room 1647 South Building, P.O. Box 96454, Washington, DC 20090–6454. Telecopier (FAX) users may send applications to the automatic telecopier machine at 202–720–1015, attention: Homer E. Dunn. If an application is submitted by telecopier, FGIS reserves the right to request an original application. All applications will be made available for public inspection at this address located at 1400 Independence Avenue, SW., during regular business hours.

FOR FURTHER INFORMATION CONTACT: Homer E. Dunn, telephone 202–720–8525.

SUPPLEMENTARY INFORMATION: This action has been reviewed and determined not to be a rule or regulation as defined in Executive Order 12291 and Departmental Regulation 1512–1; therefore, the Executive Order and Departmental Regulation do not apply to this action.

Section 7(f)(1) of the Act authorizes FGIS' Administrator to designate a qualified applicant to provide official services in a specified area after determining that the applicant is better able than any other applicant to provide such official services.

FGIS designated Alabama, main office located in Montgomery, Alabama, to provide official grain inspection services under the Act on March 1, 1991.

Section 7(g)(1) of the Act provides that designations of official agencies shall end not later than triennially and may be renewed according to the criteria and procedures prescribed in section 7(f) of the Act. The designation of Alabama ends on February 28, 1994.

The geographic area presently assigned to Alabama, pursuant to section 7(f)(2) of the Act, which will be assigned to the applicant selected for designation, is the entire State of Alabama, except those export port locations within the State.

Interested persons, including Alabama, are hereby given the opportunity to apply for designation to provide official inspection and Class X or Class Y weighing services in the geographic area specified above under the provisions of section 7(f) of the Act and § 800.196(d) of the regulations issued thereunder. Designation in the specified geographic area is for the period beginning March 1, 1994, and ending February 28, 1997. Persons wishing to apply for designation should contact the Compliance Division at the address listed above for forms and information.

Applications and other available information will be considered in

determining which applicant will be designated.

Authority: Pub. L. 94–582, 90 Stat. 2867, as amended (7 U.S.C. 71 *et seq.*).

Dated: August 26, 1993.

Neil E. Porter,

Director, Compliance Division.

[FR Doc. 93–21206 Filed 8–31–93; 8:45 am]

BILLING CODE 3410–EN–F

Request for Comments on the Applicants for Designation in the Geographic Areas Currently Assigned to the Decatur (IL) and McCrea (IA) Agencies, and the State of South Carolina (SC)

AGENCY: Federal Grain Inspection Service (FGIS).

ACTION: Notice.

SUMMARY: FGIS requests interested persons to submit comments on the applicants for designation to provide official services in the geographic areas currently assigned to Decatur Grain Inspection, Inc. (Decatur), John R. McCrea Agency, Inc. (McCrea), and the South Carolina Department of Agriculture (South Carolina).

DATES: Comments must be postmarked, or sent by telecopier (FAX) or electronic mail by October 1, 1993.

ADDRESSES: Comments must be submitted in writing to Homer E. Dunn, Chief, Review Branch, Compliance Division, FGIS, USDA, room 1647 South Building, P.O. Box 96454, Washington, DC 20090–6454. SprintMail users may respond to [A:ATTMAIL,O:USDA,ID:A36HDUNN]. ATTMAIL and FTS2000MAIL users may respond to !A36HDUNN. Telecopier (FAX) users may send comments to the automatic telecopier machine at 202–720–1015, attention: Homer E. Dunn. All comments received will be made available for public inspection at the above address located at 1400 Independence Avenue, SW., during regular business hours.

FOR FURTHER INFORMATION CONTACT: Homer E. Dunn, telephone 202–720–8525.

SUPPLEMENTARY INFORMATION: This action has been reviewed and determined not to be a rule or regulation as defined in Executive Order 12291 and Departmental Regulation 1512–1; therefore, the Executive Order and Departmental Regulation do not apply to this action.

In the June 30, 1993, **Federal Register** (58 FR 34983), FGIS asked persons interested in providing official services in the geographic areas assigned to Decatur, McCrea, and South Carolina to submit an application for designation. Applications were due by July 30, 1993. Decatur, McCrea, and South Carolina, the only applicants, each applied for the areas currently assigned to them. FGIS is publishing this notice to provide interested persons the opportunity to present comments concerning the applicants. Commenters are encouraged to submit reasons and pertinent data for support or objection to the designation of these applicants. All comments must be submitted to the Compliance Division at the above address.

Comments and other available information will be considered in making a final decision. FGIS will publish notice of the final decision in the **Federal Register**, and FGIS will send the applicants written notification of the decision.

Authority: Pub. L. 94–582, 90 Stat. 2867, as amended (7 U.S.C. 71 *et seq.*).

Dated: August 26, 1993.

Neil E. Porter,

Director, Compliance Division.

[FR Doc. 93–21207 Filed 8–31–93; 8:45 am]

BILLING CODE 3410–EN–F

Designation of the Mid-Iowa (IA) Agency and the State of Oregon

AGENCY: Federal Grain Inspection Service (FGIS), USDA.

ACTION: Notice.

SUMMARY: FGIS announces the designation of Mid-Iowa Grain Inspection, Inc. (Mid-Iowa), and the Oregon Department of Agriculture (Oregon).

EFFECTIVE DATE: October 1, 1993.

ADDRESSES: Homer E. Dunn, Chief, Review Branch, Compliance Division, FGIS, USDA, room 1647 South Building, P.O. Box 96454, Washington, DC 20090–6454.

FOR FURTHER INFORMATION CONTACT: Homer E. Dunn, telephone 202–720–8525.

SUPPLEMENTARY INFORMATION: This action has been reviewed and determined not to be a rule or regulation as defined in Executive Order 12291 and Departmental Regulation 1512–1; therefore, the Executive Order and Departmental Regulation do not apply to this action.

In the March 31, 1993, **Federal Register** (58 FR 16810), FGIS announced that the designations of Mid-Iowa and Oregon end on September 30, 1993, and asked persons interested in providing official services within the specified geographic areas to submit an application for designation. Applications were due by April 30, 1993.

Mid-Iowa and Oregon, the only applicants, each applied for the entire area currently assigned to them.

FGIS named and requested comments on the applicants for designation in the June 3, 1993, **Federal Register** (58 FR 31491). Comments were due by July 1, 1993. FGIS received one comment by the deadline. This comment was from a grain firm currently served by Oregon, and supported their redesignation.

FGIS evaluated all available information regarding the designation criteria in Section 7(f)(1)(A) of the Act; and according to section 7(f)(1)(B), determined that: Mid-Iowa and Oregon are able to provide official services in the geographic areas for which they applied. Effective October 1, 1993, and ending September 30, 1996, Mid-Iowa and Oregon are designated to provide official inspection services under the United States Grain Standards Act, as amended (Act) in the geographic areas specified in the March **Federal Register**. Interested persons may obtain official services by contacting Mid-Iowa at 319–363–0239 and Oregon at 503–276–0939.

Authority: Pub. L. 94–582, 90 Stat. 2867, as amended (7 U.S.C. 71 *et seq.*).

Dated: August 26, 1993.

Neil E. Porter,

Director, Compliance Division.

[FR Doc. 93–21205 Filed 8–31–93; 8:45 am]

BILLING CODE 3410–EN–F

Forest Service

Southern Region; Exemption From Appeal of the Decision for Suppression of Southern Pine Beetle Infestation on the Glenwood Ranger District of the Jefferson National Forest

AGENCY: Forest Service, USDA.

ACTION: Notice; exemption of decision from administrative appeal.

SUMMARY: Pursuant to 36 CFR 217.4(a)(11), the Regional Forester for the Southern Region has determined that good cause exists and notice is hereby given to exempt from administrative appeal the decision to suppress infestations of the southern pine beetle (SPB) on the Glenwood Ranger District of the Jefferson National Forest by the cut and remove method. The SPB populations have increased dramatically, resulting in damage to southern yellow and white pines on approximately 60 acres in 19 areas. The primary purpose of removing trees in these areas is to slow the spread of SPB, reduce public safety risks, and rapidly

salvage infested merchantable trees prior to excessive loss of value due to stain and decay. Approximately 500 MBF (thousand board feet) would result from this cut and remove operation. The treatment would involve the removal of all infested yellow pines and white pines (*Pinus strobus*) in the stands. The species of yellow pine include Virginia pine (*P. virginiana*), shortleaf pine (*P. echinata*), and pitch pine (*P. rigida*). Additionally, an area of unattacked pines (approximately 100 to 200 feet) around the infested trees will be removed. Removal of this "buffer strip" ensures the removal of freshly attacked pines that were overlooked or became infested after the spot was marked. The treatments will equate to group selections or small patch cuts in the areas dominated by pine. These patch cut areas will still contain a hardwood species component and are not expected to be totally cleared. Compartment/stands that fall into this category include: 3003/05, 3008/10&14, 3007/16, 3013/16, 3013/19, 3018/3, 3018/4, 3018/6, 3018/7, 3018/11, 3023/02, 3023/4&10&12, 3025/29, 3021/17, 3027/1, 3027/13&14. The largest patch cut area will be approximately six acres. Some areas contain a mix of hardwoods and pines. Treatments in these areas will resemble partial cuts. Compartment/stands that fall into this category include: 3008/01, 3010/29, 3010/32–3007/10. The largest partially cut area will be approximately 10 acres.

EFFECTIVE DATE: September 1, 1993.

FOR FURTHER INFORMATION CONTACT: Questions about this exemption should be directed to Jean P. Kruglewicz, Appeals and Litigation Group Leader, Southern Region, Forest Service-USDA, 1720 Peachtree Road, NW., Atlanta, GA 30367, (404) 347–4867.

SUPPLEMENTARY INFORMATION: The purpose of the SPB suppression treatments is threefold: (1) To slow the spread of this insect pest in the immediate area of the infestations; (2) reduce public safety risks where infested areas are adjacent to roads; and (3) to capture any value left in the dead and dying trees. Southern yellow pines are the preferred host of the SPB, but with rapidly building populations the SPB moves into nearby white pines (*Pinus strobus*). While white pines are generally less susceptible to SPB attacks, they are at risk when mixed with, or in close proximity to, infested yellow pines. Yellow pine is not a large species component on the Glenwood Ranger District; it exists most extensively on poor dry sites on mountain ridges which are typically unsuitable for timber production. These yellow pine stands, however, provide breeding grounds for the SPB, which then infest white pine trees in the adjacent valleys that are suitable for timber production. It is the white pine which we are the most concerned about protecting.

It is imperative that infested trees be removed as soon as possible to slow the spread of SPB. The adult beetles emerge in early spring, fly to new trees, bore into the new host trees and create galleries in the trees cambium, which eventually girdles and kills the tree. Blue stain fungi are also introduced by the beetles and accelerate tree death by blocking the vascular system of the tree. Beetle broods complete their development in about a month during the summer months and resulting in 5 to 7 generations per year. The warm summer temperatures also promote the rapid loss of timber value due to stain and decay.

This cut and remove treatment would involve the removal of all yellow pines and infested white pines in the stands. All eighteen (18) areas proposed for treatment are located on lands identified as suitable for timber production (Management Area 7), per the approved Jefferson National Forest Land and Resource Management Plan (as amended).

Two areas proposed for suppression are located within or contain riparian areas. The purpose for suppression in these areas would be strictly limited to protection of the riparian dependent resource of visual quality and reduction of public safety hazards. Appropriate mitigations as outlined in the Forest Land and Resource Management Plan (Forest Plan) regarding riparian areas will be followed. This proposal regarding riparian areas is consistent with Forest Plan direction found on pages IV–102–103, IV–79, Appendix I, and IV–96.

Only areas with easy access have been proposed for treatment which should enable these areas to be logged economically. Rehabilitation practices will be disclosed in the environmental documents and may include practices such as, site preparation, slash disposal, and reforestation, depending on stand conditions and resource objectives. The District Ranger is the responsible official. The environmental analysis is currently being done. The decision will likely be documented in either a Decision Memo (per the Forest Service Environmental Policy and Procedures Handbook, Section 31.2) or Decision Notice. The analysis will include methods of harvest, mitigation measures, and any post salvage rehabilitation practices.

Time is of the essence for this project. It is imperative that all identified SPB infested areas be treated and the trees removed as soon as possible to slow the spread of SPB to adjacent pine trees and stands of pine trees, and expedite the salvage of merchantable timber.

Dated: August 26, 1993.

Ralph F. Mumme,

Acting Regional Forester.

[FR Doc. 93–21215 Filed 8–31–93; 8:45 am]

BILLING CODE 3410–11–M

Exemption From Appeal; Anderson Mill Personal Use Charge Firewood, Targhee National Forest, Idaho

AGENCY: Forest Service, USDA.

ACTION: Notice of exemption from appeal.

SUMMARY: This is notification that the Anderson Mill Personal Use Charge Firewood Area, Ashton Ranger District, Targhee National Forest, is exempt from appeal in accordance with 36 CFR 217.4(a)(11).

DATES: Effective on September 1, 1993.

FOR FURTHER INFORMATION CONTACT: Skip Hurt, Zone FMO, Ashton Ranger District, Targhee National Forest, P.O. Box 858, Ashton, Idaho 83420, Telephone: 208–652–7442.

SUPPLEMENTARY INFORMATION: In compliance with the Forest LMP, personal use firewood will be provided and fuels will be reduced to limit the fire hazard and spread potential of wildfire. The project will harvest dead lodgepole pine and a limited amount of Douglas-fir firewood in the vicinity of Anderson Mill Canyon located approximately 6 miles north of Ashton, ID. Firewood harvesting will take place in designated timber stands within the assessment area. The assessment area is composed of 5,031 acres; within this area, harvest units comprise about 363 acres. Unit sizes vary from about 40 acres to 2 acres. The following roads are located within this area and they provide access to the lodgepole pine timber stands designated for firewood harvest.

	Miles
Forest Road 164 Anderson Mill Canyon Road	6.5
Forest Road 512 East-West Road	3.1
Forest Road 516 Anderson Mill Spur 2 Road	1.9
Forest Road 522 Anderson Mill Spur 1 Road	1.2
Forest Road 729 Anderson Mill Spur 5 Road	0.8

	Miles
Forest Road 730 Anderson Mill Spur 6 Road	1.3
Total	14.8

There will be no road construction in this project.

The assessment area lies within the Caldera Management Area (MA 10) and these sections: T. 10N., R. 43E., Sec. 14, 15, 21, 22, 23, 26, 27, 28, 33, 34, and 35. The area lies to the north and east of road junction FR 164/561, and is west of the Upper Mesa Falls on the Henrys Fork of the Snake River. See attached map.

The decision for the Anderson Mill Personal Use Firewood Project may be implemented after publication of this notice in the **Federal Register** and after the decision has been signed by the responsible official. If the project were delayed by an appeal (delays of up to 150 days are possible), the firewood would not be available for harvest before winter snows block access to the project area. This would result in a loss of volume and value of the firewood due to deterioration. Additionally, the volume of firewood currently available for harvest is not sufficient to meet public demand for the rest of this season. Pursuant to 36 CFR 217.4(a)(11), it is my decision to exempt the Anderson Mill Personal Use Charge Firewood Project, Ashton Ranger District, Targhee National Forest, from appeal. The decision memo discloses the effects of the proposed actions on the environment and addresses issues resulting from the proposal.

Dated: August 25, 1993.

Gray Reynolds,

Regional Forester, Intermountain Region, USDA Forest Service.

[FR Doc. 93-21216 Filed 8-31-93; 8:45 am]

BILLING CODE 3410-11-M

Exemption From Appeal, Sheep Falls Personal Use Charge Firewood, Targhee National Forest, Idaho

AGENCY: Forest Service, USDA.

ACTION: Notice of exemption from appeal.

SUMMARY: This is notification that the Sheep Falls Personal Use Charge Firewood Area, Ashton Ranger District, Targhee National Forest, is exempt from appeal in accordance with 35 CFR 217.4(a)(11).

DATES: Effective on September 1, 1993.

FOR FURTHER INFORMATION CONTACT: Skip Hurt, Zone FMO, Ashton Ranger District, Targhee National Forest, P.O. Box 858, Ashton, Idaho 83420, Telephone: 208-652-7442.

SUPPLEMENTARY INFORMATION: In compliance with the Forest LMP, personal use firewood will be provided and fuels will be reduced to limit the fire hazard and spread potential of wildfire. The project will harvest dead lodgepole pine firewood in the vicinity of Sheep Falls and Lookout Butte located approximately 9 miles north of Ashton, ID. Firewood harvesting will take place in designated timber stands within the assessment area. The assessment area is composed of 3,498 acres; within this area, harvest units comprise about 457 acres. Unit sizes vary from about 200 acres to 20 acres. The following roads are located within this area and provide access to the lodgepole pine timber stands designated for firewood harvest.

	Miles
Forest Road 701 West Hatchery Ford Road	1.0
Forest Road 163 Sheep Falls Road	3.8
Forest Road 735 Sheep Falls Spur 1 Road	0.8
Forest Road 760 Sheep Falls Trail Head Road	0.3
Total	14.8

There will be no road construction in this project.

The assessment area lies within the Caldera Management Area (MA 10) and these sections: T. 11N., R. 42 & 43E., Sections 1, 6, 7, 8, 12, 13, 17 and 18, Boise Meridian. The area lies to the east of Highway 20 and west of Sheep Falls on the Henry's Fork of the Snake River.

The decision for the Sheep Falls Personal Use Firewood Project may be implemented after publication of this notice in the **Federal Register** and after the decision document has been signed by the responsible official. If the project were delayed by an appeal (delays of up to 150 days are possible), the firewood would not be available for harvest before winter snows block access to the project area. This would result in a loss of volume and value of the firewood due to deterioration. Additionally, the volume of firewood currently available for harvest is not sufficient to meet public demand for the rest of this section. Pursuant to 36 CFR 217.4(a)(11), it is my decision to exempt the Sheep Falls Personal Use Charge Firewood Project, Ashton Ranger District, Targhee National Forest, from appeal. The decision memo discloses the effects of the proposed action on the environment and addresses issues resulting from the proposal.

Dated: August 25, 1993.

Gary F. Reynolds,

Regional Forester, Intermountain Region, USDA-Forest Service.

[FR Doc. 93-21217 Filed 8-31-93; 8:45 am]

BILLING CODE 3410-11-M

Soil Conservation Service

Cedar Run Watershed, Fauquier County, Virginia

AGENCY: Soil Conservation Service, U.S.D.A.

ACTION: Notice of a finding of no significant impact.

SUMMARY: Pursuant to section 102(2)(C) of the National Environmental Policy Act of 1969; the Council on Environmental Quality Guidelines (40 CFR part 1500); and the Soil Conservation Service Guidelines (CFR part 650); the Soil Conservation Service, U.S. Department of Agriculture, gives notice that an Environmental Impact Statement is not being prepared for the Cedar Run Watershed—Multiple Purpose Structure Site 6 in Fauquier County, Virginia.

FOR FURTHER INFORMATION CONTACT: Mr. George C. Norris, State Conservationist, USDA, Soil Conservation Service, Culpeper Building, suite 209, 1606 Santa Rosa Road, Richmond, Virginia 23229-5014, telephone (804) 287-1691.

SUPPLEMENTARY INFORMATION: The Environmental Assessment of this federally assisted action indicates that the project will not cause significant local, regional, or national impacts on the environment. As a result of these findings, Mr. George C. Norris, State Conservationist, has determined that the preparation and review of an Environmental Impact Statement are not needed for this project.

The project purposes are flood control and municipal and industrial water supply. The planned works of improvement include the installation of a combination roller compacted concrete and earth fill multiple purpose flood control and water supply structure approximately 1,000 feet upstream of the Auburn Bridge at Route 602 in Fauquier County, Virginia.

The Notice of Finding of No Significant Impact (FONSI) has been forwarded to the Environmental Protection Agency and to various Federal, State and local agencies and interested parties. A limited number of copies of the FONSI are available to fill single-copy requests at the above address. Basic data developed during the Environmental Assessment are on file and may be reviewed by contacting

Mr. George C. Norris, State Conservationist.

No administrative action on implementation of the proposal will be taken until 30 days after the date of this publication in the **Federal Register**.

(This activity is listed in the Catalog of Federal Domestic Assistance under No. 10.901, Watershed and Flood Prevention, and is subject to the provisions of Executive Order 12372, which requires intergovernmental consultation with State and local officials)

George C. Norris,

State Conservationist.

[FR Doc. 93-21175 Filed 8-31-93; 8:45 am]

BILLING CODE 3410-16-M

DEPARTMENT OF COMMERCE

Agency Form Under Review by the Office of Management and Budget

DOC has submitted to the Office of Management and Budget (OMB) for clearance the following proposal for collection of information under the provisions of the Paperwork Reduction Act (44 U.S.C. chapter 35).

Agency: Bureau of the Census.

Title: Data Users Evaluation Survey.

Form Number(s): Various.

Agency Approval Number: 0607-0760.

Type of Request: Extension of a currently approved collection.

Burden: 3,500 hours.

Number of Respondents: 7,000.

Avg Hours Per Response: 30 minutes.

Needs and Uses: The Census Bureau is requesting an extension of the generic clearance to conduct customer surveys in order to continue to promote their optimal use and to encourage focused and effective improvements to the quality of Census Bureau products and services. OMB approved our initial request for generic clearance on November 16, 1992. The clearance is administered jointly by the Bureau Forms Clearance Officer and a member of the Work Force Development and Quality Management Office (QMO). Offices desiring a clearance submit a request to the Forms Clearance Officer who reviews the request jointly with the QMO member. The Forms Clearance Officer forwards approved requests to the Office of the Under Secretary, Economic and Statistics Administration, for final approval. We provide OMB with a copy of questionnaires and materials in advance of any data collection activity.

Affected Public: Individuals or households, state or local governments, farms, businesses or other for-profit organizations, Federal agencies or employees, non-profit institutions, small businesses or organizations.

Frequency: On occasion.

Respondent's Obligation: Voluntary.

OMB Desk Officer: Maria Gonzalez, (202) 395-7313.

Copies of the above information collection proposal can be obtained by calling or writing Edward Michals, DOC Forms Clearance Officer, (202) 482-3271, Department of Commerce, room 5312, 14th and Constitution Avenue, NW, Washington, DC 20230.

Written comments and recommendations for the proposed information collection should be sent to Maria Gonzalez, OMB Desk Officer, room 3208, New Executive Office Building, Washington, DC 20503.

Dated: August 25, 1993.

Edward Michals,

Departmental Forms Clearance Officer, Office of Management and Organization.

[FR Doc. 93-21229 Filed 8-31-93; 8:45 am]

BILLING CODE 3510-07-F

Agency Form Under Review by the Office of Management and Budget

DOC has submitted to the Office of Management and Budget (OMB) for clearance the following proposal for collection of information under the provisions of the Paperwork Reduction Act (44 U.S.C. chapter 35).

Agency: Bureau of the Census.

Title: 1994 National Census Test I (Coverage Test).

Form Number(s): DF-1A, DF-1B, DF-1C, DF-17.

Agency Approval Number: None.

Type of Request: New collection.

Burden: 6,734 hours.

Number of Respondents: 86,300.

Avg Hours Per Response: 12 minutes.

Needs and Uses: The Census Bureau plans to conduct the Coverage Test as another in a series of National Census Tests. The National Census Tests are part of a program of research and development to assist in formulating policy and design options for the Year 2000 Decennial Census of Population and Housing. The Coverage Test seeks to examine how the Census Bureau could improve application of the current set of residence rules for the next decennial census. The proposed test is designed to determine the best means for imroving the respondent's ability to understand and correctly complete the household roster information requested. The survey will measure the extend to which various questionnaire designs, such as differing placements and approaches to the coverage and roster questions, affect within-household coverage. The survey will also measure relationships between questionnaire design and mail response to respondent-administered forms.

Affected Public: Individuals or households.

Frequency: One time only.

Respondent's Obligation: Mandatory.

OMB Desk Officer: Maria Gonzalez, (202) 395-7313.

Copies of the above information collection proposal can be obtained by calling or writing Edward Michals, DOC Forms Clearance Officer, (202) 482-3271, Department of Commerce, room 5312, 14th and Constitution Avenue, NW, Washington, DC 20230.

Written comments and recommendations for the proposed information collection should be sent to Maria Gonzalez, OMB Desk Officer, room 3208, New Executive Office Building, Washington, DC 20503.

Dated: August 26, 1993.

Edward Michals,

Departmental Forms Clearance Officer, Office of Management and Organization.

[FR Doc. 93-21230 Filed 8-31-93; 8:45 am]

BILLING CODE 3510-07-F

Bureau of Export Administration

[Docket No. 920363-3220]

Foreign Availability Determination for "Digital Computers" Controlled by ECCN 4A03A Having a "Composite Theoretical Performance" Not Exceeding 67 Million Theoretical Operations Per Second

AGENCY: Bureau of Export Administration, Commerce.

ACTION: Notice of positive determination.

SUMMARY: On August 3, 1993, the Acting Assistant Secretary for Export Administration made a determination that foreign availability to controlled destinations exists, within the meaning of section 5(f) of the Export Administration Act (EAA) and 15 CFR part 791 of the Export Administration Regulations (EAR), for "digital computers" controlled by ECCN 4A03A having a "composite theoretical performance" ("CTP") not exceeding 67 million theoretical operations per second (Mtops).

The Bureau of Export Administration (BXA) will publish appropriate changes in the validated export license requirements for these computers in future issues of the **Federal Register**.

FOR FURTHER INFORMATION CONTACT: Steven C. Goldman, Director, Office of Foreign Availability, Bureau of Export Administration, Department of Commerce, Telephone: (202) 482-0074

SUPPLEMENTARY INFORMATION:

Background

Section 5(f)(3) of the EAA (50 U.S.C. 2401 *et seq.*) and 15 CFR part 791 of the EAR set forth the procedures and criteria for determining the foreign availability of items controlled for national security reasons. The Secretary of Commerce, or the Secretary's designee, is authorized to determine whether foreign availability exists.

With limited exceptions, the Department of Commerce may not maintain national security controls on exports of an item to countries when the Department determines that items of comparable quality are available in fact to such countries from foreign sources in quantities sufficient to render the controls ineffective in achieving their purpose.

On March 26, 1993, the Office of Foreign Availability (OFA) initiated a foreign availability assessment of "digital computers" controlled by ECCN 4A03A and having a "composite theoretical performance" ("CTP") exceeding 12.5 million theoretical operations per second (Mtops). The assessment was initiated in response to a claim filed with OFA pursuant to part 791 of the EAR. The Department published a notice of the initiation of the assessment in the **Federal Register** on April 21, 1993 (58 FR 21440).

On August 3, 1993, the Acting Assistant Secretary, having considered the assessment and other relevant information provided by OFA, determined that foreign availability exists to controlled destinations within the meaning of section 5(f) of the EAA and part 791 of the EAR for "digital computers" controlled by ECCN 4A03A having a "composite theoretical performance" ("CTP") not exceeding 67 million theoretical operations per second (Mtops). The Department provided all interested agencies an opportunity to review and comment on the assessment and determination.

The Bureau of Export Administration (BXA) intends to publish a rule in the **Federal Register** in the near future that will remove national security-based validated export license requirements for exports to most non-controlled destinations (i.e., Country Groups T and V, except the People's Republic of China) of "digital computers" controlled by ECCN 4A03A consistent with this foreign availability determination. Effective with the publication of that rule, these computers will be eligible for export to most Country Group T and V destinations under General License GFW.

Following multilateral review of a U.S. proposal by the Coordinating Committee for Multilateral Export Controls (COCOM), the Department will take appropriate action, consistent with the provisions of section 5(f)(3) of the EAA and § 791.7 of the EAR, to remove national security-based validated license requirements for exports to controlled destinations.

Dated: August 26, 1993.

Iain S. Baird,

Acting Assistant Secretary for Export Administration.

[FR Doc. 93–21204 Filed 8–27–93; 12:04 pm]

BILLING CODE 3510–DT–M

Economic Development Administration

Senior Executive Service Performance Review Board; Membership

Below is a listing of individuals who are eligible to serve on the Performance Review Board in accordance with the Economic Development Administration Senior Executive Service (SES) Performance Appraisal System:

Edward G. Jeep
John E. Corrigan
Charles E. Oxley
Craig M. Smith
Gerald R. Lucas—O/S, OCR

H. James Reese,

Executive Secretary, Economic Development Administration, Performance Review Board.

[FR Doc. 93–21171 Filed 8–31–93; 8:45 am]

BILLING CODE 3510–BS–M

Economics and Statistics Administration

Senior Executive Service Performance Review Board; Membership

Below is a listing of individuals who are eligible to serve on the Performance Review Board in accordance with the Economics and Statistics Administration Senior Executive Service (SES) Performance Appraisal System:

Harry A. Scarr
O. Bryant Benton
William P. Butz
Charles A. Waite
Robert D. Tortora
Charles D. Jones
Carol S. Carson
John S. Landefeld
John E. Cremeans
Frederick T. Knickerbocker
Johnathan C. Menes
Henry P. Misisco
Katherine K. Wallman

H. James Reese,

Executive Secretary, Economics and Statistics Administration, Performance Review Board.

[FR Doc. 93–21172 Filed 8–31–93; 8:45 am]

BILLING CODE 3510–BS–M

International Trade Administration

Export Trade Certificate of Review

ACTION: Notice of Issuance of an Amended Export Trade Certificate of Review, Application No. 87–4A001.

SUMMARY: The Department of Commerce has issued an amendment to the Export Trade Certificate of Review granted to the American Film Marketing Association ("AFMA") on April 10, 1987. Notice of issuance of the Certificate was published in the **Federal Register** on April 17, 1987 (52 FR 12578).

FOR FURTHER INFORMATION CONTACT: Jude Kearney, Acting Director, Office of Export Trading Company Affairs, International Trade Administration, (202) 482–5131. This is not a toll-free number.

SUPPLEMENTARY INFORMATION: Title III of the Export Trading Company Act of 1982 (15 U.S.C. sections 4001–21) authorizes the Secretary of Commerce to issue Export Trade Certificates of Review. The regulations implementing Title III are found at 15 CFR part 325 (1991) (50 FR 1804, January 11, 1985).

The Office of Export Trading Company Affairs is issuing this notice pursuant to 15 CFR 325.6(b), which requires the Department of Commerce to publish a summary of a Certificate in the **Federal Register**. Under Section 305(a) of the Act and 15 CFR 325.11(a), any person aggrieved by the Secretary's determination may, within 30 days of the date of this notice, bring an action in any appropriate district court of the United States to set aside the determination on the ground that the determination is erroneous.

Description of Amended Certificate

Export Trade Certificate of Review No. 87–00001, was issued to the American Film Marketing Association ("AFMA") on April 10, 1987 (52 FR 12578, April 17, 1987) and previously amended on March 25, 1988 (53 FR 10267, March 30, 1988), August 29, 1989 (54 FR 36848, September 5, 1989), and November 5, 1991 (56 FR 57515, November 12, 1991).

AFMA's Export Trade Certificate of Review has been amended to:

1. Add each of the following companies as a "Member" within the meaning of § 325.2(1) of the Regulations

(15 CFR 325.2(1)): Cinevest Entertainment, New York, NY; Gel Distribution, Los Angeles, CA; Grand AM Ltd., Van Nuys, CA; I.R.S. Media International, Universal City, CA; Miramax International, Los Angeles, CA; Melrose Entertainment, Inc., Beverly Hills, CA; Moonstone Entertainment, Beverly Hills, CA; Motion Picture Corporation of America, Santa Monica, CA; Republic Pictures International, Los Angeles, CA; Spelling Films International, Los Angeles, CA; Starway International Corporation, Los Angeles, CA; Trimark Pictures, Santa Monica, CA; and Turner Pictures Worldwide, Los Angeles, CA.

2. Delete each of the following companies as a "Member" of the Certificate: Filmstar, Inc.; Filmtrust Motion Picture Licensing; Films Around the World, Inc.; GPD, Inc.; Intercontinental Releasing Corp.; International Film Exchange; MGM/UA Entertainment Company; Nelson Entertainment, Inc.; Orion Pictures Int'l.; SC Entertainment International; Silverstein Int'l. Corp.; Skouras Pictures, Inc.; Sovereign Pictures, Inc.; Sugar Entertainment Inc.; Sunny Film Corporation SDN BHD; Titan International Licensing, N.V.; Tom Parker Motion Pictures; Transcontinental Pic. Ind.; and Weintraub Entertainment Group.

3. Change the listing of the company name of the following current "Members" as follows: change AIP Studios to West Side Studios; Alice Entertainment, Inc. to Alice Entertainment, Inc./Kidpix Entertainment, Inc.; American First Run to American First Run Studios/Zantar; Beyond International Groups to Beyond Films, Ltd.; Broadstar International to Broadstar Entertainment Corporation; Carolco Pictures to Carolco Service, Inc.; Cinetelfilms, Inc. to Cinetel Films, Inc.; Concorde/Motion Picture Corporation to Concord—New Horizons Corporation; Cori Films International to Cori International: Film & Television; Curb/Esquire Films to Curb Organization; Dino De Laurentiis Communications Inc. to Dino De Laurentiis Communications; Double Helix Films, Inc. to Double Helix Films; Hemdale Film Corp. to Hemdale Communications, Inc.; Image Organization to Image Organization, Inc.; Imperial Entertainment to Imperial Entertainment B.V.; ITC Entertainment, Inc. to ITC Entertainment Group; Kings Road International to Kings Road Entertainment, Inc.; Kodiak Films, Inc. to Big Bear Licensing Corporation; Lone Star Pictures to Lone Star Pictures International, Inc.; Peregrine Film Dist., Inc. to Lway Productions; M.C.E.G. Virgin Vision Ltd. to MCEG Sterling Entertainment; Manley Productions to Manley Productions, Inc.; Miracle Films, Inc. to Film World Entertainments/Miracle Films; Morgan Creek International to Morgan Creek International, Inc.; The Movie Group to The Movie Group, Inc.; Noble Productions to Noble Productions, Inc./Noble Film; Norkat Co. Ltd. to The Norkat Company Limited; Odyssey/Cinecom Int'l to Odyssey Distributors, Ltd.; Omega Entertainment to Omega Entertainment, Ltd.; Pentamerica Communications, Inc. to Penta International, Ltd.; Promark Entertainment to Promark Entertainment Group; Reel Movies International to Reel Movies International, Inc.; Saban International to Saban Pictures International; Trans Atlantic Distribution, L.P. to Trans Atlantic Entertainment/I.R.S.; and Viacom Pictures, Inc. to Viacom Pictures/Showtime Networks.

Corrections

In addition to the changes in the original **Federal Register** Notice to this amendment (58 FR 31942, June 7, 1993), the following AFMA members were deleted: Media Home Entertainment; Scotti Brothers Pictures; Telefilm Canada; and Universal City Studios, Inc.

A copy of the amended certificate will be kept in the International Trade Administration's Freedom of Information Records Inspection Facility, room 4102, U.S. Department of Commerce, 14th Street and Constitution Avenue, NW., Washington, DC 20230.

Dated: August 26, 1993.

Jude Kearney,

Acting Director, Office of Export Trading Company Affairs.

[FR Doc. 93–21234 Filed 8–31–93; 8:45 am]

BILLING CODE 3510–DR–M

National Telecommunications and Information Administration

Performance Review Board; Membership

Below is a listing of individuals who are eligible to serve on the Performance Review Board in accordance with the National Telecommunications and Information Administration Senior Executive Service (SES) Performance Appraisal System:

Michele C. Farquhar
William F. Maher, Jr.
Richard D. Parlow
Charles M. Rush
Neal B. Seitz
Stephen C. Browning

H. James Reese,

Executive Secretary, National Telecommunications and Information Administration Performance Review Board.

[FR Doc. 93–21173 Filed 8–31–93; 8:45 am]

BILLING CODE 3510–BS–M

COMMITTEE FOR THE IMPLEMENTATION OF TEXTILE AGREEMENTS

Adjustment of Import Limits for Certain Cotton and Man-Made Fiber Textile Products Produced or Manufactured in China

August 26, 1993.

AGENCY: Committee for the Implementation of Textile Agreements (CITA).

ACTION: Issuing a directive to the Commissioner of Customs adjusting limits.

EFFECTIVE DATE: August 27, 1993.

FOR FURTHER INFORMATION CONTACT: Janet Heinzen, International Trade Specialist, Office of Textiles and Apparel, U.S. Department of Commerce, (202) 482–4212. For information on the quota status of these limits, refer to the Quota Status Reports posted on the bulletin boards of each Customs port or call (202) 927–6703. For information on embargoes and quota re-openings, call (202) 482–3715.

SUPPLEMENTARY INFORMATION:

Authority: Executive Order 11651 of March 3, 1972, as amended; section 204 of the Agricultural Act of 1956, as amended (7 U.S.C. 1854).

The current limits for Categories 226, 239, 314, 331, 351 and 635 are being increased by application of swing, reducing the limit for Category 607 to account for the increases.

A description of the textile and apparel categories in terms of HTS numbers is available in the CORRELATION: Textile and Apparel Categories with the Harmonized Tariff Schedule of the United States (see **Federal Register** notice 57 FR 54976, published on November 23, 1992). Also see 57 FR 62304, published on December 30, 1992.

The letter to the Commissioner of Customs and the actions taken pursuant to it are not designed to implement all of the provisions of the bilateral agreement, but are designed to assist

only in the implementation of certain of its provisions.

Rita D. Hayes,

Chairman, Committee for the Implementation of Textile Agreements.

Committee for the Implementation of Textile Agreements

August 26, 1993.

Commissioner of Customs,

Department of the Treasury, Washington, DC 20229.

Dear Commissioner: This directive amends, but does not cancel, the directive issued to you on December 23, 1992, by the Chairman, Committee for the Implementation of Textile Agreements. That directive concerns imports of certain cotton, wool, man-made fiber, silk blend and other vegetable fiber textiles and textile products, produced or manufactured in China and exported during the twelve-month period which began on January 1, 1993 and extends through December 31, 1993.

Effective on August 27, 1993, you are directed to amend further the directive dated December 23, 1992 to adjust the limits for the following categories, as provided under the terms of the current bilateral agreement between the Governments of the United States and the People's Republic of China:

Category	Adjusted twelve-month limit [1]
Levels not in a group:	
226	9,950,203 square meters.
239	2,710,912 kilograms.
314	46,197,886 square meters.
331	4,817,790 dozen pairs.
351	482,343 dozen.
607	589,758 kilograms.
635	596,621 dozen.

[1] The limits have not been adjusted to account for any imports exported after December 31, 1992.

The Committee for the Implementation of Textile Agreements has determined that these actions fall within the foreign affairs exception to the rulemaking provisions of 5 U.S.C. 553(a)(1).

Sincerely,

Rita D. Hayes,

Chairman, Committee for the Implementation of Textile Agreements.

[FR Doc. 93-21233 Filed 8-31-93; 8:45 am]

BILLING CODE 3510-DR-F

DEPARTMENT OF ENERGY

Federal Energy Regulatory Commission

[Docket Nos. ER93-737-000, et al.]

The Montana Power Co., et al.; Electric Rate, Small Power Production, and Interlocking Directorate Filings

August 25, 1993.

Take notice that the following filings have been made with the Commission:

1. The Montana Power Company

[Docket No. ER93-737-000]

Take notice that on July 30, 1993, The Montana Power Company (Company) tendered for filing a reconciliation of certain cost-of-service information previously submitted in conjunction with its application for a wholesale rate increase in this proceeding with cost data contained in its 1992 FERC Form No. 1, and a Statement BM—Construction Program Statement in support of its proposal to collect rates based on inclusion of construction work in progress in its rate base.

Comment date: September 7, 1993, in accordance with Standard Paragraph E at the end of this notice.

2. Pennsylvania Power & Light Company

[Docket No. ER93-878-000]

Take notice that on August 18, 1993, Pennsylvania Power & Light Company (PP&L), tendered for filing a Third Supplement, dated as of August 12, 1993, (Third Supplemental Agreement), to the Capacity Credit Sales Agreement, dated May 28, 1991, between PP&L and Atlantic City Electric Company, which is on file with the Commission as PP&L's Rate Schedule FERC No. 106. The Third Supplemental Agreement provides for a revised Installed Capacity Rate under the Agreement to reflect a revision in the rate for contract capacity under the Pennsylvania-New Jersey-Maryland Interconnection Agreement which was accepted for filing by the Commission on May 11, 1993, in Docket No. ER93-508-000.

PP&L requests waiver of the notice requirements of section 205 of the Federal Power Act and § 35.3 of the Commission's Regulations so that the proposed rate schedule can be made effective as of June 1, 1993.

PP&L states that a copy of its filing was served on Atlantic City Electric Company, the Pennsylvania Public Utility Commission, and the New Jersey Board of Regulatory Commissioners.

Comment date: September 8, 1993, in accordance with Standard Paragraph E at the end of this notice.

3. Wisconsin Electric Power Company

[Docket No. ER93-869-000]

Take notice that on August 16, 1993, Wisconsin Electric Power Company (Wisconsin Electric), tendered for filing revisions to Exhibit B of the Power Sales Agreement and Conjunctive Transmission Service Agreement between itself and The Wisconsin Public Power Inc. SYSTEM (WPPI). The revision acknowledges a change in WPPI's City of Hartford Delivery Point (Hartford) voltage from 26.4 kV to 138 kV. As a result of the voltage change, Wisconsin Electric's revenues for Conjunctive Firm Power Service will decrease about $53,700 annually at WPPI's current Contract Year Demand Nomination of 145 MW.

Wisconsin Electric respectfully requests an effective date of October 1, 1993. Wisconsin Electric is authorized to state that WPPI joins in the requested effective date.

Copies of the filing have been served on WPPI and the Public Service Commission of Wisconsin.

Comment date: September 8, 1993, in accordance with Standard Paragraph E at the end of this notice.

4. The Montana Power Company

[Docket No. ER93-882-000]

Take notice that on August 20, 1993, The Montana Power Company (Montana) tendered for filing with the Federal Energy Regulatory Commission pursuant to 18 CFR 35.13 a Supplement to Rate Schedule FERC No. 175, the General Transfer Agreement Between The Montana Power Company and the Bonneville Power Administration (Bonneville). This Supplement is comprised of a Contribution in Aid of Construction Agreement between Montana and Bonneville. Montana requests that the Commission (a) accept the Supplement for filing, to be effective on August 23, 1993; and (b) grant a waiver of notice pursuant to 18 CFR 35.11, so as to allow the filing of the Agreement less than 60 days prior to the date on which service under the Agreement is to commence.

A copy of the filing was served upon Bonneville Power Administration.

Comment date: September 8, 1993, in accordance with Standard Paragraph E at the end of this notice.

5. Midwest Power Systems Inc.

[Docket No. ER93-881-000]

Take notice that on August 20, 1993, Midwest Power Systems Inc. (MPSI) tendered for filing an amendment to Transmission Service Agreement whereby Iowa Public Service Company (IPS), n/k/a Midwest Power Systems

Inc. (MPSI), provides Cedar Falls Utilities (CFU) with transmission service for CFU's share of power and energy from Council Bluffs Energy Center Unit No. 3.

On January 18, 1980, FERC accepted for filing (Docket No. ER80–92) and designated Rate Schedule FERC No. 63 for the Transmission Service Agreement (Agreement) between Cedar Falls Utilities (CFU) and Iowa Public Service Company (IPS), n/k/a Midwest Power Systems Inc. (MPSI). That filing was redesignated from IPS FERC No. 63 to MPSI Rate Schedule FERC No. 38 in Docket No. ER92–784–000 on October 23, 1992.

Pursuant to the Agreement, originally dated October 2, 1979 and amended on July 15, 1980, MPSI provides transmission service to CFU for its share of power and energy from Council Bluffs Energy Center Unit. No. 3. Article 2–4 of the Agreement requires CFU to reimburse MPSI for the cost of operation and maintenance and a transmission facilities charge, all as specified in the Agreement as filed with the Commission.

Subsequent to the approval of the initial rate for 1979 (Supplement No. 2 to Rate Schedule No. 63), IPS filed two amendments to update the fixed charge rate for transmission service. On November 18, 1980, FERC accepted for filing Amendment No. 1 (Docket No. ER80–728) and designated Supplement No. 8 to Rate Schedule No. 63, the updated fixed charge rate for 1980. On February 10, 1982, FERC accepted for filing Amendment No. 2 (Docket No. ER82–194–000) and designated Supplement No. 11 to Rate Schedule No. 63, the updated fixed charge rate for 1981.

Subsequent to the approval by FERC of the 1981 fixed charge rate, no further updated filings were made with the Commission. Instead, IPS simply billed CFU the annual charges for each year as calculated pursuant to the Agreement. Because all charges were calculated pursuant to the Agreement, IPS (and later MPSI) believed no filing was necessary to implement the terms of the Agreements.

However, on July 30, 1993, the Commission issued its "Final Order" in Docket No. PL93–2–002, "Prior Notice and Filing Requirements," clarifying that rate changes must be filed even when the change is prescribed by a contract on file with the Commission. The Final Order also established an amnesty period during which such filings can be brought up to date.

Pursuant to § 35.11 of the Commission's regulations, MPSI is requesting a waiver of the Commission's rules so that the annual fixed charges may be accepted without notice for the years 1982 through 1992. MPSI is requesting this waiver as an uncontested filing of a rate change that was prescribed by a contract on file with the Commission. Thus, this filing qualifies for a waiver under Central Hudson Gas & Electric Corporation, et al., 60 FERC, paragraph 61, 106, reh'g denied, 61 FERC, paragraph 61, 089 (1992), as modified by the Final Order, pp. 21–25.

MPSI states that copies of this filing were served on Cedar Falls Utilities and the Iowa Utilities Board.

Comment date: September 8, 1993, in accordance with Standard Paragraph E at the end of this notice.

6. The Cincinnati Gas & Electric Company

[Docket No. ER93–879–000]

Take notice that on August 19, 1993, The Cincinnati Gas & Electric Company (CG&E), tendered for filing an Interconnection Agreement with the Wabash Valley Power Association, Inc.

The Interconnection Agreement proposes interchange service schedules for emergency service, interchange power, short-term power and limited term power. The Agreement is proposed to be made effective sixty days after filing. Copies of the Agreement were served upon The Public Utilities Commission of Ohio and Wabash Valley Power Association.

Comment date: September 8, 1993, in accordance with Standard Paragraph E at the end of this notice.

Standard Paragraphs

E. Any person desiring to be heard or to protest said filing should file a motion to intervene or protest with the Federal Energy Regulatory Commission, 825 North Capitol Street, NE., Washington, DC 20426, in accordance with Rules 211 and 214 of the Commission's Rules of Practice and Procedure (18 CFR 385.211 and 385.214). All such motions or protests should be filed on or before the comment date. Protests will be considered by the Commission in determining the appropriate action to be taken, but will not serve to make protestants parties to the proceeding. Any person wishing to become a party must file a motion to intervene. Copies of this filing are on file with the Commission and are available for public inspection.

Lois D. Cashell,

Secretary.

[FR Doc. 93–21201 Filed 8–31–93; 8:45 am]

BILLING CODE 6717–01–M

[Docket Nos. CP93–639–000, et, al.]

Arkla Energy Resources Co. et al.; Natural Gas Certificate Filings

August 24, 1993.

Take notice that the following filings have been made with the Commission:

1. Arkla Energy Resources Company

[Docket No. CP93–639–000]

Take notice that on August 12, 1993, Arkla Energy Resources Company (AER), 525 Milam Street, P.O. Box 21734, Shreveport, Louisiana 71151 filed in Docket No. CP93–639–000 a request pursuant to §§ 157.205, 157.211 and 157.212 of the Commission's Regulations under the Natural Gas Act for authorization to operate certain facilities in Arkansas, under its blanket certificate issued in Docket No. CP82–384–000 and CP82–384–001, all as more fully set forth in the request which is on file with the Commission and open to public inspection.

AER specifically proposes to operate three existing taps for delivery of gas for resale to consumers other than the right-of-way grantors for whom the taps were originally installed, all for the delivery of gas to Arkansas Louisiana Gas Company for resale to domestic and commercial consumers in Arkansas. AER further states that no new facilities will be constructed for two of the taps; an above-ground regulator and meter will be installed to reactivate one tap at a cost of $250 and, that the gas will be delivered from its general system supply, which it states is adequate to provide the service.

Comment date: October 8, 1993, in accordance with Standard Paragraph G at the end of this notice.

2. Columbia Gas Transmission Corporation

[Docket No. CP93–675–000]

Take notice that on August 18, 1993, Columbia Gas Transmission Corporation (Columbia), 1700 MacCorkle Avenue, S.E., Charleston, West Virginia 25314–1599, filed in Docket No. CP93–675–000 a request pursuant to §§ 157.205(b) and 157.212 of the Commission's Regulations under the Natural Gas Act (18 CFR 157.205(b) and 157.212) and Columbia's authorization in Docket No. CP83–76–000, 22 FERC ¶ 62,029 (1983), to establish a new point of delivery to an existing wholesale customer, all as more set forth in the request on file with the Commission and open to public inspection.

Columbia requests authorization to establish a new point of delivery for sales and transportation service under section 7 of the Natural Gas Act, at an

existing interconnection originally installed pursuant to section 311(a) of the Natural Gas Policy Act, as follows:

Wholesale customer	Residential commercial and industrial	Estimated peak day quantity (Dth)	Estimated annual quantity (Dth)
Mountaineer Gas Company (MGC)	1	2,000	715,400

The quantities to be provided through the new delivery point are within Columbia's currently authorized level of service and will be within existing peak day and annual entitlement nominations of MGC. The sales and transportation to be delivered through the proposed point will be under Columbia's currently effective service agreement with MGC under Rate Schedules CDS, FTS, WS and FSS.

Comment date: October 8, 1993, in accordance with Standard Paragraph G at the end of this notice.

G. Any person or the Commission's staff may, within 45 days after the issuance of the instant notice by the Commission, file pursuant to Rule 214 of the Commission's Procedural Rules (18 CFR 385.214) a motion to intervene or notice of intervention and pursuant to § 157.205 of the Regulations under the Natural Gas Act (18 CFR 157.205) a protest to the request. If no protest is filed within the time allowed therefore, the proposed activity shall be deemed to be authorized effective the day after the time allowed for filing a protest. If a protest is filed and not withdrawn within 30 days after the time allowed for filing a protest, the instant request shall be treated as an application for authorization pursuant to section 7 of the Natural Gas Act.

Lois D. Cashell,

Secretary.

[FR Doc. 93-21198 Filed 8-31-93; 8:45 am]

BILLING CODE 6717-01-M

[Docket No. CP93-676-000]

ANR Pipeline Co.; Application

August 26, 1993.

Take notice that on August 19, 1993, ANR Pipeline Company (ANR), 500 Renaissance Center, Detroit, MI 48243, filed in Docket No. CP93-676-000 an application pursuant to section 7(b) of the Commission's Regulations under the Natural Gas Act for permission and approval to abandon an exchange service provided to Trunkline Gas Company (Trunkline), all as more fully set forth in the appliciaton which is on file with the Commission and open to public inspection.

ANR states that American Louisiana Pipe Line Company (merged into Michigan Wisconsin Pipe Line Company, now ANR) was granted authority in Docket No. CP65-382 (33 FPC 1298 (1965)) to exchange up to 100,000 Mcf of natural gas per day in the event of an emergency, at interconnections between ANR and Trunkline in Elkhart County, Indiana and Tate County, Mississippi, pursuant to an exchange agreement between ANR and Trunkline, dated May 19, 1965 (Agreement) which is designated as Rate Schedule X-5 of ANR's FERC Gas Tariff, Original Volume No. 2.

ANR states that by letter dated July 22, 1993, Trunkline has informed ANR of its desire to terminate the Agreement. ANR states that on August 9, 1993, Trunkline filed in Docket No. CP93-629-000 for authorization to abandon its corresponding Rate Schedule X-5. Accordingly, ANR also requests to abandon the emergency exchange service. ANR states that no facilities are requested to be abandoned herein and that it intends to utilize the facilities to perform transportation pursuant to the provisions of part 284 of the Commission's Regulations.

Any person desiring to be heard or to make any protest with reference to said application should on or before September 16, 1993, file with the Federal Energy Regulatory Commission, Washington, DC 20426, a motion to intervene or a protest in accordance with the requirements of the Commission's Rules of Practice and Procedure (18 CFR 385.214 or 385.211) and the Regulations under the Natural Gas Act (18 CFR 157.10). All protests filed with the Commission will be considered by it in determining the appropriate action to be taken but will not serve to make the protestants parties to the proceeding. Any person wishing to become a party to a proceeding or to participate as a party in any hearing therein must file a motion to intervene in accordance with the Commission's Rules.

Take further notice that, pursuant to the authority contained in and subject to the jurisdiction conferred upon the Federal Energy Regulatory Commission by sections 7 and 15 of the Natural Gas Act and the Commission's Rules of Practice and Procedure, a hearing will be held without further notice before the Commission or its designee on this application if no motion to intervene is filed within the time required herein, if the Commission on its own review of the matter finds that permission and approval for the proposed abandonment is required by the public convenience and necessity. If a motion for leave to intervene is timely filed, or if the Commission on its own motion believes that a formal hearing is required, further notice of such hearing will be duly given.

Under the procedure herein provided for, unless otherwise advised, it will be unnecessary for ANR to appear or be represented at the hearing.

Lois D. Cashell,

Secretary.

[FR Doc. 93-21193 Filed 8-31-93; 8:45 am]

BILLING CODE 6717-01-M

[Docket No. RP93-171-000]

Cities of Chanute, et al. v. Williams Natural Gas Co.; Complaint

August 26, 1993.

Take notice that on August 20, 1993, Cities of Chanute, Auburn, Garnett, Humboldt, Iola, Neodesha, Osage City, Hamilton, Lebo, Mclouth, Sharon, Argonia, Howard, Kansas, The City of Cleveland, Oklahoma, and The Kansas Municipal Gas Agency (Cities) submits an emergency complaint against Williams Natural Gas Company (WNG). The Cities request that the Commission issue an immediate emergency order barring WNG from entering binding long-term contracts for no-notice firm transportation service under Rate Schedules TSS and STS which preclude WNG from entering similar contracts with the small municipal distribution systems located in Kansas and Oklahoma.

Cities states that immediate action is required to prevent irreparable damage to the Cities, who, otherwise, will be deprived of any access to the firm transportation service offered in those schedules for a period of up to 20 years.

Cities submit that the conduct of WNG is (1) contrary to the express terms of its gas tariff filed August 9, 1993, as ordered by the Commission on August 2, 1993 in Docket No. RS92-12-000, and constitutes undue discrimination in violation of Section 4 of the Natural Gas Act, 15 U.S.C. 717c; (2) denies the Cities the choice of services contemplated; and (3) forces the Cities to take inferior transportation service for twenty (20) years at transportation rates up to 30% higher than the requested services.

Cities requests that the Commission issue an immediate Emergency Order barring WNG from entering binding long-term contracts for no-notice transportation service under Rate Schedules STS and TSS which preclude the WNG from entering similar contracts with the Cities pending a final order by the Commission on the terms of the compliance filing and this complaint. The Cities also request that the Commission direct WNG to comply with its tariff and the Commission's order of August 2, 1993 by providing the Cities with equal pro rata service under Rate Schedules STS or TSS, with all other applicant Shippers, and to provide such other relief as is appropriate.

Any person desiring to be heard or to protest said complaint should file a motion to intervene or a protest with the Federal Energy Regulatory Commission, 825 North Capitol Street, NE., Washington, DC 20426, in accordance with Rules 214 and 211 of the Commission's Rules of Practice and Procedure 18 CFR 385.214, 385.211. All such motions or protests should be filed on or before September 3, 1993. Protests will be considered by the Commission in determining the appropriate action to be taken, but will not serve to make protestants parties to the proceeding. Any person wishing to become a party must file a motion to intervene. Copies of this filing are on file with the Commission and are available for public inspection. Answers to this complaint shall be due on or before September 3, 1993.

Lois D. Cashell,

Secretary.

[FR Doc. 93-21196 Filed 8-31-93; 8:45 am]

BILLING CODE 6717-01-M

[Docket No. GT93-50-000]

Tennessee Gas Pipeline Co.; Report of Refunds

August 26, 1993.

Take notice that on June 30, 1993, Tennessee Gas Pipeline Company (Tennessee) tendered for filing with the Federal Energy Regulatory Commission (Commission) its Refund Report made in accordance with the Commission's order issued February 29, 1988 and April 27, 1988, in Docket No. IN86-6. The refunds reflect the final flow-through of the refunds received from Ozark Gas Transmission System (Ozark) through a $0.005/Mcf credit to invoices during the period May 1992 through June 1992, pursuant to a Stipulation and Consent agreement approved by the Commission on August 3, 1987 in Docket No. IN86-6.

Tennessee states that on June 30, 1993, Tennessee refunded $18,911.43, including interest, to its jurisdictional sales customers on the basis of their respective actual volumes of gas purchased during the period March 1, 1982 through August 3, 1987.

Tennessee states that copies of the filing have been mailed to all its jurisdictional sales customers and affected state regulatory commisions.

Any person desiring to be heard or protest said filing should file a motion to intervene or protest with the Federal Energy Regulatory Commission, 825 North Capitol Street, NE., Washington, DC 20426, in accordance with rules 211 and 214 of the Commission's rules of Practice and Procedure (18 CFR 385.211 and 385.214. All such motions or protests should be filed on or before September 2, 1993. Protests will be considered by the Commission in determining the appropriate action to be taken, but will not serve to make protestants parties to the proceeding. Any person wishing to become a party must file a motion to intervene. Copies of this filing are on file with the Commission and are available for public inspection.

Lois D. Cashell,

Secretary.

[FR Doc. 93-21194 Filed 8-31-93; 8:45 am]

BILLING CODE 6717-01-M

[Docket No. CP93-677-000]

Transcontinental Gas Pipe Line Corp.; Application

August 24, 1993.

Take notice that on August 19, 1993, Transcontinental Gas Pipe Line Corporation (TGPL), P.O. Box 1396, Houston, Texas 77251, filed in Docket No. CP93-677-000 an application pursuant to section 7(b) of the Natural Gas Act for permission and approval to abandon firm transportation service provided to ANR Pipeline Company (ANR), to be effective September 15, 1993, which was authorized in Docket No. CP79-291-000, all as more fully set forth in the application on file with the Commission and open to public inspection.

TGPL proposes to abandon 7,000 Mcf per day of firm transportation service provided to ANR under TGPL's Rate Schedule X-216. TGPL states that in accordance to the terms of the service agreement, ANR advised TGPL, by letter dated September 15, 1992, that it no longer needs the firm transportation service. TGPL therefore, seeks authorization to abandon Rate Schedule X-216, and requests that the abandonment become effective on September 15, 1993.

Any person desiring to be heard or to make any protest with reference to said application should on or before September 14, 1993, file with the Federal Energy Regulatory Commission, Washington, DC 20426, a motion to intervene or a protest in accordance with the requirements of the Commission's Rules of Practice and Procedure (18 CFR 385.214 or 385.211) and the Regulations under the Natural Gas Act (18 CFR 157.10). All protests filed with the Commission will be considered by it in determining the appropriate action to be taken but will not serve to make the protestants parties to the proceeding. Any person wishing to become a party to a proceeding or to participate as a party in any hearing therein must file a motion to intervene in accordance with the Commission's Rules.

Take further notice that, pursuant to the authority contained in and subject to the jurisdiction conferred upon the Federal Energy Regulatory Commission by sections 7 and 15 of the Natural Gas Act and the Commission's Rules of Practice and Procedure, a hearing will be held without further notice before the Commission or its designee on this application if no motion to intervene is filed within the time required herein, if the Commission on its own review of the matter finds that permission and approval for the proposed abandonment are required by the public convenience and necessity. If a motion for leave to intervene is timely filed, or if the Commission on its own motion believes that a formal hearing is required, further notice of such hearing will be duly given.

Under the procedure herein provided for, unless otherwise advised, it will be unnecessary for TGPL to appear or be represented at the hearing.

Linwood A. Watson, Jr.,

Acting Secretary.

[FR Doc. 93-21200 Filed 8-31-93; 8:45 am]

BILLING CODE 6717-01-M

[Docket No. CP93-626-000]

United Gas Pipe Line Co.; Request Under Blanket Authorization

August 26, 1993.

Take notice that on August 6, 1993, United Gas Pipe Line Company (United)[1], Post Office Box 1478, Houston, Texas 77251-1478, filed in Docket No. CP93-626-000 a request, as supplemented on August 23, 1993, pursuant to §§ 157.205, 157.211, and 157.216 of the Commission's Regulations under the Natural Gas Act (18 CFR 157.205, 157.211 and 157.216) for authorization replace measurement equipment to accommodate increased sales to South Coast Gas Company (South Coast), under the blanket certificate issued in Docket No. CP82-430, pursuant to sections 7(b) and 7(c) of the Natural Gas Act, all as more fully set forth in the request which is on file with the Commission and open to public inspection.

United proposes to replace an existing 60B meter with a 5000 meter and computer which would increase the capacity at its Ashland city gate station located in Terrebonne Parish, Louisiana, and would be used to accommodate South Coast's increased service area. It is indicated that the new meter would provide an increase in capacity for an average volume of less than 10 million Btu per day. United states that the total volumes to be delivered to South Coast after the replacement would not exceed the total volumes authorized prior to the replacement. It is also stated that the volumes delivered to South Coast would remain within South Coast's existing certificated entitlements. United indicates that the old meter was authorized in Docket No. G-1447. United estimates a removal cost of the old facility of $62.00 and a cost of the new meter of $5,288, which would be reimbursed by South Coast.

United states that it has sufficient capacity to render the proposed service without detriment or disadvantage to its other customers; and that its tariff does not prohibit the proposed reassignment of volumes.

Any person or the Commission's staff may, within 45 days after issuance of the instant notice by the Commission, file pursuant to Rule 214 of the Commission's Procedural Rules (18 CFR 385.214) a motion to intervene or notice of intervention and pursuant to § 157.205 of the Regulations under the Natural Gas Act (18 CFR 157.205) a protest to the request. If no protest is filed within the time allowed therefor, the proposed activity shall be deemed to be authorized effective the day after the time allowed for filing a protest. If a protest is filed and not withdrawn within 30 days after the time allowed for filing a protest, the instant request shall be treated as an application for authorization pursuant to section 7 of the Natural Gas Act.

Lois D. Cashell,

Secretary.

[FR Doc. 93-21192 Filed 8-31-93; 8:45 am]

BILLING CODE 6717-01-M

[1] United has advised that as of August 24, 1993, the name of United has been changed to Koch Gateway Pipeline Company.

[Docket No. RS92-26-006]

United Gas Pipe Line Co.; Petition for Waiver

August 26, 1993.

Take notice that on August 24, 1993, United Gas Pipe Line Company (United), P.O. Box 1478, Houston, Texas 77251-1478, filed a Notice of Petition for Waiver of certain part 284 reporting requirements.

Specifically, United requests a waiver of:

18 CFR 284.106 (a), (b), (c), (d) and (g), 18 CFR 284.222 and 18 CFR 284.223 (d), (e) and (f), to the extent necessary to implement non-permanent capacity release transactions on United's system without the necessity of filing initial reports, subsequent reports, annual reports, notifications of termination and storage reports reflecting such capacity release transactions; and,

18 CFR 284.106(a)(3)(iv), to the extent necessary to allow United to add or delete receipt and delivery points without the necessity of filing subsequent reports under 18 CFR 284.106(b).

United requests an effective date of October 1, 1993, for this waiver.

Any person desiring to be heard or to make any protest with reference to said petition should on or before September 2, 1993, file with the Federal Energy Regulatory Commission, Washington, DC 20426, a motion to intervene or a protest in accordance with the requirements of the Commission's Rules of Practice and Procedure (18 CFR 385.214 or 385.211) and the Regulations under the Natural Gas Act (18 CFR 157.10). All protests filed with the Commission will be considered by it in determining the appropriate action to be taken but will not serve to make the protestants parties to the proceeding. Any person wishing to become a party to a proceeding or to participate as a party in any hearing therein must file a motion to intervene in accordance with the Commission's Rules.

Lois D. Cashell,

Secretary.

[FR Doc. 93-21197 Filed 8-31-93; 8:45 am]

BILLING CODE 6717-01-M

[Docket No. RP93-61-000]

U-T Offshore System; Informal Settlement Conference

August 26, 1993.

Take notice that an informal settlement conference will be convened in this proceeding on September 2, 1993 at 2 p.m., at the offices of the Federal Energy Regulatory Commission, 810 First Street, NE., Washington, DC, for the purpose of exploring the possible settlement of the issues in this proceeding.

Any party, as defined by 18 CFR 385.102(c), or any participant as defined by 18 CDR 385.102(b), is invited to attend. Persons wishing to become a party must move to intervene and receive intervenor status pursuant to the Commission's regulations (18 CFR 385.214).

For additional information, please contact Irene E. Szopo at (202) 208-1602, or Anja M. Clark (202) 208-2034.

Lois D. Cashell,

Secretary.

[FR Doc. 93-21195 Filed 8-31-93; 8:45 am]

BILLING CODE 6717-01-M

Advisory Committee on Environmental Restoration and Waste Management

AGENCY: Department of Energy.

ACTION: Notice of open meeting.

SUMMARY: Pursuant to the provisions of the Federal Advisory Committee Act (Pub. L. 92-463, 86 Stat. 770), notice is hereby given of the following Advisory Committee meeting:

NAME: Environmental Restoration and Waste Management Advisory Committee (EMAC).

DATES AND TIMES: Wednesday, September 22, 1993, 8 a.m. to 5:45 p.m; Wednesday, September 22, 1993, 7:30 p.m. to 10:30 p.m.; Thursday, September 23, 1993, 8:30 a.m. to 4:30 p.m.; Thursday, September 23, 1993, 7:30 p.m. to 10:30 p.m.

PLACE: The Shiloh Inn, 780 Lindsay Blvd., Idaho Falls, Idaho 83402.

FOR FURTHER INFORMATION CONTACT: James T. Melillo, Executive Secretary, EMAC, EM-1, 1000 Independence Avenue SW., Washington, DC 20585, (202) 586-4400.

SUPPLEMENTARY INFORMATION: Purpose of the Committee. The purpose of the Committee is to provide the Assistant Secretary, Environmental Restoration and Waste Management (EM) with advice and recommendations on both the substance and the process of the EM Programmatic Environmental Impact Statement (PEIS) and other EM projects from the perspectives of affected groups and State and local Governments. The Committee will help to improve the Environmental Restoration and Waste Management Program by assisting in the process of securing consensus recommendations, and providing the department's numerous publics with opportunities to make their views known on the Environmental Restoration and Waste Management Program.

Tentative Agenda

Wednesday, September 22, 1993

8 a.m.—Chairman Glenn Paulson Opens the Meeting
Remarks by Mr. Thomas P. Grumbly, Assistant Secretary of Energy for Environmental Restoration and Waste Management
Experts' Discussion of Waste Management and Storage Issues from a National Perspective
12:15 p.m.—Lunch
1:45 p.m.—Regional Perspectives on Idaho Waste Management Issues (Panel Discussion)
Committee Business
5:45 p.m.—Meeting Adjourns
7:30 p.m.—Public Comment Session
10:30 p.m.—Meeting Adjourns

Thursday, September 23, 1993

8:30 a.m.—Chairman Paulson Reconvenes Public Meeting
Committee Business
Status of Budget Development
Status of Compliance Agreements
12 p.m.—Lunch
1:30 p.m.—Environmental Restoration Effectiveness—Cost versus Benefits from an Idaho National Engineering Laboratory perspective. (Panel Discussion)
Committee Business
4:30 p.m.—Meeting Adjourns for Dinner
7:30 p.m.—Special Presentation on Risk Assessment Methodologies
Public Question and Answer Period
10:30 p.m.—Meeting Ends

A final agenda will be available at the meeting.

Public Participation

The meeting is open to the public. Written statements may be filed with the Committee either before or after the meeting. Members of the public who wish to make oral statements pertaining to agenda items should contact James T. Melillo at the address or telephone number listed above. Individuals wishing to orally address the committee during the public comment session should call (800) 862–8860 and leave a message. Individuals may also register on September 22, 1993, at the meeting. Every effort will be made to hear all those wishing to speak to the committee, on a first come, first serve basis. Those who call in and reserve time will be given the opportunity to speak first. The Committee Chairperson is empowered to conduct the meeting in a fashion that will facilitate the orderly conduct of business.

Transcripts and Minutes

A transcript and minutes of the meeting will be available for public review and copying at the Freedom of Information Public Reading Room, 1E–190, Forrestal Building, 1000 Independence Avenue, SW., Washington, DC 20585 between 9 a.m. and 4 p.m., Monday through Friday, except Federal holidays.

Issued at Washington, DC on August 26, 1993.

Howard H. Raiken,

Advisory Committee Management Officer.

[FR Doc. 93–21282 Filed 8–31–93; 8:45 am]

BILLING CODE 6450–01–M

Hydrogen Technical Advisory Panel

AGENCY: Department of Energy.

ACTION: Notice of open meeting.

SUMMARY: Pursuant to the provisions of the Federal Advisory Committee Act (Pub. L. 92–463, 86 stat. 770, as amended), notice is hereby given of the following advisory committee meeting:

NAME: Hydrogen Technical Advisory Panel.

Date and Time: Tuesday, September 28, 1993, 12:30 p.m.–5:30 p.m.; Wednesday, September, 29, 1993, 9 a.m.–3:30 p.m.

Place: Sheraton Premiere at Tysons Corner, 8661 Leesburg Pike, Vienna, VA 22182, Telephone: (703) 448–1234.

FOR FURTHER INFORMATION CONTACT: Dr. Russell Eaton, Designated Federal Official, 1000 Independence Avenue, SW., Washington, DC 20585, (202) 586–1506.

SUPPLEMENTARY INFORMATION: Purpose of the Committee: The Hydrogen Technical Advisory Panel (HTAP) will advise the Secretary of Energy, who has the overall management responsibility for carrying out the programs under the Matsunaga Hydrogen Research, Development, and Demonstration Program Act of 1990, Public Law 101–566. The Panel will review and make any necessary recommendations to the Secretary on the following items: (1) The implementation and conduct of programs required by the Act, (2) the economic, technological, and environmental consequences of the deployment of hydrogen production and use systems, and (3) the contents of the comprehensive 5-year program required by the Act.

Tentative Agenda

Tuesday, September 28, 1993

12:30 p.m.—Introductions, All
12:45 p.m.—Opening Remarks, J. Birk
1 p.m.—DOE Report, R. Eaton
1:30 p.m.—DOE Implementation Plan, N. Rossmeissl
2 p.m.—Discussion of Plan, All
3 p.m.—Break
3:15 p.m.—Closure on Vision Statement, Panel Vote
3:30 p.m.—Aircraft Development Program, A. Bain
4 p.m.—Discussion of Proposed Program, All
4:45 p.m.—Public Comments (5-minute rule), Public
5:35 p.m.—Adjournment
5:45 p.m.—Reception, Panel/Guests

Wednesday, September 29, 1993

9 a.m.—Recent Pathway Studies, J. Badin
9:30 a.m.—Discussion of Pathway Studies, All
10 a.m.—DOD Programs, TBD
10:30 a.m.—Discussion DOD Program, All
11 a.m.—Break
11:30 a.m.—Transportation Development Program, F. Lynch
12 noon—Discussion of Transportation Program, All
12:45 p.m.—Lunch
1:45 p.m.—Basic Research and Analytical Studies Program, H. Linden
2:15 p.m.—Discussion of Above, All
3 p.m.—Round Table, All
3:25 p.m.—Action Items/Next Meeting, J. Birk
3:30 p.m.—Adjournment

Public Participation

The meeting is open to the public. The Chairman of the HTAP is empowered to conduct the meeting in a fashion that will, in the Chairman's judgment, facilitate the orderly conduct of business.

Any member of the public who wishes to make an oral presentation (five minutes or less) pertaining to agenda items should contact the

Designated Federal Official at the address or telephone number listed above. Requests must be received before 5 p.m. (E.D.T.) Wednesday, September 22, 1993, and reasonable provision will be made to include the presentation during the public comment period. It is requested that oral presenters provide 15 copies of their statements at the time of their presentations.

Written testimony pertaining to agenda items may be submitted prior to the meeting. Written testimony must be received by the Designated Federal Official at the address shown above before 5 p.m. (E.D.T.) Wednesday, September 22, 1993, to assure that it is considered by Panel members during the meeting.

Minutes

A transcript of this meeting will be available for public review and copying approximately 30 days following the meeting at the Public Reading Room 1E-190, Forrestal Building, 1000 Independence Avenue SW., Washington, DC, between 9 a.m. and 4 p.m., Monday through Friday except Federal holidays.

Issued at Washington, DC, on August 26, 1993.

Marcia L. Morris,

Deputy Advisory Committee Management Officer.

[FR Doc. 93-21283 Filed 8-31-93; 8:45 am]

BILLING CODE 6450-01-M

Office of Hearings and Appeals

Cases Filed During the Week of July 16 through July 23, 1993

During the week of July 16 through July 23, 1993, the appeals and applications for exception or other relief listed in the Appendix to this Notice were filed with the Office of Hearings and Appeals of the Department of Energy.

Under DOE procedural regulations, 10 CFR part 205, any person who will be aggrieved by the DOE action sought in these cases may file written comments on the application within ten days of service of notice, as prescribed in the procedural regulations. For purposes of the regulations, the date of service of notice is deemed to be the date of publication of this Notice or the date of receipt by an aggrieved person of actual notice, whichever occurs first. All such comments shall be filed with the Office of Hearings and Appeals, Department of Energy, Washington, DC 20585.

Dated: August 26, 1993.

George B. Breznay,

Director, Office of Hearings and Appeals.

LIST OF CASES RECEIVED BY THE OFFICE OF HEARINGS AND APPEALS

[Week of July 16 through July 23, 1993]

Date	Name and location of applicant	Case No.	Type of submission
Jul. 20,1993	Gil-Mc Oil Corporation et al. (See Attached List) Washington, DC.	LEF-0054 thru LEF-0112	Implementation of special refund procedures. If Granted: The Office of Hearings and Appeals would implement Special Refund Procedures pursuant to 10 CFR Part 205, Subpart V.
Jul. 20, 1993 ...	L. K. Seymour, Idaho Falls, ID	LFA-0310	Appeal of an information request denial. If Granted: L. K. Seymour would receive access to personnel records relating to engineering management positions in the New Production Reactors Office.

LEF-0054 Gil-MC Oil Corp.
LEF-0055 Leclair Operating Co.
LEF-0056 SRG Corporation
LEF-0057 Intercoastal Oil Co.
LEF-0058 Crude Oil Purchasing, Inc.
LEF-0059 Jaguar Petroleum, Inc.
LEF-0060 N.C. Ginther Company
LEF-0061 Bell Fuels, Inc.
LEF-0062 Este Oil Company
LEF-0063 G & G Oil Company
LEF-0064 General Petroleum
LEF-0065 Reco Petroleum, Inc.
LEF-0066 SOS Monarch Oil Corp.
LEF-0067 Capitol 66 Oil Company
LEF-0068 Cumberland Farms Dairy, Inc.
LEF-0069 Kickapoo Oil
LEF-0070 Lampton-Love, Inc.
LEF-0071 Skinney's Inc.
LEF-0072 Vermont Morgan Corporation
LEF-0073 Gulf States Oil and Refining
LEF-0074 Beacon Bay Enterprises, Inc.
LEF-0075 Bob's Broadway
LEF-0076 Clearview Gulf
LEF-0077 E-Z Service, Inc.
LEF-0078 Ed's Exxon
LEF-0079 Milbrae Shell
LEF-0080 Bob Hutchinson, Inc.
LEF-0081 Buchanan Shell, Inc.
LEF-0082 Jim Campbell Shell
LEF-0083 Miles Union Service
LEF-0084 Ron's Shell
LEF-0085 Elwood Chevron Service
LEF-0086 A-1 Exxon
LEF-0087 Half Moon Bay Exxon
LEF-0088 Redhill Mobil and Towing
LEF-0089 Pete Alijian Chevron
LEF-0090 Shaw & 99 Chevron
LEF-0091 Sunset Blvd. Car Wash
LEF-0092 Aptos Shell
LEF-0093 Alameda Chevron
LEF-0094 Ben's Exxon Service
LEF-0095 Berryessa Chevron
LEF-0096 Bill Wren's Shell
LEF-0097 Cutting Shell Service
LEF-0098 Ed Gularte Chevron
LEF-0099 Joe Berube Services
LEF-0100 McDowell Exxon
LEF-0101 Petaluma Standard Service
LEF-0102 Regalia's Chevron Service
LEF-0103 Starr Union Service
LEF-0104 Tenth Street Chevron
LEF-0105 Tom's Coffee Tree Chevron
LEF-0106 Wallace Arco Service
LEF-0107 Walt's Shell Service
LEF-0108 Weber's Chevron Service
LEF-0109 C. J. King Chevron
LEF-0110 Hughes Burlingame Shell
LEF-0111 Sandusky's Union Service
LEF-0112 Skycrest Shell

REFUND APPLICATIONS RECEIVED

Date received	Name of refund proceeding/Name of refund applicant	Case No.
7/16/93 thru 7/23/93	Atlantic Richfield applications received	RF304-14235 thru RF304-14252
7/16/93 thru 7/23/93	Texaco oil refund applications received	RF321-19801 thru RF321-19812

REFUND APPLICATIONS RECEIVED

Date received	Name of refund proceeding/Name of refund applicant	Case No.
7/19/93	Waterloo Service Company	RF340–188
7/19/93	Eagle Rock Bus Co	RF272–94790
7/19/93	Hansen Bros. Enterprises, Inc	RF272–94791
7/19/93	Van Mol Farms	RF346–56
7/20/93	Olton Grain Coop	RF272–94792
7/20/93	Farmers Coop Assoc	RF272–94793
7/22/93	Ottawa Lake Co-op Elevator	RF272–94794

[FR Doc. 93–21286 Filed 8–31–93; 8:45 am]

BILLING CODE 6450–01–P

Issuance of Proposed Decision and Order During the Week of July 26 Through July 30, 1993

During the week of July 26 through July 30, 1993, the proposed decision and order summarized below was issued by the Office of Hearings and Appeals of the Department of Energy with regard to an application for exception.

Under the procedural regulations that apply to exception proceedings (10 CFR part 205, subpart D), any person who will be aggrieved by the issuance of a proposed decision and order in final form may file a written notice of objection within ten days of service. For purposes of the procedural regulations, the date of service of notice is deemed to be the date of publication of this Notice or the date an aggrieved person receives actual notice, whichever occurs first.

The procedural regulations provide that an aggrieved party who fails to file a Notice of Objection within the time period specified in the regulations will be deemed to consent to the issuance of the proposed decision and order in final form. An aggrieved party who wishes to contest a determination made in a proposed decision and order must also file a detailed statement of objections within 30 days of the date of service of the proposed decision and order. In the statement of objections, the aggrieved party must specify each issue of fact or law that it intends to contest in any further proceeding involving the exception matter.

Copies of the full text of this proposed decision and order are available in the Public Reference Room of the Office of Hearings and Appeals, Room 1E–234, Forrestal Building, 1000 Independence Avenue, S.W., Washington, D.C. 20585, Monday through Friday, between the hours of 1 p.m. and 5 p.m., except federal holidays.

Dated: August 26, 1993.

George B. Breznay,

Director, Office of Hearings and Appeals.

Texport Oil Company, Houston, Texas, LEE–0047, Reporting Requirements

Texport Oil Company (Texport) filed an Application for Exception from the provision of filing Form EIA–782B, the "Reseller's/Retailers' Monthly Petroleum Product Sales Report." The exception request, if granted, would permit Texport to be exempted from filing Form EIA–782B. On July 27, 1993, the Department of Energy issued a Proposed Decision and Order which determined that the exception request be denied.

[FR Doc. 93–21291 Filed 8–31–93; 8:45 am]

BILLING CODE 6450–01–P

Office of Energy Efficiency and Renewable Energy

[Case No. F–059]

Energy Conservation Program for Consumer Products: Granting of the Application for Interim Waiver and Publishing of the Petition for Waiver of DOE Furnace Test Procedures From The Ducane Company Inc.

AGENCY: Office of Energy Efficiency and Renewable Energy, Department of Energy.

SUMMARY: Today's notice publishes a letter granting an Interim Waiver to The Ducane Company Inc. (Ducane) from the existing Department of Energy (DOE) test procedure regarding blower time delay for the company's DHC, ULB, and UH series of oil furnaces.

Today's notice also publishes a "Petition for Waiver" from Ducane. Ducane's Petition for Waiver requests DOE to grant relief from the DOE furnace test procedure relating to the blower time delay specification. Ducane seeks to test using a blower delay time of 30 seconds for its UHC, ULB, and UH series of oil furnaces instead of the specified 1.5-minute delay between burner on-time and blower on-time. DOE is soliciting comments, data, and information respecting the Petition for Waiver.

DATES: DOE will accept comments, data, and information not later than October 1, 1993.

ADDRESSES: Written comments and statements shall be sent to: Department of Energy, Office of Energy Efficiency and Renewable Energy, Case No. F–059, Mail Stop CE–90, room 6B–025, Forrestal Building, 1000 Independence Avenue, SW., Washington, DC 20585, (202) 586–3012.

FOR FURTHER INFORMATION CONTACT:

Cyrus H. Nasseri, U.S. Department of Energy, Office of Energy Efficiency and Renewable Energy, Mail Station EE–431, Forrestal Building, 1000 Independence Avenue, SW., Washington, DC 20585, (202) 586–9127.

Eugene Margolis, Esq., U.S. Department of Energy, Office of General Counsel, Mail Station GC–41, Forrestal Building, 1000 Independence Avenue, SW., Washington, DC 20585, (202) 586–9507.

SUPPLEMENTARY INFORMATION: The Energy Conservation Program for Consumer Products (other than automobiles) was established pursuant to the Energy Policy and Conservation Act (EPCA), Public Law 94–163, 89 Stat. 917, as amended by the National Energy Conservation Policy Act (NECPA), Public Law 95–619, 92 Stat. 3266, the National Appliance Energy Conservation Act of 1987 (NAECA), Public Law 100–12, the National Appliance Energy Conservation Amendments of 1988 (NAECA 1988), Public Law 100–357, and the Energy Policy Act of 1992 (EPAct), Public Law 102–486, 106 Stat. 2776, which requires DOE to prescribe standardized test procedures to measure the energy consumption of certain consumer products, including furnaces. The intent of the test procedures is to provide a comparable measure of energy consumption that will assist consumers in making purchasing decisions. These test procedures appear at 10 CFR part 430, subpart B.

DOE amended the prescribed test procedures by adding 10 CFR 430.27 on September 26, 1980, creating the waiver process. 45 FR 64108. Thereafter, DOE further amended the appliance test procedure waiver process to allow the Assistant Secretary for Energy Efficiency and Renewable Energy (Assistant Secretary) to grant an Interim Waiver from test procedure requirements to manufacturers that have petitioned DOE for a waiver of such prescribed test procedures. 51 FR 42823, November 26, 1986.

The waiver process allows the Assistant Secretary to waive temporarily test procedures for a particular basic model when a petitioner shows that the basic model contains one or more design characteristics which prevent testing according to the prescribed test procedures or when the prescribed test procedures may evaluate the basic model in a manner so unrepresentative of its true energy consumption as to provide materially inaccurate comparative data. Waivers generally remain in effect until final test procedure amendments become effective, resolving the problem that is the subject of the waiver.

The Interim Waiver provisions added by the 1986 amendment allow the Secretary to grant an Interim Waiver when it is determined that the applicant will experience economic hardship if the Application for Interim Waiver is denied, if it appears likely that the Petition for Waiver will be granted, and/or the Assistant Secretary determines that it would be desirable for public policy reasons to grant immediate relief pending a determination on the Petition for Waiver. An Interim Waiver remains in effect for a period of 180 days or until DOE issues its determination on the Petition for Waiver, whichever is sooner, and may be extended for an additional 180 days, if necessary.

On July 8, 1993, Ducane filed an Application for Interim Waiver regarding blower time delay. Ducane's Application seeks an Interim Waiver from the DOE test provisions that require a 1.5-minute time delay between the ignition of the burner and starting of the circulating air blower. Instead, Ducane requests the allowance to test using a 30-second blower time delay when testing its UHC, ULB, and UH series of oil furnaces. Ducane states that the 30-second delay is indicative of how these furnaces actually operate. Such a delay results in an energy savings of approximately 0.7 to 0.9 percent (depending on model). Since current DOE test procedures do not address this variable blower time delay, Ducane asks that the Interim Waiver be granted.

Previous waivers for this type of time blower delay control have been granted by DOE to Coleman Company, 50 FR 2710, January 18, 1985; Magic Chef Company, 50 FR 41553, October 11, 1985; Rheem Manufacturing Company, 53 FR 48574, December 1, 1988, 56 FR 2920, January 25, 1991, 57 FR 10166, March 24, 1992, and 57 FR 34560, August 5, 1992; Trane Company, 54 FR 19226, May 4, 1989, 56 FR 6021, February 14, 1991, 57 FR 10167, March 24, 1992, and 57 FR 22222, May 27, 1992; Lennox Industries, 55 FR 50224, December 5, 1990, and 57 FR 49700, November 3, 1992; Inter-City Products Corporation, 55 FR 51487, December 14, 1990, and 56 FR 63945, December 6, 1991; DMO Industries, 56 FR 4622, February 5, 1991; Heil-Quaker Corporation, 56 FR 6019, February 14, 1991; Carrier Corporation, 56 FR 6018, February 14, 1991, and 57 FR 38830, August 27, 1992; Amana Refrigeration Inc., 56 FR 27958, June 18, 1991, 56 FR 63940, December 6, 1991, and 57 FR 23392, June 3, 1992; Snyder General Corporation, 56 FR 54960, September 9, 1991; Goodman Manufacturing Corporation, 56 FR 51713, October 15, 1991, and 57 FR 27970, June 23, 1992; Ducane Company, 56 FR 63943, December 6, 1991, and 57 FR 10163, March 24, 1992; Armstrong Air Conditioning, Inc., 57 FR 899, January 9, 1992, 57 FR 10160, March 24, 1992, 57 FR 10161, March 24, 1992, 57 FR 39193, August 28, 1992, and 57 FR 54230, November 17, 1992; Thermo Products, Inc., 57 FR 903, January 9, 1992; Consolidated Industries Corporation, 57 FR 22220, May 27, 1992; Evcon Industries, Inc., 57 FR 47847, October 20, 1992; and Bard Manufacturing Company, 57 FR 53733, November 12, 1992. Thus, it appears likely that the Petition for Waiver will be granted for blower time delay.

In those instances where the likely success of the Petition for Waiver has been demonstrated based upon DOE having granted a waiver for a similar product design, it is in the public interest to have similar products tested and rated for energy consumption on a comparable basis.

Therefore, based on the above, DOE is granting Ducane an Interim Waiver for its UHC, ULB, and UH series of oil furnaces. Pursuant to paragraph (e) of § 430.27 of the Code of Federal Regulations part 430, the following letter granting the Application for Interim Waiver to Ducane was issued.

Pursuant to paragraph (b) of 10 CFR 430.27, DOE is hereby publishing the "Petition for Waiver" in its entirety. The petition contains no confidential information. DOE solicits comments, data, and information respecting the petition.

Issued in Washington, DC, August 25, 1993.

Robert L. San Martin,

Acting Assistant Secretary, Energy Efficiency and Renewable Energy.

August 25, 1993.

Mr. Charles W. Adams,

Vice President, Research and Development, Ducane Heating Division, The Ducane Company, Inc., Blackville, South Carolina 29817–1199.

Dear Mr. Adams: This is in response to your July 8, 1993, Application for Interim Waiver and Petition for Waiver from the Department of Energy (DOE) test procedure regarding blower time delay for The Ducane Company Inc. (Ducane) UHC, ULB, and UH series of oil furnaces.

Previous waivers for this type of timed blower delay control have been granted by DOE to Coleman Company, 50 FR 2710, January 18, 1985; Magic Chef Company, 50 FR 41553, October 11, 1985; Rheem Manufacturing Company, 53 FR 48574, December 1, 1988, 56 FR 2920, January 25, 1991, 57 FR 10166, March 24, 1992, and 57 FR 34560, August 5, 1992; Trane Company, 54 FR 19226, May 4, 1989, 56 FR 6021, February 14, 1991, 57 FR 10167, March 24, 1992, and 57 FR 22222, May 27, 1992; Lennox Industries, 55 FR 50224, December 5, 1990, and 57 FR 49700, November 3, 1992; Inter-City Products Corporation, 55 FR 51487, December 14, 1990, and 56 FR 63945, December 6, 1991; DMO Industries, 56 FR 4622, February 5, 1991; Heil-Quaker Corporation, 56 FR 6019, February 14, 1991; Carrier Corporation, 56 FR 6018, February 14, 1991, and 57 FR 38830, August 27, 1992; Amana Refrigeration Inc., 56 FR 27958, June 18, 1991, 56 FR 63940, December 6, 1991, and 57 FR 23392, June 3, 1992; Snyder General Corporation, 56 FR 54960, September 9, 1991; Goodman Manufacturing Corporation, 56 FR 51713, October 15, 1991, and 57 FR 27970, June 23, 1992; Ducane Company, 56 FR 63943, December 6, 1991, and 57 FR 10163, March 24, 1992; Armstrong Air Conditioning, Inc., 57 FR 899, January 9, 1992, 57 FR 10160, March 24, 1992, 57 FR 10161, March 24, 1992, 57 FR 39193, August 28, 1992, and 57 FR 54230, November 17, 1992; Thermo Products, Inc., 57 FR 903, January 9, 1992; Consolidated Industries Corporation, 57 FR 22220, May 27, 1992; Evcon Industries, Inc., 57 FR 47847, October 20, 1992; and Bard Manufacturing Company, 57 FR 53733, November 12, 1992. Thus, it appears likely that the Petition for Waiver will be granted for blower time delay.

Ducane's Application for Interim Waiver does not provide sufficient information to evaluate what, if any, economic impact or competitive disadvantage Ducane will likely experience absent a favorable determination on its application. However, in those instances where the likely success of the Petition for Waiver has been demonstrated, based upon DOE having granted a waiver for a similar product design, it is in the public interest to have similar products tested and rated for energy consumption on a comparable basis.

Therefore, Ducane's Application for an Interim Waiver from the DOE test procedure for its UHC, ULB, and UH series of oil furnaces regarding blower time delay is granted.

Ducane shall be permitted to test its UHC, ULB, and UH series of oil furnaces on the basis of the test procedures specified in 10 CFR part 430, subpart B, appendix N, with the modification set forth below:

(i) Section 3.0 in appendix N is deleted and replaced with the following paragraph:

3.0 Test Procedure. Testing and measurements shall be as specified in Section 9 in ANSI/ASHRAE 103–82 with the exception of Sections 9.2.2, 9.3.1, and 9.3.2, and the inclusion of the following additional procedures:

(ii) Add a new paragraph 3.10 in appendix N as follows:

3.10 Gas- and Oil-Fueled Central Furnaces. After equilibrium conditions are achieved following the cool-down test and the required measurements performed, turn on the furnace and measure the flue gas temperature, using the thermocouple grid described above, at 0.5 and 2.5 minutes after the main burner(s) comes on. After the burner start-up, delay the blower start-up by 1.5 minutes (t−) unless: (1) the furnace employs a single motor to drive the power burner and the indoor air circulation blower, in which case the burner and blower shall be started together; or (2) the furnace is designed to operate using an unvarying delay time that is other than 1.5 minutes, in which case the fan control shall be permitted to start the blower; or (3) the delay time results in the activation of a temperature safety device which shuts off the burner, in which case the fan control shall be permitted to start the blower. In the latter case, if the fan control is adjustable, set it to start the blower at the highest temperature. If the fan control is permitted to start the blower, measure time delay (t−) using a stop watch. Record the measured temperatures. During the heat-up test for oil-fueled furnaces, maintain the draft in the flue pipe within ± 0.01 inch of water column of the manufacturer's recommended on-period draft.

This Interim Waiver is based upon the presumed validity of statements and all allegations submitted by the company. This Interim Waiver may be removed or modified at any time upon a determination that the factual basis underlying the application is incorrect.

The Interim Waiver shall remain in effect for a period of 180 days or until DOE acts on the Petition for Waiver, whichever is sooner, and may be extended for an additional 180-day period, if necessary.

Sincerely,

Robert L. San Martin,

Acting Assistant Secretary, Energy Efficiency and Renewable Energy.

July 8, 1993

Assistant Secretary,

Conservation and Renewable Energy, United States Department of Energy, 1000 Independence Avenue Washington, DC 20858.

Gentlemen: Please consider this Petition for Waiver and Application for Interim Waiver pursuant to title 10 CFR 430.27.

Waiver is requested from the test procedures covering oil furnaces found at appendix N to subpart B of 10 CFR part 430. The current Heat-Up Test procedures requires at 1.5 minute time delay between burner and blower startup. The Ducane Company is requesting to use 30 seconds instead of 1.5 minutes for Series "UHC, ULB, and UH" Oil Furnaces.

These models will employ an electronic blower time control that starts the blower in approximately 30 seconds. Our testing indicates an increase of approximately .7 to .9% (depending on model) in AFUE using the 30 second time delay.

The Ducane Company seeks an interim waiver because it is likely that our waiver will be granted. Similar waivers have been granted to other manufacturers in the past.

A copy of this Petition for Waiver and Application for Interim Waiver will be sent to other manufacturers of similar type products.

Respectfully Yours,

The Ducane Company, Inc.

Charles W. Adams,

V.P. Research and Development, Ducane Heating Division.

[FR Doc. 93– 21284 Filed 8–31–93; 8:45 am]

BILLING CODE 6450–01–P

[Case No. F–058]

Energy Conservation Program for Consumer Products: Granting of the Application for Interim Waiver and Publishing of the Petition for Waiver of DOE Furnace Test Procedures From Lennox Industries Inc.

AGENCY: Office of Energy Efficiency and Renewable Energy, Department of Energy.

SUMMARY: Today's notice publishes a letter granting an Interim Waiver to Lennox Industries Inc. (Lennox) from the existing Department of Energy (DOE) test procedure regarding blower time delay for the company's G23 and G26 series of furnaces.

Today's notice also publishes a "Petition for Waiver" from Lennox. Lennox's Petition for Waiver requests DOE to grant relief from the DOE furnace test procedure relating to the blower time delay specification. Lennox seeks to test using a blower delay time of 45 seconds for its G23 and G26 series of furnaces instead of the specified 1.5-minute delay between burner on-time and blower on-time. DOE is soliciting comments, data, and information respecting the Petition for Waiver.

DATES: DOE will accept comments, data, and information not later than October 1, 1993.

ADDRESSES: Written comments and statements shall be sent to: Department of Energy, Office of Energy Efficiency and Renewable Energy, Case No. F–058, Mail Stop EE–90, Room 6B–025, Forrestal Building, 1000 Independence Avenue, SW., Washington, DC 20585, (202) 586–3012.

FOR FURTHER INFORMATION CONTACT:

Cyrus H. Nasseri, U.S. Department of Energy, Energy Efficiency and Renewable Energy, Mail Station EE–431, Forrestal Building, 1000 Independence Avenue, SW., Washington, DC 20585, (202) 586–9127.

Eugene Margolis, Esq., U.S. Department of Energy, Office of General Counsel, Mail Station GC–41, Forrestal Building, 1000 Independence Avenue, SW., Washington, DC 20585, (202) 586–9507.

SUPPLEMENTARY INFORMATION: The Energy Conservation Program for Consumer Products (other than automobiles) was established pursuant to the Energy Policy and Conservation Act (EPCA), Public Law 94–163, 89 Stat. 917, as amended by the National Energy Conservation Policy Act (NECPA), Public Law 95–619, 92 Stat. 3266, the National Appliance Energy Conservation Act of 1987 (NAECA), Public Law 100–12, the National Appliance Energy Conservation Amendments of 1988 (NAECA 1988), Public Law 100–357, and the Energy Policy Act of 1992 (EPAct) Public Law 102–486, 106 Stat. 2776, which requires DOE to prescribe standardized test procedures to measure the energy consumption of certain consumer products, including furnaces. The intent of the test procedures is to provide a comparable measure of energy consumption that will assist consumers in making purchasing decisions. These test procedures appear at 10 CFR part 430, subpart B.

DOE amended the prescribed test procedures by adding 10 CFR 430.27 on September 26, 1980, creating the waiver process. 45 FR 64108. Thereafter, DOE further amended the appliance test procedure waiver process to allow the Assistant Secretary for Energy Efficiency and Renewable Energy (Assistant Secretary) to grant an Interim Waiver from test procedure requirements to manufacturers that have petitioned DOE for a waiver of such prescribed test procedures. 51 FR 42823, November 26, 1986.

The waiver process allows the Assistant Secretary to waive temporarily test procedures for a particular basic model when a petitioner shows that the basic model contains one or more design characteristics which prevent testing according to the prescribed test procedures or when the prescribed test procedures may evaluate the basic

model in a manner so unrepresentative of its true energy consumption as to provide materially inaccurate comparative data. Waivers generally remain in effect until final test procedure amendments become effective, resolving the problem that is the subject of the waiver.

The Interim Waiver provisions added by the 1986 amendment allow the Secretary to grant an Interim Waiver when it is determined that the applicant will experience economic hardship if the Application for Interim Waiver is denied, if it appears likely that the Petition for Waiver will be granted, and/or the Assistant Secretary determines that it would be desirable for public policy reasons to grant immediate relief pending a determination on the Petition for Waiver. An Interim Waiver remains in effect for a period of 180 days or until DOE issues its determination on the Petition for Waiver, whichever is sooner, and may be extended for an additional 180 days, if necessary.

On June 16, 1993, Lennox filed an Application for Interim Waiver regarding blower time delay. Lennox's Application seeks an Interim Waiver from the DOE test provisions that require a 1.5-minute time delay between the ignition of the burner and starting of the circulating air blower. Instead, Lennox requests the allowance to test using a 45-second blower time delay when testing its G23 and G26 series of furnaces. Lennox states that the 45-second delay is indicative of how these furnaces actually operate. Such a delay results in an energy savings of approximately 0.7 percent. Since current DOE test procedures do not address this variable blower time delay, Lennox asks that the Interim Waiver be granted.

Previous waivers for this type of time blower delay control have been granted by DOE to Coleman Company, 50 FR 2710, January 18, 1985; Magic Chef Company, 50 FR 41553, October 11, 1985; Rheem Manufacturing Company, 53 FR 48574, December 1, 1988, 56 FR 2920, January 25, 1991, 57 FR 10166, March 24, 1992, and 57 FR 34560, August 5, 1992; Trane Company, 54 FR 19226, May 4, 1989, 56 FR 6021, February 14, 1991, 57 FR 10167, March 24, 1992, and 57 FR 22222, May 27, 1992; Lennox Industries, 55 FR 50224, December 5, 1990, and 57 FR 49700, November 3, 1992; Inter-City Products Corporation, 55 FR 51487, December 14, 1990, and 56 FR 63945, December 6, 1991; DMO Industries, 56 FR 4622, February 5, 1991; Heil-Quaker Corporation, 56 FR 6019, February 14, 1991; Carrier Corporation, 56 FR 6018, February 14, 1991, and 57 FR 38830, August 27, 1992; Amana Refrigeration Inc., 56 FR 27958, June 18, 1991, 56 FR 63940, December 6, 1991, and 57 FR 23392, June 3, 1992; Snyder General Corporation, 56 FR 54960, September 9, 1991; Goodman Manufacturing Corporation, 56 FR 51713, October 15, 1991, and 57 FR 27970, June 23, 1992; Ducane Company, 56 FR 63943, December 6, 1991, and 57 FR 10163, March 24, 1992; Armstrong Air Conditioning, Inc., 57 FR 899, January 9, 1992, 57 FR 10160, March 24, 1992, 57 FR 10161, March 24, 1992, 57 FR 39193, August 28, 1992, and 57 FR 54230, November 17, 1992; Thermo Products, Inc., 57 FR 903, January 9, 1992; Consolidated Industries Corporation, 57 FR 22220, May 27, 1992; Evcon Industries, Inc., 57 FR 47847, October 20, 1992; and Bard Manufacturing Company, 57 FR 53733, November 12, 1992. Thus, it appears likely that the Petition for Waiver will be granted for blower time delay.

In those instances where the likely success of the Petition for Waiver has been demonstrated based upon DOE having granted a waiver for a similar product design, it is in the public interest to have similar products tested and rated for energy consumption on a comparable basis.

Therefore, based on the above, DOE is granting Lennox an Interim Waiver for its G23 and G26 series of furnaces. Pursuant to paragraph (e) of Section 430.27 of the Code of Federal Regulations part 430, the following letter granting the Application for Interim Waiver to Lennox was issued.

Pursuant to paragraph (b) of 10 CFR 430.27, DOE is hereby publishing the "Petition for Waiver" in its entirety. The petition contains no confidential information. DOE solicits comments, data, and information respecting the petition.

Issued in Washington, DC, August 25, 1993.

Robert L. San Martin,

Acting Assistant Secretary, Energy Efficiency and Renewable Energy.

August 25, 1993.

Mr. David W. Treadwell,

Vice President, Research and Development, Lennox Industries Inc., P.O. Box 110877, Carrollton, TX 75011–0877.

Dear Mr. Treadwell: This is in response to your June 16, 1993, Application for Interim Waiver and Petition for Waiver from the Department of Energy (DOE) test procedure regarding blower time delay for the Lennox Industries Inc. (Lennox) G23 and G26 series of furnaces.

Previous waivers for this type of timed blower delay control have been granted by DOE to Coleman Company, 50 FR 2710, January 18, 1985; Magic Chef Company, 50 FR 41553, October 11, 1985; Rheem Manufacturing Company, 53 FR 48574, December 1, 1988, 56 FR 2920, January 25, 1991, 57 FR 10166, March 24, 1992, and 57 FR 34560, August 5, 1992; Trane Company, 54 FR 19226, May 4, 1989, 56 FR 6021, February 14, 1991, 57 FR 10167, March 24, 1992, and 57 FR 22222, May 27, 1992; Lennox Industries, 55 FR 50224, December 5, 1990, and 57 FR 49700, November 3, 1992; Inter-City Products Corporation, 55 FR 51487, December 14, 1990, and 56 FR 63945, December 6, 1991; DMO Industries, 56 FR 4622, February 5, 1991; Heil-Quaker Corporation, 56 FR 6019, February 14, 1991; Carrier Corporation, 56 FR 6018, February 14, 1991, and 57 FR 38830, August 27, 1992; Amana Refrigeration Inc., 56 FR 27958, June 18, 1991, 56 FR 63940, December 6, 1991, and 57 FR 23392, June 3, 1992; Snyder General Corporation, 56 FR 54960, September 9, 1991; Goodman Manufacturing Corporation, 56 FR 51713, October 15, 1991, and 57 FR 27970, June 23, 1992; Ducane Company, 56 FR 63943, December 6, 1991, and 57 FR 10163, March 24, 1992; Armstrong Air Conditioning, Inc., 57 FR 899, January 9, 1992, 57 FR 10160, March 24, 1992, 57 FR 10161, March 24, 1992, 57 FR 39193, August 28, 1992, and 57 FR 54230, November 17, 1992; Thermo Products, Inc., 57 FR 903, January 9, 1992; Consolidated Industries Corporation, 57 FR 22220, May 27, 1992; Evcon Industries, Inc., 57 FR 47847, October 20, 1992; and Bard Manufacturing Company, 57 FR 53733, November 12, 1992. Thus, it appears likely that the Petition for Waiver will be granted for blower time delay.

Lennox's Application for Interim Waiver does not provide sufficient information to evaluate what, if any, economic impact or competitive disadvantage Lennox will likely experience absent a favorable determination on its application. However, in those instances where the likely success of the Petition for Waiver has been demonstrated, based upon DOE having granted a waiver for a similar product design, it is in the public interest to have similar products tested and rated for energy consumption on a comparable basis.

Therefore, Lennox's Application for an Interim Waiver from the DOE test procedure for its G23 and G26 series of furnaces regarding blower time delay is granted.

Lennox shall be permitted to test its G23 and G26 series of furnaces on the basis of the test procedures specified in 10 CFR part 430, subpart B, appendix N, with the modification set forth below:

(i) Section 3.0 in appendix N is deleted and replaced with the following paragraph:

3.0 Test Procedure. Testing and measurements shall be as specified in Section 9 in ANSI/ASHRAE 103–82 with the exception of Sections 9.2.2, 9.3.1, and 9.3.2, and the inclusion of the following additional procedures:

(ii) Add a new paragraph 3.10 in appendix N as follows:

3.10 Gas- and Oil-Fueled Central Furnaces. After equilibrium conditions are achieved following the cool-down test and the required measurements performed, turn on the furnace and measure the flue gas temperature, using the thermocouple grid

described above, at 0.5 and 2.5 minutes after the main burner(s) comes on. After the burner start-up, delay the blower start-up by 1.5 minutes (t−) unless: (1) the furnace employs a single motor to drive the power burner and the indoor air circulation blower, in which case the burner and blower shall be started together; or (2) the furnace is designed to operate using an unvarying delay time that is other than 1.5 minutes, in which case the fan control shall be permitted to start the blower; or (3) the delay time results in the activation of a temperature safety device which shuts off the burner, in which case the fan control shall be permitted to start the blower. In the latter case, if the fan control is adjustable, set it to start the blower at the highest temperature. If the fan control is permitted to start the blower, measure time delay (t−) using a stop watch. Record the measured temperatures. During the heat-up test for oil-fueled furnaces, maintain the draft in the flue pipe within ±0.01 inch of water column of the manufacturer's recommended on-period draft.

This Interim Waiver is based upon the presumed validity of statements and all allegations submitted by the company. This Interim Waiver may be removed or modified at any time upon a determination that the factual basis underlying the application is incorrect.

The Interim Waiver shall remain in effect for a period of 180 days or until DOE acts on the Petition for Waiver, whichever is sooner, and may be extended for an additional 180-day period, if necessary.

Sincerely,

Robert L. San Martin,

Acting Assistant Secretary, Energy Efficiency and Renewable Energy.

June 16, 1993.

Assistant Secretary,

Conservation and Renewable Energy, United States Department of Energy, 1000 Independence Avenue, SW., Washington, DC 20585.

Dear Sir: This is a Petition for Waiver and Application for Interim Waiver submitted pursuant to Title 10 CFR 430.27. Waiver is requested from the uniform test method for measuring energy consumption of furnaces. In the interest of saving energy, Lennox Industries Inc. intends to use a fixed 45 second timing control on our G23 and G26 series of furnaces to gain additional energy savings that are achieved with the use of shorter blower on times. Waiver is requested from the 1.5 minute time delay requirement between the burner ignition and indoor blower activation in the heat-up portion of the test as outlined in appendix N to subpart B of part 430. We have found that under the current method of test the flue gas temperature as measured in the stack reaches a value which is higher than that which will be seen in actual operation resulting in inaccurate comparative data. Our test data indicates that an energy savings of approximately 0.7% on the AFUE is achievable with this reduction in blower delay.

Previous waivers for this type of timed blower delay control have been granted to a number of manufacturers of this type of equipment. Lennox is confident that this waiver will be granted and therefore requests an interim waiver be granted until a final ruling is made.

Manufacturers that market similar equipment are being sent a copy of this petition. If any other information is required, please contact me.

Sincerely,

David W. Treadwell,

Vice President, Research and Development.

[FR Doc. 93–21285 Filed 8–31–93; 8:45 am]

BILLING CODE 6450–01–P

Office of Hearings and Appeals

Cases Filed During the Week of July 30 Through August 6, 1993

During the Week of July 30 through August 6, 1993, the appeals and applications for exception or other relief listed in the appendix to this Notice were filed with the Office of Hearings and Appeals of the Department of Energy.

Under DOE procedural regulations, 10 CFR part 205, any person who will be aggrieved by the DOE action sought in these cases may file written comments on the application within ten days of service of notice, as prescribed in the procedural regulations. For purposes of the regulations, the date of service of notice is deemed to be the date of publication of this Notice or the date of receipt by an aggrieved person of actual notice, whichever occurs first. All such comments shall be filed with the Office of Hearings and Appeals, Department of Energy, Washington, DC 20585.

Dated: August 26, 1993.

George B. Breznay,

Director, Office of Hearings and Appeals.

LIST OF CASES RECEIVED BY THE OFFICE OF HEARINGS AND APPEALS

[Week of July 30 through August 6, 1993]

Date	Name and location of applicant	Case No.	Type of submission
Aug. 2, 1993	Colorado River Commission of Nevada, Washington, DC.	LFA–0311	Appeal of an information request denial. *If granted:* The June 15, 1993 Freedom of Information Request issued by the Western Area Power Administration (WAPA) would be rescinded, and Colorado River Commission of Nevada would receive access to WAPA's plans to build a new Basic Substation near the Hoover Dam.
Aug. 2, 1993	Farmer Union Elevator, Hardin, KY	RR272–109	Request for modification/rescission in the crude oil refund proceeding. *If granted:* The June 8, 1993 Decision and Order (Case No. RF272–81889) issued to Farmer Union Elevator would be modified regarding the firm's application for refund submitted in the Crude Oil refund proceeding.
Aug. 2, 1993	Texaco/Arthur Kelly's Texaco #2, Memphis, TN.	RR321–133	Request for modification/rescission in the Texaco refund proceeding. *If granted:* The June 29, 1993 Decision and Order (Case No. RF321–12718) issued to Arthur Kelly's Texaco #2 would be modified regarding the firm's application for refund submitted in the Texaco refund proceeding.

LIST OF CASES RECEIVED BY THE OFFICE OF HEARINGS AND APPEALS—Continued

[Week of July 30 through August 6, 1993]

Date	Name and location of applicant	Case No.	Type of submission
Aug. 2, 1993 ...	Texaco/Pat Vincent's Texaco, Jackson, MI	RR321–132	Request for modification/rescission in the Texaco refund proceeding. *If granted:* The January 11, 1993 Dismissal Letter (Case No. RF321–10846) issued to Pat Vincent's Texaco would be modified regarding the firm's application for refund submitted in the Texaco refund proceeding.
Aug. 6 1993 ..	Government Accountability Project, Washington, DC.	LFA–0312	Appeal of an Information Request Denial. *If granted:* The July 7, 1993 Freedom of Information Request Denial issued by the Oak Ridge Operations Office would be rescinded, and Government Accountability Project would receive access to information about certain activities of Martin Marietta Energy Systems and Oak Ridge Associated Universities at Oak Ridge National Laboratory.

Date received	Name of refund proceeding/name of refund application	Case No.
7/30/93	Johnston Construction Co. Inc.	RF272–212
8/3/93	Honduras Caual Gas Station.	RF346–57
7/30/93 thru 8/6/93.	Atlantic Richfield Applications received.	RF304–14282 thru RF304–14338
7/30/93 thru 8/6/93.	Texaco Refund applications received.	RF321–19823 thru RF321–19832
7/30/93 thru 8/6/93.	Crude oil refund applications received.	RF272–94808 thru RF272–94829

[FR Doc. 93–21287 Filed 8–31–93; 8:45 am]

BILLING CODE 6450–01–P

Issuance of Decisions and Orders

Office of Hearings and Appeals During the Week of May 31 Through June 4, 1993

During the week of May 31 through June 4, 1993, the decisions and orders summarized below were issued with respect to appeals and applications for other relief filed with the Office of Hearings and Appeals of the Department of Energy. The following summary also contains a list of submissions that were dismissed by the Office of Hearings and Appeals.

Appeals

Chicago Power Group, 6/3/93, LFA–0292

The Chicago Power Group filed an Appeal from a denial by the Bonneville Power Administration of the Department of Energy (DOE/BPA) of a Request for Information which the firm had submitted under the Freedom of Information Act (the FOIA). In considering the Appeal, the DOE found that DOE/BPA properly applied Exemption 4 to the requested information. Accordingly, the Appeal was denied.

James L. Schwab, 6/4/93, LFA–0296

James L. Schwab filed an Appeal from a determination issued to him by the Albuquerque Field Office (AFO) of the Department of Energy (DOE) that denied a Request for Information which Mr. Schwab had submitted under the Freedom of Information Act. Mr. Schwab requested records regarding a background check that the Office of Personnel Management had conducted pursuant to his employment application with the U.S. Marshall's Office. In its determination letter, the AFO stated that no such records existed. In considering the Appeal, the DOE found that an adequate search had been conducted in response to Mr. Schwab's request and the Appeal was denied.

Milton L. Loeb, 6/1/93, LFA–0289

Milton L. Loeb filed an Appeal from determinations issued by the Department of Energy Field Office, Albuquerque (DOE/AL), in response to requests for information submitted under the Freedom of Information Act (FOIA). Loeb requested an executable copy of the Project Authorization and Tracking System (PATS) software, developed under a contract between the DOE and contractor Dames and Moore, and the user's manual and programmer's reference manual for the software. In its determination, DOE/AL found that these items were not agency records subject to the FOIA, and would in any case be exempt from mandatory disclosure under 5 U.S.C. 552(b)(4) (Exemption 4). Loeb also requested Task Order 91–4 under the contract between the DOE and Dames and Moore. DOE/AL provided documents in response to the request for Task Order 91–4, but Loeb contended in his Appeal that DOE/AL had not provided all responsive documents. In considering the Appeal, the DOE found that: (1) DOE/AL fully responded to Loeb's request for Task Order 91–4; (2) the executable version of the PATS software is not an agency record as that term is used in the FOIA; (3) the PATS user's manual and programmer's reference manual are agency records and therefore subject to mandatory disclosure under the Act; (4) withholding of the manuals pursuant to Exemption 4 requires a more adequate justification regarding the harm likely to result from the disclosure than was provided by DOE/AL. Accordingly, the matter was remanded to DOE/AL with instructions to issue a new determination either releasing the manuals or providing a more detailed justification for their withholding. In all other respects, the Appeal was denied.

Power City Electric, Inc., 6/4/93, LFA–0285

The DOE issued a Decision and Order concerning a Motion for Reconsideration filed by Power City Electric, Inc., (Power City). The Motion asked the DOE to reconsider a dismissal letter it had issued to Power City on March 24, 1993. The DOE had dismissed Power City's Appeal under the Freedom of Information Act (FOIA) because Power City had filed its Appeal beyond the statutory deadline for filing an appeal and had sought to require the DOE to answer a question under the FOIA statute. The DOE found the Motion to be without merit and, accordingly, the Motion for Reconsideration was denied.

Remedial Order

Dalco Petroleum Corporation; Economic Regulatory Administration, 6/2/93, HRO–0074, LRZ–0020

The Economic Regulatory Administration (ERA) filed a Motion to Dismiss the Proposed Remedial Order (PRO) issued to Dalco Petroleum Company (Dalco), W. Darryl Zang, and Louis Porter on April 30, 1982. After the issuance of the PRO but before Statements of Objections were filed, Dalco, Zang, and Porter filed for bankruptcy. On January 13, 1993, a similar Motion was granted as to Dalco and Zang. This Motion was filed because the ERA had reached a settlement with Porter which had been approved by the bankruptcy court. The ERA stated that the approval of the settlements by the bankruptcy court renders unnecessary any further review of the PRO as it related to any liability of this party. The DOE agreed. Therefore, the Motion to Dismiss was granted. The PRO was dismissed since there were no remaining parties.

Implementation of Special Refund Procedures

Eason Oil Company; ITT Corp., 6/1/93, LEF-0040

The DOE issued a Decision and Order implementing procedures for the distribution of $7,000,000, plus accrued interest, in alleged overcharges obtained from Eason Drilling Company, formerly Eason Oil Company, (Eason) and ITT Corporation. These funds were remitted by Eason and ITT to the DOE to settle possible pricing violations with respect to Eason's sales of refined petroleum products during the period November 1, 1973 through December 31, 1979. The DOE determined that the funds will be distributed in accordance with the DOE's subpart V refund procedures. Applications for Refund will be accepted from customers who purchased controlled refined petroleum products from Eason during the period covered by the settlement. The specific information to be included in the Applications for Refunds, which must be submitted by August 1, 1994, is included in the Decision.

Supplemental Order

Energy Refunds, Inc., 6/4/93, LFX-0010

The Department of Energy issued an Order disqualifying Energy Refunds, Inc. (ERI) and its officers and employees from representing clients before the Office of Hearings and Appeals (OHA). ERI had filed a refund application in the Texaco refund proceeding on behalf of "Perry North Main Texaco." Previously, ERI had filed applications in the two Gulf refund proceedings on behalf of the same outlet and claiming the same purchase gallons under the name "Perry North Main Gulf." The applicant also altered certain documents submitted in the Texaco proceeding to make it appear that he was a Texaco dealer. When asked to explain, the applicant stated that while his station was Gulf-branded, he obtained some of his product from Texaco and that the purchase volume schedules he submitted in both the Texaco and Gulf proceedings included product obtained from both suppliers.

The DOE noted that representatives of clients before OHA have an obligation to exercise reasonable care to prevent the submission of incorrect information. While the DOE found that ERI did not know that the applicant had altered documents, it would have known if it had examined the documents before submitting them to OHA. Furthermore, the DOE noted that since ERI had filed the Gulf applications, it should have known that the Texaco application claimed the same purchase volumes. The DOE noted that this was not an isolated case. In many other instances, ERI submitted incorrect information, filed duplicate applications, or filed applications on behalf of persons who it should have known were ineligible for refunds. The DOE concluded that it could have no confidence in ERI's ability to represent clients in an honest and competent manner, and found that the firm should be barred from representing clients before OHA.

Refund Applications

Apex Oil Co.; Clark Oil & Refining Corp.; U.S. Oil Co., Inc., 6/3/93, RF342-22

The DOE issued a Decision and Order granting, in part, an Application for Refund filed in the Apex/Clark special refund proceeding on behalf of U.S. Oil Co., Inc. (USOC), a spot purchaser of Clark petroleum products during the refund period. USOC demonstrated that it purchased product from Clark on the spot market during the years 1979 and 1980 as a result of the DOE's November 2, 1979, determination in *U.S. Oil Company, Inc.*, 4 DOE ¶ 81,187 (1979) in which the DOE granted USOC's request for exception relief. The DOE determined that USOC's spot purchases were necessary for the firm to fulfill its own responsibilities under the federal petroleum allocation regulations. In addition, USOC demonstrated that competitive conditions prevented it from passing through any alleged overcharges incurred as a result of these spot purchases. Consequently, the DOE granted USOC a refund of $7,633 (comprised of $5,700 principal and $1,933 interest) for its 1979 and 1980 Clark purchases. USOC failed, however, to similarly rebut the spot purchaser presumption of non-injury with regard to its pre-1979 purchases of Clark product. That portion of USOC's application was consequently denied.

Texaco Inc./Armona Texaco, 6/4/93, RF321-18663

The DOE issued a Decision and Order denying an Application for Refund filed on behalf of Armona Texaco by William Lamb in the Texaco Inc. special refund proceeding. The DOE found that because Armona Texaco did not purchase from Texaco, but sold Texaco product on consignment for an independent distributor of Texaco products, Armona Texaco was in no way injured by any Texaco overcharges and consequently was not entitled to a refund in the Texaco proceeding.

Refund Applications

The Office of Hearings and Appeals issued the following Decisions and Orders concerning refund applications, which are not summarized. Copies of the full texts of the Decisions and Orders are available in the Public Reference Room of the Office of Hearings and Appeals.

Atlantic Richfield Company/Martin Marietta Aluminum, Inc	RF304-13717	06/03/93
Beverly M. Doyle *et al*	RF272-92002	06/03/93
City of Dayton, Ohio	RF272-69628	06/03/93
City of Newport, Kentucky *et al*	RF272-88064	06/03/93
Ellsworth Community School District *et al*	RF272-87005	06/02/93
Empire Gas Corporation/AAA Butane	RF335-65	06/03/93
Enron Corp./Gartman's Butane Co., Inc	RF340-86	06/03/93
Georgetown University *et al*	RF272-91904	06/03/93
Gulf Oil Corporation/Forest Hill Gulf *et al*	RF300-13373	06/02/93
Gulf Oil Corporation/General Oil, Inc. *et al*	RF300-16563	06/04/93
Gulf Oil Corporation/Maplewood Packing Company	RF300-18816	06/02/93
Gulf Oil Corporation/McMaken Oil Company	RF300-18791	06/03/93

Hellenic Lines Limited	RF272–77857	06/02/93
Miami Unified Area School District #40 *et al*	RF272–80249	06/01/93
Murphy Oil Corp./Webb's Service Station *et al*	RF309–1062	06/01/93
O.D. Anderson, Inc	RC272–196	06/03/93
Onalaska School District *et al*	RF272–80930	06/04/93
Shell Oil Company/Briggs Transportation Co. *et al*	RF315–10106	06/03/93
Shell Oil Company/Emerson Electric Company	RF315–2921	06/04/93
Shell Oil Company/Tazewell Oil Co., Inc, Chilton-Chase, Inc	RF315–7346	06/04/93
	RF315–7347	06/04/93
Texaco Inc./Amoco Corp. *et al*	RF321–7048	06/04/93
Texaco Inc./Mission Texaco *et al*	RF321–2298	06/02/93
Texaco Inc./Shelby Motel	RF321–7564	06/04/93
Texaco Inc./West Dade Texaco Service, Gonzalo Santana	RF321–19344	06/01/93
	RF321–19743	06/01/93
William Deam *et al*	RF272–91811	06/04/93

Dismissals

The following submissions were dismissed:

Name	Case No.
Aransas Pass I.S.D	RF272–87413
Arkansaw School District	RF272–81256
Ashby School District	RF272–87416
Athens School District	RF272–87417
Atherton Comm. School District.	RF272–87418
B&D Butane Company	RF304–13517
Bartonville School District	RF272–79044
Belcher Oil Company	RF300–17258
Belleville School District	RF272–87300
Bramblett Gulf	RF300–15914
Brawley Union High	RF272–79176
Caulder Oil Company	RF300–14261
City of Checotah	RF272–83553
Davies Gulf	RF300–13241
East Amwell Township School District.	RF272–87179
Escondido Union High	RF272–87195
Florida Rock and Tank Lines, Inc.	RF300–15129
Florida Rock Industries	RF300–15128
Gilbert Unified District 41	RF272–79026
Greenwood Lake U.F. School	RF272–87381
Hillsboro-Deering Coop Schools.	RF272–87350
Holiday Gulf	RF300–17463
Holiday Gulf in Hickory	RF300–17302
Homes of Merit, Inc	RF300–14056
Hot Springs School District	RF272–87355
Hubert Hallford Gulf	RF300–14463
Iola-Scandinavia School District.	RF272–87403
J.D. Hinkle & Sons, Inc	RF300–14374
Jackson Public Schools	RF272–87405
James R. Phillis	RF304–13837
Jefferson Elementary	RF272–81257
Johnson-Brock Public Schools	RF272–87390
Kaukauna Area School District	RF272–87396
Loetscher's Garage	RF300–15571
Martinez Unified	RF272–79025
Metropolitan Distributors	RF300–14300
Pacific Construction Co	RF321–16603
Paoli Community School Corp.	RF272–79158
Paul Martin's Arco	RF304–13899
Pixley Oil Company	RF309–657
Regional School District 10	RF272–87490
Riverview Int. Unit S.D	RF272–87494
Ronan Elementary #30	RF272–87495
Ronan High School #30	RF272–87496
S&W Texaco	RF321–16724
Sellman's Gulf	RF300–14426
Seneca Twp High School Dist. 160.	RF272–79164
Sid's Auto Service	RF300–12773
Sodus Central School	RF272–87445
South Orange-Maplewood School District.	RF272–87465
South Pasadena Unified S.D	RF272–87466
Springfield Township School District.	RF272–87471
Town of Stoneham	RF272–83482
Vandy's Texaco Service	RF321–16908
Wallington School District	RF272–87328
Warsaw R–IX Schools	RF272–87331
Weeping Water Public Schools.	RF272–87337
West Warwick School District	RF272–87344
Wilmette School District 39	RF272–87316

Copies of the full text of these decisions and orders are available in the Public Reference Room of the Office of Hearings and Appeals, room 1E–234, Forrestal Building, 1000 Independence Avenue SW., Washington, DC 20585, Monday through Friday, between the hours of 1 p.m. and 5 p.m., except federal holidays. They are also available in Energy Management: Federal Energy Guidelines, a commercially published loose leaf reporter system.

Dated: August 26, 1993.

George B. Breznay,

Director, Office of Hearings and Appeals.

[FR Doc. 93–21290 Filed 8–31–93; 8:45 am]

BILLING CODE 6450–01–P

Office of Hearings and Appeals

Issuance of Decisions and Orders During the Week of May 24 Through May 28, 1993

During the week of May 24 through May 28, 1993, the decisions and orders summarized below were issued with respect to appeals and applications for other relief filed with the Office of Hearings and Appeals of the Department of Energy. The following summary also contains a list of submissions that were dismissed by the Office of Hearings and Appeals.

Appeals

Cal Brekke, 5/24/93, LFA–0284

Cal Brekke filed an Appeal from denials by the Office of Scientific and Technical Information (DOE/OSTI) and the Chicago Field Office (DOE/Chicago) of a Request for Information which he had submitted under the Freedom of Information Act. In considering the Appeal, the DOE found that both DOE/OSTI and DOE/Chicago conducted thorough searches for the requested records and followed procedures which were reasonably calculated to uncover all material responsive to the Appellant's request. Accordingly, the Appeal was denied.

Hanford Education Action League, 5/24/93, LFA-0290

The Hanford Education Action League (HEAL) filed an Appeal from a determination issued to it by the Richland Field Office of the DOE in response to a request for information submitted under the Freedom of Information Act (FOIA). In considering the Appeal, the DOE found that the Richland Field Office properly withheld, under Exemption 5 of the FOIA as predecisional, a portion of a chart showing a projection of waste at the Hanford Nuclear Reservation prepared in conjunction with the Multi-Function Waste Remediation Facility under construction at the Hanford facility. Accordingly, the Appeal was denied.

Seehuus Associates, 5/28/93, LFA-0283

Seehuus Associates filed an Appeal from a partial denial by the Oak Ridge Field Office of a Freedom of Information Request. The firm sought records concerning a lease entered into by Martin Marietta Energy Systems, a DOE contractor. Seehuus argued that the search conducted by the Field Office was inadequate and that three documents withheld by the Field Office pursuant to Exemption 4 should have been released. The firm also complained that excessive fees were charged for processing its FOIA request. The DOE found that one document, a real estate appraisal, should be released because its submitter did not object. The DOE found that the other two documents were properly withheld pursuant to Exemption 4. The DOE found that one of these documents was exempt from disclosure under the National Parks test, and the other document, which was voluntarily provided to the DOE, was exempt under the Critical Mass test. The DOE found that the Field Office had conducted a thorough search of records located at the Field Office. However, the DOE found that a search should also have been conducted at DOE's Office of the Inspector General.

The DOE also found that the fee charged Seehuus for processing its FOIA request was excessive. The Field Office charged Seehuus for the personnel time used to photocopy the documents and to prepare them for photocopying, in addition to the five cents per page that DOE regulations specify for copying paper documents. The DOE found that the five cents per page charge was intended to include labor costs associated with copying documents. Accordingly, the Appeal was granted in part.

William Albert Hewgley, 5/28/93, LFA-0291

William Albert Hewgley filed an Appeal from a determination issued by the Office of the Inspector General (OIG) in response to a request from Mr. Hewgley submitted under the Freedom of Information Act (FOIA) and the Privacy Act. In that determination, the OIG stated that documents responsive to Mr. Hewgley's Privacy Act request were contained in a system of records that is exempt from disclosure pursuant to exemptions (j)(2) and (k)(2) of the Privacy Act. Because the OIG conducted a search for information pursuant to the FOIA, the DOE determined that consequently the OIG knows whether any non-exempt material responsive to the Privacy Act request exists. Therefore, Mr. Hewgley's Appeal was denied.

Refund Applications

Shell Oil Company/Commercial Lovelace Motor Freight, Inc.; Lee Way Motor Freight, Inc., 5/25/93, RF315-10100, RF315-10101

The DOE issued a Decision and Order concerning two Applications for Refund filed on behalf of Commercial Lovelace Motor Freight, Inc. (Commercial Lovelace), and Lee Way Motor Freight, Inc. (Lee Way Motor Freight) in the Shell Oil Company special refund proceeding. Both applicants were motor carriers that purchased Shell refined petroleum products during the Shell refund period. In 1985, Lee Way Motor Freight merged into Commercial Lovelace. Subsequently, Commercial Lovelace changed its name to Lee Way Holding Company. Lee Way Holding Company is currently a Chapter 11 Debtor under the jurisdiction of the United States Bankruptcy Court for the Southern District of Ohio, Eastern Division. The Trustee for the Estate in Bankruptcy authorized LK, Inc., a private filing service, to file the Applications under consideration. Because Lee Way Holding Company acquired the stock of Commercial Lovelace and Lee Way Motor Freight, it is thus eligible to receive the refunds resulting from the two companies' purchases during the refund period. Accordingly, Commercial Lovelace Motor Freight, now known as Lee Way Holding Company was granted a principal refund of $1,191, and Lee Way Motor Freight, now known as Lee Way Holding Company, was granted a principal refund of $113.

Standard Oil Co. (Indiana)/Indiana, 5/26/93, RM251-262

The DOE issued a Decision and Order granting a request by the State of Indiana to modify its second stage refund plan so that the remainder of its Amoco II monies, $123,750, will be used to fund the 1993 Fuel Saver Van Program, which will provide restitution to injured consumers of motor gasoline.

Texaco Inc./Fritzen-Halcyon Lijn, Inc., 5/26/93, RF321-16873

The DOE issued a Decision and Order denying an Application for refund filed on behalf of Fritzen-Halcyon Lijn, Inc. (Fritzen) in the Texaco Inc. Subpart V special refund proceeding. In considering Fritzen's Application, the DOE found that its purchase volume claim was based on purchases that appeared to have been the "first sale into U.S. Commerce," and therefore not subject to federal price controls under 10 CFR 212.53(b). Furthermore, a large portion of Fritzen's claimed purchases were made after those products had been decontrolled. Fritzen was provided the opportunity to rebut these findings but failed to do so. Consequently, the DOE concluded that no Texaco overcharges could be attributed to any of Fritzen's purchases. Accordingly, Fritzen's Application for Refund was denied.

Texaco Inc./Styles Texaco, 5/26/93, RF321-17996

The DOE issued a Decision and Order concerning an Application for Refund filed by Styles Texaco (Styles) in the Texaco Inc. Subpart V special refund proceeding. This applicant indirectly purchased Texaco products from Fountain Oil Co. (Fountain), a Texaco jobber. On November 27, 1992, the DOE issued a Decision and Order in the Texaco proceeding which determined that Fountain had been injured in its purchases of Texaco products. *Texaco Inc./Fountain Oil Co.*, Case No RF321-16899 (November 27, 1992). Based on a detailed showing of Fountain's costs and prices during the refund period, the DOE concluded that Fountain had absorbed the full amount of any overcharges it had incurred in its purchases from Texaco rather than passing on the increased costs

associated with those overcharges to its own customers. Therefore, as a customer of Fountan, Styles would not have been charged a higher price as a result of the alleged Texaco overcharges and was not injured by Texaco's pricing. Accordingly, Styles's Application for Refund was denied.

Refund Applications

The Office of Hearings and Appeals issued the following Decisions and Orders concerning refund applications, which are not summarized. Copies of the full texts of the Decisions and orders are available in the Public Reference Room of the Office of Hearings and Appeals.

Atlantic Richfield Company/Central Fuel Services, Inc.	RF304–13809	05/25/93
C.A. Murphy Oil Company	RF304–13810	
Atlantic Richfield Company/Cole's ARCO *et al*	RF304–13504	05/28/93
Atlantic Richfield Company/K&B Service Station	RF304–13909	05/28/93
Atlantic Richfield Company/Lyon Oil Company	RF304–7762	05/28/93
Atlantic Richfield Company/Rehill's ARCO Service #2	RF304–13950	05/28/93
George Cecrle *et al*	RF272–92100	05/27/93
Gulf Oil Corporation/Bottled Gas Distributing Co.	RF300–17767	05/27/93
Gulf Oil Corporation/Moline Gulf Distributor	RF300–18939	05/27/93
Gulf Oil Corporation/Wagram Self Service	RF300–15034	05/28/93
Mini-Mart Gulf	RF300–15035	
Cooper's Gas Mart	RF300–15036	
Cooper Oil Co., Inc.	RF300–15037	
Omaha World Herald Company	RC272–198	05/24/93
Shell Oil Company/Billy Folk Shell Station *et al*	RF315–2134	05/25/93
Shell Oil Company/Interstate Brands Corp.	RF315–6167	05/26/93
Texaco Inc./Gerald W. Sisson Texaco *et al*	RF321–6979	05/24/93
Texaco Inc./Gray's Texaco Service *et al*	RF321–4055	05/25/93
Texaco Inc./Krullis Service *et al*	RF321–11038	05/27/93
Texaco Inc./Lee's Texaco Service *et al*	RF321–4966	05/28/93
Texaco Inc./McDaniel Texaco *et al*	RF321–16921	05/27/93
Texaco Inc./Newport Electric Corporation	RF321–19708	05/25/93
Texaco Inc./Osco Incorporated *et al*	RF321–5115	05/27/93
Texaco Inc./Yeagy's Texaco	RR321–88	05/28/93
Ysleta Texaco	RR321–95	
Village of Cedarville, *et al*	RF272–83868	05/24/93
Westmoreland Central School *et al*	RF272–92262	05/28/93
William Walcott *et al*	RF272–92602	05/27/93

Dismissals

The following submissions were dismissed:

Name	Case No.
Blue & White Lines, Inc.	RF300–15173
Borough of Conshohocken	RF272–83325
Borough of Townada	RF272–83550
Calaveras Cement Company	RD272–25984
City of Bennettsville	RF272–83537
City of Gallipolis	RF272–83478
City of Webster Groves	RF272–83501
City of West Haven	RF272–83346
Conotton Valley Union Local School.	RF272–87147
Coopers Creek Chemical Corporation.	RF272–93951
Crawfordsville Community School.	RF272–87154
Frankfort Schuyler Central School.	RF272–87215
Gallia County, Ohio	RF272–86094
George R. Brown Jr.	RF300–14527
Haworth School District	RF272–87062
Helena Elementary #1	RF272–87066
Helena High School #1	RF272–87067
Indian Valley Local School District.	RF272–87122
L.J. Taylor Distributor	RF300–15332
Lynwood Unified	RF272–87076
Morris Plains Borough School District.	RF272–87105
Mt. Angel School District 101	RF272–87040
Mt. Pleasant Central School	RF272–87108
Nelsonville-York City School District.	RF272–87115
New Home Independent School District.	RF272–87121
Newport City Elementary School District.	RF272–87127
Nishna Valley Community School.	RF272–87129
North Wood R IV School District.	RF272–87134
Orcas Island School District	RF272–87145
Otto Henn, Inc.	RF300–17129
Parker Oil Inc.	RF300–15101
Roy Liddell	RF300–17295
Seneca Valley School District	RF272–87054
Sherrill Oil Company	RF321–17964
Standard Construction Company, Inc.	RF300–17310
State of Indiana	RQ251–586
Town of Reading	RF272–83360
Uber's Gulf	RF300–17292
Village of Ridgefield Park	RF272–83533
Zion School District #6	RF272–81445

Copies of the full text of these decisions and orders are available in the Public Reference Room of the Office of Hearings and Appeals, room 1E–234, Forrestal Building, 1000 Independence Avenue, SW., Washington, DC 20585, Monday through Friday, between the hours of 1 p.m. and 5 p.m., except federal holidays. They are also available in "Energy Management: Federal Energy Guidelines," a commercially published loose leaf reporter system.

Dated: August 26, 1993.

George B. Breznay,

Director, Office of Hearings and Appeals.

[FR Doc. 93–21289 Filed 8–31–93; 8:45 am]

BILLING CODE 6450–01–P

Issuance of Decisions and Orders During the Week of May 10 Through May 14, 1993

Office of Hearings and Appeals

During the week of May 10 through May 14, 1993, the decisions and orders summarized below were issued with respect to appeals and applications for exception or other relief filed with the Office of Hearings and Appeals of the Department of Energy. The following summary also contains a list of submissions that were dismissed by the Office of Hearings and Appeals.

Appeals

David DeKok, 5/11/93, LFA–0282

David DeKok, (DeKok) filed an Appeal from a partial denial by the Department of Energy's (DOE) Idaho Field Office (Idaho) of a Request for a Fee Waiver filed by DeKok under the Freedom of Information Act. In considering the Appeal, the DOE found that Idaho had incorrectly determined that DeKok's commercial interest in obtaining the requested information outweighed the public's interest in its disclosure, since the DOE had previously found DeKok to be acting as a representative of the news media. In its Decision, the DOE also provided Idaho with further guidance concerning the proper application of the DOE's fee waiver regulations to DeKok's request. As a result of its determination, the DOE remanded the matter to Idaho with instructions to process the request in accordance with the guidance provided in the Decision.

John Lohrenz, 5/11/93, LFA–0280

John Lohrenz filed an Appeal from a denial by the Pittsburgh Energy Technology Center of the Department of Energy (DOE/PETC) of a Request for Information which he had submitted under the Freedom of Information Act. In considering the Appeal, the DOE found that DOE/PETC conducted a thorough search for the requested records and followed procedures which were reasonably calculated to uncover all material responsive to the Appellant's request. Accordingly, the Appeal was denied.

Phillips, Nizer, Benjamin, Krim & Ballon, 5/13/93, LFA–0286

Phillips, Nizer, Benjamin, Krim & Ballon filed an Appeal from a determination issued to it on March 19, 1993 by the Director of the Office of Management and Information Systems, Economic Regulatory Administration of the Department of Energy (DOE). In that determination, the Director stated that the DOE did not find any documents responsive to the appellant's information request under the Freedom of Information Act. In considering the Appeal, the DOE confirmed that the Director followed procedures which were reasonably calculated to uncover responsive documents. Accordingly, the DOE denied the appellant's request.

Request for Exception

Cunningham, 5/12/93, LEE–0038

Cunningham filed an Application for Exception from the requirement that it file Form EIA–782B, entitled "Resellers'/Retailers' Monthly Petroleum Product Sales Report." The exception request, if granted, would permit Cunningham to be exempted from filing Form EIA–782B. The Department of Energy issued a Decision and Order which determined that the exception request be denied since the firm had not shown that it is experiencing a serious hardship, gross inequity, or unfair distribution of burdens.

Refund Applications

Diamond Transportation System, 5/12/93, RC272–194

The DOE issued a Supplemental Order concerning an Application for Refund submitted in the subpart V crude oil refund proceeding by Diamond Transportation System. In an earlier Supplemental Order (Case No. RC272–180), the DOE ordered the Applicant to remit $111, the amount of its subpart V crude oil refund, because the Applicant had received a refund from the Surface Transporters escrow in the Stripper Well refund proceedings. After the Supplemental Order was issued, the DOE was notified that the sole owner and operator of Diamond Transportation is deceased. The DOE modified its earlier Decision and will not require Diamond Transportation to remit its $111 subpart V crude oil refund.

Nabisco Brands, Inc., 5/10/93, RR272–103

Nabisco Brands, Inc. filed a Motion for Reconsideration concerning a March 12, 1993 decision that rescinded a $263,122 crude oil refund previously granted to the firm. See *Nabisco Brands, Inc.*, 23 DOE ¶85,056 (1993) (the Rescission Order). In the Rescission Order, the DOE held that Nabisco's 1986 filing of a Surface Transporter (ST) Waiver pursuant to the Stripper Well Settlement Agreement constituted the waiver of the right to a crude oil refund. In considering Nabisco's request for reconsideration of the Rescission Order, the DOE cited its own and court precedent holding that: (i) The filing of the ST Waiver constituted a waiver of all claims of all affiliates to a crude oil refund and (ii) the Office of Hearings and Appeals is not required to investigate whether the party executing the ST Waiver had the authority to do so. Accordingly, Nabisco's Motion for Reconsideration was denied.

Texaco Inc./Big Three Truck Plaza, 5/14/93, RR321–126

The Department of Energy (DOE) issued a Decision and Order in which it reconsidered an earlier Decision granting a refund of $4,205 to Big Three Truck Plaza (Big Three). In the earlier Decision, the DOE concluded that Big Three's refund should be calculated using a reduced volumetric figure because Big Three purchased its Texaco products on an indirect basis and Big Three's supplier purchased only 10 percent of its refined petroleum products from Texaco. However, in the present Decision, the DOE concluded that Big Three's supplier maintained separate inventories for accounting purposes, and that Big Three's refund should be recalculated using the full volumetric amount. Big Three was therefore granted an additional refund of $16,906.

Texaco Inc./Junior's Texaco, 5/10/93, RF321–2072

The DOE issued a Decision and Order granting in part an Application for Refund filed by Melba McCarty based on purchases made by Junior's Texaco, a retail service station operated by Will McCarty, to whom she was married for a portion of the refund period. Mr. McCarty died intestate in 1986 survived by his second wife and his eight children, including the five children of his marriage to Melba McCarty. The DOE held that Melba McCarty was not eligible for a refund equal to the outlet's entire allocable share based on Mr. McCarty's transferring his property to her prior to his death or on her payment of his funeral expenses. However, the DOE determined that Melba McCarty was entitled to one-half of the outlet's refund for the period in which she was married to Mr. McCarty because the couple formed an economic unit and Melba McCarty was equally injured by Texaco's alleged overcharges during that period. The DOE found that Mr. McCarty would have been entitled to the remainder of the outlet's refund. Since, under Florida law, Mr. McCarty's

children were entitled to one-half of his estate, the DOE determined that Melba McCarty was entitled to a refund on behalf of her five children, who had authorized her to combine their claims with hers. The total refund approved in this Decision was $1,006 ($742 principal and $264 interest.)

Refund Applications

The Office of Hearings and Appeals issued the following Decisions and Orders concerning refund applications, which are not summarized. Copies of the full texts of the Decisions and Orders are available in the Public Reference Room of the Office of Hearings and Appeals.

Atlantic Richfield Company/Faith Oil Company	RF304–11950	05/14/93
Atlantic Richfield Company/Landess ARCO	RF304–13753	05/10/93
B&S ARCO Center	RF304–13760	
Montgomery Ward and Co., Inc	RF304–13833	
Brustuen Farm *et al*	RF272–92325	05/12/93
Ellington School District	RF272–80218	05/14/93
G. Crawford Delivery and Storage	RA272–34	05/10/93
George E. Adeeb *et al*	RF272–90305	05/10/93
Gulf Oil Corporation/Acadiana Gulf Oil Co., Inc	RF300–21738	05/14/93
Gulf Oil Corporation/C.M. Spiegel Oil Company	RF300–13044	05/12/93
Gulf Oil Corporation/C.H. Martin and Son *et al*	RF300–13602	05/12/93
Gulf Oil Corporation/Convenience Corner, Inc. *et al*	RF300–17941	05/14/93
Gulf Oil Corporation/J.H. Herring	RF300–17231	05/14/93
Gulf Oil Corporation/Lee Way Motor Freight, Inc	RF300–12895	05/14/93
Gulf Oil Corporation/Tampa Electric Company *et al*	RF300–18166	05/10/93
Gulf Oil Corporation/Town and Country Gulf	RF300–13493	05/12/93
C.R. Lee and Sons	RF300–13494	
Hastings Public Schools *et al*	RF272–87060	05/12/93
Marine Fueling Service, Inc	RF272–59180	05/13/93
Marine Fueling Service, Inc	RD272–59180	
Memphis Light, Gas and Water Division	RF272–69215	05/12/93
Mike Langdon *et al*	RF272–92200	05/12/93
Shell Oil Company/Dixie Oil Co., Inc	RF315–8779	05/13/93
Wall Shell Service, Inc	RF315–9131	
Air India International	RF315–9646	
Texaco Inc./Darlington Texaco *et al*	RF321–15801	05/13/93
Texaco Inc./Falmouth Texaco *et al*	RF321–10337	05/13/93
Texaco Inc./Gateway Texaco *et al*	RF321–16220	05/12/93
Texaco Inc./Gene and Leo's Texaco *et al*	RF321–9926	05/13/93
Texaco Inc./Hardwick Texaco *et al*	RF321–1957	05/12/93
Texaco Inc./John's Texaco	RF321–19719	05/12/93
Texaco Inc./Paul Brady's Five Point Texaco	RF321–19721	05/12/93
Texaco Inc./Robert Middleton *et al*	RF321–4335	05/12/93
Texaco Inc./Station's Texaco Service *et al*	RF321–16645	05/13/93
Town of Marblehead	RC272–197	05/14/93
Upson County School District *et al*	RF272–79214	05/13/93

Dismissals

The following submissions were dismissed:

Name and Case No.

Alford Reed's Texaco #2; RF321–12374
Circle G Petroleum; RF321–18216
F. Douglas Johnson; RF304–1466
Gilman Paper Company; RF272–74544
Goshen Texaco; RF321–12675
Hall-Owens; RF300–16285
Kinbro Petroleum, Inc.; RF300–16899
Leonard's Texaco #1; RF321–7192
Leonard's Texaco #2; RF321–7193
Nautical Yacht Basin of Florida, Inc.; RF300–16444
Ray's Villa Plaza Auto Center; RF321–14594
Sioux Valley School District 5–5; RF272–80672
Spencer Texaco; RF321–12810
Tesoro Petroleum Corporation; RF339–2
Verdurmen Oil Company; RF304–13855
Verdurmen Oil Company; RF304–13856
Wadsworth Texaco; RF321–12807
Wayne Chambers Texaco; RF321–12668

Copies of the full text of these decisions and orders are available in the Public Reference Room of the Office of Hearings and Appeals, room 1E–234, Forrestal Building, 1000 Independence Avenue, SW, Washington, DC 20585, Monday through Friday, between the hours of 1 p.m. and 5 pm, except federal holidays. They are also available in Energy Management: Federal Energy Guidelines, a commercially published loose leaf reporter system.

Dated: August 26, 1993.

George B. Breznay,

Director, Office of Hearings and Appeals.

[FR Doc. 93–21288 Filed 8–31–93; 8:45 am]

BILLING CODE 6450–01–P

Office of Hearings and Appeals

Implementation of Special Refund Procedures

AGENCY: Office of Hearings and Appeals, Energy.

ACTION: Notice of implementation of special refund procedures.

SUMMARY: The Office of Hearings and Appeals (OHA) of the Department of Energy (DOE) announces the procedures for disbursement of $5,048,242.96, plus accrued interest, in alleged crude oil overcharges obtained by the DOE under the terms of a consent order or a settlement agreement between Kaiser International Corporation, Case No. KEF–0125, Century Resources Development, Inc., Case No. KEF–0126, or Entex Petroleum, Inc., Case No. KEF–0127. The OHA has determined that the funds obtained from these three firms, plus accrued interest, will be distributed in accordance with the DOE's Statement of Modified Restitutionary Policy in Crude Oil Overcharges.

DATES: Applications must be postmarked by June 30, 1994.

ADDRESSES: Applications for Refund must be filed in duplicate, addressed to "Subpart V Crude Oil Overcharge Refunds", and sent to: Office of Hearings and Appeals, Department of

Energy, 1000 Independence Avenue, SW., Washington, DC 20585.

FOR FURTHER INFORMATION CONTACT: Richard T. Tedrow, Deputy Director, Office of Hearings and Appeals, 1000 Independence Avenue, SW., Washington, DC 20585, (202) 586–8018.

SUPPLEMENTARY INFORMATION: In accordance with 10 CFR 205.282(b), notice is hereby given of the issuance of the Decision and Order set out below. The Decision and Order sets forth the procedures that the DOE has formulated to distribute to eligible claimants $5,048,242.96, plus accrued interest, obtained by the DOE under the terms of a consent order or a settlement agreement entered into with Kaiser International Corporation, Century Resources Development, Inc., or Entex Petroleum, Inc. The funds were paid by the three firms towards the settlement of alleged violations of the DOE price and allocation regulations involving the sale of crude oil during the period of price controls.

The OHA will distribute these funds in accordance with the DOE's Statement of Modified Restitutionary Policy in Crude oil Overcharges, 51 FR 27,899 (Aug. 4, 1986) (MSRP). Under the MSRP, crude oil overcharge monies are divided between the Federal Government, the States, and the injured purchasers of covered refined petroleum products. Refunds to the States will be distributed in proportion to each State's consumption of petroleum products during the price control period. Refunds to eligible purchasers will be based on the number of gallons of petroleum products which they purchased, and the degree to which they can demonstrate injury.

Applications for Refund must be postmarked by June 30, 1994. Any claimant which has already filed a Subpart V crude oil refund application should not file another application, as the prior application will be deemed to be filed in these crude oil refund proceedings. Instructions for the completion of crude oil refund applications are set forth in the Decision that immediately follows this notice. Refund claims should be sent to the address listed at the beginning of this notice.

Unless labeled as "confidential," all submissions may be made available for public inspection between the hours of 1 p.m. and 5 p.m., Monday through Friday, except federal holidays, in the Public Reference Room of the Office of Hearings and Appeals, located in Room 1E–234, 1000 Independence Avenue, SW., Washington, DC 20585.

Dated: August 26, 1993.

George B. Breznay,

Director, Office of Hearings and Appeals.

Decision and Order of the Department of Energy

Implementation of Special Refund Procedures

August 26, 1993.

Names of Firms: Kaiser International Corporation, Century Resources Development, Inc., and Entex Petroleum, Inc.

Date of Filings: January 31, 1989.

Case Numbers: KEF–0125, KEF–0126, KEF–0127.

The Economic Regulatory Administration (ERA) of the Department of Energy (DOE) has filed a Petition for the Implementation of Special Refund Procedures with the Office of Hearings and Appeals (OHA) to distribute the funds which three firms, Kaiser International Corporation, Century Resources Development, Inc., and Entex Petroleum, Inc., remitted to the DOE pursuant to a consent order or a settlement agreement entered into between each of the firms and the DOE. In satisfaction of their responsibilities under these instruments, the three firms have tendered to the DOE an aggregate of $5,048,242.96, to which $2,182,400.20 in interest has accrued as of July 31, 1993. In accordance with the procedure found in 10 CFR 205.281 of the subpart V regulations, 10 CFR part 205, subpart V, the ERA requests in its petitions that OHA establish special procedures to make refunds in order to remedy the effects of the alleged regulatory violations which were resolved by the particular consent order or settlement agreement. We have considered the ERA's petitions that we implement a subpart V proceeding with respect to the consent order funds for each of the three firms. 10 CFR 205.282. We have determined that such a proceeding is appropriate in each case. *Id.* This Decision and Order sets forth OHA's plan to distribute these funds.

I. Background

A. Jurisdiction and Authority

The subpart V regulations set forth general guidelines which may be used by OHA in formulating and implementing a plan of distribution of funds received as a result of an enforcement proceeding, a consent order, or a settlement agreement. The DOE policy is to use the subpart V process to distribute such funds where the DOE cannot readily identify the persons who may have been injured as a result of actual or alleged violations of the Mandatory Petroleum Price and Allocation Regulations or where the DOE cannot ascertain the amount of the refund each person should receive. *DeMenno-Kerdoon*, 23 DOE ¶ 85,046 at 88,112 (1993). For a more detailed discussion of subpart V and the authority of OHA to fashion procedures to distribute refunds, see Petroleum Overcharge Distribution and Restitution Act of 1986, Pub. L. No. 99–509, 100 Stat. 1874, 1881 (1986) (codified at 15 U.S.C. §§ 4501–07 (PODRA)); *Office of Enforcement*, 9 DOE ¶ 82,508 at 85,046–54 (1981); *Office of Enforcement*, 8 DOE ¶ 82,597 at 85,393–99 (1981).

B. General Crude Oil Refund Policy

On July 28, 1986, the DOE issued the *Statement of Modified Restitutionary Policy in Crude Oil Cases*, 51 FR 27,899 (Aug. 4, 1989) (MSRP). The MSRP, which was issued as a result of the court-approved *Final Settlement Agreement* in *In re: Department of Energy Stripper Well Exemption Litig.*, M.D.L. No. 378 (D. Kan. 1986), *reprinted in*, 6 Fed. Energy Guidelines (CCH) ¶ 90,509 (1986) (M.D.L. No. 378 Final Settlement Agreement), provides that crude oil overcharge funds will be divided among the Federal Government, the States, and the injured purchasers of covered petroleum products. Under the MSRP, up to twenty percent of these crude oil overcharge funds will be reserved to satisfy valid claims by injured covered petroleum products purchasers. The remaining eighty percent, and any monies remaining after all valid claims are paid, are to be disbursed in equal amounts to the Federal Government and the States.

Shortly after the issuance of the MSRP, OHA issued an Order that announced its intention to apply the MSRP in all subpart V proceedings involving funds collected as a result of actual or alleged crude oil violations. *Order Implementing Modified Statement of Restitutionary Policy Concerning Crude Oil Overcharges*, 51 FR 29,689, 29,691 (Aug. 20, 1986) (MSRP Implementing Order). This Order also provided a thirty day period for interested parties to file comments or objections to the proposed use of the MSRP as the groundwork for evaluating claims in crude oil refund proceedings and on the appropriate procedures to follow in processing refund applications in crude oil refund proceedings.

After receiving numerous comments, OHA issued a Notice on April 6, 1987 which analyzed the comments and set forth generalized procedures to assist claimants that file refund applications for crude oil monies under the subpart V regulations. *Implementation of Special Refund Procedures*, 52 FR 11,737 (Apr. 10, 1987) (Crude Oil Procedures Notice). Generally, under the Crude Oil Procedures Notice, all claimants will be required to (1) document their purchase volumes of petroleum products during the August 19, 1973 through January 27, 1981 crude oil price control period, and (2) prove that they were injured by the alleged crude oil overcharges. OHA also specified that end-users of petroleum products whose businesses were unrelated to the petroleum industry will be presumed to have been injured by the alleged crude oil overcharges and need not submit any additional proof of injury beyond documentation of their purchase volumes. *See, e.g., City of Columbus*, 16 DOE ¶ 85,550 at 89,099 (1987). Additionally, OHA stated that crude oil refunds will be calculated on the basis of a per gallon (or "volumetric") refund amount, which is obtained by dividing the crude oil refund pool by the total consumption of petroleum products in the United States during the crude oil price control period.

OHA has applied these procedures in numerous cases since the Crude Oil Procedures Notice was issued. *See e.g.*,

DeMenno-Kerdoon, 23 DOE at 88,113–14; *Richome Oil & Gas Co.*, 23 DOE ¶85,035 at 88,085 (1993); *Texas Int'l Co.*, 22 DOE ¶85,230 at 88,614 (1992); *Energy Corp. of America, Inc.*, 22 DOE ¶85,019 at 88,052 (1992); *Corum Energy*, 21 DOE ¶85,358 at 89,066 (1991); *Apex Oil Co.*, 21 DOE ¶85,341 at 89,018 (1991); *Petrol Products, Inc.*, 20 DOE ¶85,436 at 89,010 (1990); *Bi-Petro, Inc.*, 20 DOE ¶85,071 at 88,141 (1990); *Goldsberry, Hood*, 18 DOE ¶85,902 at 89,476–77 (1989); *New York Petroleum, Inc.*, 18 DOE ¶85,435 at 88,703–04 (1988) (*New York Petroleum*); Shell Oil Co., 17 DOE ¶85,204 at 88,405–06 (1988); *Ernest A. Allerkamp*, 17 DOE ¶85,079 at 88,175–76 (1988) (*Allerkamp*). Further, the procedures have been approved by the Federal Courts. Thus, a challenge from a group of States claiming a violation of the M.D.L. No. 378 Final Settlement Agreement based on OHA use of injury presumptions and improper refund calculations was denied *in toto* by the Federal District Court for the District of Kansas. The court found that the M.D.L. No. 378 Final Settlement Agreement "does not bar OHA from permitting claimants to employ reasonable presumptions in affirmatively demonstrating injury entitling them to a refund." *In re Department of Energy Stripper Well Exemption Litig.*, 671 F. Supp. 1318 (D. Kan. 1987), aff'd in part, 857 F.2d 1481 (Temp. Em. Ct. App. 1988). In addition, the court held that, as specified in the Crude Oil Procedures Notice, OHA could base calculate refund calculations on a portion of the M.D.L. No. 378 overcharges. *Id.* at 1323–24. Therefore, the use of these procedures are entirely proper in Subpart V crude oil cases.

C. Individual Firms/Funds Considered in This Decision and Order

1. Kaiser

On May 3, 1983, the ERA issued a Proposed Remedial Order (PRO) to Kaiser Aluminum International Corporation (Kaiser Aluminum), a reseller of crude oil as that term was defined in 10 CFR 212.31, and which was therefore subject to the provisions governing resales of crude oil set forth in 10 CFR part 212, subpart L. In particular, the PRO charged Kaiser Aluminum with charging prices for crude oil in excess of its actual costs without providing any service or function traditionally and historically associated with the resale of crude oil. Kaiser Aluminum's actions were alleged to have violated 10 CFR 212.186 (the "layering" regulation), 10 CFR 210.62(c) (the "normal business practices" rule), and 10 CFR 205.202 (the "anti-circumvention" rule) for the period May 1978 through December 1980. The PRO alternately alleged that Kaiser Aluminum sold crude oil at prices which exceeded its Permissible Average Markup. In adjudicating the PRO, OHA found that Kaiser Aluminum's transactions violated the "layering" regulation resulting in unlawful overcharges of $2,399,552.61. Accordingly, the DOE issued a Remedial Order against Kaiser Aluminum and its successor in interest Kaiser International Corporation. *Kaiser Aluminum Int'l Corp.*, 15 DOE ¶83,007 (1986). OHA also determined that any money collected should be distributed under the subpart V procedure and the MSRP. *Id.* at 86,090–91.

After OHA issued the Remedial Order, Kaiser Aluminum docketed an appeal of this Remedial Order with the Federal Energy Regulatory Commission (FERC). FERC Case No. RO87–5–000. FERC urged settlement in this and a number of other "layering" cases then-pending before the Commission. *See Traco Petroleum Co.*, 41 FERC ¶61,286 at 61,761 (1987). Thereafter, the parties settled the Remedial Order, and all other DOE claims arising out of the Mandatory Petroleum Price Regulations during the period August 17, 1973 through January 27, 1981, in a consent order for the sum of $1.95 million. That amount has been paid and is being held in an interest-bearing account pending a determination regarding the proper distribution of the principal amount, and the $651,325.73 in interest which has accrued as of July 31, 1993.

2. Century Resources

Century Resources Development, Inc. (Century Resources) is a reseller of crude oil as was defined in 10 CFR 212.31 and was subject to the price regulations found in 10 CFR part 212 subparts F and L. After conducting an audit, the ERA found reason to believe that Century Resources may have violated those regulations. ERA, Century Resources, and its parent Energy Resources Development, Inc. (Energy Resources), agreed to settle, without admission of liability, these alleged violations and any other violations of the Mandatory Petroleum Price Regulations that the DOE may have been able to assert for activities during the period October 1977 through January 27, 1981. Accordingly, in a consent order with the DOE, Century Resources and Energy Resources agreed to pay in installments $1.5 million plus interest. The amount paid by the firms totaled $1,663,582.31. These funds have been transmitted by the firm and are being held in an interest-bearing account pending a determination regarding the proper distribution of the principal amount, and the $911,834.98 in interest which has accrued as of July 31, 1993.

3. Entex Petroleum

Entex Petroleum, Inc. (Entex) is a producer of crude oil as that term was defined in 10 CFR 212.31, and was therefore subject to the provisions of 10 CFR, part 212, subpart D which governed first sales of crude oil. On July 14, 1978, the ERA issued a PRO to Entex alleging that Entex miscertified and impermissibly sold at upper-tier prices crude oil produced from certain properties during the period September 1973 through February 1977. After considering the firm's Statement of Objections and remanding certain portions of the case to the ERA, OHA issued the PRO as a final Remedial Order. *Entex Petroleum, Inc.*, 5 DOE ¶ 83,012 (1980). The remedial portions of that order directed Entex to recalculate the Base Production Control Levels for certain properties. *Id.* at 86,108–09. It also required Entex to sell crude oil from four properties at no cost to two identified customers until $324,484.01 in overcharges, plus interest, had been satisfied. *Id.* at 86,109. In addition, the firm was to perform a self-audit and calculate allowable profits on sales from the overcharging properties and make restitution by refund, plus interest, to other customers. If it could not do this, the firm was to submit a check to the DOE for the appropriate amount. *Id.*

Entex performed none of the actions required to comply with the OHA order. The ERA, therefore, submitted a Motion for Modification relying on the decontrol of crude oil as a significantly changed circumstance warranting modification of the remedial provision. OHA agreed with the ERA and ordered that restitution be made through the subpart V mechanism, clarified the rate of interest on the outstanding overcharges, and once again ordered the self-audit performed. *Economic Regulatory Admin./Entex Petroleum, Inc.*, 11 DOE ¶ 83,023 (1984). The remanded portions of the original PRO were then issued by the ERA as a new PRO and considered by OHA. After considering the firm's Statement of Objections, OHA found that Entex had miscertified and impermissibly sold crude oil produced from two properties as stripper well production. Accordingly, the DOE issued a Supplemental Remedial Order instructing the firm to remit $21,582.31 plus interest for distribution under the subpart V procedures, in addition to its restitutionary obligations under the prior Remedial Order as modified. *Entex Petroleum, Inc.*, 12 DOE ¶ 83,003 (1984), *modified*, 12 DOE ¶ 82,507 (1984).

Entex next joined litigation brought by Sun Company, Inc. challenging the DOE practice of asserting liability against "vicarious" third-party well operators for overcharges attributable to working or royalty interests. *See Sun Co.* v. *United States*, 594 F. Supp. 652 (D. Del. 1984) (wherein the litigation is described in some detail). The DOE counterclaimed for enforcement of the Remedial Orders. Eventually, Entex and the DOE agreed to settle this matter. The DOE agreed to drop its counterclaim. In return, Entex agreed to drop its intervention in the Sun Company litigation and pay an amount to settle the adjudicated liability in the Remedial Orders and potential liability as a result of the self-audit performed as ordered in the Remedial Orders, plus interest on both amounts. The amount paid by the firm totaled $1,434,660.65. This money has been deposited in an interest- bearing account pending a proper distribution of the principal amount and the $619,239.49 in interest accrued as of July 31, 1993.

II. The Proposed Decision and Order and Comments Received Thereon

A. The Proposed Decision and Order

In response to the three Petitions for the Implementation of Special Refund Procedures filed by the ERA, OHA issued a Proposed Decision and Order (PD&O) which established tentative procedures to distribute the amounts obtained from the three firms, plus accrued interest, for the alleged crude oil violations. OHA tentatively concluded that, in accordance with long-standing, court-approved precedents, the funds in these cases should be distributed in accordance with the MSRP, the MSRP Implementing Order, and the Crude Oil Procedures Notice. In particular, OHA proposed, pursuant to the MSRP, to initially reserve twenty percent of the funds for direct restitution to applicants

who claim that they were injured by the alleged crude oil violations. The remaining eighty percent of the funds would be distributed to the Federal Government for and the States for indirect restitution. In particular, forty percent of the funds would be apportioned for the Federal Government, and forty percent would be allocated for the States. The PD&O further proposed that after all valid claims were paid, any remaining funds in the claims reserve also would be divided equally between the Federal Government and the States.

In the PD&O, OHA proposed to require applicants for refunds to document their purchase volumes of covered petroleum products during the period of price controls and to prove that they were injured by crude oil overcharges. The PD&O stated that end-users of petroleum products whose businesses were unrelated to the petroleum industry could use a presumption that they absorbed the crude oil overcharges. Therefore, it was proposed that such claimants need not submit any further proof of injury to receive a refund. OHA also proposed to calculate refunds on the basis of a volumetric refund amount, as described in the Crude Oil Procedures Notice. Comments were solicited regarding the tentative distribution process set forth in the PD&O. As discussed below, one set of comments was received.

B. Analysis of the Kalodner Comments

Philip P. Kalodner filed the only comments received in these proceedings on behalf of a group of utilities, transporters, and manufacturers. The comments urged us to abandon the forty-forty-twenty percentage allocation between the Federal Government, the States, and the crude oil applicants. Instead, the comments insist that 100 percent of the funds in these proceedings be reserved for direct payment to crude oil applicants. Only in this way, the comments claim, can "full parity" in refund amounts be achieved.

Mr. Kalodner has filed virtually identical comments in numerous crude oil refund implementation proceedings. *See, e.g., Permian Corp.*, 23 DOE ¶ 85,034 at 88,073–74 (1993); *Salomon, Inc.*, 22 DOE ¶ 85,006 at 88,019 (1992); *Stanco Petroleum, Inc.*, 21 DOE ¶ 85,373 at 89,101–02; *Diamond Shamrock R&M, Inc.*, 21 DOE ¶ 85,352 at 89,051–52 (1991); *Seneca Oil Co.*, 21 DOE ¶ 85,327 at 88,970 (1991) (*Seneca Oil*); *Quintana Energy Corp.*, 21 DOE ¶ 85,032 at 88,114 (1991); *Tesoro Petroleum Corp.*, 20 DOE ¶ 85,665 at 89,524 (1990); *Northeast Petroleum Industries, Inc.*, 20 DOE ¶ 85,405 at 88,935 (1990); *Texaco, Inc.*, 19 DOE ¶ 85,200 at 88,371–72 (1989); *Goldsberry, Hood*, 18 DOE at 89,476; *Getty Oil Co.*, 18 DOE ¶ 85,808 at 89,302 (1989); *Wickett Refining Co.*, 18 DOE ¶ 85,659 at 89,079–80 (1989); *Amorient Petroleum Co.*, 18 DOE ¶ 85,595 at 88,976–77 (1989) (*Amorient*); *Lone Star Oil & Chemical Co.*, 18 DOE ¶ 85,559 at 88,912–13 (1989); *New York Petroleum*, 18 DOE at 88,701. We, therefore, need not repeat the extensive analysis of the Kalodner comments found in those cases. As these decisions indicate, we have carefully considered this line of argument and have consistently rejected it because the DOE has never assured crude oil claimants a precise level of restitution, *Amorient*, 18 DOE at 88,976, and because Mr. Kalodner has never produced any evidence that the twenty percent reserve will be inadequate to pay crude oil claimants. *Id.* at 88,977; *Seneca Oil*, 21 DOE at 88,970.

Further, the division ratio of crude oil money has been twice reviewed and twice accepted by the Federal Courts. First, the division ratio has been accepted by the District Court in Kansas which approved the M.D.L. No. 378 Final Settlement Agreement (which, as previously noted, was the genesis of the MSRP and the distribution percentages between the governments and the Subpart V applicants). *See In re Department of Energy Stripper Well Exemption Litig.*, 653 F. Supp. 108, 114, 116, 118 (D. Kan. 1986), *off'd in part*, 855 F.2d 865 (Temp. Em. Ct. App. 1988). That court held the M.D.L. No. 378 Final Settlement Agreement and its apportionment of the crude oil funds to be "fair, reasonable and adequate to all concerned parties." Id. at 116. Second, after "an independent investigation," of a different, though related, settlement agreement, the Federal District Court in Delaware also found the forty-forty-twenty division ratio to be "reasonable, equitable and fair." *Getty Oil Co.* v. *Department of Energy*, 3 Fed. Energy Guidelines (CCH) ¶ 26,611 at 26,960, 26,964 (D. Del. 1988). Thus, as in all the cases cited above, we agree with the Federal Courts and we reject Mr. Kalodner's argument that the twenty percent reserve is inadequate to provide fair restitution to crude oil Subpart V claimants.

III. Refund Procedures

A. Refund Claims

We will adopt the DOE's standard crude oil refund procedures to distribute the monies in all three consent order accounts considered in this Decision and Order. Thus, as we noted in the PD&O, we have chosen to initially reserve twenty percent of each of these funds, plus accrued interest, for direct refunds to claimants. This will insure that sufficient funds will be available for injured parties. Accordingly, we will direct the DOE Office of the Controller to transfer a total of $1,009,648.60 plus accrued interest from the three subaccounts for the firms considered in this Decision and Order to the subaccount for crude oil claimants. This reserve figure may be reduced later if circumstances so warrant.

OHA will evaluate crude oil refund claims in a manner similar to that used in subpart V proceedings to evaluate claims based on actual and alleged refined product overcharges. See, *e.g., Mountain Fuel Supply Co.*, 14 DOE ¶ 85,475 at 88,869 (1986). Under these procedures in crude oil cases, as in non-crude oil cases, claimants will be required to (1) document their purchase volumes of covered petroleum products,[1] and (2) prove that they were injured as a result of the alleged violations.

In proving injury, we will adopt a presumption that the crude oil overcharges were absorbed, rather than passed on, by applicants (1) who were end-users or ultimate consumers of petroleum products, (2) whose activities were unrelated to the petroleum industry, and (3) who were not subject to the Mandatory Petroleum Price and Allocation Regulations. Applicants who meet these three criteria, therefore, are presumed to have been injured by any actual or alleged crude oil overcharges. Thus, in order to receive a refund, end-user or ultimate consumer claimants who meet the standard for this presumption need not submit any evidence of injury beyond the volume of petroleum products purchased during the period of price controls, although confirming documentation may be required in some cases. *See, e.g., Shell Oil Co.*, 17 DOE at 88,406; *A. Tarricone, Inc.*, 15 DOE ¶ 85,495 at 88,893–96 (1987). The end-user presumption of injury, however, can be rebutted by evidence which establishes that the specific end-user or ultimate consumer in question was not injured by the crude oil overcharges. *See, e.g., Berry Holding Co.*, 16 DOE ¶ 85,405 at 88,797 (1987). If an interested party submits evidence that is sufficient to cast serious doubt on the end-user presumption, the applicant will be required to produce further evidence of injury. *See, e.g., New York Petroleum*, 18 DOE at 88,701–03. Petroleum retailer, reseller, and refiner applicants, however, must submit detailed evidence of injury, and they may not rely upon the injury presumptions utilized in some refined petroleum product refund cases. *Id.* These applicants may, however, use econometric evidence of the type found in *Office of Hearings and Appeals, U.S. Dep't of Energy, Report to the United District Court for the District of Kansas, In re Department of Energy Stripper Well Exemption Litig.*, M.D.L. No. 378 (June 1985), *reprinted in*, 6 Fed. Energy Guidelines (CCH) ¶ 90,507 (1985). *See also* PODRA § 3003(b)(2), 100 Stat. at 1883 (codified at 15 U.S.C. § 4502(b)(2)). Further, if any claimant has executed and submitted a valid waiver pursuant to one of the escrows established by the M.D.L. No. 378 Final Settlement Agreement, it has waived its rights to file an application for Subpart V crude oil monies. *See Mid-American Dairymen* v. *Harrington*, 878 F.2d 1448, 1455–57 (Temp. Em. Ct. App. 1989); *In re Department of Energy Stripper Well Exemption Litig.*, 707 F. Supp. 1267, 1268–69 (D. Kan. 1987); *Boise Cascade Corp.*, 18 DOE ¶ 85,970 at 89,591–92 (1989).

As has been stated in prior Decisions, a crude oil refund claimant will be required to submit only one application for its share of

[1] Generally, a covered petroleum product is any petroleum product that was covered by the Emergency Petroleum Allocation Act of 1973, P.L. No. 93–159, 87 Stat. 627 (1973) (codified as amended at 15 U.S.C. §§ 751–760h) (EPAA), regulations promulgated pursuant to that Act, or any petroleum product which was purchased from a crude oil refinery or which, although purchased from a reseller, came from a refinery and was not substantially transformed by the reseller. *See Notice of General Interest Concerning DOE's Crude Oil Overcharge Refund Program*, 57 FR 30,731, 30,731 (July 10, 1992); Great Lakes Carbon Corp., 22 DOE ¶ 85,248 at 88,682 (1993). *See also* Anchor Continental, Inc., 22 DOE ¶ 85,003 at 88,007 (1992) (a covered product is one that was covered by the EPAA or one that was "primarily refined from crude oil at a crude oil refinery.").

all available crude oil overcharge funds. *See, e.g., Allerkamp*, 17 DOE at 88,176; *A. Tarricone, Inc.*, 15 DOE at 88,898. A party that has already submitted a claim in any other crude oil refund proceeding implemented by the DOE need not file another claim. The prior application will be deemed to be filed in all crude oil refund proceedings to date as those proceedings are finalized. The DOE has established June 30, 1994 as the current deadline for filing an Application for Refund from the crude oil funds. *See* Final Filing Deadline In Special Refund Proceeding Involving Crude Oil Overcharge Refunds, 58 Fed. Reg. 26,318, 26,319 (May 3, 1993); *Anchor Gasoline Corp.*, 22 DOE ¶ 85,071 at 88,215 (1992). It is the policy of the DOE to pay all crude oil refund claims at the rate of $0.0008 per gallon. However, while we anticipate that applicants who filed their claims before June 30, 1988 will receive a supplemental refund payment, we will decide in the future whether claimants who filed later applications should receive additional funds. *Id.; Seneca Oil*, 21 DOE at 88,972. Notice of any additional amounts available in the future will be published in the **Federal Register**.

B. Crude Oil Application Requirements

To apply for a crude oil refund, a claimant should submit an Application for Refund containing all of the following information:

(1) Identifying information including the claimant's name, current business address, business address during the refund period, taxpayer identification number, a statement indicating whether the claimant is a corporation, partnership, sole proprietorship, or other business entity, the name, title, and telephone number of a person to contact for any additional information, and the name and address of the person who should receive any refund check.[2] If the Applicant operated under more than one name or under a different name during the price control period, the applicant should specify these names;

(2) If the applicant's firm is owned by another company, or owns other companies, a list of those companies' names, addresses and descriptions of their relationship to the applicant's firm;

(3) A brief description of the claimant's business and the manner in which it used the petroleum products listed on its application;

(4) A statement identifying the petroleum products which the applicant purchased during the period August 19, 1973 through January 27, 1981, an annual schedule displaying the number of gallons of each petroleum product purchased during this refund period, and the total number of gallons of all petroleum products claimed on the refund application;

(5) An explanation as to how the applicant obtained the above-mentioned purchase volumes, and, if estimates were used, a description of its method of estimation;

(6) A statement that neither the claimant, its parent firm, affiliates, subsidiaries, successors, nor assigns has waived any right it may have to receive a crude oil refund (*e.g.*, by having executed and submitted a valid waiver accompanying a claim to any of the escrow accounts established pursuant to the M.D.L. No. 378 Final Settlement Agreement);

(7) A statement that the applicant has not filed any other refund application in the Crude Oil Subpart V Special Refund Proceeding;

(8) If the applicant is not an end-user, was covered by the DOE price regulations, or is or was related to the petroleum industry, a showing that the applicant was injured by the alleged crude oil overcharges;

(9) If the applicant is a regulated utility or a cooperative, certifications that it will pass on the entirety of any refund received to its customers, will notify its state utility commission, other regulatory agency, or membership body of the receipt of any refund, and a brief description as to how the refund will be passed along;

(10) The statement listed below signed by the individual applicant or a responsible official of the company, partnership, or other entity filing the refund application:

I swear (or affirm) that the information contained in this application and its attachments is true and correct to the best of my knowledge and belief. I understand that anyone who is convicted of providing false information to the federal government may be subject to a fine, a jail sentence, or both, pursuant to 18 U.S.C. 1001. I understand that the information contained in this application is subject to public disclosure. I have enclosed a duplicate of this entire application which will be placed in the OHA Public Reference Room.

All applications should be either typed or printed and clearly labeled "Application for Crude Oil Refund." Each applicant must submit an original and one copy of the application. If the applicant believes that any of the information in its application is confidential and does not wish for this information to be publicly disclosed, it must submit an original application, clearly designated "confidential," containing the confidential information, and two copies of the application with the confidential information deleted. All refund applications should be sent to: Subpart V Crude Oil Overcharge Refunds, Office of Hearings and Appeals, Department of Energy, 1000 Independence Avenue, SW., Washington, DC 20585.

The filing deadline is June 30, 1994. Even though an applicant is not required to use any specific form for its crude oil refund application, a suggested form has been prepared by OHA and may be obtained by sending a written request to the address listed above.

C. Payments to the Federal Government and the States

Under the terms of the M.D.L. No. 378 Final Settlement Agreement, the MSRP, and as we noted in the PD&O, the remaining eighty percent of the alleged crude oil overcharge amounts subject to this Decision and Order, plus accrued interest, will be disbursed in equal portions to the Federal Government and the States for indirect restitution. Refunds to the States will be in proportion to the consumption of petroleum products in each State during the period of price controls. The portion or ratio of the funds which each State will receive is contained in "Calculation of Ratios For Distribution to States and Territories—M.D.L. 378," Settlement Exhibit H, M.D.L. No. 378 Final Settlement Agreement at 163, *reprinted in*, 6 Fed. Energy Guidelines (CCH) at 90,687. Accordingly, we will direct the DOE Office of the Controller to transfer a total of $2,019,297.18 from the subaccounts for the three firms considered in this Decision and Order to the subaccount for disbursement to the Federal Government and the same amount from the same subaccounts to the subaccount for disbursement to the States. When disbursed, these funds will be subject to the same limitations and reporting requirements as all other crude oil monies received by the States under the M.D.L. No. 378 Final Settlement Agreement.

It Is Therefore Ordered That:

(1) Applications for Refund from the alleged crude oil overcharge funds remitted to the Department of Energy by Kaiser International Corporation may now be filed.

(2) Applications for Refund from the alleged crude oil overcharge funds remitted to the Department of Energy by Century Resources Development, Inc. may now be filed.

(3) Applications for Refund from the alleged crude oil overcharge funds remitted to the Department of Energy by Entex Petroleum, Inc. may now be filed.

(4) All crude oil refund applications submitted pursuant to Paragraphs (1) through (3) of this Decision and Order must be postmarked no later than June 30, 1994.

(5) The Director of Special Accounts and Payroll, Office of Departmental Accounting and Financial Systems Development, Office of the Controller, Department of Energy shall take all steps necessary to transfer a total of $5,048,242.96 plus accrued interest from the subaccounts denominated "Kaiser International Corp." (Consent Order No. 6C0X00280Z in the amount of $1,950,000.00 plus accrued interest), "Century Resources Development" (Consent Order No. 6C0X00287Z in the amount of $1,663,582.31 plus accrued interest), and "Entex Petroleum Incorporation" (Consent Order No. 660C00404Z in the amount of 1,434,660.65 plus accrued interest) pursuant to Paragraphs (6), (7) and (8) of this Decision and Order.

(6) The Director of Special Accounts and Payroll, Office of Departmental Accounting and Financial Systems Development, Office of the Controller, Department of Energy, shall transfer a total of $2,019,297.18 plus accrued

[2] Under the Privacy Act of 1974, Pub. L. No. 93-579, § 7, 88 Stat. 1896, 1909 (1974) (codified at 5 U.S.C. 552a note), the submission of a social security number by an individual applicant is voluntary. An applicant that does not wish to submit a social security number must submit an employer identification number if one exists. This information will be used in processing refund applications, and is requested pursuant to our authority under the PODRA and the Subpart V regulations. The information may be shared with other Federal agencies for statistical, auditing, or archiving purposes, and with law enforcement agencies when they are investigating a potential violation of civil or criminal law. Unless an applicant claims confidentiality, this information will be available to the public in the Public Reference Room of the Office of Hearings and Appeals.

interest from the subaccounts denominated "Kaiser International Corp." (Consent Order No. 6C0X00280Z in the amount of $780,000.00 plus accrued interest), "Century Resources Development" (Consent Order No. 6C0X00287Z in the amount of $665,432.92 plus accrued interest), and "Entex Petroleum Incorporation" (Consent Order No. 660C00404Z in the amount of $573,864.26 plus accrued interest) into the subaccount denominated "Crude Tracking-Federal," Account No. 999DOE002W.

(7) The Director of Special Accounts and Payroll, Office of Departmental Accounting and Financial Systems Development, Office of the Controller, Department of Energy, shall transfer a total of $2,019,297.18 plus accrued interest from the subaccounts denominated "Kaiser International Corp." (Consent Order No. 6C0X00280Z in the amount of $780,000.00 plus accrued interest), "Century Resources Development" (Consent Order No. 6C0X00287Z in the amount of $665,432.92 plus accrued interest), and "Entex Petroleum Incorporation" (Consent Order No. 660C00404Z in the amount of $573,864.26 plus accrued interest) into the subaccount denominated "Crude Tracking-States," Account No. 999DOE003W.

(8) The Director of Special Accounts and Payroll, Office of Departmental Accounting and Financial Systems Development, Office of the Controller, Department of Energy, shall transfer a total of $1,009,648.60 plus accrued interest from the subaccounts denominated "Kaiser International Corp." (Consent Order No. 6C0X00280Z in the amount of $390,000.00 plus accrued interest), "Century Resources Development" (Consent Order No. 6C0X00287Z in the amount of $332,716.47 plus accrued interest), and "Entex Petroleum Incorporation" (Consent Order No. 660C00404Z in the amount of $286,932.13 plus accrued interest) into the subaccount denominated "Crude Tracking-Claimants 4," Account No. 999DOE010Z.

Dated: August 26, 1993.

George B. Breznay,

Director, Office of Hearings and Appeals.

[FR Doc. 93-21293 Filed 8-31-93; 8:45 am]

BILLING CODE 6450-01-P

Implementation of Special Refund Procedures

AGENCY: Office of Hearings and Appeals, Department of Energy.

ACTION: Notice of implementation of special refund procedures.

SUMMARY: The Office of Hearings and Appeals (OHA) of the Department of Energy (DOE) announces the procedures for disbursement of $31,199.66 plus accrued interest, of crude oil overcharge funds obtained by the DOE from Lunday-Thagard Oil Company, Special Refund Proceeding No. LEF-0050 and William T. Tootle, president of Lotus Petroleum, Inc., Special Refund Proceeding No. LEF-0051. The OHA has determined that the funds will be distributed in accordance with the DOE's Modified Statement of Restitutionary Policy Concerning Crude Oil Overcharges. 51 FR 27899 (August 4, 1986).

DATES AND ADDRESSES: Applications for Refund from the crude oil fund must be filed in duplicate and must be postmarked no later than June 30, 1994. All applications should be clearly labelled "Application for Crude Oil Refund" and should be addressed to: Subpart V Crude Oil Overcharge Refunds, Office of Hearings and Appeals, Department of Energy, 1000 Independence Avenue, SW., Washington, DC 20585. Parties that have previously submitted a refund application in a crude oil refund proceeding need not file another application; their initial application will be deemed to be filed in all crude oil proceedings finalized to date.

FOR FURTHER INFORMATION CONTACT: Richard W. Dugan, Associate Director, Office of Hearings and Appeals, Department of Energy, 1000 Independence Avenue, SW., Washington, DC 20585, (202) 586-2860.

SUPPLEMENTARY INFORMATION: In accordance with the procedural regulations of the Department of Energy (DOE), 10 CFR 205.282(c), notice is hereby given of the issuance of the Decision and Order set out below. The Decision concerns the distribution of funds received by the DOE pursuant to the settlement of various allegations regarding crude oil overcharges and non-compliance with the Federal Petroleum Price and Allocation Regulations raised against Lunday-Thagard Oil Company (Lunday-Thagard) and William T. Tootle (Tootle), president of Lotus Petroleum, Inc. A Proposed Decision and Order tentatively establishing refund procedures and soliciting comments from the public concerning the distribution of the settlement funds obtained from these parties by the DOE was issued on February 17, 1993. 58 FR 11052 (February 23, 1993).

The Decision establishes procedures and standards which the DOE will use to distribute $31,199.66 remitted by Lunday-Thagard and Tootle. The funds shall be distributed in accord with the Modified Statement of Restitutionary Policy Concerning Crude Oil Overcharges, which states that crude oil overcharge monies will be divided among the states, the federal government, and eligible purchasers of refined petroleum products. See 51 FR 27899 (August 4, 1986). Under the Modified Policy, refunds to the states will be in proportion to each state's consumption of petroleum products during the period of price controls. Refunds to eligible purchasers will be based on the number of gallons of petroleum products that they purchased and the extent to which they can demonstrate injury.

Applications for Refund will now be accepted provided they are filed in duplicate and postmarked no later than June 30, 1994.

Parties that have previously submitted a refund application in the Subpart V crude oil proceeding need not file another application; their initial submission will be deemed to be filed in all crude oil refund proceedings finalized to date.

Dated: August 26, 1993.

George B. Breznay,

Director, Office of Hearings and Appeals.

Decision and Order of the Department of Energy

Names of Firms: Lunday-Thagard Oil Company, Lotus Petroleum, Inc. and William T. Tootle.

Date of Filing: September 17, 1992.

Case Numbers: LEF-0050, LEF-0051.

Under the procedural regulations of the Department of Energy (DOE), the Economic Regulatory Administration (ERA) may request that the Office of Hearings and Appeals (OHA) formulate and implement special refund procedures. 10 CFR 205.281. These procedures are used to refund monies to those injured by actual or alleged violations of the DOE price and allocation regulations.

In this Decision and Order, we consider two Petitions for Implementation of Special Refund Procedures filed by the ERA on September 17, 1992, for funds obtained due to alleged crude oil pricing violations. The funds at issue in the Petitions were obtained from Thagard Oil Company d/b/a Lunday-Thagard Oil Company (Lunday-Thagard) and William T. Tootle (Tootle), president of Lotus Petroleum, Inc. (Lotus).

I. Background

On August 17, 1982, the DOE filed a general unsecured claim with the United States Bankruptcy Court for the Central District of California in the Chapter 11 reorganization of Lunday-Thagard. An amended proof of claim was filed on September 2, 1982 by the DOE. During the period of crude oil price controls, Lunday-Thagard was a small and independent refiner. The DOE audited the company's compliance during this period with the Mandatory Petroleum Pricing and Allocation Regulations (the regulations) and issued a Proposed Remedial Order (PRO) to the firm requiring refunds for alleged violations of the Entitlements Program. This PRO arose from the firm's alleged improper reporting of its crude oil runs to stills for purposes of the DOE's Entitlements Program in violation of the regulations codified at 10 CFR part 211. Under the regulations, entitlements violations had the same effect as crude oil overcharges. Thereafter, the firm filed a

petition for relief with the above-mentioned Bankruptcy Court. The Bankruptcy Court approved the DOE's amended proof of claim. The Bankruptcy Estate has remitted a total of $28,156.66 in settlement of the DOE's claim against Lunday-Thagard. The Lunday-Thagard Petition requests that the OHA implement a special refund proceeding to distribute these funds, plus accrued interest.

The Lotus Petition requests that OHA implement special refund procedures for monies remitted by Tootle in relation to a Final Remedial Order issued by the OHA on April 23, 1986. Lotus Petroleum, Inc., 14 DOE ¶ 83,020 (1986). Under that Remedial Order, Lotus, Tootle and Lynn O. Castle (Castle) were found to have violated provisions of the Federal petroleum price regulations with respect to the resale of crude oil during the period April 1, 1980 through December 31, 1980 (the audit period).[1] However, on July 24, 1989, Tootle entered into a Consent Order (the Order) with DOE to resolve all of his personal liability in this matter. Consent Order No. 6A0X00330. Under this agreement the DOE compromised its enforcement claim against Tootle on an ability-to-pay basis, and accepted a total amount of $3,043 from Tootle in settlement of its claims against him. In the Lotus Petition, the ERA states that this payment was made solely by Tootle and in no way compromises the DOE's claims against Lotus or Castle.

Lunday-Thagard and Tootle have remitted a total of $31,199.66 to the DOE. These funds are available for distribution through Subpart V and currently are being held in interest-bearing escrow accounts maintained at the Department of Treasury pending a determination regarding their proper distribution.

II. Jurisdiction and Authority

On July 28, 1986, the DOE issued a Modified Statement of Restitutionary Policy Concerning Crude Oil Overcharges, 51 FR 27899 (August 4, 1986) (the MSRP). The MSRP, issued as a result of a court-approved Settlement Agreement (the Stripper Well Agreement) in *In re: The Department of Energy Stripper Well Exemption Litigation*, M.D.L. No. 378 (D.Kan. 1986), provides that crude oil overcharge funds will be divided among the states, the federal government, and injured purchasers of refined petroleum products. Under the MSRP, up to twenty percent of these crude oil overcharge funds will be reserved to satisfy valid claims by injured purchasers of petroleum products. Eighty percent of the funds, and any monies remaining after all valid claims are paid, are to be disbursed equally to the states and federal government for indirect restitution.

Shortly after the issuance of the MSRP, the OHA issued an Order that announced its intention to apply the Modified Policy in all subpart V proceedings involving alleged crude oil violations. Order Implementing the MSRP, 51 FR 29689 (August 20, 1986). In that Order, the OHA solicited comments concerning the appropriate procedures to follow in processing refund applications in crude oil refund proceedings. On April 6, 1987, the OHA issued a Notice analyzing the numerous comments and setting forth generalized procedures to assist claimants that file refund applications for crude oil monies under the Subpart V regulations. 52 FR 11737 (April 10, 1987) (the April Notice).

The OHA has applied these procedures in numerous cases since the April Notice, e.g., New York Petroleum, Inc., 18 DOE ¶ 85,435 (1988) (NYP); Shell Oil Co., 17 DOE ¶ 85,204 (1988); Ernest A. Allerkamp, 17 DOE ¶ 85,079 (1988), and the procedures have been approved by the United States District Court for the District of Kansas as well as the Temporary Emergency Court of Appeals. Various states filed a Motion with the Kansas District Court, claiming that the OHA violated the Stripper Well Agreement by employing presumptions of injury for end-users and by improperly calculating the refund amount to be used in those proceedings. On August 17, 1987, Judge Frank G. Theis issued an Opinion and Order denying the States' Motion in its entirety. In re: The Department of Energy Stripper Well Exemption Litigation, 671 F. Supp. 1318 (D. Kan. 1987), aff'd, 857 F. 2d 1481 (Temp. Emer. Ct. App. 1988). The court concluded that the Stripper Well Agreement "does not bar [the] OHA from permitting claimants to employ reasonable presumptions in affirmatively demonstrating injury entitling them to a refund." Id. at 1323. The court also ruled that, as specified in the April Notice, the OHA could calculate refunds based on a portion of the M.D.L. 378 overcharges. Id. at 1323–24.

III. The Proposed Decision and Order

On February 17, 1993, the OHA issued a Proposed Decision and Order (PDO) establishing tentative procedures to distribute the alleged crude oil violation monies obtained from Lunday-Thagard and Tootle. 58 FR 11052 (February 23, 1993). The OHA tentatively concluded that the funds should be distributed in accordance with the MSRP and the April Notice. Pursuant to the MSRP, the OHA proposed to reserve initially twenty percent of the crude oil violation funds for direct restitution to applicants who claim that they were injured by the alleged crude oil violations. The remaining eighty percent of the funds would be distributed to the states and federal government for indirect restitution. After all valid claims have been paid, any remaining funds in the claim reserve would also be divided between the states and federal government. The federal government's share ultimately would be deposited into the general fund of the Treasury of the United States.

In the PDO, the OHA proposed to require applicants for refund to document their purchase volumes of petroleum products during the period of price controls and to prove that they were injured by the alleged crude oil overcharges. The PDO stated that end-users of petroleum products whose businesses are unrelated to the petroleum industry are presumed to have absorbed the crude oil overcharges, and need not submit any further proof of injury to receive a refund. The OHA also proposed to calculate refunds on the basis of a volumetric refund amount, as described in the April Notice. The PDO provided a period of 30 days from the date of publication in the **Federal Register** in which comments could be filed regarding the tentative distribution process. More than 30 days have elapsed and the OHA has received no comments concerning the proposed procedures for the distribution of the Lunday-Thagard and Tootle settlement funds. Consequently, the procedures will be adopted as proposed.

IV. The Refund Procedures

A. Refund Claims

The OHA has concluded that the $31,199.66, plus interest that has accrued on that amount, should be distributed in accordance with the crude oil refund procedures discussed above. We have decided to reserve the full twenty percent of the alleged crude oil violation amount, or $6,239.94, plus interest, for direct refunds to claimants, in order to insure that sufficient funds will be available for refunds to injured parties.

The process which the OHA will use to evaluate claims based on alleged crude oil violations will be modeled after the process the OHA has used in Subpart V proceedings to evaluate claims based upon alleged overcharges involving refined products. E.g., Mountain Fuel Supply Co., 14 DOE ¶ 85,475 (1986) (Mountain Fuel). As in non-crude oil cases, applicants will be required to document their purchase volumes of covered products and prove that they were injured as a result of the alleged violations. We presume that an applicant incurred a crude oil overcharge in the purchase of a petroleum product during the period August 19, 1973 through January 27, 1981, if either that product was defined as a "covered product" in regulations promulgated pursuant to the Emergency Petroleum Allocation Act of 1973, 15 U.S.C. 751–760, or (a) was purchased from a crude oil refinery or (b) originated in a crude oil refinery and was purchased from a reseller who did not substantially change its form. See Great Lakes Carbon Corp., 22 DOE ¶ 85,248 at 88,662 (1993) (citing 57 FR 30731, 30732 (July 10, 1992)). Applicants who were end-users or ultimate consumers of petroleum products, whose businesses are unrelated to the petroleum industry, and who were not subject to the DOE price regulations are presumed to have been injured by any alleged crude oil overcharges. In order to receive a refund, end-users need not submit any further evidence of injury beyond the volume of petroleum products purchased during the period of price controls. E.g., A. Tarricone, Inc., 15 DOE ¶ 85,495 at 88,893–96 (1987) (A. Tarricone). However, the end-user presumption of injury can be rebutted by evidence which establishes that the

[1] Lotus was incorporated in the State of Texas on April 17, 1980. Tootle and Castle were its only shareholders. On May 3, 1984, the ERA issued a PRO alleging that during the audit period, Lotus engaged in the resale of crude oil through the process known as "layering" (Case No. 6A0X00330). The PRO alleged that Lotus charged prices for crude oil in excess of the actual cost of the crude oil without providing any service or function traditionally and historically associated with the resale of crude oil. After considering the objections filed by the PRO recipients, this Office issued the PRO as a Final Remedial Order on April 23, 1986. The Remedial Order found Lotus, Tootle and Castle jointly liable for $11,833,152 in overcharges plus interest.

specific end-user in question was not injured by the crude oil overcharges. E.g. Berry Holding Co., 16 DOE ¶ 85,405 at 88,797 (1987). If an interested party submits evidence that is sufficient to cast serious doubt on the end-user presumption, the applicant will be required to produce further evidence of injury. E.g., NYP, 18 DOE at 88,701–03.

Reseller and retailer claimants must submit detailed evidence of injury and may not rely on the presumption of injury utilized in refund cases involving refined petroleum products. They can, however, use econometric evidence of the type employed in the OHA Report to the District Court in the Stripper Well Litigation, reprinted in 6 Fed. Energy Guidelines ¶ 90,507. Applicants who executed and submitted a valid waiver pursuant to one of the escrows established in the Stripper Well Agreement have waived their rights to apply for crude oil refunds under Subpart V. *Mid-America Dairyman Inc.*, v. *Herrington*, 878 F. 2d 1448 (Temp. Emer. Ct. App. 1989); *accord, Boise Cascade Corp.*, 18 DOE ¶ 85,970 (1989).

Refunds to eligible claimants that purchased refined petroleum products will be calculated on the basis of a volumetric amount obtained by dividing the crude oil refund monies involved in this determination ($31,199.66) by the total U.S. consumption of petroleum products during the price control period. See Mountain Fuel.

As has been stated in prior Decisions, a crude oil refund applicant will only be required to submit one application for its share of all available crude oil overcharge funds. See e.g., A. Tarricone. A party that has already submitted a claim in any other crude oil refund proceeding implemented by the DOE need not file another claim. The prior application will be deemed to be filed in all crude oil refund proceedings finalized to date. The final deadline for filing an Application for Refund is June 30, 1994. See Anchor Gasoline Corp., 22 DOE ¶ 85,071 (1992); see also 58 FR 26318 (May 3, 1993). It is the policy of the DOE to pay all crude oil refund claims filed before June 30, 1994, at the rate of $0.0008 per gallon. We anticipate that applicants who filed their claims by June 30, 1988, will received a supplemental refund payment; however, we will decide in the future whether claimants that filed later application should receive additional refunds. Applicants may be required to submit additional information to support their refund claims for future amounts. Notice of any such additional amounts will be published in the **Federal Register.**

B. Crude Oil Application Requirements

To apply for a crude oil refund, a claimant should submit an Application for Refund containing all of the following information:

(1) Identifying information including the claimant's name, current business address, business address during the refund period, taxpayer identification number, a statement indicating whether the claimant is a corporation, partnership, sole proprietorship, or other business entity, the name, title, and telephone number of a person to contact for any additional information, and the name and address of the person who should receive any refund check.[2] If the applicant operated under more than one name or under a different name during the price control period, the applicant should specify these names;

(2) If the applicant's firm is owned by another company, or owns other companies, a list of those companies' names, address, and descriptions of their relationship to the applicant's firm;

(3) A brief description of the claimant's business and the manner in which it used the petroleum products listed on its application;

(4) A statement identifying the petroleum products which the applicant purchased during the period August 19, 1973 through January 27, 1981, an annual schedule displaying the number of gallons of each petroleum product purchased during this refund period, and the total number of gallons of all petroleum products claimed on the refund application;

(5) An explanation as to how the applicant obtained the above mentioned purchase volume figures, and, if estimates were used, a description of its method of estimation;

(6) A statement that neither the claimant, its parent firm, affiliates, subsidiaries, successors, nor assigns has waived any right it may have to receive a crude oil refund (e.g., by having executed and submitted a valid waiver accompanying a claim to any of the escrow accounts established pursuant to the Stripper Well Settlement Agreement);

(7) A statement that the applicant has not filed any other refund application in the subpart V crude oil refund proceeding;

(8) If the applicant is not an end-user, was covered by the DOE price regulations, or is related to the petroleum industry, a showing that the applicant was injured by the alleged crude oil overcharges;

(9) If the applicant is a regulated utility or a cooperative, a certification that it will pass on the entirety of any refund received to its customers, will notify its state utility commission, other regulatory agency, or membership body of the receipt of any refund, and a brief description as to how the refund will be passed along;

(10) The statement listed below signed by the individual applicant or a responsible official of the company filing the refund application:

I swear (or affirm) that the information contained in this application and its attachments is true and correct to the best of my knowledge and belief. I understand that anyone who is convicted of providing false information to the federal government may be subject to a fine, a jail sentence, or both, pursuant to 18 U.S.C. 1001. I understand that the information contained in this application is subject to public disclosure. I have enclosed a duplicate of this entire application which will be placed in the OHA Public Reference Room.

All applications should be either typed or printed and clearly labeled "Application for Crude Oil Refund." Each applicant must submit an original and one copy of the application. If the applicant believes that any of the information in its application is confidential and does not wish for this information to be publicly disclosed, it must submit an original application, clearly designated "confidential," containing the confidential information, two copies of the application with the confidential information deleted, and an explanation of why that information is confidential. All refund applications should be sent to: Subpart V Crude Oil Overcharge Refunds, Office of Hearings and Appeals, Department of Energy, 1000 Independence Avenue, SW., Washington, DC 20585.

The filing deadline is June 30, 1994. Even though an applicant is not required to use any specific form for its crude oil refund application, a suggested form has been prepared by the OHA and may be obtained by sending a written request to the address listed above.

C. Payments to the Federal Government and the States

Under the terms of the MSRP, the remaining eighty percent of the alleged crude oil violation amounts subject to this Decision, or $24,959.72, plus interest, should be disbursed in equal shares to the states and federal government, for indirect restitution. Accordingly, we will direct the DOE's Office of the Controller to segregate the $24,959.72, plus interest, available for disbursement to the states and federal government and transfer one-half of that amount, or $12,479.86, plus interest, into an interest-bearing subaccount for the states, and one-half, or $12,479.86, plus interest, to an interest bearing subaccount for the federal government. The share or ratio of the funds which each state will receive is contained in Exhibit H of the Stripper Well Agreement. When disbursed, these funds will be subject to the same limitations and reporting requirements as all other crude oil monies received by the states under the Stripper Well Agreement.

It Is Therefore Ordered That:

(1) Applications for Refund from the alleged crude oil overcharge funds remitted to the Department of Energy by Lunday-Thagard Oil Company pursuant to the DOE's amended proof of claim may now be filed.

(2) Applications for Refund from the alleged crude oil overcharge funds remitted to the Department of Energy by William T. Tootle pursuant to the consent order executed on July 24, 1989, may now be filed.

(3) The Director of Special Accounts and Payroll, Office of Departmental Accounting and Financial Systems Development, Office of the Controller, Department of Energy, shall

[2] Under the Privacy Act of 1974, the submission of a social security number by an individual applicant is voluntary. An applicant that does not wish to submit a social security number must submit an employer identification number if one exists. This information will be used in processing refund applications, and is requested pursuant to our authority under the Petroleum Overcharge Distribution and Restitution Act of 1986 and the regulations codified at 10 CFR part 205, subpart V. The information may be shared with other Federal agencies for statistical, auditing or archiving purposes, and with law enforcement agencies when they are investigating a potential violation of civil or criminal law. Unless an applicant claims confidentiality, this information will be available to the public in the Public Reference Room of the Office of Hearings and Appeals.

take all steps necessary to transfer $28,156.66 (plus interest) from the Lunday-Thagard Oil Company subaccount (Account Number N00S98094Z) and $3,043 (plus interest) from the Lotus Petroleum, Inc. subaccount (Account Number 6A0X00330Z), pursuant to Paragraphs (4), (5), and (6) of this Decision.

(4) The Director of Special Accounts and Payroll shall transfer $12,479.86 (plus interest) of the funds obtained pursuant to paragraph (3) above, into subaccount denominated "Crude Tracking-States." Number 999DOE003W.

(5) The Director of Special Accounts and Payroll shall transfer $12,479.86 (plus interest) of the funds obtained pursuant to paragraph (3) above, into the subaccount denominated "Crude Tracking-Federal," Number 999DOE002W.

(6) The Director of Special Accounts and Payroll shall transfer $6,239.94 (plus interest) of the funds obtained pursuant to paragraph (3) above, into the subaccount denominated "Crude Tracking-Claimants 4," Number 999DOE010Z.

(7) All Applications submitted pursuant to paragraphs (1) and (2) above must be filed in duplicate and postmarked no later than June 30, 1994.

Dated: August 26, 1993.

George B. Breznay,

Director, Office of Hearings and Appeals.

[FR Doc. 93–21292 Filed 8–31–93; 8:45 am]

BILLING CODE 6450–01–P

ENVIRONMENTAL PROTECTION AGENCY

[FRL–4702–8]

Agency Information Collection Activities Under OMB Review

AGENCY: Environmental Protection Agency (EPA).

ACTION: Notice.

SUMMARY: In compliance with the Paperwork Reduction Act (44 U.S.C. 3501 *et seq.*), this notice announces that the Information Collection Request (ICR) abstracted below has been forwarded to the Office of Management and Budget (OMB) for review and comment. The ICR describes the nature of the information collection and its expected cost and burden.

DATES: Comments must be submitted on or before October 1, 1993.

FOR FURTHER INFORMATION CONTACT: Sandy Farmer at EPA, (202) 260–2740.

SUPPLEMENTARY INFORMATION:

Office of Water

Title: National Pollutant Discharge Elimination System (NPDES)/ Pretreatment/State Sludge Management Program Regulatory Revisions (EPA ICR No. 0002.07; OMB Control No. 2040–0009).

Abstract: This ICR is an extension of an existing information collection as part of the National Pollutant Discharge Elimination System (NPDES) Pretreatment Program and combines the information collection activities previously cleared under the Final Rule To Implement the Domestic Sewage Study (DSS) ICR (OMB Control No. 2040–0150). The NPDES Pretreatment Program and DSS requirements are established under the Clean Water Act, as amended, and have been promulgated at 40 CFR part 403. The Clean Water Act requires EPA to develop national pretreatment standards to control discharges from Industrial Users (IUs) into sewage systems, or Publicly Owned Treatment Works (POTWs). The information gathered by these requirements is used by the EPA, or the delegated State or Local authority, to monitor and enforce compliance with the regulations, as well as to authorize program administration at the State or local (POTW) level.

Following approval of this ICR, POTWs, States and IUs must continue to perform information collection activities, in accordance with the requirements of 40 CFR part 403. The information collected from IUs includes the mass, frequency, and content of their discharges, their schedule for installing pretreatment equipment, violations affecting human health, and actual or anticipated discharges of wastes considered hazardous under the Resource Conservation and Recovery Act (RCRA). States and POTWs applying for approval of a pretreatment program must submit data concerning their legal, procedural, and administrative basis for establishing such a program. POTWs, State approval authorities, and IUs are required to maintain records related to compliance for a period of three years.

Burden Statement: Public reporting burden for this collection of information is estimated to average 8 hours per response including time for reviewing instructions, gathering and compiling the data needed, and completing and reviewing the information. Public recordkeeping is estimated to average 13.4 hours per recordkeeper including time to process, store and maintain records.

Respondents: POTWs, IUs, States submitting requests for program approval.

Estimated No. of Respondents: 19,859 reporters; 12,679 recordkeepers.

Estimated Number of Responses per Respondent: 13.

Frequency of Collection: Variable, as needed.

Estimated Total Annual Burden on Respondents: 2,323,442 hours.

Send comments regarding the burden estimate, or any other aspect of this collection of information, including suggestions for reducing the burden to:

Sandy Farmer, U.S. Environmental Protection Agency, Information Policy Branch (PM–223Y), 401 M Street, SW., Washington, DC 20460.

and

Matt Mitchell, Office of Management and Budget, Office of Information and Regulatory Affairs, 725 17th Street, NW Washington, DC 20503.

Dated: August 26, 1993.

Paul Lapsley,

Director, Regulatory Management Division.

[FR Doc. 93–21256 Filed 8–31–93; 8:45 am]

BILLING CODE 6560–50–P

[FRL–4702–7]

Prevention of Significant Deterioration of Air Quality (PSD) Final Determination—Onondaga County Resource Recovery Facility

AGENCY: Environmental Protection Agency.

ACTION: Notice of final action.

SUMMARY: The purpose of this notice is to announce that on April 15, 1992, the New York State Department of Environmental Conservation issued a final PSD permit to the Onondaga Resource Recovery Facility located in Onondaga County, New York. This determination was appealed to the EPA. EPA's Administrator denied this appeal on December 1, 1992.

This facility is a 990 ton per day municipal solid waste incineration facility. Emission controls include fabric filters, dry scrubbers and selective non-catalytic reduction. The final permit meets all applicable requirements of the PSD regulations.

FOR FURTHER INFORMATION CONTACT: Maria N. Stanco of the Permitting and Toxics Support Section, Air Compliance Branch, Division of Air and Waste Management, U.S. Environmental Protection Agency Region II Office, 26 Federal Plaza, room 505, New York, New York 10278, (212) 264–4726. Anyone who wishes to review this determination and related materials should contact the following office:

New York State Department of Environmental Conservation, Division of Air Resources, Source Review and Regional Support Section, 50 Wolf Road, Albany, New York 12233–0001.

If available pursuant to the Consolidated Permit Regulations (40 CFR part 124), judicial review of this

determination under section 307(b)(1) of the Clean Air Act (the Act) may be sought only by the filing of a petition for review in the United States Court of Appeals for the appropriate circuit within 60 days from the date on which this determination is published in the **Federal Register**. Under section 307(b)(2) of the Act, this determination shall not be subject to later judicial review in civil or criminal proceedings for enforcement.

William J. Muszynski,

Acting Regional Administrator.

[FR Doc. 93-21250 Filed 8-31-93; 8:45 am]

BILLING CODE 6560-50-P

[FRL-4725-1]

Clean Water Act; New Jersey's Request To Assume the Section 404 Program

AGENCY: Environmental Protection Agency.

ACTION: Extension of public comment period and review period.

SUMMARY: The Federal Clean Water Act (CWA) established the Section 404 Permit Program, under which the U.S. Army Corps of Engineers may issue permits for the discharge of dredged or fill material into "waters of the United States" as identified in the CWA. Section 404(g)(1) of the CWA allows any State to apply to the United States Environmental Protection Agency (EPA) to administer its own individual and general permit program for the discharge of dredged or fill material into state regulated waters within its jurisdiction. The State of New Jersey has submitted a full and complete Request for State Program Approval and proposes to operate the State permit program for regulated activities into waters within the jurisdiction of the State in accordance with the CWA. (The announcement describing the State's complete application package was published in Volume 58, No. 130, of the **Federal Register**, July 9, 1993, beginning at page 36958.) The State of New Jersey has requested to EPA Region 2 that there be an extension of both the public comment period and EPA's overall 120-day review period to allow for more public input and additional review time for EPA before it makes its decision on the State's application. EPA agrees with this request for an extension of the above timeframes.

DATES: The original Public comment period for the proposed transfer closed on August 27, 1993. EPA would have approved or disapproved the program transfer by October 13, 1993. EPA will extend the public comment period for the proposed transfer by 30 days, to September 27, 1993. Further, the 120-day review period will be extended by 60 days. Therefore, EPA will make a decision to approve or disapprove the program transfer on or before December 13, 1993.

ADDRESSES: Any interested persons may comment upon New Jersey's application by writing to Mr. Mario Del Vicario, Chief, Marine and Wetlands Protection Branch, USEPA Region 2, 26 Federal Plaza, New York, NY 10278.

FOR FURTHER INFORMATION CONTACT: Mr. Del Vicario, at the above address or at 212-264-5170.

Dated: August 27, 1993.

William J. Muszynski,

Acting Regional Administrator.

[FR Doc. 93-21395 Filed 8-31-93; 8:45 am]

BILLING CODE 6560-50-P

[FRL-4703-4]

New Source Review Reform Subcommittee

AGENCY: Environmental Protection Agency (EPA).

ACTION: Notice of public meeting.

SUMMARY: On July 7, 1993, the EPA gave notice of the establishment of the New Source Review (NSR) Reform Subcommittee (Subcommittee) (58 FR 36407) under the auspices of the Clean Air Act Advisory Committee (55 FR 46993) which was established pursuant to the Federal Advisory Committee Act (5 U.S.C. app I). The Subcommittee's purpose is to provide independent advice and counsel to the EPA on policy and technical issues associated with reforming the NSR rules.

OPEN MEETING DATE: Notice is hereby given that the Subcommittee will hold an open meeting on September 27-28, 1993, from 8 a.m. to 5 p.m., at the Sheraton University Center, 2800 Middleton Avenue, Durham, North Carolina 27705, telephone (919) 383-8575, telefax (919) 383-8495. Due to the size of the meeting room, seating is limited to approximately 100 individuals and will be made available on a first come, first serve basis.

The Subcommittee will address NSR applicability-related issues at this meeting. In addition, the NSR Reform Subcommittee will review draft options and recommendations developed by subgroups on specific areas regarding Class I area impacts and best available control technology.

INSPECTION OF COMMITTEE DOCUMENTS: Documents relating to the above noted topics will be publicly available at the meeting. Thereafter, these documents, together with the transcript and summary of the Subcommittee's meeting, will be available for public inspection in EPA Air Docket No. A-90-37. The docket is available for public inspection and copying between 8:30 a.m. to 12 noon and 1:30 to 3:30 p.m., weekdays, at EPA's Air Docket (LE-131), room M-1500, 401 M Street, SW., Washington, DC 20460. A reasonable fee may be charged for copying.

The transcript and summary will also be available to the public through EPA's Office of Air Quality Planning and Standards' (OAQPS) Technology Transfer Network (TTN) electronic bulletin board. For assistance in accessing the OAQPS TTN, contact the systems operator at (919) 541-5384 in Research Triangle Park, North Carolina during normal business hours.

FOR FURTHER INFORMATION CONTACT: For questions concerning the Subcommittee or its activities, please contact Mr. David Solomon, Designated Federal Official to the Subcommittee, at (919) 541-5375, telefax (919) 541-5509, or by mail at U.S. EPA, OAQPS, Air Quality Management Division (MD-15), Research Triangle Park, North Carolina 27711.

Dated: August 17, 1993.

James Weigold,

Acting Director, Office of Air Quality Planning and Standards.

[FR Doc. 93-21254 Filed 8-31-93; 8:45 am]

BILLING CODE 6560-50-P

[FRL-4703-2]

Technology Innovation and Economics Committee of the National Advisory Council for Environmental Policy and Technology; Public Meeting

AGENCY: Environmental Protection Agency (EPA).

ACTION: Notice of public meeting.

DATE AND TIME: Thursday, September 23, 1993, from 9 a.m. to 4 p.m.

LOCATION: National Governors' Association Hall of the States, room 333, 444 North Capitol Street, Washington, DC.

SUMMARY: Under the Federal Advisory Committee Act, Public Law 92-463, EPA gives notice of a one-day meeting of the Technology Innovation and Economics (TIE) Committee of the National Advisory Council for Environmental Policy and Technology (NACEPT). NACEPT provides advice and recommendations to the Administrator of EPA on a broad range of environmental policy issues, and the

TIE Committee identifies actions that EPA can take to speed the development, commercialization, and use of technologies that will result in environmental improvement and economic growth.

Four topics will be discussed during the meeting:

1. Actions that EPA has taken to implement past recommendations from the TIE Committee.

2. Current technology-related activities that are underway in EPA.

3. Technology activities that are underway in other parts of the Federal Government and EPA's role in these activities.

4. Issues and topics that the TIE Committee may consider over the next year.

Members of the public are encouraged to submit written comments suggesting projects for the Committee. Written comments can be submitted by mail. Any written comments received before Friday, September 17, 1993, will be distributed to Committee members for consideration. Scheduling constraints preclude oral comments from the public during the meeting.

ADDRESSES: Written comments should be sent to: Mark Joyce (A101F6), Office of Cooperative Environmental Management, U.S. EPA, 401 M Street SW., Washington, DC 20460.

FOR FURTHER INFORMATION CONTACT: Mark Joyce, Director, Environmental Information, Economics, and Technology Staff, Direct line (202) 260–6889, Secretary's line (202) 260–6892.

Dated: August 25, 1993.

Abby J. Pirnie,

Director, Office of Cooperative Environmental Management.

[FR Doc. 93–21252 Filed 8–31–93; 8:45 am]

BILLING CODE 6560–JD–M

[OPP–50769; FRL–4635–8]

Issuance of Experimental Use Permits

AGENCY: Environmental Protection Agency (EPA).

ACTION: Notice.

SUMMARY: EPA has granted experimental use permits to the following applicants. These permits are in accordance with, and subject to, the provisions of 40 CFR part 172, which defines EPA procedures with respect to the use of pesticides for experimental use purposes.

FOR FURTHER INFORMATION CONTACT: By mail: Registration Division (H7505C), Office of Pesticide Programs, Environmental Protection Agency, 401 M St., SW., Washington, DC 20460. In person or by telephone: Contact the product manager at the following address at the office location or telephone number cited in each experimental use permit: 1921 Jefferson Davis Highway, Arlington, VA.

SUPPLEMENTARY INFORMATION: EPA has issued the following experimental use permits:

241–EUP–123. Extension. American Cyanamid Company, Agricultural Research Division, P.O. Box 400, Princeton, NJ 08543-0400. This experimental use permit allows the use of 280 pounds of the plant growth modifier 1-(3-chlorophthalimido)-cyclohexanecarboxamide on hybrid roses and ornamental crops to evaluate stem production. The program is authorized only in the States of Alabama, Arkansas, California, Colorado, Connecticut, Florida, Georgia, Hawaii, Illinois, Indiana, Iowa, Maryland, Massachusetts, Michigan, Minnesota, Missouri, New Jersey, New York, North Carolina, Ohio, Oregon, Pennsylvania, Tennessee, Texas, Utah, Virginia, Washington, and Wisconsin. The experimental permit is authorized from June 17, 1993 to May 31, 1995. (Cynthia Giles-Parker, PM 22, Rm. 229, CM #2, (703–305–5540))

7969–EUP–30. Issuance. BASF Corporation, P.O. Box 13528, Research Triangle Park, NC 27709–3528. This experimental use permit allows the use of 750 pounds of the herbicide 3,7-dichloro-8-quinolinecarboxylic acid on 2,000 acres of rice to evaluate the control of certain grasses and broadleaf weeds. The program is authorized only in the States of Arkansas, Louisiana, Mississippi, and Texas. The experimental use permit is effective from April 28, 1993 to August 31, 1993. A permanent tolerance for residues of the active ingredient in or on rice has been established (40 CFR 180.463). (Robert Taylor, PM 25, Rm. 241, CM #2, (703–305–6800))

62719–EUP–1. Renewal. DowElanco, 9002 Purdue Rd., P.O. Box 681428, Indianapolis, IN 46268. This experimental use permit allows the use of 39,360 pounds of the herbicide triclopyr on 1,640 aquatic acres of drainage canals and ditches, irrigation canals and ditches, lakes, ponds, marshes, reservoirs, rivers, streams, wetlands, and the banks and shores of these sites to evaluate selective control of woody plants and certain annual or perennial weeds. The program is authorized only in the States of Alabama, California, Florida, Idaho, Indiana, Kentucky, Louisiana, Michigan, Minnesota, North Carolina, Ohio, South Carolina, Tennessee, Texas, Vermont, Washington, and Wisconsin. The experimental use permit is effective from May 28, 1993 to May 29, 1995. Temporary tolerances for residues of the active ingredient in or on fish and shellfish have been established. (Robert Taylor, PM 25, Rm. 241, CM #2, (703–305–6800))

62719–EUP–8. Renewal. DowElanco, 9002 Purdue Rd., P.O. Box 681428, Indianapolis, IN 46268. This experimental use permit allows the use of 750 pounds of the herbicide triclopyr on 2,000 acres of rice to evaluate selective postemergence broadleaf weed control. The program is authorized only in the States of Arkansas, Louisiana, Mississippi, and Texas. The experimental use permit is effective from June 23, 1993 to June 23, 1994. A temporary tolerance for residues of the active ingredient in or on rice has been established. (Robert Taylor, PM 25, Rm. 241, CM #2, (703–305–6800))

352–EUP–153. Issuance. E.I. duPont de Nemours & Company, Inc., Agricultural Products, Walkers Mill, Barley Mill Plaza, P.O. Box 80038, Wilmington, DE 19880–0038. This experimental use permit allows the use of 43.57 pounds of the herbicide N-((4,6-dimethoxypyrimidin-2-yl)aminocarbonyl)-3-(ethylsulfonyl)-2-pyridinesulfonamide on 1,400 acres of corn to evaluate the control of certain weeds. The program is authorized only in the States of California, Colorado, Illinois, Kentucky, Louisiana, Minnesota, Nebraska, North Carolina, and Pennsylvania. The experimental use permit is effective from April 7, 1993 to April 7, 1995. Temporary tolerances for residues of the active ingredient in or on corn (fodder, forage, and grain) have been established. (Robert Taylor, PM 25, Rm. 241, CM #2, (703–305–6800))

352–EUP–156. Issuance. E.I. duPont de Nemours & Company, Inc., Agricultural Products, Walkers Mill, Barley Mill Plaza, P.O. Box 80038, Wilmington, DE 19880–0038. This experimental use permit allows the use of 1,112.5 ounces of the herbicide N-((4,6-dimethoxypyrimidin-2-yl)aminocarbonyl)-3-(ethylsulfonyl)-2-pyridinesulfonamide on 2,225 acres of potatoes to evaluate the control of certain weeds. The program is authorized only in the States of California, Colorado, Connecticut, Delaware, Florida, Idaho, Maine, Maryland, Michigan, Minnesota, New Hampshire, New Jersey, New York, North Carolina, North Dakota, Oregon, Pennsylvania, Virginia, Washington, and Wisconsin. The experimental use permit is effective from April 7, 1993 to April 7, 1995. A temporary tolerance for residues of the active ingredient in or on potatoes has been established. (Robert

Taylor, PM 25, Rm. 241, CM #2, (703–305–6800))

352–EUP–157. Issuance. E.I. duPont de Nemours & Company, Inc., Agricultural Products, Walkers Mill, Barley Mill Plaza, P.O. Box 80038, Wilmington, DE 19880–0038. This experimental use permit allows the use of 1,112.5 ounces of the herbicides N-((4,6-dimethoxypyrimidin-2-yl)aminocarbonyl)-3-(ethylsulfonyl)-2-pyridinesulfonamide and 4-amino-6-(1,1-dimethylethyl)-3-(methylthio)-1,2,4-triazin-5(4H)-one on 2,225 acres of potatoes to evaluate the control of certain weeds. The program is authorized only in the States of California, Colorado, Connecticut, Delaware, Florida, Idaho, Maine, Maryland, Michigan, Minnesota, New Hampshire, New Jersey, New York, North Carolina, North Dakota, Oregon, Pennsylvania, Virginia, Washington, and Wisconsin. The experimental use permit is effective from April 7, 1993 to April 7, 1995. Temporary tolerances for residues of the active ingredients in or on potatoes has been established. (Robert Taylor, PM 25, Rm. 241, CM #2, (703–305–6800))

8340–EUP–13. Extension. Hoechst Celanese Corporation, Route 202–205, P.O. Box 2500, Somerville, NJ 08876–1258. This experimental use permit allows the use of 348 pounds of the herbicides (±)-ethyl 2-[4-[(6-chloro-2-benzoxazolyl)oxy]phenoxy]propanoate, 2-ethylhexyl-2,4-dichlorophenoxyacetate, and isooctyl 2-methyl-4-chlorophenoxyacetate on 3,720 acres of spring barley to evaluate control of annual monocotyledonous weeds. The program is authorized only in the States of Minnesota, Montana, North Dakota, and South Dakota. The experimental use permit is effective from April 10, 1993 to April 10, 1994. This permit is issued with the limitation that residues in the treated crops do not exceed established tolerances prior to entering into commercial channels of trade. If established tolerances are exceeded, the crops must be destroyed or used for research purposes only. (Joanne I. Miller, PM 23, Rm. 237, CM #2, (703–305–7830))

524–EUP–74. Issuance. Monsanto Agricultural Company, 800 North Lindbergh Blvd., St. Louis, MO 63167. This experimental use permit allows the use of 318.5 pounds (256 pounds on corn and 62.5 pounds on turf) of the herbicide methyl 5-{[(4,6-dimethoxy-2-pyrimidinyl)amino] carbonylaminosulfonyl}-3-chloro-1-methyl-1-H-pyrazole-4-carboxylate on 4,500 acres of corn (fodder, forage, and grain) and turf to evaluate the control of certain broadleaf weeds. The program is authorized in the States of Arizona, California, Colorado, Delaware, Florida, Georgia, Hawaii, Illinois, Indiana, Iowa, Kansas, Kentucky, Maryland, Michigan, Minnesota, Missouri, Nebraska, Nevada, New Jersey, New York, North Carolina, Ohio, Oklahoma, Pennsylvania, South Carolina, South Dakota, Texas, Virginia, and Wisconsin. The experimental use permit is effective from March 29, 1993 to March 29, 1994. Temporary tolerances for residues of the active ingredient in or on field corn (grain, fodder, and forage) have been established. (Joanne I. Miller, PM 23, Rm. 237, CM #2, (703–305–7830))

524–EUP–76. Issuance. Monsanto Agricultural Company, 800 North Lindbergh Blvd., St. Louis, MO 63167. This experimental use permit allows the use of 376 pounds of the herbicide methyl 5-{[(4,6-dimethoxy-2-pyrimidinyl) amino] carbonylaminosulfonyl}-3-chloro-1-methyl-1-H-pyrazole-4-carboxylate on 4,000 acres of field corn (grain, fodder, and forage) to evaluate the control of certain broadleaf weeds. The program is authorized in the States of Delaware, Illinois, Indiana, Iowa, Kansas, Kentucky, Maryland, Michigan, Minnesota, Missouri, Nebraska, North Dakota, New York, Ohio, Pennsylvania, South Dakota, Virginia, and Wisconsin. The experimental use permit is effective from March 29, 1993 to March 29, 1994. Temporary tolerances for residues of the active ingredient in or on field corn (grain, fodder, and forage) have been established. (Joanne I. Miller, PM 23, Rm. 237, CM #2, (703–305–7830))

3432–EUP–1. Issuance. N. Jonas and Company, Inc., 4520 Adams Circle, Bensalem, PA 19020. This experimental use permit allows the use of 5 pounds of the germicide silver oxide II on a maximum of 15 swimming pools to evaluate the control of bacteria. The program is authorized only in the State of Pennsylvania. The experimental use permit is effective from April 9, 1993 to April 9, 1994. (Ruth Douglas, PM 32, Rm. 278, CM #2, (703–305–7964))

264–EUP–93. Issuance. Rhone-Poulenc, P.O. Box 12014, 2 T.W. Alexander Dr., Research Triangle Park, NC 27709. This experimental use permit allows the use of 2,030 pounds of the herbicides octanoic acid ester of bromoxynil and heptanoic acid ester of bromoxynil on 1.215 acres of transgenic bromotol cotton to evaluate the control of certain broadleaf weeds. The program is authorized only in the States of Alabama, Arizona, Arkansas, Georgia, Louisiana, Missouri, Mississippi, North Carolina, South Carolina, Tennessee, and Texas. The experimental use permit is effective from June 4, 1993 to June 4, 1994. This permit is issued with the limitation that all crops are destroyed or used for research purposes only. (Robert Taylor, PM 25, Rm. 241, CM #2, (703–305–6800))

55947–EUP–14. Extension. Sandoz Agro, Inc., 1300 East Toughy Avenue, Des Plaines, IL 60018. This experimental use permit allows the use of 1,000 pounds of the fungicide alpha-(4-chlorophenyl)-alpha-(1-cyclopropylethyl)-1H-1,2,4-triazole-1-ethanol on 950 acres of golf course turf to evaluate the control of certain fungal diseases of turfgrass. The program is authorized only in the States of Connecticut, Delaware, Illinois, Indiana, Iowa, Kentucky, Maryland, Michigan, Missouri, New Jersey, North Carolina, Ohio, Pennsylvania, Rhode Island, South Carolina, and Virginia and the District of Columbia. The experimental use permit is effective from February 25, 1993 to March 1, 1994. (Susan Lewis, PM 21, Rm. 227, CM #2, (703–305–5663))

400–EUP–68. Renewal. Uniroyal Chemical Company, Inc., 74 Amity Rd., Bethany, CT 06524–3402. This experimental use permit allows the use of 240 pounds of the herbicide potassium salt of 1,2-dihydro-3,6-pyridazinedione on 160 acres of rice to evaluate the suppression of seed production. The program is authorized only in the State of Louisiana. The experimental use permit is effective from May 10, 1993 to August 31, 1994. (Cynthia Giles-Parker, PM 22, Rm. 229, CM #2, (703–305–5540))

Persons wishing to review these experimental use permits are referred to the designated product managers. Inquires concerning these permits should be directed to the persons cited above. It is suggested that interested persons call before visiting the EPA office, so that the appropriate file may be made available for inspection purposes from 8 a.m. to 4 p.m., Monday through Friday, excluding legal holidays.

Authority: 7 U.S.C. 136.

Dated: August 19, 1993.

Lawrence E. Culleen,

Acting Director, Registration Division, Office of Pesticide Programs.

[FR Doc. 93–21247 Filed 8–31–93; 8:45 am]

BILLING CODE 6560–50–F

[OPP–00362; FRL–4639–4]

Silver and Biobor; Pesticide Reregistration Eligibility Documents; Availability for Comment

AGENCY: Environmental Protection Agency (EPA).

ACTION: Notice of availability of reregistration eligibility documents; opening of public comment period.

SUMMARY: This Notice announces the availability of the Reregistration Eligibility Documents (REDs) for the active ingredients Silver and Biobor, and the start of a 60–day public comment period. The REDs for Silver and Biobor are the Agency's formal regulatory assessment of the health and environmental data base of the subject chemicals, and present the Agency's determination regarding which pesticidal uses of Silver and Biobor are eligible for reregistration.

DATES: Written comments on the REDs must be submitted by November 1, 1993.

ADDRESSES: Three copies of comments identified with the docket number "OPP–00362" should be submitted to: By mail: Public Response and Program Resources Branch, Field Operations Division (H7506C), Office of Pesticide Programs, Environmental Protection Agency, 401 M St., SW., Washington, DC 20460. In person, deliver comments to: Rm. 1132, CM #2, 1921 Jefferson Davis Highway, Arlington, VA.

Information submitted as a comment in response to this Notice may be claimed confidential by marking any part or all of that information as "Confidential Business Information" (CBI). Information so marked will not be disclosed except in accordance with procedures set forth in 40 CFR part 2. A copy of the comment that does not contain CBI must be submitted for inclusion in the public docket. Information not marked confidential will be included in the public docket without prior notice. The public docket and docket index will be available for public inspection in Rm. 1132 at the address given above, from 8 a.m. to 4:30 p.m., Monday through Friday, excluding legal holidays.

To request a copy of the above RED(s), or the RED Fact Sheets, contact the Public Response and Program Resources Branch, in Rm. 1132 at the address given above or call (703) 305–5805.

FOR FURTHER INFORMATION CONTACT: Technical questions on the RED for Silver should be directed to the Chemical Review Manager, Kathleen Depukat, at (703) 308–8587 and technical questions on the RED for Biobor should be directed to the Chemical Review Manager, Thomas Luminello, at (703) 308–8075.

SUPPLEMENTARY INFORMATION: The Agency has issued Reregistration Eligibility Documents for the pesticidal active ingredients: Silver and Biobor. Under the Federal Insecticide, Fungicide, and Rodenticide Act, as amended in 1988, EPA is conducting an accelerated reregistration program to reevaluate existing pesticides to make sure they meet current scientific and regulatory standards. The data bases to support the reregistration of the chemicals Silver and Biobor are substantially complete. EPA has determined that all products registered as of June 23, 1993 containing Silver and Biobor as active ingredients are eligible for reregistration.

All registrants of products containing Silver and Biobor have been sent the appropriate RED and must respond to the labeling requirements and the product specific data requirements (if applicable) within 8 months of receipt. These products will not be reregistered until adequate product specific data have been submitted and all necessary product label changes are implemented.

The reregistration program is being conducted under congressionally mandated time frames, and EPA recognizes both the need to make timely reregistration decisions and to involve the public. Therefore, EPA is issuing the REDs as final documents with a 60–day comment period. Although the 60–day public comment period does not affect the registrant's response due date, it is intended to provide an opportunity for public input and a mechanism for initiating any necessary amendments to the REDs. All comments will be carefully considered by the Agency and if any of those comments impact on the REDs, EPA will issue an amendment to the appropriate RED and publish a **Federal Register** Notice announcing its availability.

Dated: August 23, 1993.

Peter Caulkins,

Acting Director, Special Review and Reregistration Division, Office of Pesticide Programs.

[FR Doc. 93–21085 Filed 8–31–93; 8:45 am]

BILLING CODE 6560–50–F

FEDERAL COMMUNICATIONS COMMISSION

[Report No. 1960]

Petition for Reconsideration of Action in Rulemaking Proceeding

August 27, 1993.

Petition for reconsideration has been filed in the Commission rulemaking proceeding listed in this Public Notice and published pursuant to 47 CFR 1.429(e). The full text of this document is available for viewing and copying in room 239, 1919 M Street, NW., room 239, 1919 M Street, NW., Washington, DC or may be purchased from the Commission's copy contractor ITS, Inc. (202) 857–3800. Opposition to this petition must be filed by September 16, 1993. See § 1.4(b)(1) of the Commission's rules (47 CFR 1.4(b)(1)). Replies to an opposition must be filed within 10 days after the time for filing oppositions has expired.

Subject: Amendment of the Commission's Rules To Permit FM Channel and Class Modification by Application (MM Docket No. 92–159)

Number of Petitions Filed: 2

Federal Communications Commission.

William F. Caton,

Acting Secretary.

[FR Doc. 93–21167 Filed 8–31–93; 8:45 am]

BILLING CODE 6712–01–M

[Report No. 1961]

Petition for Reconsideration and Clarification of Action in Rulemaking Proceeding

August 27, 1993.

Petition for reconsideration and or clarification has been filed in the Commission rulemaking proceeding listed in this Public Notice and published pursuant to 47 CFR 1.429(e). The full text of this document is available for viewing and copying in room 239, 1919 M Street, NW., Washington, DC, or may be purchased from the Commission's copy contractor ITS; Inc. (202) 857–3800. Opposition to this petition must be filed September 16, 1993. See Section 1.4(b)(1) of the Commission's rules (47 CFR 1.4(b)(1)). Replies to an opposition must be filed within 10 days after the time for filing oppositions has expired.

Subject: Implementation of section 26 of the Cable Television Consumer Protection and Competition Act of 1992; Inquiry into Sports Programming Migration (PP Docket No. 93–21).

Number of Petitions Filed: 1.

Federal Communications Commission.

William F. Caton,

Action Secretary.

[FR Doc. 93–21168 Filed 8–31–93; 8:45 am]

BILLING CODE 6712–01–M

[Report No. I–6831]

FCC To Accept Applications for Service to Cuba

July 27, 1993.

The FCC has received a letter dated July 22, 1993, from the Department of State detailing general policy guidelines for implementation of the

telecommunications provisions of the Cuban Democracy Act (CDA). A copy of this letter is attached. Consistent with the letter, the FCC will act on applications for circuits between the United States and Cuba that comply with the Executive Branch criteria and meet the Commission's own legal and other requirements. Therefore, in addition to the Commission's existing application requirements for international service, applicants must comply with the criteria on page 2, must include the narrative description of their proposed agreements and the sworn statement listed on page 3 of the letter, and must submit copies of such documents to the Departments of Treasury and State. The Department of State in consultation with the Treasury and Commerce Departments will review U.S./Cuba telecommunications policy in twelve to eighteen months to insure that the CDA's mandates as well as overall foreign policy goals are being met.

For further information concerning this matter, please contact Adam Kupetsky or Linda Trochim at (202) 632-3214.

Federal Communications Commission.

William F. Caton,

Acting Secretary.

July 22, 1993.

Dear Chairman Quello: The purpose of this letter is to inform you of the Executive branch's general policy guidelines for implementation of the telecommunications provisions of the Cuban Democracy Act. These guidelines provide guidance to the Commission in considering proposals for telecommunications between the United States and Cuba. Also set forth is an action plan for the Departments of State, Treasury and Commerce, and the FCC.

Section 1705(e)(1) of the Cuban Democracy Act (CDA), states that "telecommunication services between the United States and Cuba shall be permitted." It further provides that "* * * telecommunications facilities are authorized in such quantity and of such quality as may be necessary to provide efficient and adequate telecommunications services between the United States and Cuba." The CDA also allows for full or partial payment of amounts due to Cuba as a result of the provision of such service.

Other provisions of the CDA are intended to tighten the economic embargo on Castro, and in section 1710(a) the Secretary of the Treasury is charged with ensuring that activities permitted under the CDA, such as telecommunications, are carried out for the purposes of the CDA and not for "the accumulation by the Cuban government of excessive amounts of United States currency or the accumulation of excessive profits by any person or entity."

The Executive branch has developed a policy which provides for open competition among all telecommunications carriers which comply with Federal Communications Commission regulations and are licensed as appropriate by Treasury's Office of Foreign Assets Control and Commerce's Bureau of Export Administration. The policy implements the applicable provisions of the CDA by authorizing the provision of service to Cuba as described below.

The Commission should use the following policy guidelines in approving proposals for telecommunications between the United States and Cuba:

(a) Proposals must have the potential to be operational within a year;

(b) Proposals must be limited to equipment and services necessary to deliver a signal to an international telecommunications gateway in Cuba;

(c) Settlements more favorable to Cuba than the current 50/50 split of the $1.20 per minute accounting rate shall not be permitted. In addition, Cuba shall cover half the costs of construction, maintenance and/or lease of transmission facilities, consistent with standard FCC practice;

(d) Proposals utilizing modes of communications already in place between the U.S. and Cuba (e.g., satellite, the undersea cable) will be approved. Proposals involving new modes of communications (e.g., fiber optic cable) will be reviewed by the appropriate agencies on a case-by-case basis;

(e) All circuits to Cuba must be specifically authorized. Carriers shall report the number of circuits activated by facility on June 30 and December 31 of each year, and on the one-year anniversary of the notification by FCC in the **Federal Register**;

(f) Treasury will license each U.S. company or U.S. subsidiary to remit to Cuba the full share of Cuba's earnings from the service approved by FCC; State will explore with Treasury and Commerce the possibility of licensing payment-in-kind (e.g., earth stations, satellite equipment, etc.) on a case-by-case basis;

(g) There will be no access to Cuba's blocked account of AT&T's past remittance;

(h) All applications approved by FCC must also be licensed as appropriate by Treasury or Commerce in consultation with State.

All previous licenses granted in the 1988 Memorandum Opinion and in subsequent FCC opinions may remain in force.

In order to implement the policy guidelines the Departments of State, Treasury, and Commerce and FCC will carry out the following plan of action:

Treasury (OFAC) will license travel and payment: OFAC will publish a **Federal Register** notice stating that it is prepared to provide licenses to U.S. companies to travel to Cuba to discuss possible contractual arrangements with EMTELCUBA. Follow-up visits will also be allowed. OFAC will also publish a notice informing carriers that Treasury (OFAC) must license all payment terms to Cuba and will only license transactions in Cuba necessary to deliver a signal to an international telecommunications gateway in Cuba.

Commerce will license export of U.S.-origin commodities: Commerce's Bureau of Export Administration will publish a **Federal Register** notice stating that it is updating its regulations to permit the export of telecommunications commodities to Cuba in connection with approved telecommunications projects to the extent that such exports are necessary to deliver a signal to an international telecommunications gateway in Cuba.

FCC will license circuits: The FCC will concurrently announce that it is prepared to grant the necessary licenses for all circuits requested that comply with the criteria, i.e., all applications which meet the Commission's legal requirements, which can be activated and effectively put into operation within twelve months of the date of publication of the initial OFAC notice, which involve existing modes of communications, and which are limited to equipment and services necessary to deliver a signal to an international telecommunications gateway in Cuba. FCC will consult with the appropriate agencies regarding proposals involving new modes of communication. FCC will announce the procedures by which U.S. carriers may apply for the circuits. The application procedure will require all applicants to provide a narrative description of their proposed agreement as well as a sworn statement that the foreign correspondent (EMTELCUBA) agrees to activate the proposed circuits on the Cuban end. Copies of such documents must also be submitted to the Departments of Treasury and State.

State in consultation with Treasury and Commerce will review: The FCC will also announce that U.S./Cuba telecommunications policy will be reviewed by the State Department in consultation with the Treasury and Commerce Departments, in twelve to eighteen months to ensure that the CDA's mandates as well as overall foreign policy goals are being met. At the time of this review, State, Treasury, and Commerce will be able to determine whether additional circuits should be authorized to keep the service "efficient and adequate;" and could assess whether to allow improvements in domestic infrastructure to improve U.S. access to the Cuban market.

The Department of State appreciates the close cooperation of the Commission throughout the years in implementing our telecommunications policy towards Cuba.

Sincerely Yours,

Richard C. Beaird,

Acting U.S. Coordinator and Director.

[FR Doc. 93-21169 Filed 8-31-93; 8:45 am]

BILLING CODE 6712-01-M

FEDERAL EMERGENCY MANAGEMENT AGENCY

[FEMA-1000-DR]

Kansas; Amendment to Notice of a Major Disaster Declaration

AGENCY: Federal Emergency Management Agency (FEMA).

ACTION: Notice.

SUMMARY: This notice amends the notice of a major disaster for the State of Kansas (FEMA-1000-DR), dated July 22, 1993, and related determinations.

EFFECTIVE DATE: August 26, 1993.

FOR FURTHER INFORMATION CONTACT: Pauline C. Campbell, Disaster Assistance Programs, Federal Emergency Management Agency, Washington, DC 20472, (202) 646–3606.

SUPPLEMENTARY INFORMATION: Notice is hereby given that the incident period for this disaster is closed effective August 26, 1993.

(Catalog of Federal Domestic Assistance No. 83.516, Disaster Assistance)

Richard W. Krimm,

Deputy Associate Director, State and Local Programs and Support.

[FR Doc. 93–21269 Filed 8–31–93; 8:45 am]

BILLING CODE 6718–02–M

[FEMA–997–DR]

Illinois; Amendment to Notice of a Major Disaster Declaration

AGENCY: Federal Emergency Management Agency (FEMA).

ACTION: Notice.

SUMMARY: This notice amends the notice of a major disaster for the State of Illinois (FEMA–997–DR), dated July 9, 1993, and related determinations.

EFFECTIVE DATE: August 26, 1993.

FOR FURTHER INFORMATION CONTACT: Pauline C. Campbell, Disaster Assistance Programs, Federal Emergency Management Agency, Washington, DC 20472, (202) 646–3606.

SUPPLEMENTARY INFORMATION: The notice of a major disaster for the State of Illinois dated July 9, 1993, is hereby amended to include the following areas among those areas determined to have been adversely affected by the catastrophe declared a major disaster by the President in his declaration of July 9, 1993:

Massac, Pope, and Pulaski Counties for Individual Assistance and Public Assistance.

(Catalog of Federal Domestic Assistance No. 83.516, Disaster Assistance)

Richard W. Krimm,

Deputy Associate Director, State and Local Programs and Support.

[FR Doc. 93–21268 Filed 8–31–93; 8:45 am]

BILLING CODE 6718–02–M

[FEMA–995–DR]

Missouri; Amendment to Notice of a Major Disaster Declaration

AGENCY: Federal Emergency Management Agency (FEMA).

ACTION: Notice.

SUMMARY: This notice amends the notice of a major disaster for the State of Missouri (FEMA–995–DR), dated July 9, 1993, and related determinations.

EFFECTIVE DATE: August 26, 1993.

FOR FURTHER INFORMATION CONTACT: Pauline C. Campbell, Disaster Assistance Programs, Federal Emergency Management Agency, Washington, DC 20472, (202) 646–3606.

SUPPLEMENTARY INFORMATION: The notice of a major disaster for the State of Missouri dated July 9, 1993, is hereby amended to include the following areas among those areas determined to have been adversely affected by the catastrophe declared a major disaster by the President in his declaration of July 9, 1993:

St. Clair County for Individual Assistance and Public Assistance.

Caldwell, Cass, Cooper, and Monroe Counties for Public Assistance. (Already designated for Individual Assistance.)

Crawford, Wayne, Stoddard, and St. Francois Counties for Individual Assistance.

(Catalog of Federal Domestic Assistance No. 83.516, Disaster Assistance)

Richard W. Krimm,

Deputy Associate Director, State and Local Programs and Support.

[FR Doc. 93–21270 Filed 8–31–93; 8:45 am]

BILLING CODE 6718–02–M

[FEMA–994–DR]

Wisconsin; Amendment to Notice of a Major Disaster Declaration

AGENCY: Federal Emergency Management Agency (FEMA).

ACTION: Notice.

SUMMARY: This notice amends the notice of a major disaster for the State of Wisconsin (FEMA–994–DR), dated July 2, 1993, and related determinations.

EFFECTIVE DATE: August 25, 1993.

FOR FURTHER INFORMATION CONTACT: Pauline C. Campbell, Disaster Assistance Programs, Federal Emergency Management Agency, Washington, DC 20472, (202) 646–3606.

SUPPLEMENTARY INFORMATION: Notice is hereby given that the incident period for this disaster is closed effective August 25, 1993.

(Catalog of Federal Domestic Assistance No. 83.516, Disaster Assistance)

Richard W. Krimm,

Deputy Associate Director, State and Local Programs and Support.

[FR Doc. 93–21267 Filed 8–31–93; 8:45 am]

BILLING CODE 6718–02–M

FEDERAL RESERVE SYSTEM

Daniel Marcus Boyd, III, et al.; Change in Bank Control Notices; Acquisitions of Shares of Banks or Bank Holding Companies; Correction

This notice corrects a notice (FR Doc. 93-20070) published at page 44185 of the issue for Thursday, August 19, 1993.

The deadline for comments regarding each of the applications listed under this heading is revised to read as September 8, 1993.

Board of Governors of the Federal Reserve System, August 26, 1993.

Jennifer J. Johnson,

Associate Secretary of the Board.

[FR Doc. 93-21224 Filed 8-31-93; 8:45 am]

BILLING CODE 6210-01-F

DEPARTMENT OF HEALTH AND HUMAN SERVICES

Administration for Children and Families

Agency Information Collection Under OMB Review

Under the provisions of the Paperwork Reduction Act (44 U.S.C. Chapter 35), we have submitted to the Office of Management and Budget (OMB) a request for approval for the continued use of an information collection titled: "Jobs Participation Rate Quarterly Report (Form ACF–103)." This request for clearance is made by the Office of Family Assistance of the Administration for Families and Children (ACY).

ADDRESSES: Copies of the Information Collection request may be obtained from Steve R. Smith, Office of Information Systems Management, ACY, by calling (202) 401–6964.

Written comments and questions regarding the requested approval for information collection should be sent directly to: Laura Oliven, OMB Desk Officer for ACF, OMB Reports Management Branch, New Executive Office Building, room 3002, 725 17th Street, NW., Washington, DC 20503, (202) 395–7316.

Information on Document

Title: JOBS Participation Rate Quarterly Report (Form ACF–103).

OMB No.: 0970–0098.

Description: The Job Opportunities and Basic Skills Training (JOBS) program was established under Title II of the Family Support Act for the purpose of amending Title IV of the Social Security Act to encourage and assist needy children and parents under

the new program to obtain the education, training and employment needed to avoid long-term welfare dependents, and to make other necessary improvements to assure that the new program will be more effective in achieving its objectives.

Section 201 (c)(2) of Title II of the Statute requires the Administration for Children and Families (ACF) to reduce the Federal Financial Participation (FFP) rate to 50% if a specified percent of those individuals required to participate do not participate. Consequently, ACF must collect information necessary to determine that each State has met the participation rate requirements specified in the Statute. If the State fails to provide the requested information, FFP rates may be established and paid that are incorrect.

Annual number of respondents	51
Annual frequency	4
Average burden hours per response	12
Total burden hours	2,448

Dated: August 16, 1993.

Larry Guerrero,

Deputy Director, Office of Information Systems Management.

[FR Doc. 93–21176 Filed 8–31–93; 8:45 am]

BILLING CODE 4184–01–M

Notice of Correction

AGENCY: Administration for Children and Families, HHS.

ACTION: Notice of correction.

SUMMARY: This Notice will correct two errors listed on the Table of Federal percentages calculated for the States of Ohio and Michigan for determining the amount of Federal matching in State welfare and medical expenditures for Fiscal Year 1994.

EFFECTIVE DATE: September 1, 1993.

FOR FURTHER INFORMATION CONTACT: Eugene Moyer, (202) 690–7861.

SUPPLEMENTARY INFORMATION: On December 7, 1992, the Office of the Secretary published a Notice in the **Federal Register** announcing the Federal Percentages and Federal Medical Assistance Percentages (FMAP) for use in determining the amount of Federal matching in State welfare and medical expenditures for October 1, 1993 through September 30, 1994. The percentages are applicable to programs under Aid to Families with Dependent Children, Foster Care and Adoption Assistance, Job Opportunities and Basic Skills Training, Medicaid, and Aid to Needy Aged, Blind, or Disabled Persons of the Social Security Act. The Notice provided a Table that listed matching percentages for each of the 50 States, the District of Columbia, Puerto Rico, the Virgin Islands, Guam, American Samoa, and the Northern Mariana Islands. The Federal percentages listed for the States of Michigan and Ohio are incorrect. The Federal percentage for Michigan is listed as 50%, the correct Federal percentage is 51.52%. The Federal percentage for Ohio is listed as 65%, the correct Federal percentage is 56.48%. The Federal Medical Assistance Percentages (FMAP) listed for both States are correct. The Department of Health and Human Services regrets these errors.

Dated: August 28, 1993.

Ann Rosewater,

Deputy Assistant Secretary for Policy and External Affairs.

[FR Doc. 93–21170 Filed 8–31–93; 8:45 am]

BILLING CODE 4184–01–M

Agency for Toxic Substances and Disease Registry

[ATSDR–71]

Availability of Draft Toxicological Profiles

AGENCY: Agency for Toxic Substances and Disease Registry (ATSDR), Public Health Service (PHS), Department of Health and Human Services (HHS).

ACTION: Notice of availability.

SUMMARY: This notice announces the availability of ten new draft toxicological profiles and one technical report on unregulated hazardous substances prepared for Department of Defense by ATSDR for review and comment.

DATES: To ensure consideration, comments on these draft toxicological profiles must be received on or before November 29, 1993. Comments received after the close of the public comment period will be considered at the discretion of ATSDR based upon what is deemed to be in the best interest of the general public.

ADDRESSES: Requests for copies of the draft toxicological profiles or comments regarding the draft toxicological profiles should be sent to the attention of Ms. Susie Tucker, Division of Toxicology, Agency for Toxic Substances and Disease Registry, Mailstop E–29, 1600 Clifton Road, NE., Atlanta, Georgia 30333.

Requests for the draft toxicological profiles must be in writing. Please specify the profiled hazardous substance(s) you wish to receive. ATSDR reserves the right to provide only one copy of each profile requested, free of charge. In case of extended distribution delays, requestors will be notified.

Written comments and other data submitted in response to this notice and the draft toxicological profiles should bear the docket control number ATSDR–71. Send one copy of all comments and three copies of all supporting documents to the Division of Toxicology at the above address by the end of the comment period. All written comments and draft profiles will be available for public inspection at the ATSDR, Building 4, Executive Park Drive, Atlanta, Georgia (not a mailing address), from 8 a.m. until 4:30 p.m., Monday through Friday, except for legal holidays. Because all public comments regarding ATSDR toxicological profiles are available for public inspection, no confidential business information should be submitted in response to this notice.

FOR FURTHER INFORMATION CONTACT: Ms. Susie Tucker at the Division of Toxicology, Agency for Toxic Substances and Disease Registry, Mailstop E–29, 1600 Clifton Road, NE., Atlanta, Georgia 30333, telephone (404) 639–6300.

SUPPLEMENTARY INFORMATION: The Superfund Amendments and Reauthorization Act (SARA) of 1986 (Pub. L. 99–499) amended the Comprehensive Environmental Response, Compensation, and Liability Act (CERCLA or Superfund). Section 211 of SARA also amended title 10 of the U.S. Code, creating the Defense Environmental Restoration Program. Section 2704(a) of title 10 of the U.S. Code directs the Secretary of Defense to notify the Secretary of Health and Human Services of not less than 25 of the most commonly found unregulated hazardous substances at defense facilities. Each profile and technical report includes an examination, summary and interpretation of available toxicological information and epidemiologic evaluations. This information and data are used to ascertain the levels of significant human exposure for the substance and the associated health effects. The profiles and technical reports include a determination of whether adequate information on the health effects of each substance is available or in the process of development. When adequate information is not available, ATSDR, in cooperation with the National Toxicology Program (NTP), plans a program of research designed to determine these health effects.

Although key studies for each of the substances were considered during the profile development process, this

Federal Register notice seeks to solicit any additional studies, particularly unpublished data and ongoing studies, which will be evaluated for possible addition to the profiles now or in the future.

The following draft toxicological profiles are expected to be available to the public on or about August 23, 1993.

Document and hazardous substance	CAS No.
1. Automotive gasoline	8006–61–9.
2. Diethyl phthalate	84–66–2.
3. Fuel oils..	
Fuel oil No. 1 (kerosene)	8008–20–6.
Fuel oil No. 1–D (diesel fuel No. 1).	No CAS #.
Fuel oil No. 2 (gas oil)	68476–30–2.
Fuel oil No. 2–D (diesel fuel No. 2).	68476–34–6.
Fuel oil No. 4 (residual fuel)	68476–31–3.
Fuel oil UNSP	No CAS #.
4. Jet fuels JP–4	50815–00–4.
Jet fuels JP–7	No CAS #.
5. Otto fuel II and its components.	106602–80–6.
Propylene glycol dinitrate	6423–43–4.
2–Nitrodiphenylamine	119–75–5.
Dibutyl sebacate	109–43–3.
6. RDX	121–82–4.
7. Stoddard solvent	8052–41–3.
8. Tetryl	479–45–8.
9. 1,3-Dinitrobenzene	99–65–0.
1,3,5-Trinitrobenzene	99–35–4.
10. 2,4,6-Trinitrotoluene technical report.	118–96–7.
11. Ethylene glycol	107–21–1.
Propylene glycol	57–55–6.

All profiles issued as "Drafts for Public Comment" represent the agency's best efforts to provide important toxicological information on priority hazardous substances. We are seeking public comments and additional information which may be used to supplement these profiles. ATSDR remains committed to providing a public comment period for these documents as a means to best serve public health and our clients.

Dated: August 26, 1993.

Walter R. Dowdle,

Deputy Administrator, Agency for Toxic Substances and Disease Registry.

[FR Doc. 93–21218 Filed 8–31–93; 8:45 am]

BILLING CODE 4160–70–P

Food and Drug Administration

[Docket No. 93M–0281]

Wesley-Jessen Corp., Premarket Approval of Wesley-Jessen® HS-16 Cleaning Solution

AGENCY: Food and Drug Administration, HHS.

ACTION: Notice.

SUMMARY: The Food and Drug Administration (FDA) is announcing its approval of the application by Wesley-Jessen Corp., Chicago, IL, for premarket approval, under section 515 of the Federal Food, Drug, and Cosmetic Act (the act), of the Wesley-Jessen® HS–16 Cleaning Solution. FDA's Center for Devices and Radiological Health (CDRH) notified the applicant, by letter of July 9, 1993, of the approval of the application.

DATES: Petitions for administrative review by October 1, 1993.

ADDRESSES: Written requests for copies of the summary of safety and effectiveness data and petitions for administrative review to the Dockets Management Branch (HFA–305), Food and Drug Administration, rm. 1–23, 12420 Parklawn Dr., Rockville, MD 20857.

FOR FURTHER INFORMATION CONTACT: James F. Saviola, Center for Devices and Radiological Health (HFZ–460), Food and Drug Administration, 1390 Piccard Dr., Rockville, MD 20850, 301–594–2080.

SUPPLEMENTARY INFORMATION: On March 19, 1991, Wesley-Jessen Corp., Chicago,IL 60610–3496, submitted to CDRH an application for premarket approval of the Wesley-Jessen® HS–16 Cleaning Solution. The device is indicated for use to clean soft (hydrophilic) contact lenses before rinsing and disinfection. In accordance with the provisions of section 515(c)(2) of the act as amended by the Safe Medical Devices Act of 1990, this PMA was not referred to the Opthalmic Devices Panel, an FDA advisory panel, for review and recommendation because the information in the PMA substantially duplicates information previously reviewed by this panel. On July 9, 1993, CDRH approved the application by a letter to the applicant from the Director of the Office of Device Evaluation, CDRH.

A summary of the safety and effectiveness data on which CDRH based its approval is on file in the Dockets Management Branch (address above) and is available from that office upon written request. Requests should be identified with the name of the device and the docket number found in brackets in the heading of this document.

Opportunity for Administrative Review

Section 515(d)(3) of the act (21 U.S.C. 360e(d)(3)) authorizes any interested person to petition, under section 515(g) of the act (21 U.S.C. 360e(g)), for administrative review of CDRH's decision to approve this application. A petitioner may request either a formal hearing under part 12 (21 CFR part 12) of FDA's administrative practices and procedures regulations or a review of the application and CDRH's action by an independent advisory committee of experts. A petition is to be in the form of a petition for reconsideration under § 10.33(b) (21 CFR 10.33(b)). A petitioner shall identify the form of review requested (hearing or independent advisory committee) and shall submit with the petition supporting data and information showing that there is a genuine and substantial issue of material fact for resolution through administrative review. After reviewing the petition, FDA will decide whether to grant or deny the petition and will publish a notice of its decision in the **Federal Register**. If FDA grants the petition, the notice will state the issue to be reviewed, the form of review to be used, the persons who may participate in the review, the time and place where the review will occur, and other details.

Petitioners may, at any time on or before October 1, 1993, file with the Dockets Management Branch (address above) two copies of each petition and supporting data and information, identified with the name of the device and the docket number found in brackets in the heading of this document. Received petitions may be seen in the office above between 9 a.m. and 4 p.m., Monday through Friday.

This notice is issued under the Federal Food, Drug, and Cosmetic Act (secs. 515(d), 520(h) (21 U.S.C. 360e(d), 360j(h))) and under authority delegated to the Commissioner of Food and Drugs (21 CFR 5.10) and redelegated to the Director, Center for Devices and Radiological Health (21 CFR 5.53).

Dated: August 24, 1993.

Joseph A. Levitt,

Deputy Director for Regulations Policy, Center for Devices and Radiological Health.

[FR Doc. 93-21187 Filed 8-31-93; 8:45 am]

BILLING CODE 4160-01-F

[Docket No. 93M–0186]

Wisconsin Pharmacal Co., Inc.; Premarket Approval of Reality™ Female Condom

AGENCY: Food and Drug Administration, HHS.

ACTION: Notice.

SUMMARY: The Food and Drug Administration (FDA) is announcing its approval of the application by Wisconsin Pharmacal Co., Inc., Jackson, WI, for premarket approval, under

section 515 of the Federal Food, Drug, and Cosmetic Act (the act), of the Reality™ Female Condom. After reviewing the recommendation of the Obstetrics-Gynecology Devices Panel, FDA's Center for Devices and Radiological Health (CDRH) notified the applicant, by letter of May 7, 1993, of the approval of the application.

DATES: Petitions for administrative review by October 1, 1993.

ADDRESSES: Written requests for copies of the summary of safety and effectiveness data and petitions for administrative review to the Dockets Management Branch (HFA–305), Food and Drug Administration, rm. 1–23, 12420 Parklawn Dr., Rockville, MD 20857.

FOR FURTHER INFORMATION CONTACT: Colin M. Pollard, Center for Devices and Radiological Health (HFZ–470), Food and Drug Administration, 1390 Piccard Dr., Rockville, MD 20850, 301–427–1180.

SUPPLEMENTARY INFORMATION: On October 29, 1991, Wisconsin Pharmacal Co., Inc., Jackson, WI 53037, submitted to CDRH an application for premarket approval of the Reality™ Female Condom. The device is an intravaginal barrier device and is indicated for use to help prevent pregnancy and sexually transmitted diseases (STD's), including the human immunodeficiency virus (HIV) infection, during vaginal intercourse.

On January 31 and December 10, 1992, the Obstetrics-Gynecology Devices Panel of the Medical Devices Advisory Committee, an FDA advisory committee, reviewed and recommended approval of the application. On May 7, 1993, CDRH approved the application by a letter to the applicant from the Deputy Director of the Office of Device Evaluation, CDRH.

A summary of the safety and effectiveness data on which CDRH based its approval is on file in the Dockets Management Branch (address above) and is available from that office upon written request. Requests should be identified with the name of the device and the docket number found in brackets in the heading of this document.

Opportunity for Administrative Review

Section 515(d)(3) of the act (21 U.S.C. 360e(d)(3)) authorizes any interested person to petition, under section 515(g) of the act (21 U.S.C. 360e(g)), for administrative review of CDRH's decision to approve this application. A petitioner may request either a formal hearing under part 12 (21 CFR part 12) of FDA's administrative practices and procedures regulations or a review of the application and CDRH's action by an independent advisory committee of experts. A petition is to be in the form of a petition for reconsideration under § 10.33(b) (21 CFR 10.33(b)). A petitioner shall identify the form of review requested (hearing or independent advisory committee) and shall submit with the petition supporting data and information showing that there is a genuine and substantial issue of material fact for resolution through administrative review. After reviewing the petition, FDA will decide whether to grant or deny the petition and will publish a notice of its decision in the **Federal Register**. If FDA grants the petition, the notice will state the issue to be reviewed, the form of review to be used, the persons who may participate in the review, the time and place where the review will occur, and other details.

Petitioners may, at any time on or before October 1, 1993, file with the Dockets Management Branch (address above) two copies of each petition and supporting data and information, identified with the name of the device and the docket number found in brackets in the heading of this document. Received petitions may be seen in the office above between 9 a.m. and 4 p.m., Monday through Friday.

This notice is issued under the Federal Food, Drug, and Cosmetic Act (secs. 515(d), 520(h) (21 U.S.C. 360e(d), 360j(h))) and under authority delegated to the Commissioner of Food and Drugs (21 CFR 5.10) and redelegated to the Director, Center for Devices and Radiological Health (21 CFR 5.53).

Dated: August 24, 1993.

Joseph A. Levitt,

Deputy Director for Regulations Policy, Center for Devices and Radiological Health.

[FR Doc. 93–21186 Filed 8–31–93; 8:45 am]

BILLING CODE 4160–01–F

Health Care Financing Administration

Public Information Collection Requirements (ICR) Submitted to the Office of Management and Budget (OMB) for Clearance

AGENCY: Health Care Financing Administration, HHS.

The Health Care Financing Administration (HCFA), Department of Health And Human Services, has submitted to OMB the following proposals for the collection of information in compliance with the Paperwork Reduction Act (Pub. L. 96–511).

1. *Type of Request:* New; *Title of Information Collection:* Prenatal Services and assistance screening questionnaire; *Form No.:* HCFA-R–158; *Use:* This survey is in support of a demonstration designed to improve access to prenatal care and drug treatment for Medicaid-Eligible Pregnant Substance Abusers. The survey will collect information on demographics, family status, health status, and substance abuse; *Frequency:* One-time only data collection; *Respondents:* Individuals or households; *Estimated Number of Responses:* 4,100; *Average Hours Per Response:* 0.333; *Total Estimated Burden Hours:* 1,365.

2. *Type of Request:* Extension; *Title of Information Collection:* Home Health Agency Treatment Forms; *Form Nos.:* HCFA–485 through 488; *Use:* These forms are an instrument used by the fiscal intermediaries to assure that reimbursement is made to home health agencies only for services that are covered under Medicare Part A or Part B. The medical information contained in these forms describes the patient and level of medical need and/or services provided; *Frequency:* On-Occasion; *Respondents:* Businesses or other for profit, nonprofit institutions, small businesses or organizations; *Estimated Number of Responses:* 6,115,288; *Average Hours Per Response:* 0.477 (reporting) 0.476 (recordkeeping); *Total Estimated Burden Hours:* 2,916,992 (reporting) 2,910,877, (recordkeeping) for a total of 5,834,872.

3. *Type of Request:* Reinstatement; *Title of Information Collection:* ICR in Conditions of Participation for Intermediate Care Facilities for the Mentally Retarded (ICFs/MR); *Form No.:* HCFA-R–120; *Use:* State agency surveyors need this information to assess quality of services provided in ICFs/MR; *Frequency:* Annually; *Respondents:* Businesses or other for profit; *Estimated Number of Responses:* 6,600; *Average Hours Per Response:* 1.036; *Total Estimated Burden Hours:* 6,837.6.

4. *Type of Request:* Reinstatement; *Title of Information Collection:* State Medicaid Eligibility Quality Control Sample Selection Lists; *Form No.:* HCFA–319; *Use:* At the beginning of each review month, State agencies are required to select a representative sample of cases from the eligibility files. The sample selection lists contain identifying information on Medicaid beneficiaries such as: review number, beneficiary name, street, city, and State address, the name of the county in which beneficiary resides, etc. HCFA reviews the sample to determine

whether States are sampling a sufficient number of cases to meet minimum requirements. Without these lists the integrity of the sampling would be suspect since HCFA would have no data on the adequacy of the State sample draw or review completion status; *Frequency:* Monthly; *Respondents;* State agencies; *Estimated Number of Responses;* 660 Annually; *Average Hours Per Response;* 8; *Total Estimated Burden Hours:* 5,280.

5. *Type of Request:* Reinstatement; *Title of Information Collection:* Prepaid Health Plan Cost Report; *Form No.:* HCFA–276; *Use:* These cost report forms are needed to establish the reasonable cost of delivering covered services furnished to Medicare enrollees in accordance with section 1876 of the Social Security Act; *Frequency:* Quarterly and Annually; *Respondents:* Businesses or other for profit; *Estimated Number of Responses:* 357; *Average Hours Per Response:* 29.2; *Total Estimated Burden Hours:* 10,424.4.

6. *Type of Request:* Reinstatement; *Title of Information Collection:* Hospital Survey Report Form; *Form No.:* HCFA–1537; *Use:* This form is used by the State agency to record information and data in order to determine provider compliance with individual conditions of participation. It is primarily a coding worksheet designed to facilitate data reduction and retrieval into the On-line Survey Certification and Reporting System (OSCAR) at the HCFA Regional Offices; *Frequency:* Annually; *Respondents:* State and local governments; *Estimated Number of Responses:* 1,539; *Average Hours Per Response:* 3.0; *Total Estimated Burden Hours:* 4,617.

7. *Type of Request:* Reinstatement; *Title of Information Collection:* Procedures for determining whether providers, practitioners, or other suppliers of services are liable for certain uncovered services *Form No.:* HCFA–R–77; *Use:* Regulation requires Peer Review Organizations (PRO) to provide written notification of noncovered services to beneficiaries and/or providers, practitioners, and suppliers. The regulation states that noncovered services will only be paid if the provider and/or beneficiary did not know and could not have reasonably expected to know that a service is not covered; *Frequency:* On Occasion; *Respondents:* Businesses/other for profit and small businesses/organizations; *Estimated Number of Responses:* 87,615; *Average Hours Per Response:* 0.083; *Total Estimated Burden Hours:* 7,272.

8. *Type of Request:* Extension; *Title of Information Collection:* Medicare Credit Balance Reporting Requirements; *Form No.:* HCFA–838; *Use:* Is needed to ensure that millions of dollars in improper program payments are collected. Health care providers will be required to submit a quarterly credit balance report that identifies the amount of improper payments they received that are due to Medicare; *Frequency:* Quarterly; *Respondents:* Businesses or other for profit, nonprofit institutions; *Estimated Number of Responses:* 119,600; *Average Hours Per Response:* 6; *Total Estimated Burden Hours:* 717,600.

9. *Type of Request:* New; *Title of Information Collection:* Medicare Provider Cost Report Questionnaire; *Form No.:* HCFA–339; *Use:* Completed by all providers to ensure proper Medicare reimbursement to providers and to minimize subsequent contact between the provider and its intermediary. The form is used to gather information necessary to support financial and statistical entries in the cost report; *Frequency:* Annually; *Respondents:* Businesses or other for profit, small businesses or organizations; *Estimated Number of Responses:* 22,006; *Average Hours Per Response:* 20; *Total Estimated Burden Hours:* 440,120.

10. *Type of Request:* Extension; *Title of Information Collection:* Medicare Current Beneficiary Survey Rounds 7–10; *Form No.:* HCFA–P–15A; *Use:* Medicare Current Beneficiary Survey Questionnaire Rounds 7–10 collect cost and utilization data for community and industrial population. Information collection includes: inpatient hospitalization, emergency room, outpatient clinics, provider use, prescribed medication and other medical equipment, cost, charges. Source of payment will be collected for each use; *Frequency:* Quarterly; *Respondents:* Individuals or households, businesses or other for profit, nonprofit institutions, small business or organizations; *Estimated Number of Responses:* 40,000; *Average Hours Per Response:* 1; *Total Estimated Burden Hours:* 40,000.

11. *Type of Request:* Reinstatement; *Title of Information Collection:* Sterilization Regulation/Consent Form; *Form No.:* HCFA–R–94; *Use:* All Medicaid eligible individuals seeking sterilization are required to provide informed consent, utilizing federally required consent forms; *Frequency:* Each time a Medicaid sterilization is sought; *Respondents:* Individuals or households, State or local governments, Federal agencies or employees; *Estimated Number of Responses:* 174,802; *Average Hours Per Response:* 1.25; *Total Estimated Burden Hours:* 218,503.

12. *Type of Request:* Reinstatement; *Title of Information Collection:* PRO Reconsideration and Appeals Information Requirements; *Form No.:* HCFA–R–72; *Use:* These regulations contain procedures for the PROs to use in reconsideration of initial determinations. The information requirements contained in these regulations are on PROs to provide information to parties requesting a reconsideration review. The parties will use the information as guidelines for appeal rights in instances where issues are still in dispute; *Frequency:* On Occasion; *Respondents:* Businesses or other for-profit, small business or organizations; *Estimated Number of Responses:* 58,734; *Average Hours Per Response:* 0.2376; *Total Estimated Burden Hours:* 13,955.

13. *Type of Request:* Reinstatement; *Title of Information Collection:* Information Collection Requirements in HSQ–110, Acquisition, Protection and Disclosure of PRO Information—42 CFR sections 476.104, 476.105, 476.116, and 476.134; *Form No.:* HCFA–R–70; *Use:* The Peer Review Improvement Act of 1982 authorizes PROs to acquire information necessary to fulfill their duties and functions and places limits on disclosure of the information. These requirements are on the PRO to provide notices to the affected parties when disclosing information about them. These requirements serve to protect the rights of the affected parties; *Frequency:* On Occasion; *Respondents:* Businesses or other for-profit; *Estimated Number of Responses:* 53; *Average Hours Per Response:* 576.92; *Total Estimated Burden Hours:* 30,576.76.

14. *Type of Request:* Reinstatement; *Title of Information Collection:* Medicare/Medicaid Organ Procurement Organization's (OPO) Request for Certification; *Form No.:* HCFA–576; *Use:* This form is a facility identification and screening measurement used to initiate the certification or recertification process and to determine if the provider is operating in compliance with the Conditions for Coverage for OPOs; *Frequency:* Annually; *Respondents:* State or local governments, small businesses or organizations; *Estimated Number of Responses:* 80; *Average Hours Per Response:* 2; *Total Estimated Burden Hours:* 160.

Additional Information or Comments: Call the Reports Clearance Office on (410) 966–5536 for copies of the clearance request packages. Written comments and recommendations for the proposed information collections

should be sent within 30 days of this notice directly to the OMB Desk Officer designated at the following address: OMB Human Resources and Housing Branch, Attention: Allison Eydt, New Executive Office Building, room 3001, Washington, DC 20503.

Dated: August 24, 1993.

Bruce C. Vladeck,

Administrator, Health Care Financing Administration.

[FR Doc. 93-21244 Filed 8-31-93; 8:45 am]

BILLING CODE 4120-03-P

[OIS-022-N]

Medicare and Medicaid Programs; Quarterly Listing of Program Issuances and Coverage Decisions—Second Quarter 1993

AGENCY: Health Care Financing Administration (HCFA), HHS.

ACTION: Notice.

SUMMARY: This notice lists HCFA manual instructions, substantive and interpretive regulations and other **Federal Register** notices, and statements of policy that were published during April, May and June of 1993 that relate to the Medicare and Medicaid programs. Section 1871(c) of the Social Security Act requires that we publish a list of Medicare issuances in the **Federal Register** at least every 3 months. Although we are not mandated to do so by statute, for the sake of completeness of the listing, we are including all Medicaid issuances and Medicare and Medicaid substantive and interpretive regulations (proposed and final) published during this timeframe.

There are no revisions to the Medicare Coverage Issues Manual this quarter.

FOR FURTHER INFORMATION CONTACT:

Margaret Cotton, (410) 966-5260 (For Medicare Instruction Information);
Sam DellaVecchia, (410) 966-5395 (For Medicare Coverage Information);
Dusty Kowalewski, (410) 965-3377 (For Medicaid Instruction Information);
Jacqueline Kidd, (410) 966-4682 (For All Other Information).

SUPPLEMENTARY INFORMATION:

I. Program Issuances

The Health Care Financing Administration (HCFA) is responsible for administering the Medicare and Medicaid programs, which pay for health care and related services for 36 million Medicare beneficiaries and 33 million Medicaid recipients. Administration of these programs involves: (1) Providing information to Medicare beneficiaries and Medicaid recipients, health care providers, and the public; and (2) effective communications with regional offices, State governments, State Medicaid Agencies, State Survey Agencies, various providers of health care, fiscal intermediaries, and carriers who process claims and pay bills, and others. To implement the various statutes on which the programs are based, we issue regulations under authority granted the Secretary under sections 1102, 1871, and 1902 and related provisions of the Social Security Act (the Act) and also issue various manuals, memoranda, and statements necessary to administer the programs efficiently.

Section 1871(c)(1) of the Act requires that we publish in the **Federal Register** at least every 3 months a list of all Medicare manual instructions, interpretive rules, statements of policy, and guidelines of general applicability not issued as regulations. We published our first notice June 9, 1988 (53 FR 21730). Although we are not mandated to do so by statute, for the sake of completeness of the listing of operational and policy statements, we are continuing our practice of including Medicare substantive and interpretive regulations (proposed and final) published during this timeframe. Since the publication of our quarterly listing on June 12, 1992 (57 FR 24797), we decided to add Medicaid issuances to our quarterly listings. Accordingly, we are listing in this notice, Medicaid issuances and Medicaid substantive and interpretive regulations published from April 1 through June 30, 1993.

II. Medicare Coverage Issues

We receive numerous inquiries from the general public about whether specific items or services are covered under Medicare. Providers, carriers, and intermediaries have copies of the Medicare Coverage Issues Manual, which identifies those medical items, services, technologies, or treatment procedures that can be paid for under Medicare. On August 21, 1989, we published a notice in the **Federal Register** (54 FR 34555) that contained all the Medicare coverage decisions issued in that manual.

In that notice, we indicated that revisions to the Coverage Issues Manual will be published at least quarterly in the **Federal Register**. We also sometimes issue proposed or final national coverage decision changes in separate **Federal Register** notices. Readers should find this an easy way to identify both issuance changes to all our manuals and the text of changes to the Coverage Issues Manual.

Revisions to the Coverage Issues Manual are not published on a regular basis but on an as needed basis. We publish revisions as a result of technological changes, medical practice changes, responses to inquiries we receive seeking clarifications, or the resolution of coverage issues under Medicare.

III. How To Use the Addenda

This notice is organized so that a reader may review the subjects of all manual issuances, memoranda, substantive and interpretive regulations, or coverage decisions published during this timeframe to determine whether any are of particular interest. We expect it to be used in concert with previously published notices. Most notably, those unfamiliar with a description of our Medicare manuals may wish to review Table I of our first three notices (53 FR 21730, 53 FR 36891, and 53 FR 50577) and the notice published March 31, 1993 (58 FR 16837), and those desiring information on the Medicare Coverage Issues Manual may wish to review the August 21, 1989 publication.

In order to aid the reader, we have replaced the tables and reorganized and divided this current listing into four addenda.

Addendum I identifies updates that changed the Coverage Issues Manual. We published notices in the **Federal Register** that included the text of changes to the Coverage Issues Manual. These updates, when added to material from the manual published on August 21, 1989, constitute a complete manual as of March 31, 1993. Parties interested in obtaining a copy of the manual and revisions should follow the instructions in section IV of this notice.

Addendum II identifies previous **Federal Register** documents where interested individuals can get a description of all previously published HCFA Medicare and Medicaid manuals and memoranda.

Addendum III of this notice lists, for each of our manuals or Program Memoranda, a HCFA transmittal number unique to that instruction and its subject matter. A transmittal may consist of a single instruction or many. Often it is necessary to use information in a transmittal in conjunction with information currently in the manuals.

Addendum IV lists all substantive and interpretive Medicare and Medicaid regulations and general notices published in the **Federal Register** during the quarter covered by this notice. For each item, we list the date published, the **Federal Register** citation, the title of the regulation, and the parts

of the Code of Federal Regulations (CFR) which have changed.

IV. How To Obtain Listed Material

A. Manuals

An individual or organization interested in routinely receiving any manual and revisions to it may purchase a subscription to that manual. Those wishing to subscribe should contact either the Government Printing Office (GPO) or the National Technical Information Service (NTIS) at the following addresses:

Superintendent of Documents, Government Printing Office, ATTN: New Order, P.O. Box 371954, Pittsburgh, PA 15250–7954, Telephone (202) 783–3238, Fax number (202) 512–2250 (for credit card orders); or

National Technical Information Service, Department of Commerce, 5825 Port Royal Road, Springfield, VA 22161, Telephone (703) 487–4630.

In addition, individual manual transmittals and Program Memoranda listed in this notice can be purchased from NTIS. Interested parties should identify the transmittal(s) they want. GPO or NTIS can give complete details on how to obtain the publications they sell.

B. Regulations and Notices

Regulations and notices are published in the daily **Federal Register**. Interested individuals may purchase individual copies or subscribe to the **Federal Register** by contacting the GPO at the same address indicated above for manual issuances. When ordering individual copies, it is necessary to cite either the date of publication or the volume number and page number.

C. Rulings

Rulings are published on an infrequent basis by HCFA. Interested individuals can obtain copies from the nearest HCFA Regional Office or review them at the nearest regional depository library. We also sometimes publish Rulings in the **Federal Register**.

D. HCFA's Compact Disk–Read Only Memory (CD–ROM)

Beginning July 1, 1993, HCFA's laws, regulations, and manuals are available on CD–ROM, which may be purchased from the GPO or NTIS on a subscription or single copy basis. The Superintendent of Documents list ID is HCLRM, and the stock number is 717–139–00000–3. The following material is contained on the CD–ROM:

- Titles XI, XVIII, and XIX of the Act.
- HCFA-related regulations.
- HCFA manuals and monthly revisions.
- HCFA program memoranda.

The titles are current as of the September 1, 1992, update of the Compilation of the Social Security Laws, and the regulations are those in effect as of October 1, 1992.

The CD–ROM does not contain Appendices M (Interpretative Guidelines for Hospices) and R (Resident Assessment for Long Term Care Facilities) of the State Operations Manual. Copies of these appendices may be seen at a Federal Depository Library (FDL).

Any cost report forms incorporated in the manuals are included on the CD–ROM as LOTUS files. LOTUS software is required to view the reports once the files have been copied to a personal computer disk.

V. How To Review Listed Material

Transmittals or Program Memoranda can be reviewed at a local FDL. Under the FDL Program, government publications are sent to approximately 1400 designated libraries throughout the United States. Interested parties may examine the documents at any one of the FDLs. Some may have arrangements to transfer material to a local library not designated as an FDL. To locate the nearest FDL, individuals should contact any library.

In addition, individuals may contact regional depository libraries, which receive and retain at least one copy of nearly every Federal government publication, either in printed or microfilm form, for use by the general public. These libraries provide reference services and interlibrary loans; however, they are not sales outlets. Individuals may obtain information about the location of the nearest regional depository library from any library.

Superintendent of Documents numbers for each HCFA publication are shown in Addendum III, along with the HCFA publication and transmittal numbers. To help FDLs locate the instruction, use the Superintendent of Documents number, plus the HCFA transmittal number. For example, to find the Carriers Manual, Part 3—Claims Process (HCFA-Pub. 14–3) transmittal entitled "Rules for Calculating Medicare Secondary Payer Amounts, Effect on Primary Payments on Deductibles and Coinsurance, and Limitations on Right to Change Beneficiary" use the Superintendent of Documents No. HE 22.8/7, and the HCFA transmittal number IM–93–1.

VI. General Information

It is possible that an interested party may have a specific information need and not be able to determine from the listed information whether the issuance or regulation would fulfill that need. Consequently, we are providing information contact persons to answer general questions concerning these items. Copies are not available through the contact persons. Copies can be purchased or reviewed as noted above.

Questions concerning Medicare items in Addenda III may be addressed to Margaret Cotton, Office of Issuances, Health Care Financing Administration, Room 688 East High Rise, 6325 Security Blvd., Baltimore, MD 21207, Telephone (410) 966–5260.

Questions concerning Medicaid items in Addenda III may be addressed to Dusty Kowalewski, Medicaid Bureau, Office of Medicaid Policy, Health Care Financing Administration, Room 233 East High Rise, 6325 Security Blvd., Baltimore, MD 21207, Telephone (410) 965–3377.

Questions concerning all other information may be addressed to Jacqueline Kidd, Regulations Staff, Health Care Financing Administration, room 132 East High Rise, 6325 Security Blvd., Baltimore, MD 21207, Telephone (410) 966–4682.

(Catalog of Federal Domestic Assistance Program No. 93.773, Medicare—Hospital Insurance, Program No. 93.774, Medicare—Supplementary Medical Insurance Program, and Program No. 93.714, Medical Assistance Program)

Dated: July 29, 1993.

Bruce C. Vladeck,

Administrator, Health Care Financing Administration.

Addendum I

This addendum lists the publication dates of the quarterly listing of program issuances and coverage decision updates to the Coverage Issues Manual.

March 20, 1990 (55 FR 10290)
February 6, 1991 (56 FR 4830)
July 5, 1991 (56 FR 30752)
November 22, 1991 (56 FR 58913)
January 22, 1992 (57 FR 2558)
March 16, 1992 (57 FR 9127)
June 11, 1992 (57 FR 24797)
October 16, 1992 (57 FR 47468)
January 7, 1993 (58 FR 3028)
March 31, 1993 (58 FR 16837)
July 9, 1993 (58 FR 36967)

Addendum II—Description of Manuals, Memoranda, and HCFA Rulings

An extensive descriptive listing of Medicare manuals and memoranda was previously published on June 9, 1988 at 53 FR 21730 and supplemented on

September 22, 1988 at 53 FR 36891 and December 16, 1988 at 53 FR 50577. Also, a complete description of the Medicare Coverage Issues Manual was published on August 21, 1989 at 54 FR 34555. A brief description of the various Medicaid manuals and memoranda that we maintain was published on October 16, 1992 at 57 FR 47468.

ADDENDUM III—MEDICARE AND MEDICAID MANUAL INSTRUCTIONS

[April Through June 1993]

Trans. No.	Manual/subject/publication number
	Intermediary Manual **Part 2—Audits, Reimbursement Program Administration (HCFA–Pub. 13–2)** **(Superintendent of Documents No. HE 22.8/6–2)**
392	• Maximum Payment Per Visit for Freestanding Federally Qualified Health Centers.
	Payment Limit for Freestanding FQHC Networks.
	Interim Cost Reporting Instructions for Freestanding FQHCs.
	Exception Option for Federally Funded Health Centers as of September 30, 1991.
393	• Completion of the Report of Benefit Savings.
	Medical Review Activity Reports.
	List of MR Codes, Categories, and Conversion Factors.
	Intermediary Manual **Part 3—Claims Process** **(Superintendent of Documents No. HE 22.8/6)**
IM–93–1	• Rules for Calculating Medicare Secondary Payer Amounts, Effect of Primary Payer Amounts, Effect of Primary Payments on Deductibles and Coinsurance, and Limitation on Right to Charge Beneficiary.
	Definition of Third Party Payer.
	Definition of Gross Amount Payable by Medicare.
	When Medicare Secondary Benefits Are Not Payable.
	When Medicare Secondary Benefits Are Payable.
	Calculating Medicare Secondary Payments When Proper Claim Has Been Filed.
	Calculating Medicare Secondary Payments When Proper Claim Has Not Been Filed With Third Party Payer.
	Effect of Primary Payments on Deductibles and Coinsurance.
	Right of Provider to Charge Beneficiary Who Has Received Third Party Payment.
	Duplicate Payments.
1591	• Fraud and Abuse.
1592	• Rural Health Clinic Services.
	RHC Services Defined.
	Services Furnished by RHCs Which Are Not RHC Services.
	Payment Under Part B for Non-RHC Services Furnished By Independent RHCs.
	Federally Qualified Health Center Services.
	Types of FQHC Services.
	Qualifications of FQHCs.
	Charges to Medicare Beneficiaries.
	Beneficiary Eligibility for FQHC Services.
	Review of Form HCFA–1450 for Inpatient and Outpatient Bills.
	Federally Qualified Health Centers.
1593	• Responsibility for Medicare Secondary Payer Outreach Program.
	National Standard Electronic PC-Print Software.
1594	• Mammography Screening.
1595	• Part A Inquiry Screen Display-HIQA.
	Part A Inquiry Reply Screen Display-HIQAR.
	Part A Inquiry Data-HUQA.
	Part A Inquiry Reply Data-HUQA.
	Health Insurance Master Record Inquiry.
	HIMR Main Menu.
	Beneficiary Master Information.
	Medicare Secondary Payer Information Group Health Organization.
	Hospice Enrollment.
	Surgery Information.
	End Stage Renal Disease.
	Beneficiary Cross-Reference.
	DMEPOS CMN Display.
	True Not In File Status.
	Claim History Information.
	Archieved History Information.
1596	• Medical Review of Home Health Services.
	HCFA–485—Home Health Certification and Plan of Treatment Data Elements.
	Medical Review Activity Reports.
1597	• Review of Hospice Bills.
	Billing for a Fourth Hospice Benefit Period.
	Focused Medical Review.
1598	• Hospital Outpatient Partial Hospitalization Services.

ADDENDUM III—MEDICARE AND MEDICAID MANUAL INSTRUCTIONS—Continued

[April Through June 1993]

Trans. No.	Manual/subject/publication number
1599	• Drugs and Biologicals.
	Drugs Covered Under Composite Rate.
	Separately Billing Drugs.
	Antibiotics Furnished to Method II Patients.
1600	• CWF Utilization Edits.
	CWF Inpatient, SNF, Outpatient, Home Health, Hospice-Consistency Edits.
	CWF Adjustment Actions.
	Forms HCFA–L1001 and HCFA–L1002, Notification of Internal Adjustment Action(s) Taken by HCFA, Specifically the Common Working File.
1601	• Clinical Laboratory Improvement Amendments.
	Billing for Hospital Outpatient Services Furnished by Clinical Social Workers.
	Carriers Manual Part 3—Claims Process (HCFA–Pub. 14–3) (Superintendent of Documents No. HE 22.8/7)
IM–93–1	Rules for Calculating Medicare Secondary Payer Amounts, Effect of Primary Payments on Deductibles and Coinsurance, and Limitation on Right to Charge Beneficiary.
	Definition to Third Party Payer.
	When Medicare Secondary Benefits Are Payable.
	When Medicare Secondary Benefits Are Not Payable.
	Calculating Medicare Secondary Payments for Services Reimbursed on Reasonable Charge Baiss or Other Basis under Part B.
	Effect of Failure to File Proper Claim.
	Effect of Primary Payments on Deductibles and Coinsurance.
	Right of Physician or Supplier to Charge Beneficiary.
	Charging Expenses Against Annual Limit on Incurred Expenses for Services of Independently Practicing Physical Therapists.
1448	• Fraud and Abuse.
	Form SSA–3319, Referral of Potential Medicare Violation.
	Sample Letter to Notify Physician or Supplier of the Penalties for Assignment Violations.
	Form SSA–2808, Notice of Reported Assignment Agreement Violation.
1449	• Type of Service.
1450	• Drugs and Biologicals.
	Separately Billable Tests Furnished to Patients of Independent Dialysis Facilities.
1451	• List, Definition and Required Actions for Part B Basic Reply Disposition Codes.
1452	• List of Covered Surgical Procedures.
1453	• Notification of Payment.
1454	• Underpayments.
1455	• Physician and Supplier Billing Requirements for Services Furnished On or After September 1, 1990.
1456	• Medicare Participating Physicians/Suppliers Directory.
	Furnishing Participating Physicians/Suppliers Data to Railroad Retirement Board.
	Furnishing RRB with Participating Information for Other Than the General Enrollment Period.
1457	• Effect of Beneficiary Agreements Not to Use Medicare Coverage.
1458	• Claims for Outpaitent Services Furnished by a Clinical Social Worker.
	Payment to Clinical Social Workers.
1459	• Outpatient Mental Health Treatment Limitation.
	Application of Limitation.
	Expenses Incurred Before 1990.
1460	• Denial of Medicare Payment for Compounded Drugs Produced in Violation of Federal, Food, Drug, and Cosmetic Act.
1461	• Physician and Supplier Billing Requirements for Services Furnished On or After September 1, 1990 (Inadvertently omitted from Trans. No. 1443).
	Carriers Manual Part 4—Professional Relations (HCFA–Pub. 14–4) (Superintendent of Documents No. HE 22.8/7–4)
7	• UPINs for Ordering/Referring Physicians.
	CWF Edits and Claims Processing Requirements.
	• Surrogate UPINs.
	Monitoring Compliance.
	Program Memorandum Intermediaries (HCFA–Pub. 60A) (Superintendent of Documents No. HE 22.8/6–5)
A–93–1	• Submission of Form HCFA–2540–92 (Skilled Nursing Facility and Skilled Nursing Facility Health Care Complex Cost Report).

ADDENDUM III—MEDICARE AND MEDICAID MANUAL INSTRUCTIONS—Continued

[April Through June 1993]

Trans. No.	Manual/subject/publication number
	Program Memorandum Intermediaries/Carriers (HCFA–Pub. 60 A/B) (Superintendent of Documents No. HE 22.8/6–5)
AB–93–2	• Misleading Advertising or Solicitation by Providers of Medicare-Covered Services.
	State Operations Manual Provider Certification (HCFA–Pub. 7) (Superintendent of Documents No. HE 22.8/12)
258	• Reuse of Hemodialyzer and Other Dialysis Supplies.
259	• Clinical Laboratory Improvement Amendments of 1988.
	Regional Office Manual (HCFA–Pub. 23–2) Part 2—Medicare (Superintendent of Documents No. HE 22.8/8)
326	• Contractor Performance Evaluation Program.
	CPEP Principles.
	CPEP Review Report.
	Peer Review Organization (HCFA–Pub. 19) (Superintendent of Documents No. HE 8/8–15)
11	• Purpose of CAPs.
	Monitoring Responsibilities.
	CAP Format.
12	• Background.
	Definitions.
	Responsibilities of the Project Officer.
13	• General System Design—FFS.
	Peer Review Information Sampling System.
	PRO Process, Edit and Report System.
	Global Reports of Verified and Edited Reviews.
	Medical Review Automated Reporting System.
	Introduction.
	Boxing of Records—General.
	Boxing of Review Records.
	Boxing of Data.
	Boxing of Miscellaneous Records.
	Retention of Financial Records.
14	• Citations and Authority.
	Identification of Potential Violations.
	Requirements Prior to Initiating Sanction Procedures.
	Sanction Procedures for Substantial Violations.
	Sanction Procedures for Gross and Flagrant Violations.
	Procedures for Discussions With Practitioners or Other Persons.
	Initial Notification to the Practitioner or Other Person When Substantial and Gross and Flagrant Violations are Determined Concurrently.
	Practitioner Relocates to or Starts Practicing in Another PRO Area Prior to a Final Determination of a Violation.
	PRO Report to OIG.
	Review of PRO Report by the OIG.
	Imposition of Sanctions.
	Notification of Sanction to be Imposed.
	Effect of an Exclusion on Medicare Payments and Services.
	Reinstatement After Exclusion.
	Appeal Rights of the Practitioner or Other Person Under Section 1156.
	List of OIG Field Offices.
	Combined Initial Sanction Notice of Substantial Violation in a Substantial Number of Cases and in a Gross and Flagrant Violation.
15	• Authority.
	PRO/Carrier Meetings.
	Carrier Notice and Comment Process.
	PRO Medical Review Criteria.
	Carrier Advisory Committee.
	Reports.
16	• Request for Hearing of PRO Reconsideration of a Denial Determination.
	Preparing the Acknowledgment Letter.
	Assembling the Hearing Claim File.
	Prehearing Case Review.
	Routing the Hearing Claim File to OHA.
	Reporting Requirements.

ADDENDUM III—MEDICARE AND MEDICAID MANUAL INSTRUCTIONS—Continued

[April Through June 1993]

Trans. No.	Manual/subject/publication number
	Hearings by an ALJ.
	Appeals Council Review.
	Sample Acknowledgment Letter to Beneficiary/Representative When Hearing Request is Sent to the Hearing Office.
	How to Locate the Correct Hearing Office.
	Request for Hearing.
	Sample Letter to Fiscal Intermediary.
	Sample Enclosure for FI Letter.
	PRO Case Summary.
	Transmittal Notice—Hearing Case.
	Hearing Folder Cover Sheet.
17	• Types of Denial.
	Notification of Denial.
	Timing of Denial Notice.
	Content of Denial Notice.
	Limitation of Liability Model Paragraphs.
	Reconsideration Model Paragraphs.
	Physician Attestation/Acknowledgment Errors Denial Model Notice.
	Record Not Submitted Timely Denial Model Notice.
	Billing Error Denial Model Notice.
	Preadmission Denial Model Notice.
	Admission Denial Model Notices.
	Continued Stay Denial Model Notices.
	Procedure Denial Model Notice.
	Day Outlier Denial Model Notice.
	Cost Outlier Denial Model Notices.
	DRG Changes as a Result of DRG Validation Model Notice.
	Outpatient/Ambulatory Surgery Denial Model Notices.
	Continued Stay Denial Completed Notice.
18	• Responsibilities of the Board.
	Health Care Affiliate Limitations.
	Consumer Representative.
	Prohibition Against Sanctioned Board Members.
	Permitted Activities.
	Authority.
19	• DRG Validation Re-reviews.
	Statutory and Regulatory Requirements.
	Requests for Reconsideration.
	PRO Reconsiderations.
	Reconsideration Process.
	Appeals.
	Reconsideration Notices—Hearings Model Paragraphs.
	Reconsideration Model Notice—Preadmission Denial.
	Reconsideration Model Notice—Admission Denial.
	Reconsideration Model Notice—Continued Stay Denial.
	Reconsideration Model Notice—Procedure Denial.
	Reconsideration Model Notice—Day Outlier Denial.
	Reconsideration Model Notice—Cost Outlier Denial.
	Re-Review Model Notice—DRG Changes as a Result of DRG Validation.
	Reconsideration Model Notice—Outpatient/Ambulatory Surgery Denial.
	Reconsideration Complete Notice—Continued Stay Denial.
	Hospital Manual (HCFA–Pub. 10) (Superintendent of Documents No. 22.88/2)
648	• Billing for Mammography Screening.
649	• Billing for Hospital Outpatient Partial Hospitalization Services.
650	• Drugs and Biologicals.
	Drugs Covered Under Composite Rate.
	Separately Billable Drugs.
651 to 652	• Notice to Beneficiaries.
	PRO Monitoring of Hospital Admission Notice Beneficiaries.
	An Important Message From Medicare.
	• Clinical Laboratory Improvement Amendments.
	Billing for Hospital Outpatient Services Furnished by Clinical Social Workers.
	Home Health Agency Manual (HCFA–Pub. 11) (Superintendent of Documents No. HE 22.8/5)
260	Data Elements Needed to Render a Home Health Coverage Determination.
	HCFA–485—Home Health Certification and Plan of Treatment.

ADDENDUM III—MEDICARE AND MEDICAID MANUAL INSTRUCTIONS—Continued

[April Through June 1993]

Trans. No.	Manual/subject/publication number
261	Clinical Laboratory Improvement Amendments.
	Skilled Nursing Facility Manual (HCFA–Pub. 12) (Superintendent of Documents No. 22.8/3)
320	Billing for Mammography Screening.
321	Clinical Laboratory Improvement Amendments.
	Rural Health Clinic and Federally Qualified Health Center Manual (HCFA–Pub. 27) (Superintendent of Documents No. HE 22.8/19:985)
5	• Mental Health Services Limitation—Expenses Incurred for Physicians', Clinical Psychologists', and Clinical Social Workers Services Rendered in a Rural Health Clinic or Federally Qualified Health Center. Psychiatric Services Limitation Computation for Independent Rural Health Clinics and Federally Qualified Health Centers. Billing for Mawmmography Screening by Rural Health Clinics and Federally Qualified Health Centers.
6	• Clinical Laboratory Improvement Amendments.
	Renal Dialysis Facility Manual (Non-Hospital Operated) (HCFA–Pub. 29) (Superintendent of Documents No. HE.8/13)
60	• Laboratory Tests for Hemodialysis, Intermittent Peritoneal Dialysis and Continuous Cycling Peritoneal Dialysis.
61	• Clinical Laboratory Improvement Amendments.
	Hospice Manual (HCFA–Pub. 21) (Superintendent of Documents No. HE 22.8/18)
35	• Notice of Election. Completing the Uniform (Institutional Provider) Bill (Form HCFA–1450) Notice of Election. Billing for a Fourth Hospice Benefit Period.
36	• Clinical Laboratory Improvement Amendments.
	Provider Reimbursement Manual Part I—Chapter 27 Reimbursement for ESRD and Transplant Services (HCFA–Pub. 15–1–27) (Superintendent of Documents No. HE 22.8/4)
22	• Payment for Hepatitis B Vaccine Furnished to ESRD Patients.
	Provider Reimbursement Manual Part II—Provider Cost Reporting Forms and Instructions (General) (HCFA–Pub. 15-IIA) (Superintendent of Documents No. HE 22.8/4)
15	• Submission of Cost Reports.
	Provider Reimbursement Manual Part II—Provider Cost Reporting Forms and Instructions (Chapter 18) (HCFA–Pub. 15–II–R) (Superintendent of Documents No. HE 22.8/4)
1	• Outpatient Rehabilitation Provider Cost Report, Form HCFA–2088–92.
	Provider Reimbursement Manual Part II—Provider Cost Reporting Forms and Instructions (Chapter 24) (HCFA–Pub. 15–IIX) (Superintendent of Documents No. HE 22.8/4)
5	• Worksheet A—Reclassification and Adjustment of Trial Balance of Expenses. Part I—All Provider Components. Part II—Hospital and Subproviders Only. Part A—Inpatient Hosptial Services Under PPS. Supplemental Worksheet F–2—Computation of Difference Between Total Interim Payments and Net Cost of Covered Services.
	Provider Reimbursement Manual Part II—Provider Cost Reporting Forms and Instructions (Chapter 28) (HCFA–Pub. 15–IIAB) (Superintendent of Documents No. HE 22.8/4)
2	• Corrections to Hospital and Hospital Health Care Complex Cost Report Form HCFA–2552–92 Issued October 1992. Part I—Analysis.

ADDENDUM III—MEDICARE AND MEDICAID MANUAL INSTRUCTIONS—Continued

[April Through June 1993]

Trans. No.	Manual/subject/publication number
	Provider Reimbursement Manual Part II—Provider Cost Reporting Forms and Instructions (Chapter 29) (HCFA–Pub. 15–IIAC) (Superintendent of Documents No. HE 22.8/4)
1	• Independent Rural Health Clinic and Freestanding Federally Qualified Health Center Cost Report, Form HCFA–222–92.
	State Medicaid Manual Part 4—Services (HCFA–Pub. 45–4) (Superintendent of Documents No. HE 22.8/10)
62	• Less Than Effective and Identical, Related or Similar Drugs.
	State Medicaid Manual Part 6—Payment for Services (HCFA–Pub. 45–6) (Superintendent of Documents No. HE 22.8/10)
22	• Changes to Federal Upper Limits Listing.
	Medicare/Medicaid Sanction—Reinstatement Report (HCFA–Pub. 69)
93–3	• Report of Physicians/Practitioners, Providers and/or Other Health Care Suppliers Excluded/Reinstated.
93–4	• Report of Physicians/Practitioners, Providers and/or Other Health Care Suppliers Excluded/Reinstated.
93–5	• Report of Physicians/Practitioners, Providers and/or Other Health Care Suppliers Excluded/Reinstated.
93–6	• Report of Physicians/Practitioners, Providers and/or Other Health Care Suppliers Excluded/Reinstated.

ADDENDUM IV.—REGULATIONS AND NOTICES PUBLISHED APRIL THROUGH JUNE 1993

Publication date/citation	42 CFR Part	Title
Final Rules:		
01/19/93 (58 FR 4904)	433, 435, 436	Medicaid Program; Exemption of Poverty Level Pregnant Women from the Cooperation Requirements of Establishing Paternity and Obtaining Medical Support and Payments as a Condition of Eligibility; Technical Correction.
01/19/93 (58 FR 4908)	435, 436, 440	Medicaid Program; Eligibility and Coverage Requirements.
01/19/93 (58 FR 5212)	493	Medicare, Medicaid and CLIA Programs; CLIA Program Fee Collection; Correction.
01/19/93 (58 FR 5215)	493	Medicare, Medicaid and CLIA Programs; Regulations Implementing the Clinical Laboratory Improvement Amendments of 1988 (CLIA) and Clinical Laboratory Improvement Act Program Fee Collection.

Publication date/Citation	Title
Notices:	
01/06/93 (58 FR 630)	Medicare Program; Inpatient Hospital Deductible and Hospital and Extended Care Services Coinsurance Amounts for 1993 (Correction).
01/07/93 (58 FR 2989)	Medicare and State Health Care Programs, Fraud and Abuse; Safe Harbors for Protecting Health Plans—Extension of Comment Period.
01/07/93 (58 FR 3028)	Medicare and Medicaid Programs; Quarterly Listing of Program Issuances and Coverage Decisions—Third Quarter 1992.
01/15/93 (58 FR 4705)	Medicare Program; Uniform Hospital Billing and Payment Mechanisms.
01/21/93 (58 FR 5402)	Health Maintenance Organizations; HMO Qualification Determinations and Compliance Actions.
01/22/93 (58 FR 5617)	Health Care Programs; Fraud and Abuse; Amendments to OIG Exclusion and CMP Authorities Resulting From Public Law 100–93.
01/26/93 (58 FR 6095)	Medicaid Program; Limitations on Provider-Related Donations and Health Care-Related Taxes; Limitations on Payments to Disproportionate Share Hospitals; Correction.
02/12/93 (58 FR 8291)	Medicare Program; Meeting of the Practicing Physicians Advisory Council.
02/16/93 (58 FR 8568)	Medicare and Medicaid Programs; Requirements for Physician Incentive Plans in Prepaid Health Care Organizations.
02/19/93 (58 FR 9120)	Medicaid Program; Eligibility and Coverage Requirements.
02/19/93 (58 FR 9244)	Medicare and Medicaid Programs; Quarterly Listing of Program Issuances and Coverage Decisions (Correction).

Publication date/Citation	Title
03/02/93 (58 FR 12042)	Medicare Program; Peer Review Organizations: New PRO Contracts for All States and Territories and the District of Columbia.
03/31/93 (58 FR 16837)	Medicare and Medicaid Programs; Quarterly Listing of Program Issuances and Coverage Decisions—Fourth Quarter 1992.

[FR Doc. 93–21243 Filed 8–31–93; 8:45 am]
BILLING CODE 4120–01–P

National Institutes of Health

National Institute on Aging; Amended Notice of Meeting of the National Advisory Council on Aging

Notice is hereby given of a change for the meeting of the National Advisory Council on Aging, National Institute on Aging, September 29–30, 1993, to be held at the National Institutes of Health, Building 31, Conference Room 10, Bethesda, Maryland published in the Federal Register on August 12 (42978 Vol. 58, No. 154). This meeting was scheduled to be open to the public on Wednesday, September 29 from 8 until 12 noon and again on Thursday, September 30 from 8:30 a.m. until adjournment. The meeting was scheduled to be closed on Wednesday, September 29 from 1 to 3:30 p.m.

The meeting will now be open to the public on Wednesday, September 29, from 8 to 9:30 a.m. and again from 1 p.m. until recess and again on Thursday, September 30 from 8 a.m. until adjournment. The closed portion of the meeting will take place on Wednesday, September 29 from 9:30 a.m. to 12 noon.

Dated: August 26, 1993.

Susan K. Feldman,

Committee Management Officer, NIH.

[FR Doc. 93–21308 Filed 8–31–93; 8:45 am]
BILLING CODE 4140–01–M

National Heart, Lung, and Blood Institute; Meeting of Research Training Review Committee

Pursuant to Public Law 92–463, notice is hereby given of the meeting of the Research Training Review Committee, National Heart, Lung, and Blood Institute, National Institutes of Health, on October 3–5, 1993, at the Holiday Inn Bethesda, 8120 Wisconsin Avenue, Bethesda, Maryland 20814.

This meeting will be open to the public on October 3, from 7:30 p.m. to approximately 8:30 p.m., to discuss administrative details and to hear reports concerning the current status of the National Heart, Lung, and Blood Institute. Attendance by the public is limited to space available.

In accordance with provisions set forth in secs. 552b(c)(4) and 552b(c)(6), title 5, U.S.C., and sec. 10(d) of Public Law 92–463, the meeting will be closed to the public on October 3, from 8:30 p.m. to adjournment on October 5, for the review, discussion, and evaluation of individual grant applications. These applications and the discussions could reveal confidential trade secrets or commercial property such as patentable material and personal information concerning individuals associated with the applications, the disclosure of which would constitute a clearly unwarranted invasion of personal privacy.

Terry Long, Chief, Communications and Public Information Branch, National Heart, Lung, and Blood Institute, Building 31, room 4A21, National Institutes of Health, Bethesda, Maryland 20892, (301) 496–4236, will provide a summary of the meeting and a roster of the Committee members.

Individuals who plan to attend and need special assistance, such as sign language interpretations or other reasonable accommodations, should contact the Scientific Review Administrator in advance of the meeting.

Dr. Kathryn Ballard, Scientific Review Administrator, NHLBI, Westwood Building, room 550, Bethesda, Maryland 20892, (301) 594–7450, will furnish substantive program information.

(Catalog of Federal Domestic Assistance Program Nos. 93.837, Heart and Vascular Diseases Research; 93.838, Lung Diseases Research; and 93.839, Blood Diseases and Resources Research, National Institutes of Health.)

Dated: August 26, 1993.

Susan K. Feldman,

Committee Management Officer, NIH.

[FR Doc. 93–21306 Filed 8–31–93; 8:45 am]
BILLING CODE 4140–01–M

National Heart, Lung, and Blood Institute; Meeting of the National Heart, Lung, and Blood Advisory Council and its Research Subcommittee and Training Subcommittee

Pursuant to Public 92–463, notice is hereby given of the meeting of the National Heart, Lung, and Blood Advisory Council, National Heart, Lung, and Blood Institute, October 21–22, 1993, National Institutes of Health, 9000 Rockville Pike, Building 31, Conference Room 10, Bethesda, Maryland 20892. In addition, the Research Subcommittee and the Training Subcommittee of the above Council will meet together on October 20, at the Marriott Hotel, Bethesda, Maryland.

The Council meeting will be open to the public on October 21 from 9 a.m. to approximately 3:30 p.m. for discussion of program policies and issues. Attendance by the public is limited to space available.

In accordance with the provisions set forth in sections 552b(c)(4) and 552b(c)(6), title 5, U.S.C., section 10(d) of Public Law 92–463, the Council meeting will be closed to the public from approximately 3:30 p.m. to recess on October 21 and from 8:30 a.m. to adjournment on October 22 for the review, discussion and evaluation of individual grant applications. The meetings of the Research Subcommittee and the Training Subcommittee of the above Council on October 20, will be closed from 7 p.m. to adjournment for the review, discussion, and evaluation of individual grant applications. These applications and the discussions could reveal confidential trade secrets or commercial property such as patentable material, and personal information concerning individuals associated with the applications, the disclosure of which would constitute a clearly unwarranted invasion of personal privacy.

Ms. Terry Long, Chief, Communications and Public Information Branch, National Heart, Lung, and Blood Institute, Building 31, room 4A21, National Institutes of Health, Bethesda, Maryland 20892, (301) 496–4236, will provide a summary of the meetings and a roster of the Council members.

Individuals who plan to attend and need special assistance, such as sign language interpretation or other reasonable accommodations, should contact the Executive Secretary in advance of the meeting.

Dr. Ronald G. Geller, Executive Secretary, National Heart, Lung, and Blood Advisory Council, Westwood Building, room 7A–17, National Institutes of Health, Bethesda, Maryland

20892, (301) 594–7454, will furnish substantive program information.

(Catalog of Federal Domestic Assistance Program Nos. 93.837, Heart and Vascular Diseases Research; 93.838, Lung Diseases Research; and 93.839, Blood Diseases and Resources Research, National Institutes of Health.)

Dated: August 26, 1993.

Susan K. Feldman,

Committee Management Officer, NIH.

[FR Doc. 93–21307 Filed 8–31–93; 8:45 am]

BILLING CODE 4140–01–M

DEPARTMENT OF HOUSING AND URBAN DEVELOPMENT

Office of the Assistant Secretaries for Public and Indian Housing, Community Planning and Development, and Housing-Federal Housing Commissioner

[Docket Nos. N–93–3636; FR–3501–N–02, N–93–3628; FR–3353–N–02, N–93–3611; FR–3490–N–03]

Fund Availability for HOPE for Public and Indian Housing Homeownership Program (HOPE 1); HOPE for Homeownership of Multifamily Units (HOPE 2); and HOPE for Homeownership of Single Family Homes (HOPE 3)

AGENCY: Offices of the Assistant Secretaries for Public and Indian Housing, Community Planning and Development, and Housing-Federal Housing Commissioner, HUD.

ACTION: Notices of fund availability for the HOPE 1, 2, and 3 Programs for FY 1993; amendments.

SUMMARY: This Notice announces an increase in the amount of funds available for implementation grants under 1993 NOFAs published previously for the following programs: HOPE for Public and Indian Housing Homeownership Program (HOPE 1), HOPE for Homeownership of Multifamily Units (HOPE 2), and HOPE for Homeownership of Single Family Homes (HOPE 3) programs.

DATES: Application due dates for each program are the same as announced in the previously published NOFAs.

FOR FURTHER INFORMATION CONTACT: Department of Housing and Urban Development, 451 Seventh Street SW., Washington, DC 20410: (HOPE 1) Gary Van Buskirk, Office of Resident Initiatives, room 4112, telephone (202) 708–4233; (HOPE 2) Margaret Milner, Office of Resident Initiatives, room 6130, telephone (202) 708–4542; and (HOPE 3) John Garrity, HOPE 3 Division, room 7158, telephone (202) 708–0324. To provide service for persons who are hearing- or speech-impaired, these numbers may be reached via TDD by dialing the Federal Information Relay Service on 1–800–877–TDDY, 1–800–877–8339, or 202–708–9300. (Telephone numbers, other than "800" TDD numbers, are not toll-free.)

SUPPLEMENTARY INFORMATION:

I. Purpose and Substantive Description

Earlier this year, the Department published three NOFAs announcing the availability of funding for implementation grants as follows: $182,047,160 for the HOPE for Public and Indian Housing Homeownership Program (HOPE 1) published August 2, 1993 (58 FR 41126); $102,200,000 for the HOPE for Multifamily Homeownership Program (HOPE 2) published July 16, 1993 (58 FR 38466); and $86,000,000 for the HOPE for Single Family Homeownership Program (HOPE 3) published July 7, 1993 (58 FR 36546). These funds were appropriated by the Departments of Veterans Affairs and Housing and Urban Development, and Independent Agencies Appropriation Acts for fiscal years 1992 and 1993. The Department did not include funds for planning grants ($24 million for HOPE 1; $5 million for HOPE 2; and $7 million for HOPE 3) in the HOPE NOFAs because those funds were under consideration for reprogramming in order to fund a larger number of implementation grants. The Department has concluded its processing of the reprogramming and is now making those funds available for implementation grants through this Notice.

Accordingly, the HOPE 1 NOFA is amended to increase the amount available by $24 million from $182,047,160 to $206,047,160; the HOPE 2 NOFA is amended to increase the amount available by $5 million from $102,200,000 to $107,200,000; and the HOPE 3 NOFA is amended to increase the amount available by $7 million from $86,000,000 to $93,000,000.

In addition, under the HOPE 3 final rule at 24 CFR 572.210(b), which was published in conjunction with the HOPE 3 NOFA, the amount made available for implementation grants has been allocated to each of the 10 HUD Regions by a formula. However, no Region will be allocated less than $4 million in order to ensure that national geographic diversity is maintained. The increased funding available results in the following revised allocation by HUD Region for FY 1993:

Region I	$4,020,000
Region II	9,771,000
Region III	8,586,000
Region IV	17,255,000
Region V	14,579,000
Region VI	14,208,000
Region VII	4,000,000
Region VIII	4,000,000
Region IX	12,581,000
Region X	4,000,000

Readers should refer to the NOFAs (publication dates and citations listed above) for other information concerning applications for funding under the HOPE programs. No information contained in those NOFAs, other than the amounts available, is changed by this Notice.

Dated: August 26, 1993.

Joseph Shuldiner,

Assistant Secretary for Public and Indian Housing.

Andrew Cuomo,

Assistant Secretary for Community Planning and Development.

Jeanne K. Engel,

General Deputy Assistant Secretary for Housing-Federal Housing Commissioner.

[FR Doc. 93–21296 Filed 8–31–93; 8:45 am]

BILLING CODE 4210–32–M

Office of the Secretary—Office of Lead-Based Paint Abatement and Poisoning Prevention

[Docket No. N–93–3447; FR–3253–N–02]

NOFA for Lead-Based Paint Abatement in Low- and Moderate-Income Private Housing: Announcement of Funding Awards

AGENCY: Office of the Secretary—Office of Lead-Based Paint Abatement and Poisoning Prevention, HUD.

ACTION: Announcement of funding awards.

SUMMARY: In accordance with section 102(a)(4)(C) of the Department of Housing and Urban Development Reform Act of 1989, this announcement notifies the public of funding decisions made by the Department in a competition for funding under the NOFA for Lead-Based Paint Abatement in Low- and Moderate-Income Private Housing. The announcement contains the names and addresses of the award winners and the amounts of awards.

FOR FURTHER INFORMATION CONTACT: Ellis G. Goldman, Department of Housing and Urban Development, 451 Seventh Street SW., Washington, DC 20410, telephone (202) 755–1822, ext. 112. The TDD number for the hearing impaired is (202) 708–9300 (not a toll-free number), or 1–800–877–8339.

SUPPLEMENTARY INFORMATION: The purpose of the competition was to award grant funding for approximately $47,700,000 for the grant program for lead-based paint abatement in low- and moderate-income private housing.

The 1993 awards announced in this Notice were selected for funding in a competition announced in a **Federal Register** notice published on Monday, July 6, 1992 (57 FR 29774). Applications were scored and selected for funding on the basis of selection criteria contained in that Notice.

A total of $25,537,820 already has been awarded to five grantees. An additional five grants currently are being negotiated and will be announced in a subsequent **Federal Register** notice. In accordance with section 102(a)(4)(C) of the Department of Housing and Urban Development Reform Act of 1989 (Pub. L. 101–235, approved December 15, 1989), the Department is publishing the names, addresses, and amounts of those awards as follows:

NOFA FOR LEAD-BASED PAINT ABATEMENT IN LOW- AND MODERATE-INCOME PRIVATE HOUSING

Baltimore City Health Department, 303 E. Fayette Street, Baltimore, MD 21202	$5,710,451
State of California, Department of Economic Opportunity, 700 North Tenth Street, room 272, Sacramento, CA 95814	6,000,000
State of Rhode Island, Department of Health, 206 Cannon Building, Three Capitol Hill, Providence, RI 20908–5097	3,943,028
City of Cleveland, Department of Public Health, 1925 St. Clair Avenue, Cleveland, OH 44114	3,884,341
Commonwealth of Massachusetts, Executive Office of Communities and Development, 100 Cambridge Street, 18th Floor, Boston, MA 02202	6,000,000

Dated: August 25, 1993.

Arthur S. Newburg,

Director, Office of Lead-Based Paint Abatement and Poisoning Prevention.

[FR Doc. 93–21296 Filed 8–31–93; 8:45 am]

BILLING CODE 4210–32 M

DEPARTMENT OF THE INTERIOR

Bureau of Land Management

[OR–100–6321–01; G–3–360; Case File #OR–49268]

Environmental Assessment; Notice of Realty Action; Exchange of Public Lands

AGENCY: Bureau of Land Management, DOI.

ACTION: Notice of Availability, Environmental Assessment; Notice of Realty Action, Exchange of Public Lands.

SUMMARY: The Bureau of Land Management (BLM) in the State of Oregon, Douglas County, Roseburg District, has completed an environmental assessment (EA) and draft Finding of No Significant Impact (FONSI) for a proposed amendment to the North Umpqua Resource Area and Drain Resource Area Management Framework Plans (MFPs). The purpose of the plan amendments is to make available for exchange certain public lands managed by the BLM in Douglas County, Oregon. The MFP amendments will facilitate the Dunning Ranch exchange proposed by 2Linc., an Oregon corporation. Under the exchange proposal, up to 360 acres of revested Oregon and California (O & C) timber land would be exchanged for an approximately 6,600 acre ranch. With this publication in the **Federal Register**, the public is hereby notified of the availability of the proposed plan amendment EA and draft FONSI for review and comment.

DATES: Comments are due on or before November 1, 1993.

ADDRESSES: Bureau of Land Management, Roseburg District Office, 777 NW Garden Valley Blvd., Roseburg, OR 97470, Phone: (503) 440–4930.

FOR FURTHER INFORMATION CONTACT: Eileen Cotnam, BLM Realty Specialist (503) 440–4930. Copies of the EA and FONSI are available from the BLM at the address above.

SUPPLEMENTARY INFORMATION: Publication of this Notice Of Availability and Notice of Realty Action in the **Federal Register** is in conformance with regulations published in 43 CFR 1610.2 and 1610.3 and 43 CFR 2201.1.

Public lands proposed for exchange and private parcels offered in exchange were identified in a previous Notice of Realty Action published in the **Federal Register** (FR Doc. 93–5600, March 19, 1993, page 15160). Contingent upon approval of the amended MFPs, the described public lands will be in conformance with the approved land use plans and, therefore, suitable for disposal by exchange under section 206 of the Federal Land Policy and Management Act of 1976 (FLPMA), 43 U.S.C. 1716.

The parcels being proposed for disposal are generally considered to be isolated and difficult to manage. These public lands are classified as suitable habitat for the Northern Spotted Owl (NSO), a Federally listed threatened species. No known NSO nesting sites occur within any exchange parcels. The public land parcels are also within the known distribution of the Columbian White-tailed Deer (CWTD), a Federally listed Endangered species.

The parcels identified for acquisition through the exchange process are considered to contain high public values including recreation, wetlands, wildlife, and special status plants. In particular, the 6,600 acre ranch has been classified as suitable CWTD habitat. If this land is secured (i.e. owned, controlled, protected, or otherwise dedicated to the conservation of CWTD), and other secure habitat is considered, the land base and habitat requirements set forth in the CWTD Recovery Plan would be met and the species may move towards being removed from endangered species status. The offered private parcels also contain important special status plant habitat (plant species with potential for listing as a threatened or endangered species).

The value of lands proposed for exchange have not been determined. As required by BLM regulation, the exchange values shall be fair market value as determined by appraisal. In the event appraised values are not equal, the exchange values would be equalized by a cash payment to the United States in an amount not to exceed twenty-five percent (25%) of the value of the public lands, or by deleting a parcel or parcels or a combination of both.

Public lands would be transferred subject to: (1) The reservation to the United States of a right-of-way for ditches or canals constructed by the authority of the United States under the Act of August 30, 1890 (43 U.S.C. 945); and (2) all valid existing easements, leases, permits, licenses, or other rights of record.

Formal consultation with the US Fish and Wildlife Service, a cooperating agency, concerning impacts to the Northern Spotted Owl, Marbled Murrelet, and Columbian White-tailed Deer is ongoing.

The EA analyzes the plan amendment and three alternatives (No Action,

Proposed Action, and Maximum Protection) for the proposed exchange.

The No Action Alternative would result in continuation of the existing situation. Under this alternative, none of the public lands would pass out of public ownership, and the private lands would not be acquired for the protection of CWTD habitat.

Under the Proposed Action, the Federal Government would acquire the surface and mineral estate of the offered private parcels in exchange for the surface and mineral estate of all or a portion of the selected public lands. The land obtained through this exchange would be managed for CWTD habitat and protection of special status plants. The acquired parcels would also be designated an "Area of Critical Environmental Concern", as identified in section 202 (c)(3) of the Federal Land Policy Management Act, except for up to 360 acres which would be managed primarily for timber production. The Proposed Action also identifies management prescriptions and restrictions which would be followed for the acquired lands.

The Maximum Protection Alternative would be similar to the proposed action except for the utilization of maximum discretionary authorities to protect or restrict any potential threat to the habitat. This alternative would include a "No Surface Occupancy" stipulation for energy and mineral resources, no livestock grazing, no vegetative product sales, no motorized or mechanized recreation, and no developed trails.

The BLM is inviting comments on the EA for the proposed land use plan amendments and the proposed exchange. Comments may be addressed to Gail Schaefer, BLM Resource Area Manager, at the Roseburg District Office. Comments should be submitted by November 1, 1993.

No public meetings are planned for this exchange proposal at this time. Potential need for public meetings will be evaluated based on the level of public input as a result of public notification procedures. Any public meetings will be announced at least 15 days in advance.

A proposed decision on the proposed exchange will be published later this summer and mailed to known interested parties. It will also be announced to local media and published in the **Federal Register**.

Dated: August 13, 1993.

James Moorhouse,

District Manager.

[FR Doc. 93–20378 Filed 8–31–93; 8:45 am]

BILLING CODE 4310–33–M

[MT–920–03–4110–03, MTM 76350]

Notice of Proposed Reinstatement of Terminated Oil and Gas Lease

Under the provisions of Public Law 97–451, a petition for reinstatement of oil and gas lease MTM 76350, Daniels County, Montana, was timely filed and accompanied by the required rental accruing from the date of termination.

No valid lease has been issued affecting the lands. The lessee has agreed to new lease terms for rentals and royalties at rates of $5 per acre and 16⅔% respectively. Payment of a $500 administration fee has been made.

Having met all the requirements for reinstatement of the lease as set out in Sec. 31(d) and (e) of the Mineral Lands Leasing Act of 1920 (30 U.S.C. 188), the Bureau of Land Management is proposing to reinstate the lease, effective as of the date of termination, subject to the original terms and conditions of the lease, the increased rental and royalty rates cited above, and reimbursement for cost of publication of this Notice.

Dated: August 23, 1993.

Cynthia L. Embretson,

Chief, Fluids Adjudication Section.

[FR Doc. 93–21177 Filed 8–31–93; 8:45 am]

BILLING CODE 4310–DN–M

[CO–010–03–4330–02]

Temporary Travel Restrictions for the Fourmile Creek and Serviceberry Mountain Areas of Colorado

AGENCY: Little Snake Resource Area, Bureau of Land Management, DOI.

ACTION: Order of area, road and trail use restriction.

SUMMARY: This order closes certain public lands to motorized vehicle use except snowmobiles in the Fourmile Creek area and closes certain public lands to motor vehicle use except for all-terrain-vehicles and snowmobiles in the vicinity of Serviceberry Mountain areas in the Little Snake Resource Area, Craig District. This order modifies the existing Off Highway Vehicle (OHV) use "Open" designation on 4,600 acres. This order is issued under the authority of 43 CFR 8364.1 and 43 CFR 834.2(s) as a temporary measure while the off-highway vehicle (OHV) management portion of the Little Snake Resource Area, Resource Management Plan is reviewed and modified as needed to address public issues, concerns and needs, as well as resource uses, development, impacts and protection.

This order affects public lands in Moffat County thus described:

(1) Fourmile Creek area:

(A) The state school lands under easement to the BLM within:

T 11N, R 91W
Sec. 36 (east of fence adjacent to Moffat County Road 101)

(B) Public lands within:

T 11N, R 90W
Sec. 29, Lot 15
Sec. 31
Sec. 32
T 10N, R 90W
Sec. 5
Sec. 6
Sec. 7

(2) Public lands in the Serviceberry Mountain Area within:

T 12N, R 90W
Sec. 21, Lot 16 (south of the fence line)
Sec. 27
Sec. 28
Sec. 29
Sec. 32
Sec. 33
Sec. 34
T 11N, R 90W
Sec. 3

EFFECTIVE DATES: This restriction order shall be effective September 7, 1993, and shall remain in effect until rescinded or modified by the Authorized Officer.

SUPPLEMENTARY INFORMATION: Current OHV use designations for public lands in the area, established in the Little Snake Resource Area Resource Manage Plan, 1989, allow motorized vehicle use on and off the roads and trails year round. State and local agencies and neighboring landowners expressed concerns that the two easements would open the Serviceberry Mountain and Fourmile Creek to motorized traffic (consistent with the concurrent RMP travel management designation) and cause unacceptable impacts to natural resources, especially wildlife and soils.

The affected public lands includes identified soil erosion hazard and important high quality big game habitat. The public lands are neighbored by private lands and in many places the boundaries are not marked or otherwise identified, thus creating potential trespass situations. The area also contains several grazing allotments which at times require motorized vehicle access by the permittee for maintenance or range facilities. Given due consideration of the concerns expressed by the public and the potential impacts of unrestricted motorized vehicle use, a modification of existing OHV use designations is necessary to adequately protect natural resources on public land, minimize conflicts with other uses, prevent trespass problems, and ensure public

safety until these issues can be more thoroughly addressed in activity planning for these areas. Provisions will be made to allow for necessary motorized travel on the public lands for administrative purposes and to facilitate non-motorized public access to the public lands at Fourmile Creek and non-motorized and ATV access to the public lands at Serviceberry Mountain. The area, roads, and trails affected by this order will be posted with appropriate regulatory signs. Information, including detailed maps of the restricted area, roads and trails will be available at the access sites and in the Resource Area Office and District Office at the addresses shown below.

Persons who are exempt from the restrictions contained in this notice include:

1. Any Federal, State, or local officers engaged in fire, emergency and law enforcement activities.

2. BLM employees engaged in official duties.

3. Persons or agencies holding a valid permit or right of way on or across the restricted public land for access to private land, for purposes related to the access of private land on said easement only.

4. Persons or agencies holding a special use permit or right of way for access to maintenance and operations of authorized facilities within the restricted area, for purposes related to access for maintenance and operation of said authorized facilities, and provided such motorized use is limited to the routes specifically identified in the special use permit or right of way.

5. Grazing permittees authorized during the permitted grazing season for grazing related purposes provided such motorized use is limited to existing roads and trails and subject to any additional conditions in the grazing permit. Any motorized use before or after the permitted grazing season necessary for maintenance and operation of range facilities shall require advance approval by the authorized officer specifically authorizing such use and subject to whatever restrictions are deemed necessary.

Penalties

Violations of this restriction order are punishable by fines not to exceed $1,000 and/or imprisonment not to exceed 12 months.

FOR FURTHER INFORMATION CONTACT:

John Husband, Area Manager, Little Snake Resource Area, 1280 Industrial Avenue, Craig, Colorado 81625, (303) 824–4441

Bill Pulford, District Manager, Craig District Office, 455 Emerson Street, Craig, Colorado 81625–1129, Phone: (303) 824–8261

Dated: August 26, 1993.

Robert W. Schneider,

Associate District Manager.

[FR Doc. 93–21227 Filed 8–31–93; 8:45 am]

BILLING CODE 4310–JB–M

Fish and Wildlife Service

Receipt of Applications for Permit

The following applicants have applied for a permit to conduct certain activities with endangered species. This notice is provided pursuant to section 10(c) of the Endangered Species Act of 1973, *as amended* (16 U.S.C. 1531, *et seq.*):

PRT–782300

Applicant: Zoological Society of San Diego, San Diego, CA

The applicant requests a permit to import one captive-born male Bactrian deer (*Cervus elaphus bactrianus*) from Tallinn Zoological Gardens, Tallinn, Estonia, for the purpose of enhancement of propagation and survival of the species.

PRT–781819

Applicant: Robert Case, Jackson, MS

The applicant requests a permit to import the sport-hunted trophy of one male bontebok (*Damaliscus dorcas dorcas*) culled from the captive herd maintained by Mr. M.J. D'Alton, "Kosierskraal", Bredasdorp, Republic of South Africa, for the purpose of enhancement of survival of the species.

PRT–782298

Applicant: Jackson Zoological Park, Jackson, MS

The applicant requests a permit to export one captive-born male clouded leopard (*Neofelis nebulosa*) to Howletts & Port Lympne Wild Animal Parks, United Kingdom, for the purpose of enhancement of propagation and survival of the species.

PRT–781550

Applicant: Point Defiance Zoo & Aquarium, Tacoma, WA

The applicant requests a permit to export one captive-born male siamang (*Hylobates syndactylus*) to Jardin Zoologique Du Quebec, Quebec, Canada for the purpose of enhancement of propagation and survival of the species.

PRT–781895

Applicant: Metro Washington Park Zoo, Portland, OR

The applicant requests a permit to import eight pair of captive-born fruit bats (*Pteropus rodricensis*) from Black River Aviaries, River Noire, Mauritius, and the Royal Zoological Society of Ireland, Dublin, Ireland, for the purpose of enhancement of propagation and survival of the species.

PRT–781822

Applicant: William Hardy, Franklin Lakes, NJ

The applicant requests a permit to import up to 150 blood samples collected from cheetahs (*Acinonyx jubatus*) in Botswana during a predator trapping and relocation program. Samples will be used for scientific research.

Written data or comments should be submitted to the Director, U.S. Fish and Wildlife Service, Office of Management Authority, 4401 North Fairfax Drive, room 432, Arlington, Virginia 22203 and must be received by the Director within 30 days of the date of this publication.

Documents and other information submitted with these applications are available for review by any party who submits a written request for a copy of such documents to the following office within 30 days of the date of publication of this notice: U.S. Fish and Wildlife Service, Office of Management Authority, 4401 North Fairfax Drive, room 432, Arlington, Virginia 22203. Phone: (703/358–2104); FAX: (703/358–2281).

Dated: August 27, 1993.

Susan Jacobsen,

Acting Chief, Branch of Permits, Office of Management Authority.

[FR Doc. 93–21297 Filed 8–31–93; 8:45 am]

BILLING CODE 4310–55–M

INTERNATIONAL TRADE COMMISSION

[Investigations Nos. 731–TA–639 and 640 (Final)]

Stainless Steel Flanges From India and Taiwan

AGENCY: United States International Trade Commission.

ACTION: Institution and scheduling of final antidumping investigations.

SUMMARY: The Commission hereby gives notice of the institution of final antidumping investigations Nos. 731–TA–639 and 640 (Final) under section 735(b) of the Tariff Act of 1930 (19 U.S.C. 1673d(b)) (the Act) to determine whether an industry in the United States is materially injured, or is threatened with material injury, or the establishment of an industry in the United States is materially retarded, by reason of imports from India and Taiwan of stainless steel flanges,[1]

[1] The imported products covered by these investigations (as defined by the U.S. Department

provided for in subheadings 7307.21.10 and 7307.21.50 of the Harmonized Tariff Schedule of the United States, that have been preliminarily found, by the U.S. Department of Commerce, to be sold in the United States at less than fair value. The Commission must complete final antidumping investigations no later than 45 days from Commerce's final determinations, or in this case by February 2, 1994.

For further information concerning the conduct of these investigations, hearing procedures, and rules of general application, consult the Commission's Rules of Practice and Procedure, part 201, subparts A through E (19 CFR part 201), and part 207, subparts A and C (19 CFR part 207).

EFFECTIVE DATE: August 2, 1993.

FOR FURTHER INFORMATION CONTACT: Fred Ruggles (202–205–3187), Office of Investigations, U.S. International Trade Commission, 500 E Street SW., Washington, DC 20436. Hearing-impaired persons can obtain information on this matter by contacting the Commission's TDD terminal on 202–205–1810. Persons with mobility impairments who will need special assistance in gaining access to the Commission should contact the Office of the Secretary at 202–205–2000.

SUPPLEMENTARY INFORMATION:

Background

These investigations are being instituted as a result of affirmative preliminary determinations by the Department of Commerce that imports of certain stainless steel flanges from India and Taiwan are being sold in the United States at less than fair value within the meaning of section 733 of the Act (19 U.S.C. 1673b). The investigations were requested in a petition filed on December 31, 1992, by Flowline Division, Markovitz Enterprises, Inc., New Castle, PA; Gerlin, Inc., Carol Stream, IL; Ideal Forging Corp., Southington, CT; and Maass Flange Corp., Houston, TX.

of Commerce) are certain forged stainless steel flanges, both finished and unfinished, generally manufactured to specification ASTM A–182, and made in alloys such as 304, 304L, 316, and 316L. The scope includes five general types of flanges. They are weld neck, used for butt-weld line connections; threaded, used for threaded line connections; slip-on and lap joint, used with stub ends/butt-weld line connections; socket weld, used to fit pipe into a machined recession; and blind, used to seal off a line. The sizes of the flanges within the scope range generally from one to six inches; however, all sizes of the above-described merchandise are included in the scope. Specifically excluded from the scope of this investigation are cast stainless steel flanges. Cast stainless steel flanges generally are manufactured to specification ASTM–351.

Participation in the Investigation and Public Service List

Persons (other than petitioners) wishing to participate in the investigations as parties must file an entry of appearance with the Secretary to the Commission, as provided in § 201.11 of the Commission's rules, not later than twenty-one (21) days after publication of this notice in the **Federal Register**. The Secretary will prepare a public service list containing the names and addresses of all persons, or their representatives, who are parties to these investigations upon the expiration of the period for filing entries of appearance.

Limited Disclosure of Business Proprietary Information (BPI) Under an Administrative Protective Order (APO) and BPI Service List

Pursuant to § 207.7(a) of the Commission's rules, the Secretary will make BPI gathered in these final investigations available to authorized applicants under the APO issued in the investigations, provided that the application is made not later than twenty-one (21) days after the publication of this notice in the **Federal Register**. A separate service list will be maintained by the Secretary for those parties authorized to receive BPI under the APO.

Staff Report

The prehearing staff report in these investigations will be placed in the nonpublic record on December 8, 1993, and a public version will be issued thereafter, pursuant to § 207.21 of the Commission's rules.

Hearing

The Commission will hold a hearing in connection with these investigations beginning at 9:30 a.m. on December 22, 1993, at the U.S. International Trade Commission Building. Requests to appear at the hearing should be filed in writing with the Secretary to the Commission on or before December 15, 1993. A nonparty who has testimony that may aid the Commission's deliberations may request permission to present a short statement at the hearing. All parties and nonparties desiring to appear at the hearing and make oral presentations should attend a prehearing conference to be held at 9:30 a.m. on December 17, 1993, at the U.S. International Trade Commission Building. Oral testimony and written materials to be submitted at the public hearing are governed by §§ 201.6(b)(2), 201.13(f), and 207.23(b) of the Commission's rules. Parties are strongly encouraged to submit as early in the investigations as possible any requests to present a portion of their hearing testimony *in camera*.

Written Submissions

Each party is encouraged to submit a prehearing brief to the Commission. Prehearing briefs must conform with the provisions of § 207.22 of the Commission's rules; the deadline for filing is December 16, 1993. Parties may also file written testimony in connection with their presentation at the hearing, as provided in § 207.23(b) of the Commission's rules, and posthearing briefs, which must conform with the provisions of § 207.24 of the Commission's rules. The deadline for filing posthearing briefs is January 4, 1994; witness testimony must be filed no later than three (3) days before the hearing. In addition, any person who has not entered an appearance as a party to the investigations may submit a written statement of information pertinent to the subject of the investigations on or before January 4. All written submissions must conform with the provisions of § 201.8 of the Commission's rules; any submissions that contain BPI must also conform with the requirements of §§ 201.6, 207.3, and 207.7 of the Commission's rules.

In accordance with §§ 201.16(c) and 207.3 of the rules, each document filed by a party to the investigations must be served on all other parties to the investigations (as identified by either the public or BPI service list), and a certificate of service must be timely filed. The Secretary will not accept a document for filing without a certificate of service.

Authority: These investigations are being conducted under authority of the Tariff Act of 1930, title VII. This notice is published pursuant to § 207.20 of the Commission's rules.

By order of the Commission.

Issued: August 26, 1993.

Donna R. Koehnke,

Secretary.

[FR Doc. 93–21273 Filed 8–31–93; 8:45 am]

BILLING CODE 8010–01–M

[Investigation No. 337–TA–356]

Certain Integrated Circuit Devices, Processes for Making Same, Components Thereof, and Products Containing Same; Investigation

AGENCY: U.S. International Trade Commission.

ACTION: Institution of investigation pursuant to 19 U.S.C. 1337.

SUMMARY: Notice is hereby given that a complaint was filed with the U.S.

International Trade Commission on July 26, 1993, under section 337 of the Tariff Act of 1930, as amended, 19 U.S.C. 1337, on behalf of National Semiconductor Corporation, 2900 Semiconductor Drive, P.O. Box 58090, M/S 16–135, Santa Clara, California 95051, and Fairchild Semiconductor Corporation, 2900 Semiconductor Drive, P.O. Box 58090, M/S 16–135, Santa Clara, California 95051. A supplement to the complaint was filed on August 11, 1993.

The complaint, as supplemented, alleges violations of section 337 in the importation into the United States, the sale for importation, and the sale within the United States after importation of certain integrated circuit devices that have been processed abroad by a method covered by claim 2 of U.S. Letters Patent 4,325,984 or that infringe claims 1, 2, 3, 4, 5, 10, 11, 13, 14, 15, and 18 of U.S. Letters Patent 4,538,247, claims 5 and 8 of U.S. Letters Patent 4,346,351, claims 1, 2, and 3 of U.S. Letters Patent 4,075,509, claims 1, 2, 4, 8, 9, and 10 of U.S. Letters Patent 4,567,580, claim 1 of U.S. Letters Patent 4,238,839, and claims 4, 6, and 7 of U.S. Letters Patent 4,191,900, and that there exists an industry in the United States as required by subsection (a)(2) of section 337.

The complainants request that the Commission institute an investigation and, after a hearing, issue a permanent exclusion order and permanent cease and desist orders.

ADDRESSES: The complaint, except for any confidential information contained therein, is available for inspection during official business hours (8:45 a.m. to 5:15 p.m.) in the Office of the Secretary, U.S. International Trade Commission, 500 E Street, SW., room 112, Washington, DC 20436, telephone 202–205–1802. Hearing-impaired individuals are advised that information on this matter can be obtained by contacting the Commission's TDD terminal on 202–205–1810.

FOR FURTHER INFORMATION CONTACT: Thomas L. Jarvis, Esq. (202–205–2568) or Mary Jane Boswell, Esq. (202–205–2582), Office of Unfair Import Investigations, U.S. International Trade Commission.

Authority: The authority for institution of this investigation is contained in section 337 of the Tariff Act of 1930, as amended, and in § 210.12 of the Commission's Interim Rules of Practice and Procedure, 19 CFR 210.12.

Scope of Investigation: Having considered the complaint, the U.S. International Trade Commission, on August 25, 1993, ordered that—

(1) Pursuant to subsection (b) of section 337 of the Tariff Act of 1930, as amended, an investigation be instituted to determine:

Whether there is a violation of subsection (a)(1)(B) of section 337 in the importation into the United States, the sale for importation, or the sale within the United States after importation of certain integrated circuit devices, components thereof, or products containing same by reason of alleged infringement of (1) claims 1, 2, 3, 4, 5, 10, 11, 13, 14, 15, or 18 of U.S. Letters Patent 4,538,247, (2) claims 5 or 8 of U.S. Letters Patent 4,346,351, (3) claims 1, 2, or 3 of U.S. Letters Patent 4,075,509, (4) claims 1, 2, 4, 8, 9, or 10 of U.S. Letters Patent 4,567,580, (5) claim 1 of U.S. Letters Patent 4,238,839, (6) claims 4, 6, or 7 of U.S. Letters Patent 4,191,900, or (7) claim 2 of U.S. Letters Patent 4,325,984, and whether there exists an industry in the United States as required by subsection (a)(2) of section 337.

(2) For the purpose of the investigation so instituted, the following are hereby named as parties upon which this notice of investigation shall be served:

(a) The complainants are—

National Semiconductor Corporation, 2900 Semiconductor Drive, P.O. Box 58090, M/S 16–135, Santa Clara, California 95051.
Fairchild Semiconductor Corporation, 2900 Semiconductor Drive, P.O. Box 58090, M/S 16–135, Santa Clara, California 95051.

(b) The respondents are the following companies alleged to be in violation of section 337, and are the parties upon which the complaint is to be served:

Mitsubishi Electric Corporation, Mitsubishi Denki Building 2–3, Marunouchi 2-Chome, Chidyoda-ku, Tokyo 100, Japan.
Mitsubishi Electronics America, Inc., 5665 Plaza Drive, Cypress, California 90630.

(c) Thomas L. Jarvis, Esq. and Mary Jane Boswell, Esq., Office of Unfair Import Investigations, U.S. International Trade Commission, 500 E Street, SW., room 401, Washington, DC 20436, who shall be the Commission investigative attorneys, party to this investigation; and

(3) For the investigation so instituted, Janet D. Saxon, Chief Administrative Law Judge, U.S. International Trade Commission, shall designate the presiding Administrative Law Judge.

Responses to the complaint and the notice of investigation must be submitted by the named respondents in accordance with § 210.21 of the Commission's Interim Rules of Practice and Procedure, 19 CFR 210.21. Pursuant to §§ 201.16(d) and 210.21(a) of the Commission's Rules, 19 CFR 201.16(d) and 210.21(a), such responses will be considered by the Commission if received not later than 20 days after the date of service of the complaint. Extensions of time for submitting responses to the complaint will not be granted unless good cause therefor is shown.

Failure of a respondent to file a timely response to each allegation in the complaint and in this notice may be deemed to constitute a waiver of the right to appear and contest the allegations of the complaint and this notice, and to authorize the administrative law judge and the Commission, without further notice to the respondent, to find the facts to be as alleged in the complaint and this notice and to enter both an initial determination and a final determination containing such findings, and may result in the issuance of a limited exclusion order or a cease and desist order or both directed against such respondent.

Issued: August 26, 1993.

By order of the Commission.

Donna R. Koehnke,

Secretary.

[FR Doc. 93–21274 Filed 8–31–93; 8:45 am]

BILLING CODE 7020–02–P

DEPARTMENT OF JUSTICE

Information Collections Under Review

The Office of Management and Budget (OMB) has been sent the following collection(s) of information proposals for review under the provisions of the Paperwork Reduction Act (44 USC chapter 35) and the Paperwork Reduction Reauthorization Act since the last list was published. Entries are grouped into submission categories, with each entry containing the following information:

(1) The title of the form/collection;

(2) the agency form number, if any, and the applicable component of the Department sponsoring the collection;

(3) how often the form must be filled out or the information is collected;

(4) who will be asked or required to respond, as well as a brief abstract;

(5) an estimate of the total number of respondents and the amount of time estimated for an average respondent to respond;

(6) an estimate of the total public burden (in hours) associated with the collection; and,

(7) an indication as to whether Section 3504(h) of Public Law 96–511 applies.

Comments and/or suggestions regarding the item(s) contained in this notice, especially regarding the estimated public burden and associated response time, should be directed to the OMB reviewer, Mr. Jeff Hill on (202) 395–7340 and to the Department of Justice's Clearance Officer, Mr. Lewis Arnold, on (202) 514–4305. If you anticipate commenting on a form/collection, but find that time to prepare such comments will prevent you from prompt submission, you should notify the OMB reviewer and the DOJ Clearance Officer of your intent as soon as possible. Written comments regarding the burden estimate or any other aspect of the collection may be submitted to Office of Information and Regulatory Affairs, Office of Management and Budget, Washington, DC 20503, and to Mr. Lewis Arnold, DOJ Clearance Officer, SPS/JMD/5031 CAB, Department of Justice, Washington, DC 20530.

New Collections

(1) Telephone Verification System Pilot, Employer Assessment.
(2) G–897. Immigration and Naturalization Service.
(3) One-time response.
(4) Businesses or other for-profit, small businesses or organizations. This assessment will be used to determine the satisfaction of employers who are participating in the Telephone Verification System pilot program. The users of the system are various employers throughout the United States.
(5) 200 annual responses at .166 hours per response.
(6) 33 annual burden hours.
(7) Not applicable under 3504(h).
(1) Nonimmigrant classes; 1, 2, 3, 4, 5, 6, and 7; Control of Employment of Aliens.
(2) No form number. Immigration and Naturalization Service.
(3) On occasion.
(4) Individuals or households, Federal agencies or employees. This Standardized Supporting Letter for NATO Dependent Employment will facilitate applications for employment by dependents of certain principal aliens classified as NATO–1, 2, 3, 4, 5, 6, and 7 nonimmigrants by ensuring that they are given proper consideration.
(5) 125 annual responses at .25 hours per response.
(6) 31.25 annual burden hours.
(7) Not applicable under 3504(h).

Extension of the Expiration Date of a Currently Approved Collection Without Any Change in the Substance or in the Method of Collection

(1) Arrival Information.
(2) Form N–14A. Immigration and Naturalization Service.
(3) On occasion.
(4) Individuals or households. The information obtained through this collection will be used to identify arrival records of aliens applying for benefits. Needed primarily to identify arrival information for arrivals prior to 1924.
(5) 1,000 annual responses at .25 hours per response.
(6) 250 annual burden hours.
(7) Not applicable under 3504(h).

Public comment on these items is encouraged.

Dated: August 26, 1993.

Lewis Arnold,

Department Clearance Officer, Department of Justice.

[FR Doc. 93–21199 Filed 8–31–93; 8:45 am]

BILLING CODE 4410–10–M

Lodging of Consent Decree Pursuant to the Clean Air Act

In accordance with Departmental policy, 28 CFR 50.7, notice is hereby given that a proposed consent decree in *United States* v. *Archer Rubber Co.* Civil Action No. 90–40110, was lodged on August 18, 1993 with the United States District Court for the District of Massachusetts resolving the matter. The proposed Consent Decree concerns violations by Archer Rubber Co. of section 113 of the Clean Air Act ("CAA"), 42 U.S.C. 7413, and applicable provisions of the Massachusetts State Implementation Plan ("SIP") at Archer Rubber's facilities located in Milford, Massachusetts. The CAA violations alleged in the Complaint include emissions of volatile organic compounds in excess of the levels authorized by the Massachusetts SIP.

Under the terms of the Consent Decree, the defendant will pay a total civil penalty of $200,000 to the United States. In addition, Archer Rubber will undertake significant injunctive relief to come into compliance with the CAA and the Massachusetts SIP, including installation of emission control equipment, and testing of the equipment to insure that Archer Rubber's emissions comply with applicable limits.

The Department of Justice will receive, for a period of thirty (30) days from the date of this publication, comments relating to the proposed consent decree. Comments should be addressed to the Assistant Attorney General for the Environment and Natural Resources Division, Department of Justice, Washington, DC 20530, and should refer to *United States* v. *Archer Rubber Co.*, DOJ Ref. #90–5–2–1–1493.

The proposed consent decree may be examined at the office of the United States Attorney, 1003 J.W. McCormack Post Office and Courthouse, Boston, MA 02109 c/o Sharon Williams, (617) 223–9403; the Region I Office of the Environmental Protection Agency, One Congress Street, Boston, Massachusetts; and at the Consent Decree Library, 1120 G Street, NW., 4th Floor, Washington, DC 20005, (202) 624–0892. A copy of the proposed consent decree may be obtained in person or by mail from the Consent Decree Library, 1120 G Street, NW., 4th Floor, Washington, DC 20005. In requesting a copy please refer to the referenced case and enclose a check in the amount of $17.25 (25 cents per page reproduction costs), payable to the Consent Decree Library.

John C. Cruden,

Chief, Environmental Enforcement Section, Environment and Natural Resources Division.

[FR Doc. 93–21180 Filed 8–31–93; 8:45 am]

BILLING CODE 4410–01–M

Lodging of Consent Decree Pursuant to the Resource Conservation and Recovery Act and the Clean Water Act

In accordance with Departmental policy, 28 CFR 50.7, notice is hereby given that on August 23, 1993, a proposed Consent Decree in *United States* versus *United Technologies Corporation*, No. H–90–715 (JAC) (D. Conn.), was lodged with the United States District Court for the District of Connecticut. The Second Amended Complaint in this action, which seeks civil penalties and injunctive relief, was filed by the United States against the United Technologies Corporation ("UTC"). The Second Amended Complaint alleges that UTC violated certain provisions of the Resource Conservation and Recovery Act ("RCRA"), 42 U.S.C. 6909 *et seq.*, at the following eight facilities located in the State of Connecticut: Six facilities that are part of the UTC's Pratt & Whitney Division ("P&W") located on Newell Street in Southington, Connecticut, Washington Avenue in North Haven, Connecticut, Aircraft Road in Southington, Connecticut, Aircraft Road in Middletown, Connecticut, Main Street in East Hartford, Connecticut, and Colt Street in East Hartford, Connecticut; one facility that is part of UTC's Hamilton Standard Division located in Windsor Locks, Connecticut; and one facility that is part of UTC's Sikorsky Aircraft Division located in Stratford, Connecticut. In addition, the Second Amended Complaint alleges that UTC violated certain provisions of the Clean Water Act ("CWA"), 33 U.S.C.

1251 *et seq.*, at all of the P&W facilities listed above (except for the P&W facility located at Colt Street in East Hartford, Connecticut), as well as the P&W facility located in Rocky Hill, Connecticut, the Hamilton Standard facility located in Windsor Locks, Connecticut, and the United Technologies Research Center located in East Hartford, Connecticut.

The State of Connecticut has filed a Complaint in Intervention in the action which joins in the CWA claims filed by the United States, and which also adds a number of related pendant claims under State law.

The proposed Consent Decree is a settlement of the claims filed by both the United States and the State of Connecticut. The Consent Decree provides that UTC will pay $4,251,910 to the United States, and $1,050,000 to the State of Connecticut, for a total civil penalty of $5,301,910. In addition, the Consent Decree sets forth specific injunctive relief related to the RCRA violations, the CWA violations, and the state law violations. The Consent Decree also requires UTC to implement an extensive multi-media environmental audit.

The Department of Justice will receive for a period of thirty (30) days from the date of this publication comments relating to the proposed Consent Decree. Comments should be addressed to the Assistant General of the Environment and Natural Resources Division, Department of Justice, Washington, DC 20530, and should refer to *United States* versus *United Technologies Corporation*, DOJ No. 90-7-1-536.

The proposed Consent Decree may be examined at the Region I Office of the Environmental Protection Agency, One Congress Street, Boston, Massachusetts 02203 (Amelia Katzen: 617-565-1133); at the office of the United States Attorney, District of Connecticut, Connecticut Financial Center, 24th Floor, 157 Church Street, New Haven, Connecticut 06150 (Sharon Jaffe: 203-773-2108), and at the Consent Decree Library, 1120 G Street, NW., Washington, DC 20005 (202-624-0982).

A copy of the proposed Consent Decree may be obtained in person or by mail from the Consent Decree Library, 1120 G Street, NW., Washington, DC 20005. In requesting a copy, please refer to the referenced case and enclose a check in the amount of $44.00 made payable to Consent Decree Library (25 cents per page reproduction cost).

Myles E. Flint,

Acting Assistant Attorney General, Environment and Natural Resources Division.

[FR Doc. 93-21179 Filed 8-31-93; 8:45 am]

BILLING CODE 4410-01-M

Lodging of Consent Decree Pursuant to the Federal Water Pollution Control Act

In accordance with Departmental policy, 28 CFR 50.7, notice is hereby given that a proposed consent decree in *In the Matter of Nautilus Motor Tanker Company, Ltd.*, Civil Action No. 90 CV 2419, was lodged on August 18, 1993 with the United States District Court for the District of New Jersey. The tanker M/T BT Nautilus on June 7, 1990 illegally discharged 250,000 gallons of No. 6 fuel oil into the New York/New Jersey Harbor in violation of the Federal Water Pollution Control Act as amended, 33 U.S.C. 1251 *et seq.* As a result of the illegal discharge of oil, natural resources owned by, or within the trusteeship of, the United States, the States of New York and New Jersey, and the City of New York, were injured or lost. The consent decree requires Nautilus to pay to the governments $3.3 million in compensation for natural resource damages and $700,000 in response costs in exchange for which Nautilus is released from all civil claims by the governments arising out of the spill. $3.3 million of the monies recovered will be placed in a trust account under the supervision of the court and will be used by the governments to restore, rehabilitate, replace, and acquire the equivalent of the natural resources injured by the spill.

The Department of Justice will receive, for a period of thirty (30) days from the date of this publication, comments relating to the proposed consent decree. Comments should be addressed to the Assistant Attorney General for the Environment and Natural Resources Division, Department of Justice, Washington, DC 20530, and should refer to *In the Matter of Nautilus Motor Tanker Company, Ltd.*, DOJ Ref. #90-5-1-1-3575.

The proposed consent decree may be examined at the office of the United States Attorney, 970 Broad Street, room 502, Newark, New Jersey 07102; and at the Consent Decree Library, 1120 G Street, NW., 4th Floor, Washington, DC 20005, (202) 624-0892. A copy of the proposed consent decree may be obtained in person or by mail from the Consent Decree Library, 1120 G Street, NW., 4th Floor, Washington, DC 20005. In requesting a copy please refer to the referenced case and enclose a check in the amount of $5.75 (25 cents per page reproduction costs), payable to the Consent Decree Library.

John C. Cruden,

Chief, Environmental Enforcement Section, Environment and Natural Resources Division.

[FR Doc. 93-21181 Filed 8-31-93; 8:45 am]

BILLING CODE 4410-01-M

Drug Enforcement Administration

Manufacturer of Controlled Substances; Application

Pursuant to § 1301.43(a) of title 21 of the Code of Federal Regulations (CFR), this is notice that on July 23, 1993, Cambridge Isotope Lab, 20 Commerce Way, Woburn, Massachusetts 01801, made application to the Drug Enforcement Administration (DEA) for registration as a bulk manufacturer of the basic classes of controlled substances listed below:

Drug	Schedule
Cocaine (9041)	II
Codeine (9050)	II
Oxycodone (9143)	II
Hydromorphone (9150)	II
Morphine (9300)	II

The firm will manufacture small quantities of the above controlled substances, labeled with stable isotopes for use as laboratory standards and for research and biochemical purposes only.

Any other such applicant and any person who is presently registered with DEA to manufacture substances may file comments or objections to the issuance of the above application and may also file a written request for a hearing thereon in accordance with 21 CFR 1301.54 and in the form prescribed by 21 CFR 1316.47.

Any such comments, objections, or requests for a hearing may be addressed to the Director, Office of Diversion Control, Drug Enforcement Administration, United States Department of Justice, Washington, DC 20537, Attention: DEA Federal Register Representative (CCR), and must be filed no later than October 1, 1993.

Dated: August 25, 1993.

Gene R. Haislip,

Director, Office of Diversion Control, Drug Enforcement Administration.

[FR Doc. 93-21191 Filed 8-31-93; 8:45 am]

BILLING CODE 4410-09-M

Manufacturer of Controlled Substances; Application

Pursuant to § 1301.43(a) of title 21 of the Code of Federal Regulations (CFR), this is notice that on July 28, 1993, Johnson Matthey Inc., Custom

this is notice that on July 28, 1993, Johnson Matthey Inc., Custom Pharmaceuticals Department, 2003 Nolte Drive, West Deptford, New Jersey 08066, made written request to the Drug Enforcement Administration (DEA) for registration as a bulk manufacturer of the Schedule I controlled substance, 2,5-Dimethoxyamphetamine (7396).

The firm plans to procure the controlled substance for conversion to an exempt product for resale.

Any other such applicant and any person who is presently registered with DEA to manufacture such substances may file comments or objections to the issuance of the above application and may also file a written request for a hearing thereon in accordance with 21 CFR 1301.54 and in the form prescribed by 21 CFR 1316.47.

Any such comments, objections, or requests for a hearing may be addressed to the Director, Office of Diversion Control, Drug Enforcement Administration, United States Department of Justice, Washington, DC 20537, Attention: DEA Federal Register Representative (CCR), and must be filed no later than October 1, 1993.

Dated: August 25, 1993.

Gene R. Haislip,

Director, Office of Diversion Control, Drug Enforcement Administration.

[FR Doc. 93-21188 Filed 8-31-93; 8:45 am]

BILLING CODE 4410-09-M

Importation of Controlled Substances; Application

Pursuant to section 1008 of the Controlled Substances Import and Export Act (21 U.S.C. 958(i)), the Attorney General shall, prior to issuing a registration under this section to a bulk manufacturer of a controlled substance in Schedule I or II and prior to issuing a regulation under section 1002(a) authorizing the importation of such a substance, provide manufacturers holding registrations for the bulk manufacture of the substance an opportunity for a hearing.

Therefore, in accordance with § 1311.42 of title 21, Code of Federal Regulations (CFR), notice is hereby given that on February 17, 1993, Stepan Company, Natural Products Dept., 100 W. Hunter Avenue, Maywood, New Jersey 07607, made application to the Drug Enforcement Administration to be registered as an importer of the basic classes of controlled substances listed below:

Drug	Schedule
Coca Leaves (9040)	II
Cocaine (9041)	II
Benzoylecgonine (9180)	II

Any manufacturer holding, or applying for, registration as a bulk manufacturer of this basic class of controlled substance may file written comments on or objections to the application described above and may, at the same time, file a written request for a hearing on such application in accordance with 21 CFR 1301.54 in such form as prescribed by 21 CFR 1316.47.

Any such comments, objections, or requests for a hearing may be addressed to the Director, Office of Diversion Control, Drug Enforcement Administration, United States Department of Justice, Washington, DC 20537, Attention: DEA Federal Register Representative (CCR), and must be filed no later than October 1, 1993.

This procedure is to be conducted simultaneously with and independent of the procedures described in 21 CFR 1311.42 (b), (c), (d), (e), and (f). As noted in a previous notice at 40 FR 43745-46 (September 23, 1975), all applicants for registration to import a basic class of any controlled substance in Schedule I or II are and will continue to be required to demonstrate to the Director, Office of Diversion Control, Drug Enforcement Administration that the requirements for such registration pursuant to 21 U.S.C. 958(a), 21 U.S.C. 823(a), and 21 CFR 1311.42 (a), (b), (c), (d), (e), and (f) are satisfied.

Dated: August 25, 1993.

Gene R. Haislip,

Director, Office of Diversion Control, Drug Enforcement Administration.

[FR Doc. 93-21189 Filed 8-31-93; 8:45 am]

BILLING CODE 4410-09-M

Manufacturer of Controlled Substances; Application

Pursuant to § 1301.43(a) of title 21 of the Code of Federal Regulations (CFR), this is notice that on February 17, 1993, Stepan Company, Natural Products Dept., 100 W. Hunter Avenue, Maywood, New Jersey 07607, made application to the Drug Enforcement Administration (DEA) for registration as a bulk manufacturer of the basic classes of controlled substances listed below:

Drug	Schedule
Cocaine (9041)	II
Benzoylecgonine (9180)	II

Any other such applicant and any person who is presently registered with DEA to manufacture such substances may file comments or objections to the issuance of the above application and may also file a written request for a hearing thereon in accordance with 21 CFR 1301.54 and in the form prescribed by 21 CFR 1316.47.

Any such comments, objections, or requests for a hearing may be addressed to the Director, Office of Diversion Control, Drug Enforcement Administration, United States Department of Justice, Washington, DC 20537, Attention: DEA Federal Register Representative (CCR), and must be filed no later than October 1, 1993.

Dated: August 25, 1993.

Gene R. Haislip,

Director, Office of Diversion Control, Drug Enforcement Administration.

[FR Doc. 93-21190 Filed 8-31-93; 8:45 am]

BILLING CODE 4410-09-M

DEPARTMENT OF LABOR

Office of the Secretary

Agency Recordkeeping/Reporting Requirements Under Review by the Office of Management and Budget (OMB)

Background: The Department of Labor, in carrying out its responsibilities under the Paperwork Reduction Act (44 U.S.C. Chapter 35), considers comments on the reporting/recordkeeping requirements that will affect the public.

List of Recordkeeping/Reporting Requirements under Review: As necessary, the Department of Labor will publish a list of the Agency recordkeeping/reporting requirements under review by the Office of Management and Budget (OMB) since the last list was published. The list will have all entries grouped into new collections, revisions, extensions, or reinstatements. The Departmental Clearance Officer will, upon request, be able to advise members of the public of the nature of the particular submission they are interested in.

Each entry may contain the following information:

The Agency of the Department issuing this recordkeeping/reporting requirement.

The title of the recordkeeping/reporting requirement.

The OMB and/or Agency identification numbers, if applicable.

How often the recordkeeping/reporting requirement is needed.

Whether small businesses or organizations are affected.

An estimate of the total number of hours needed to comply with the recordkeeping/reporting requirements and the average hours per respondent.

The number of forms in the request for approval, if applicable.

An abstract describing the need for and uses of the information collection.

Comments and Questions: Copies of the recordkeeping/reporting requirements may be obtained by calling the Departmental Clearance Officer, Kenneth A. Mills ((202) 219–5095). Comments and questions about the items on this list should be directed to Mr. Mills, Office of Information Resources Management Policy, U.S. Department of Labor, 200 Constitution Avenue, NW., room N–1301, Washington, DC 20210. Comments should also be sent to the Office of Information and Regulatory Affairs, Attn: OMB Desk Officer for (BLS/DM/ESA/ETA/OLMS/MSHA/OSHA/PWBA/VETS), Office of Management and Budget, room 3001, Washington, DC 20503 ((202) 395–6880).

Any member of the public who wants to comment on recordkeeping/ reporting requirements which have been submitted to OMB should advise Mr. Mills of this intent at the earliest possible date.

Revision

Employment and Training Administration

Standard Job Corps Center RFP and Related Contractor Information Gathering

1205–0219; ETA 6–37, 6–38, 6–39, 6–124, 6–125, 6–127, 6–128, 2181, 2181A, 2110, 3–28, 6–131 A/B/C, 6–106, 6–101, 6–104, 6–105, 6–107, 6–108, 6–61, 6–102, 6–103, 6–40, 6–99, 6–112, 6–135, 6–136, 6–142B

On occasion, Weekly, Monthly, Quarterly, Semi-Annual, Annually

State or local governments; Businesses or other for-profit; Federal agencies or employees; Non-profit institutions, Small businesses or organizations

Form #	Affected public	Respondents	Frequency	Average time per response
ETA 6–37, 6–38, 6–39	JC Centers	108	Quarterly	15 minutes.
ETA 6–127	JC Centers	108	Monthly	2 hours.
ETA 6–125	JC Centers	108	Annually	15 minutes.
ETA 6–128	JC Centers	108	Annually	2 minutes.
ETA 2181, 2181A	JC Centers	250	Annually	2 hours.
ETA 2110	JC Centers	108	Monthly	2 1/2 hours.
ETA 6–124	JC Centers	108	Annually	1 hour.
ETA 6–142B	JC Centers	108	Monthly	3 hours, 33 minutes.
ETA 3–28	JC Centers	78	373	1 minute.
Center Oper Plan	JC Centers	78	Annually	28 hours.
Maintenance Plan	JC Centers	108	Annually	5 hours.
C/M Welfare Plan	JC Centers	108	Annually	2 hours.
Annual VST (if applicable)	JC Centers	108	Annually	4 hours.
Energy Conservation	JC Centers	108	Annually	5 hours.
Outreach, Screening (if applicable)	JC Centers	108	Annually	2 hours.
Annual Staff Training	JC Centers	108	Annually	1 hour.
ETA 6–131A	Corpsmembers	1,500	One-time	3 minutes.
ETA 6–131B	Corpsmembers	3,000	One-time	9 minutes.
ETA 6–131C	Corpsmembers	1,500	One-time	1 minute.
ETA 6–106	Corpsmembers	60,000	One-time	3 minutes.
ETA 6–101	Corpsmembers	500	As needed	3 minutes.
ETA 6–104	Corpsmembers	10,000	As needed	1 minute.
ETA 6–105	Corpsmembers	60,000	Annually	3 minutes.
ETA 6–107	Corpsmembers	60,000	Quarterly	3 minutes.
ETA 6–108	Corpsmembers	1,500	Weekly	3 minutes.
ETA 6–61	Corpsmembers	60,000	One-time	9 minutes.
ETA 6–102	Corpsmembers	3,500	As needed	9 minutes.
ETA 6–103	Corpsmembers	250	As needed	3 minutes.
ETA 6–40	Corpsmembers	60,000	One-time	2 minutes.
ETA 6–99	Corpsmembers	60,000	One-time	9 minutes.
ETA 6–112	Corpsmembers	60,000	One-time	1 minute.
ETA 6–135	Corpsmembers	60,000	One-time	1 minute.
ETA 6–136	Corpsmembers	60,000	One-time	9 minutes.
TWX Auth Med Terms	Corpsmembers	1,500	Occasionally	1 minute.
Procurement Activity	JC Contractors	4	As needed	2,200 hours.
109,485 total hours.				

Standard Request for Proposal for the operation of a Job Corps Center completed by prospective contractors for competitive procurements and Federal paperwork requirements for contract operators of such centers.

Signed at Washington, DC this 26th day of August, 1993.

Richard B. Baker,

Acting Departmental Clearance Officer.

[FR Doc. 93–21272 Filed 8–31–93; 8:45 am]

BILLING CODE 4510–30–P

Mine Safety and Health Administration

Petitions for Modification

The following parties have filed petitions to modify the application of mandatory safety standards under section 101(c) of the Federal Mine Safety and Health Act of 1977.

1. Baylor Rush, Inc.

[Docket No. M-93-213-C]

Baylor Rush, Inc., P.O. Box 32, Saint Clair, Pennsylvania 17970 has filed a petition to modify the application of 30 CFR 75.332 (b)(1) and (b)(2) (working sections and working places) to its No. 2 Slope (I.D. No. 36-01789) located in Schuylkill County, Pennsylvania. The petitioner proposes to use air passing through inaccessible abandoned workings and additional areas by mixing with the air in the intake haulage slope to ventilate the only active working section, to ensure air quality by sampling intake air during preshift and on-shift examinations, and to suspend mine production when air quality fails to meet specified criteria. The petitioner asserts that the proposed alternate method would provide at least the same measure of protection as would the mandatory standard.

2. Baylor Rush, Inc.

[Docket No. M-93-214-C]

Baylor Rush, Inc., P.O. Box 32, Saint Clair, Pennsylvania 17970 has filed a petition to modify the application of 30 CFR 75.335 (construction of seals) to its No. 2 Slope (I.D. No. 36-01789) located in Schuylkill County, Pennsylvania. The petitioner requests a modification of the standard to permit alternative methods of construction using wooden materials of moderate size and weight due to the difficulty in accessing previously driven headings and breasts containing inaccessible abandoned workings; to accept a design criteria in the 10 psi range; and to permit the water trap to be installed in the gangway seal and sampling tube in the monkey seal for seals installed in pairs. The petitioner asserts that the proposed alternate method would provide at least the same measure of protection as would the mandatory standard.

3. Baylor Rush, Inc.

[Docket No. M-93-215-C]

Baylor Rush, Inc., P.O. Box 32, Saint Clair, Pennsylvania 17970 has filed a petition to modify the application of 30 CFR 75.364(b) (1), (4), and (5) (weekly examination) to its No. 2 Slope (I.D. No. 36-01789) located in Schuylkill County, Pennsylvania. Due to hazardous conditions, daily or weekly traveling of the intake air course significantly increases the fall potential. The petitioner proposes to examine the intake haulage slope and primary escapeway from the gunboat/slope car with an alternative air quality evaluation at the section's intake level, and to travel and thoroughly examine these areas for hazardous conditions once a month. The petitioner asserts that the proposed alternate method would provide at least the same measure of protection as would the mandatory standard.

4. Rhen Coal Company

[Docket No. M-93-216-C]

Rhen Coal Company, R.D. #3, Box 21, Pine Grove, Pennsylvania 17963 has filed a petition to modify the application of 30 CFR 75.332 (b)(1) and (b)(2) (working sections and working places) to its Skidmore Slope (I.D. No. 36-08031) located in Schuylkill County, Pennsylvania. The petitioner proposes to use air passing through inaccessible abandoned workings and additional areas by mixing with the air in the intake haulage slope to ventilate the only active working section, to ensure air quality by sampling intake air during preshift and on-shift examinations, and to suspend mine production when air quality fails to meet specified criteria. The petitioner asserts that the proposed alternate method would provide at least the same measure of protection as would the mandatory standard.

5. Rhen Coal Company

[Docket No. M-93-217-C]

Rhen Coal Company, R.D. #3, Box 21, Pine Grove, Pennsylvania 17963 has filed a petition to modify the application of 30 CFR 75.335 (construction of seals) to its Skidmore Slope (I.D. No. 36-08031) located in Schuylkill County, Pennsylvania. The petitioner requests a modification of the standard to permit alternative methods of construction using wooden materials of moderate size and weight due to the difficulty in accessing previously driven headings and breasts containing inaccessible abandoned workings; to accept a design criteria in the 10 psi range; and to permit the water trap to be installed in the gangway seal and sampling tube in the monkey seal for seals installed in pairs. The petitioner asserts that the proposed alternate method would provide at least the same measure of protection as would the mandatory standard.

6. Rhen Coal Company

[Docket No. M-93-218-C]

Rhen Coal Company, R.D. #3, Box 21, Pine Grove, Pennsylvania 17963 has filed a petition to modify the application of 30 CFR 75.360 (preshift examination) to its Skidmore Slope (I.D. No. 36-08031) located in Schuylkill County, Pennsylvania. The petitioner proposes to examine each seal for physical damage from the slope gunboat during the preshift examination after an air quantity reading is taken in by the intake portal and to test for the quantity and quality of air at the intake air split locations off the slope in the gangway portion of the working section. The petitioner proposes to physically examine the entire length of the slope once a month. The petitioner asserts that the proposed alternate method would provide at least the same measure of protection as would the mandatory standard.

7. Rhen Coal Company

[Docket No. M-93-219-C]

Rhen Coal Company, R.D. #3, Box 21, Pine Grove, Pennsylvania 17963 has filed a petition to modify the application of 30 CFR 75.364(b)(1), (4), and (5) (weekly examination) to its Skidmore Slope (I.D. No. 36-08031) located in Schuylkill County, Pennsylvania. Due to hazardous conditions, daily or weekly traveling of the intake air course significantly increases the fall potential. The petitioner proposes to examine the intake haulage slope and primary escapeway from the gunboat/slope car with an alternative air quality evaluation at the section's intake level, and to travel and thoroughly examine these areas for hazardous conditions once a month. The petitioner asserts that the proposed alternate method would provide at least the same measure of protection as would the mandatory standard.

8. Rhen Coal Company

[Docket No. M-93-220-C]

Rhen Coal Company, R.D. #3, Box 21, Pine Grove, Pennsylvania 17963 has filed a petition to modify the application of 30 CFR 75.1100-2(a)(2) (quantity and location of firefighting equipment) to its Skidmore Slope (I.D. No. 36-08031) located in Schuylkill County, Pennsylvania. The petitioner proposes to use only portable fire extinguishers to replace existing requirements where rock dust, water cars, and other water storage are not practical. The petitioner asserts that the proposed alternate method would provide at least the same measure of protection as would the mandatory standard.

9. Rhen Coal Company

[Docket No. M-93-221-C]

Rhen Coal Company, R.D. #3, Box 21, Pine Grove, Pennsylvania 17963 has filed a petition to modify the application of 30 CFR 75.1200(i) (mine map) to its Skidmore Slope (I.D. No. 36-08031) located in Schuylkill County, Pennsylvania. The petitioner proposes

to limit the mapping of mine workings above and below to those present within 100 feet of the vein being mined except when veins are interconnected to other veins beyond the 100 feet limit through rock tunnels. The petitioner asserts that the proposed alternate method would provide at least the same measure of protection as would the mandatory standard.

10. Rhen Coal Company

[Docket No. M-93-222-C]

Rhen Coal Company, R.D. #3, Box 21, Pine Grove, Pennsylvania 17963 has filed a petition to modify the application of 30 CFR 75.1202-1(a) (temporary notations, revisions, and supplements) to its Skidmore Slope (I.D. No. 36-08031) located in Schuylkill County, Pennsylvania. The petitioner proposes to revise and supplement mine maps on an annual basis instead of the required 6 month interval and to update maps daily by hand notations. The petitioner asserts that the proposed alternate method would provide at least the same measure of protection as would the mandatory standard.

11. Tucker Hill Coal Company

[Docket No. M-93-223-C]

Tucker Hill Coal Company, 53 Water Street, New Philadelphia, Pennsylvania 17959 has filed a petition to modify the application of 30 CFR 75.332 (b)(1) and (b)(2) (working sections and working places) to its No. 1 Slope (I.D. No. 36-07478) located in Schuylkill County, Pennsylvania. The petitioner proposes to use air passing through inaccessible abandoned workings and additional areas by mixing with the air in the intake haulage slope to ventilate the only active working section, to ensure air quality by sampling intake air during preshift and on-shift examinations, and to suspend mine production when air quality fails to meet specified criteria. The petitioner asserts that the proposed alternate method would provide at least the same measure of protection as would the mandatory standard.

12. Tucker Hill Coal Company

[Docket No. M-93-224-C]

Tucker Hill Coal Company, 53 Water Street, New Philadelphia, Pennsylvania 17959 has filed a petition to modify the application of 30 CFR 75.335 (construction of seals) to its No. 1 Slope (I.D. No. 36-07478) located in Schuylkill County, Pennsylvania. The petitioner requests a modification of the standard to permit alternative methods of construction using wooden materials of moderate size and weight due to the difficulty in accessing previously driven headings and breasts containing inaccessible abandoned workings; to accept a design criteria in the 10 psi range; and to permit the water trap to be installed in the gangway seal and sampling tube in the monkey seal for seals installed in pairs. The petitioner asserts that the proposed alternate method would provide at least the same measure of protection as would the mandatory standard.

13. Tucker Hill Coal Company

[Docket No. M-93-225-C]

Tucker Hill Coal Company, 53 Water Street, New Philadelphia, Pennsylvania 17959 has filed a petition to modify the application of 30 CFR 75.360 (preshift examination) to its No. 1 Slope (I.D. No. 36-07478) located in Schuylkill County, Pennsylvania. The petitioner proposes to examine each seal for physical damage from the slope gunboat during the preshift examination after an air quantity reading is taken in by the intake portal and to test for the quantity and quality of air at the intake air split locations off the slope in the gangway portion of the working section. The petitioner proposes to physically examine the entire length of the slope once a month. The petitioner asserts that the proposed alternate method would provide at least the same measure of protection as would the mandatory standard.

14. Tucker Hill Coal Company

[Docket No. M-93-226-C]

Tucker Hill Coal Company, 53 Water Street, New Philadelphia, Pennsylvania 17959 has filed a petition to modify the application of 30 CFR 75.364(b) (1), (4), and (5) (weekly examination) to its No. 1 Slope (I.D. No. 36-07478) located in Schuylkill County, Pennsylvania. Due to hazardous conditions, daily or weekly traveling of the intake air course significantly increases the fall potential. The petitioner proposes to examine the intake haulage slope and primary escapeway from the gunboat/slope car with an alternative air quality evaluation at the section's intake level, and to travel and thoroughly examine these areas for hazardous conditions once a month. The petitioner asserts that the proposed alternate method would provide at least the same measure of protection as would the mandatory standard.

15. Tucker Hill Coal Company

[Docket No. M-93-227-C]

Tucker Hill Coal Company, 53 Water Street, New Philadelphia, Pennsylvania 17959 has filed a petition to modify the application of 30 CFR 75.1100-2(a)(2) (quantity and location of firefighting equipment) to its No. 1 Slope (I.D. No. 36-07478) located in Schuylkill County, Pennsylvania. The petitioner proposes to use only portable fire extinguishers to replace existing requirements where rock dust, water cars, and other water storage are not practical. The petitioner asserts that the proposed alternate method would provide at least the same measure of protection as would the mandatory standard.

16. Tucker Hill Coal Company

[Docket No. M-93-228-C]

Tucker Hill Coal Company, 53 Water Street, New Philadelphia, Pennsylvania 17959 has filed a petition to modify the application of 30 CFR 75.1200(i) (mine map) to its No. 1 Slope (I.D. No. 36-07478) located in Schuylkill County, Pennsylvania. The petitioner proposes to limit the mapping of mine workings above and below to those present within 100 feet of the vein being mined except when veins are interconnected to other veins beyond the 100 feet limit through rock tunnels. The petitioner asserts that the proposed alternate method would provide at least the same measure of protection as would the mandatory standard.

17. Tucker Hill Coal Company

[Docket No. M-93-229-C]

Tucker Hill Coal Company, 53 Water Street, New Philadelphia, Pennsylvania 17959 has filed a petition to modify the application of 30 CFR 75.1202-1(a) (temporary notations, revisions, and supplements) to its No. 1 Slope (I.D. No. 36-07478) located in Schuylkill County, Pennsylvania. The petitioner proposes to revise and supplement mine maps on an annual basis instead of the required 6 month interval and to update maps daily by hand notations. The petitioner asserts that the proposed alternate method would provide at least the same measure of protection as would the mandatory standard.

18. S & M Coal Company

[Docket No. M-93-230-C]

S & M Coal Company, 189 N Street, Lykens, Pennsylvania 17048 has filed a petition to modify the application of 30 CFR 75.332 (b)(1) and (b)(2) (working sections and working places) to its Buck Mt. Slope (I.D. No. 36-02022) located in Schuylkill County, Pennsylvania. The petitioner proposes to use air passing through inaccessible abandoned workings and additional areas by mixing with the air in the intake haulage slope to ventilate the only active working section, to ensure air quality by sampling intake air during

preshift and on-shift examinations, and to suspend mine production when air quality fails to meet specified criteria. The petitioner asserts that the proposed alternate method would provide at least the same measure of protection as would the mandatory standard.

19. S & M Coal Company

[Docket No. M-93-231-C]

S & M Coal Company, 189 N Street, Lykens, Pennsylvania 17048 has filed a petition to modify the application of 30 CFR 75.335 (construction of seals) to its Buck Mt. Slope (I.D. No. 36-02022) located in Schuylkill County, Pennsylvania. The petitioner requests a modification of the standard to permit alternative methods of construction using wooden materials of moderate size and weight due to the difficulty in accessing previously driven headings and breasts containing inaccessible abandoned workings; to accept a design criteria in the 10 psi range; and to permit the water trap to be installed in the gangway seal and sampling tube in the monkey seal for seals installed in pairs. The petitioner asserts that the proposed alternate method would provide at least the same measure of protection as would the mandatory standard.

20. S & M Coal Company

[Docket No. M-93-232-C]

S & M Coal Company, 189 N Street, Lykens, Pennsylvania 17048 has filed a petition to modify the application of 30 CFR 75.360 (preshift examination) to its Buck Mt. Slope (I.D. No. 36-02022) located in Schuylkill County, Pennsylvania. The petitioner proposes to examine each seal for physical damage from the slope gunboat during the preshift examination after an air quantity reading is taken in by the intake portal and to test for the quantity and quality of air at the intake air split locations off the slope in the gangway portion of the working section. The petitioner proposes to physically examine the entire length of the slope once a month. The petitioner asserts that the proposed alternate method would provide at least the same measure of protection as would the mandatory standard.

21. S & M Coal Company

[Docket No. M-93-233-C]

S & M Coal Company, 189 N Street, Lykens, Pennsylvania 17048 has filed a petition to modify the application of 30 CFR 75.364(b) (1), (4), and (5) (weekly examination) to its Buck Mt. Slope (I.D. No. 36-02022) located in Schuylkill County, Pennsylvania. Due to hazardous conditions, daily or weekly traveling of the intake air course significantly increases the fall potential. The petitioner proposes to examine the intake haulage slope and primary escapeway from the gunboat/slope car with an alternative air quality evaluation at the section's intake level, and to travel and thoroughly examine these areas for hazardous conditions once a month. The petitioner asserts that the proposed alternate method would provide at least the same measure of protection as would the mandatory standard.

22. S & M Coal Company

[Docket No. M-93-234-C]

S & M Coal Company, 189 N Street, Lykens, Pennsylvania 17048 has filed a petition to modify the application of 30 CFR 75.1100 2(a)(2) (quantity and location of firefighting equipment) to its Buck Mt. Slope (I.D. No. 36-02022) located in Schuylkill County, Pennsylvania. The petitioner proposes to use only portable fire extinguishers to replace existing requirements where rock dust, water cars, and other water storage are not practical. The petitioner asserts that the proposed alternate method would provide at least the same measure of protection as would the mandatory standard.

23. S & M Coal Company

[Docket No. M-93-235-C]

S & M Coal Company, 189 N Street, Lykens, Pennsylvania 17048 has filed a petition to modify the application of 30 CFR 75.1200(i) (mine map) to its Buck Mt. Slope (I.D. No. 36-02022) located in Schuylkill County, Pennsylvania. The petitioner proposes to limit the mapping of mine workings above and below to those present within 100 feet of the vein being mined except when veins are interconnected to other veins beyond the 100 feet limit through rock tunnels. The petitioner asserts that the proposed alternate method would provide at least the same measure of protection as would the mandatory standard.

24. S & M Coal Company

[Docket No. M-93-236-C]

S & M Coal Company, 189 N Street, Lykens, Pennsylvania 17048 has filed a petition to modify the application of 30 CFR 75.1202-1(a) (temporary notations, revisions, and supplements) to its Buck Mt. Slope (I.D. No. 36-02022) located in Schuylkill County, Pennsylvania. The petitioner proposes to revise and supplement mine maps on an annual basis instead of the required 6 month interval and to update maps daily by hand notations. The petitioner asserts that the proposed alternate method would provide at least the same measure of protection as would the mandatory standard.

25. S & T Coal Company

[Docket No. M-93-237-C]

S & T Coal Company, R.D. #1, Box 56A, Hegins, Pennsylvania 17938 has filed a petition to modify the application of 30 CFR 75.332 (b)(1) and (b)(2) (working sections and working places) to its Bixler Mine (I.D. No. 36-01984) located in Schuylkill County, Pennsylvania. The petitioner proposes to use air passing through inaccessible abandoned workings and additional areas by mixing with the air in the intake haulage slope to ventilate the only active working section, to ensure air quality by sampling intake air during preshift and on-shift examinations, and to suspend mine production when air quality fails to meet specified criteria. The petitioner asserts that the proposed alternate method would provide at least the same measure of protection as would the mandatory standard.

26. S & T Coal Company

[Docket No. M-93-238-C]

S & T Coal Company, R.D. #1, Box 56A, Hegins, Pennsylvania 17938 has filed a petition to modify the application of 30 CFR 75.335 (construction of seals) to its Bixler Mine (I.D. No. 36-01984) located in Schuylkill County, Pennsylvania. The petitioner requests a modification of the standard to permit alternative methods of construction using wooden materials of moderate size and weight due to the difficulty in accessing previously driven headings and breasts containing inaccessible abandoned workings; to accept a design criteria in the 10 psi range; and to permit the water trap to be installed in the gangway seal and sampling tube in the monkey seal for seals installed in pairs. The petitioner asserts that the proposed alternate method would provide at least the same measure of protection as would the mandatory standard.

27. S & T Coal Company

[Docket No. M-93-239-C]

S & T Coal Company, R.D. #1, Box 56A, Hegins, Pennsylvania 17938 has filed a petition to modify the application of 30 CFR 75.1100-2(a)(2) (quantity and location of firefighting equipment) to its Bixler Mine (I.D. No. 36-01984) located in Schuylkill County, Pennsylvania. The petitioner proposes to use only portable fire extinguishers to replace existing requirements where rock dust, water cars, and other water

storage are not practical. The petitioner asserts that the proposed alternate method would provide at least the same measure of protection as would the mandatory standard.

28. S & T Coal Company

[Docket No. M-93-240-C]

S & T Coal Company, R.D. #1, Box 56A, Hegins, Pennsylvania 17938 has filed a petition to modify the application of 30 CFR 75.1202-1(a) (temporary notations, revisions, and supplements) to its Bixler Mine (I.D. No. 36-01984) located in Schuylkill County, Pennsylvania. The petitioner proposes to revise and supplement mine maps on an annual basis instead of the required 6 month interval and to update maps daily by hand notations. The petitioner asserts that the proposed alternate method would provide at least the same measure of protection as would the mandatory standard.

29. S & T Coal Company

[Docket No. M-93-241-C]

S & T Coal Company, R.D. #1, Box 56A, Hegins, Pennsylvania 17938 has filed a petition to modify the application of 30 CFR 75.1400 to its Bixler Mine (I.D. No. 36-01984) located in Schuylkill County, Pennsylvania. The petitioner proposes to transport persons in a man cage or a gunboat with secondary safety connections securely fastened around the gunboat and to the hoisting rope above the main connecting device, instead of safety catches or no other less effective devices, because of steeply pitching and undulating slopes with numerous curves and knuckles in the main haulage slopes. The petitioner asserts that the proposed alternate method would provide at least the same measure of protection as would the mandatory standard.

Request for Comments

Persons interested in these petitions may furnish written comments. These comments must be filed with the Office of Standards, Regulations and Variances, Mine Safety and Health Administration, room 627, 4015 Wilson Boulevard, Arlington, Virginia 22203. All comments must be postmarked or received in that office on or before October 1, 1993. Copies of these petitions are available for inspection at that address.

Dated: August 25, 1993.

Patricia W. Silvey,

Director, Office of Standards, Regulations and Variances.

[FR Doc. 93-21257 Filed 8-31-93; 8:45 am]

BILLING CODE 4510-43-P

NATIONAL FOUNDATION ON THE ARTS AND THE HUMANITIES

National Endowment for the Arts; Meeting

Notice is hereby given that a meeting of the Dance Program Dance Heritage Study Group will be held on September 8, 1993 from 10 a.m. to 5:30 p.m. This meeting will be held in room M-09, at the Nancy Hanks Center, 1100 Pennsylvania Avenue, NW., Washington, DC 20506.

This meeting will be open to the public on a space available basis. Topics of discussion will include Dance Preservation and Documentation.

Any interested person may observe meetings, or portions thereof, which are open to the public, and may be permitted to participate in the discussions at the discretion of the meeting chairman and with the approval of the full-time Federal employee in attendance.

If you need special accommodations due to a disability, please contact the Office of Special Constituencies, National Endowment for the Arts, 1100 Pennsylvania Avenue, NW., Washington, DC 20506, 202/682-5532, TTY 202/682-5496, at least seven (7) days prior to the meeting.

Further information with references to this meeting can be obtained from Ms. Yvonne M. Sabine, Committee Management Officer, National Endowment for the Arts, Washington, DC 20506, or call 202/682-5439.

Dated: August 27, 1993.

Yvonne M. Sabine,

Director, Office of Panel Operations, National Endowment for the Arts.

[FR Doc. 93-21231 Filed 8-31-93; 8:45 am]

BILLING CODE 7537-01-M

NATIONAL CAPITAL PLANNING COMMISSION

Senior Executive Service; Performance Review Board; Members

AGENCY: National Capital Planning Commission.

ACTION: Notice of members of Senior Executive Service Performance Review Board.

SUMMARY: Section 4314(c) of title 5, U.S.C. (as amended by the Civil Service Reform Act of 1978) requires each agency to establish, in accordance with regulations prescribed by the Office of Personnel Management, one or more Performance Review Boards (PRB) to review, evaluate and make a final recommendation on performance appraisals assigned to individual members of the agency's Senior Executive Service. The PRB established for the National Capital Planning Commission also makes recommendations to the agency head regarding SES Performance awards, ranks and bonuses and recertification. Section 4314(c)(4) requires that notice of appointment of Performance Review Board members be published in the **Federal Register**.

The following persons have been appointed to serve as members of the Performance Review Board for the National Capital Planning Commission: Reginald W. Griffith, Eugene Kinlow, Syl Angel, Michael W. Crum, and Patricia G. Norry.

DATES: September 1, 1993.

FOR FURTHER INFORMATION CONTACT: Connie M. Harshaw, Executive Officer, National Capital Planning Commission, 801 Pennsylvania Ave, NW., Suite 301, Washington, DC 20576, (202) 724-0170.

Robert E. Gresham,

Asst. Exec. Dir. of Operations.

[FR Doc. 93-21258 Filed 8-31-93; 8:45 am]

BILLING CODE 7502-02-M

NUCLEAR REGULATORY COMMISSION

Biweekly Notice

Applications and Amendments to Facility Operating Licenses Involving No Significant Hazards Considerations

I. Background

Pursuant to Public Law 97-415, the U.S. Nuclear Regulatory Commission (the Commission or NRC staff) is publishing this regular biweekly notice. Public Law 97-415 revised section 189 of the Atomic Energy Act of 1954, as amended (the Act), to require the Commission to publish notice of any amendments issued, or proposed to be issued, under a new provision of section 189 of the Act. This provision grants the Commission the authority to issue and make immediately effective any amendment to an operating license upon a determination by the Commission that such amendment involves no significant hazards consideration, notwithstanding the pendency before the Commission of a request for a hearing from any person.

This biweekly notice includes all notices of amendments issued, or proposed to be issued from August 9, 1993, through August 20, 1993. The last biweekly notice was published on August 18, 1993 (58 FR 43922).

Notice of Consideration of Issuance of Amendments to Facility Operating Licenses, Proposed No Significant Hazards Consideration Determination, and Opportunity for a Hearing

The Commission has made a proposed determination that the following amendment requests involve no significant hazards consideration. Under the Commission's regulations in 10 CFR 50.92, this means that operation of the facility in accordance with the proposed amendment would not (1) involve a significant increase in the probability or consequences of an accident previously evaluated; or (2) create the possibility of a new or different kind of accident from any accident previously evaluated; or (3) involve a significant reduction in a margin of safety. The basis for this proposed determination for each amendment request is shown below.

The Commission is seeking public comments on this proposed determination. Any comments received within 30 days after the date of publication of this notice will be considered in making any final determination.

Normally, the Commission will not issue the amendment until the expiration of the 30-day notice period. However, should circumstances change during the notice period such that failure to act in a timely way would result, for example, in derating or shutdown of the facility, the Commission may issue the license amendment before the expiration of the 30-day notice period, provided that its final determination is that the amendment involves no significant hazards consideration. The final determination will consider all public and State comments received before action is taken. Should the Commission take this action, it will publish in the **Federal Register** a notice of issuance and provide for opportunity for a hearing after issuance. The Commission expects that the need to take this action will occur very infrequently.

Written comments may be submitted by mail to the Rules Review and Directives Branch, Division of Freedom of Information and Publications Services, Office of Administration, U.S. Nuclear Regulatory Commission, Washington, DC 20555, and should cite the publication date and page number of this **Federal Register** notice. Written comments may also be delivered to Room P-223, Phillips Building, 7920 Norfolk Avenue, Bethesda, Maryland from 7:30 a.m. to 4:15 p.m. Federal workdays. Copies of written comments received may be examined at the NRC Public Document Room, the Gelman Building, 2120 L Street, NW., Washington, DC 20555. The filing of requests for a hearing and petitions for leave to intervene is discussed below.

By October 1, 1993, the licensee may file a request for a hearing with respect to issuance of the amendment to the subject facility operating license and any person whose interest may be affected by this proceeding and who wishes to participate as a party in the proceeding must file a written request for a hearing and a petition for leave to intervene. Requests for a hearing and a petition for leave to intervene shall be filed in accordance with the Commission's "Rules of Practice for Domestic Licensing Proceedings" in 10 CFR Part 2. Interested persons should consult a current copy of 10 CFR 2.714 which is available at the Commission's Public Document Room, the Gelman Building, 2120 L Street, NW., Washington, DC 20555 and at the local public document room for the particular facility involved. If a request for a hearing or petition for leave to intervene is filed by the above date, the Commission or an Atomic Safety and Licensing Board, designated by the Commission or by the Chairman of the Atomic Safety and Licensing Board Panel, will rule on the request and/or petition; and the Secretary or the designated Atomic Safety and Licensing Board will issue a notice of a hearing or an appropriate order.

As required by 10 CFR 2.714, a petition for leave to intervene shall set forth with particularity the interest of the petitioner in the proceeding, and how that interest may be affected by the results of the proceeding. The petition should specifically explain the reasons why intervention should be permitted with particular reference to the following factors: (1) the nature of the petitioner's right under the Act to be made a party to the proceeding; (2) the nature and extent of the petitioner's property, financial, or other interest in the proceeding; and (3) the possible effect of any order which may be entered in the proceeding on the petitioner's interest. The petition should also identify the specific aspect(s) of the subject matter of the proceeding as to which petitioner wishes to intervene. Any person who has filed a petition for leave to intervene or who has been admitted as a party may amend the petition without requesting leave of the Board up to 15 days prior to the first prehearing conference scheduled in the proceeding, but such an amended petition must satisfy the specificity requirements described above.

Not later than 15 days prior to the first prehearing conference scheduled in the proceeding, a petitioner shall file a supplement to the petition to intervene which must include a list of the contentions which are sought to be litigated in the matter. Each contention must consist of a specific statement of the issue of law or fact to be raised or controverted. In addition, the petitioner shall provide a brief explanation of the bases of the contention and a concise statement of the alleged facts or expert opinion which support the contention and on which the petitioner intends to rely in proving the contention at the hearing. The petitioner must also provide references to those specific sources and documents of which the petitioner is aware and on which the petitioner intends to rely to establish those facts or expert opinion. Petitioner must provide sufficient information to show that a genuine dispute exists with the applicant on a material issue of law or fact. Contentions shall be limited to matters within the scope of the amendment under consideration. The contention must be one which, if proven, would entitle the petitioner to relief. A petitioner who fails to file such a supplement which satisfies these requirements with respect to at least one contention will not be permitted to participate as a party.

Those permitted to intervene become parties to the proceeding, subject to any limitations in the order granting leave to intervene, and have the opportunity to participate fully in the conduct of the hearing, including the opportunity to present evidence and cross-examine witnesses.

If a hearing is requested, the Commission will make a final determination on the issue of no significant hazards consideration. The final determination will serve to decide when the hearing is held.

If the final determination is that the amendment request involves no significant hazards consideration, the Commission may issue the amendment and make it immediately effective, notwithstanding the request for a hearing. Any hearing held would take place after issuance of the amendment.

If the final determination is that the amendment request involves a significant hazards consideration, any hearing held would take place before the issuance of any amendment.

A request for a hearing or a petition for leave to intervene must be filed with the Secretary of the Commission, U.S. Nuclear Regulatory Commission, Washington, DC 20555, Attention: Docketing and Services Branch, or may be delivered to the Commission's Public

Document Room, the Gelman Building, 2120 L Street, NW., Washington DC 20555, by the above date. Where petitions are filed during the last 10 days of the notice period, it is requested that the petitioner promptly so inform the Commission by a toll-free telephone call to Western Union at 1-(800) 248-5100 (in Missouri 1-(800) 342-6700). The Western Union operator should be given Datagram Identification Number N1023 and the following message addressed to **(Project Director)**: petitioner's name and telephone number, date petition was mailed, plant name, and publication date and page number of this **Federal Register** notice. A copy of the petition should also be sent to the Office of the General Counsel, U.S. Nuclear Regulatory Commission, Washington, DC 20555, and to the attorney for the licensee.

Nontimely filings of petitions for leave to intervene, amended petitions, supplemental petitions and/or requests for a hearing will not be entertained absent a determination by the Commission, the presiding officer or the Atomic Safety and Licensing Board that the petition and/or request should be granted based upon a balancing of factors specified in 10 CFR 2.714(a)(1)(i)-(v) and 2.714(d).

For further details with respect to this action, see the application for amendment which is available for public inspection at the Commission's Public Document Room, the Gelman Building, 2120 L Street, NW., Washington, DC 20555, and at the local public document room for the particular facility involved.

Boston Edison Company, Docket No. 50-293, Pilgrim Nuclear Power Station, Plymouth County, Massachusetts

Date of amendment request: August 9, 1993

Description of amendment request: The proposed change would revise setpoints for certain instrumentation listed in Technical Specification Tables 3.1.1, 3.2.B, 3.2.C-2, 3.2-G, and associated Bases. In conjunction with the setpoint evaluations, Boston Edison Company has reviewed the effects of increased calibration intervals on instrument drift. The increased calibration interval will not adversely affect plant operations or safety. The process and methodology for determining setpoints was presented in a Boston Edison submittal dated June 7, 1993.

Basis for proposed no significant hazards consideration determination: As required by 10 CFR 50.91(a), the licensee has provided its analysis of the issue of no significant hazards consideration, which is presented below:

1. The operation of Pilgrim Station in accordance with the proposed amendment will not involve a significant increase in the probability or consequences of an accident previously evaluated.

The proposed changes do not physically impact the design or functional requirements of associated systems. The proposed changes do not degrade the performance or increase the challenges to the associated safety systems assumed to function in the accident analyses. The proposed changes do not affect the availability of of equipment or systems required to mitigate the consequences of an accident, and do not affect the availability of redundant systems or equipment. The plant will continue to operate within the limits specified in the Core Operating Limits Report (COLR) and to take the same actions if setpoint limits are exceeded. In addition, the proposed setpoint changes were developed using the guidance provided in Generic Letter 91-04.

Therefore, the proposed changes do not significantly increase the probability or consequences of an accident previously evaluated.

2. The operation of Pilgrim Station in accordance with the proposed amendment will not create the possibility of a new or different kind of accident from any accident previously analyzed.

The proposed changes do not add or remove active components and therefore do not introduce failure mechanisms of a different type than those previously evaluated. In addition, the surveillance test requirements and the way surveillance tests are performed will remain unchanged. Since the intended operation and function of the analyzed systems do not change as a result of the setpoint analysis, no new initiators are introduced which are capable of initiating an accident which would render these systems unable to provide their required protection. Therefore, the proposed changes do not create the possibility of a new or different kind of accident from any accident previously evaluated.

3. The operation of Pilgrim Station in accordance with the proposed amendment will not involve a significant reduction in the margin of safety.

Although the proposed Technical Specification changes will result in an increase in the interval between surveillance tests, the existing margins of safety are maintained through our proposed setpoint revisions. The proposed setpoint changes either increase the plant safety margin or maintain the existing margin and do not significantly impact the availability, performance, or intended function of the affected systems. Therefore, the assumptions in the accident analyses are not impacted, and the proposed Technical Specification changes do not significantly reduce a margin of safety.

The NRC staff has reviewed the licensee's analysis, and based on this review, it appears that the three standards of 50.92(c) are satisfied. Therefore, the NRC staff proposes to determine that the amendment request involves no significant hazards consideration.

Local Public Document Room location: Plymouth Public Library, 11 North Street, Plymouth, Massachusetts 02360.

Attorney for licensee: W. S. Stowe, Esquire, Boston Edison Company, 800 Boylston Street, 36th Floor, Boston, Massachusetts 02199.

NRC Project Director: Walter R. Butler

Carolina Power & Light Company, Docket No. 50-261, H. B. Robinson Steam Electric Plant, Unit No. 2, Darlington County, South Carolina

Date of amendment request: August 5, 1993

Description of amendment request: The proposed amendment would provide a clarification of the emergency diesel generator testing requirements in Technical Specification (TS) 4.6.1.1 and 4.6.1.4. In TS 4.6.11 the amendment would replace the wording with more specific and detailed testing criteria which is more consistent with the improved Standard Technical Specifications. In TS 4.6.1.4 the change would include limitations for the continuous load rating and the short-term overload rating.

Basis for proposed no significant hazards consideration determination. As required by 10 CFR 50.91(a), the licensee has provided its analysis of the issue of no significant hazards consideration, which is presented below:

1. The proposed amendment does not involve a significant increase in the probability or consequences of an accident previously evaluated. These changes merely clarify Emergency Diesel Generator (EDG) surveillance requirements and load limits. The revised information would essentially involve no changes in the way that surveillance testing is being performed but would upgrade the TS to be consistent with current interpretations and standards and provide more specific and detailed criteria for surveillance testing and load limits. These surveillance tests and load limits help to ensure EDG operability and availability and have no impact on the probability or consequences of any accident previously evaluated.

2. The proposed amendment does not create the possibility of a new or different kind of accident from any accident previously evaluated. The changes affect EDG surveillance testing criteria and load limits. They do not represent any changes in current testing methodologies; they merely update the TS to reflect current interpretations and standards. There will be no change to equipment or modes of operation or testing of equipment. No physical plant changes will result from this amendment. The proposed amendment involves wording only, and this is to reflect current interpretations and

standards. Therefore, the proposed changes do not create the possibility of a new or different kind of accident from any accident previously evaluated.

3. The proposed amendment does not involve a significant reduction in the margin of safety. The changes proposed only clarify existing EDG surveillance requirements. No requirements would be added or deleted by these changes; they would only result in more specific and detailed criteria. Further, these changes would not result in any changes to current testing procedures and methodologies. They would merely update the TS to current interpretations and standards. Therefore, the proposed changes do not involve a significant reduction in a margin of safety.

The NRC staff has reviewed the licensee's analysis and, based on this review, it appears that the three standards of 10 CFR 50.92(c) are satisfied. Therefore, the NRC staff proposes to determine that the amendment request involves no significant hazards consideration.

Local Public Document Room location: Hartsville Memorial Library, Home and Fifth Avenues, Hartsville, South Carolina 29550

Attorney for licensee: R. E. Jones, General Counsel, Carolina Power & Light Company, Post Office Box 1551, Raleigh, North Carolina 27602

NRC Project Director: S. Singh Bajwa

Carolina Power & Light Company, et al., Docket No. 50-400, Shearon Harris Nuclear Power Plant, Unit 1, Wake and Chatham Counties, North Carolina

Date of amendment request: July 26, 1993

Description of amendment request: The amendment request would incorporate into Technical Specification 3.7.1.2.b.1 the revised capabilities of the auxiliary feedwater (AFW) system design. The change also updates the Bases for 3.7.1.2 to incorporate the new design capabilities.

Basis for proposed no significant hazards consideration determination: As required by 10 CFR 50.91(a), the licensee has provided its analysis of the issue of no significant hazards consideration, which is presented below:

1. The proposed amendment does not involve a significant increase in the probability or consequences of an accident previously evaluated.

The proposed changes will not adversely affect system performance. The proposed changes have no effect on the probability of occurrence of an accident previously evaluated since the AFW System is not related to the initiation of any analyzed accident. As an engineered safety system, AFW is required to mitigate those events which result in a decrease in secondary side inventory. With the addition of an auto-open feature, which utilizes the same signals as those which automatically start the motor driven pumps, the ability of the AFW System to maintain the heat sink capabilities of the steam generator is not affected. This project does not reduce system/equipment redundancy or independence nor does it have detrimental effects on single failure considerations. Likewise, the deletion of testing the auto-close feature on the AFW pump recirculation line isolation valves has no impact on the AFW System's ability to perform at its design functions.

Therefore, there would be no increase in the probability or consequences of an accident previously evaluated.

2. The proposed amendment does not create the possibility of a new or different kind of accident from any accident previously evaluated.

As stated above, the proposed changes will not adversely affect system performance. No new failure mechanisms are introduced by this change request. This request does not introduce equipment or system operating parameters, configurations, or conditions that are not bounded by current FSAR assumptions. The fail-safe position of the FCVs both before and after the logic change is open. Failure of the control logic to the flow control valves will cause the valves to fail to the open position, providing full flow to the steam generators.

Therefore, the proposed changes do not create the possibility of a new or different kind of accident from any accident previously evaluated.

3. The proposed amendment does not involve a significant reduction in the margin of safety.

The changes described herein do not affect any safety limit and/or limiting safely system setting as governed by the Technical Specifications. The margin of safety for the AFW System as described in the BASES to Technical Specification 3.7.1.2 is not reduced as the pump capacities and the ability to perform a plant cooldown are not affected.

Therefore, the proposed changes do not involve a significant reduction in a margin of safety.

The NRC staff has reviewed the licensee's analysis and, based on this review, it appears that the three standards of 10 CFR 50.92(c) are satisfied. Therefore, the NRC staff proposes to determine that the amendment request involves no significant hazards consideration.

Local Public Document Room location: Cameron Village Regional Library, 1930 Clark Avenue, Raleigh, North Carolina 27605

Attorney for licensee: R. E. Jones, General Counsel, Carolina Power & Light Company, Post Office Box 1551, Raleigh, North Carolina 27602

NRC Project Director: S. Singh Bajwa

Connecticut Yankee Atomic Power Company, Docket No. 50-213, Haddam Neck Plant, Middlesex County, Connecticut

Date of amendment request: July 21, 1993

Description of amendment request: The amendment will revise the Technical Specifications (TS) to remove a footnote from Tables 3.3-9 and 4.3-7. These entries each reference a footnote which states: "Automatic termination of blowdown requirement will become effective upon completion of proposed modification to provide automatic termination." The modification has been completed and the footnote is no longer applicable. The licensee will add a new footnote to the TS for the steam generator blowdown radioactivity monitors which will state that the operability requirements for the monitors are not applicable during Modes 5 and 6.

Basis for proposed no significant hazards consideration determination: As required by 10 CFR 50.91(a), the licensee has provided its analysis of the issue of no significant hazards consideration, which is presented below:

The proposed changes do not involve a significant hazards consideration because the changes would not:

1. Involve a significant increase in the probability or consequences of an accident previously evaluated.

The proposed change to eliminate the footnotes in Technical Specification Tables 3.3-7 and 4.3-9, which state that the requirement regarding the automatic termination of blowdown will become effective when a modification installing the capability is completed, reflects the completion of the plant design change providing this capability. These proposed changes will result in the establishment of minimum operability restrictions and surveillance requirements for the steam generator blowdown line gross radioactivity monitors. Also, the proposed changes to incorporate a footnote to denote that the operability requirements for the steam generator blowdown radioactivity monitors are not applicable during Modes 5 or 6 will permit CYAPCO to meet the intent of Technical Specification 3.3.3.7, and eliminate an unnecessarily restrictive requirement. Therefore, the proposed changes do not involve a significant increase in the probability or consequences of an accident previously evaluated.

2. Create the possibility of a new or different kind of accident from any previously analyzed.

The proposed change to eliminate the footnotes in Technical Specification Tables 3.3-7 and 4.3-9, which state that the requirement regarding the automatic termination of blowdown will become effective when a modification installing the capability is completed, reflects the

completion of the plant design change providing this capability. These proposed changes will result in the establishment of minimum operability restrictions and surveillance requirements for the steam generator blowdown line gross radioactivity monitors. Also, the proposed change to incorporate a footnote to denote that the operability requirements for the steam generator blowdown radioactivity monitors are not applicable during Modes 5 or 6 will permit CYAPCO to meet the intent of Technical Specification 3.3.3.7, and eliminate an unnecessarily restrictive requirement. Therefore, the proposed changes do not create the possibility of a new or different kind of accident from any previously analyzed.

3. Involve a significant reduction in a margin of safety.

The proposed change to eliminate the footnotes in Technical Specification Tables 3.3-7 and 4.3-9, which state that the requirement regarding the automatic termination of blowdown will become effective when a modification installing the capability is completed, reflects the completion of the plant design change providing this capability. These proposed changes will result in the establishment of minimum operability restriction and surveillance requirements for the steam generator blowdown line gross radioactivity monitors, also, the proposed change to incorporate a footnote to denote that the operability requirements for the steam generator blowdown radioactivity monitors are not applicable during Modes 5 or 6 will permit CYAPCO to meet the intent of Technical Specification 3.3.3.7, and eliminate an unnecessarily restrictive requirement. Therefore, the proposed changes do not involve a significant reduction in a margin of safety.

The NRC staff has reviewed the licensee's analysis and, based on this review, it appears that the three standards of 10 CFR 50.92(c) are satisfied. Therefore, the NRC staff proposes to determine that the amendment request involves no significant hazards consideration.

Local Public Document Room location: Russell Library, 123 Broad Street, Middletown, Connecticut 06457.

Attorney for licensee: Gerald Garfield, Esquire, Day, Berry & Howard, Counselors at Law, City Place, Hartford, Connecticut 06103-3499.

NRC Project Director: John F. Stolz

Connecticut Yankee Atomic Power Company, Docket No. 50-213, Haddam Neck Plant, Middlesex County, Connecticut

Date of amendment request: July 26, 1993

Description of amendment request: The amendment will revise Action statement "a" of Technical Specification (TS) Section 3.5.1, "ECCS Subsystems - T_{avg} Greater Than of Equal to 350°F." This change will allow redundant train operability to be verified operable by examination of appropriate plant records rather than performing test of redundant equipment which would render the entire ECCS subsystem inoperable while the testing is being performed.

Basis for proposed no significant hazards consideration determination: As required by 10 CFR 50.91(a), the licensee has provided its analysis of the issue of no significant hazards consideration, which is presented below:

The proposed changes do not involve an SHC [significant hazards consideration] because the changes do not:

1. Involve a significant increase in the probability of consequences of an accident previously evaluated.

The proposed change to Technical Specification 3.5.1 ACTION statement "a" would replace the word "test" to "verify operability of" for the situation where one ECCS subsystem is inoperable. This change only affects the means by which a remaining HPSI [high pressure safety injection] pump, LPSI [low pressure safety injection] pump, or RHR [residual heat removal] pump is judged to be operable. It would not adversely affect the integrity of structures or systems whose loss may otherwise result in the initiation of a design-basis accident such as a LOCA. Neither would the change affect the consequences of an accident. The change to Section 3.5.1 would not affect the performance of the ECCS. Moreover, it would prevent the recurring situation whereby, due to the method of testing these pumps at the Haddam Neck Plant, the opposite train pump(s) is rendered inoperable when testing to fulfill the current requirements of the technical specifications. Rendering both trains of equipment inoperable results in an unnecessary elevated risk configuration at present. During this time of testing, which could be one hour or more, the plant is subjected to a condition where an event (e.g., LOCA) alone could increase the risk of core damage. Therefore, overall risks are minimized by verifying operability by the most prudent means under these circumstances. The consequences of a previously analyzed accident are not increased by the proposed change.

The changes to Technical Specification Sections 4.5.1 and 4.5.2 are proposed to achieve consistency with Section 3.5.1. They would move surveillance requirement 4.5.1b from Technical Specification 3/4.5.1 to Technical Specification 3/4.5.2, and reletter the remaining requirements. No surveillance requirements are changed, therefore, this aspect of the change will not impact the probability or consequences of accidents.

In summary, the proposed changes do not involve a significant increase in the probability or consequences of an accident previously analyzed.

2. Create the possibility of a new or different kind of accident from any previously analyzed.

There is no change to the design of the plant. Only the method of confirming operability of an ECCS subsystem is affected by this proposed change. The failure modes of equipment is not affected. The overall availability of safety-related equipment is improved by not having to unnecessarily enter Technical Specification Section 3.0.3 as a consequence of the current requirement to test the opposite train pump. The changes to Sections 4.5.1 and 4.5.2 also do not create the possibility of a new or different kind of accident previously analyzed.

3. Involved a significant reduction in a margin of safety.

The changes will still require an operability verification if one subsystem were declared inoperable. This would involve an assessment within two hours of the potential cause of the pump being inoperable and a judgment as to the likelihood that the opposite train is similarly affected. The determination of operability can be made by analysis or inspection. Moreover, the wording of the proposed technical specification change does not preclude testing if this is the most prudent course of action. The proposed changes reduce the time that the opposite train is unavailable due to testing. Therefore, the proposed changes do not involve a significant reduction in the margin of safety.

The NRC staff has reviewed the licensee's analysis and, based on this review, it appears that the three standards of 10 CFR 50.92(c) are satisfied. Therefore, the NRC staff proposes to determine that the amendment request involves no significant hazards consideration.

Local Public Document Room location: Russell Library, 123 Broad Street, Middletown, Connecticut 06457.

Attorney for licensee: Gerald Garfield, Esquire, Day, Berry & Howard, Counselors at Law, City Place, Hartford, Connecticut 06103-3499.

NRC Project Director: John F. Stolz

Connecticut Yankee Atomic Power Company (CYAPCO) and Northeast Nuclear Energy Company (NNECO), Docket Nos. 50-213, 50-245, 50-336 and 50-423, Haddam Neck Plant and Millstone Nuclear Power Station, Units 1, 2 and 3, Middlesex County and New London County, Connecticut

Date of amendment request: July 16, 1993

Description of amendment request: The amendments would change the submittal frequency of the Radioactive Effluent Release Report from semiannual to annual to be submitted by May 1 of each year. Also, CYAPCO and NNECO propose to consolidate the Radioactive Effluent Release Report and the Radioactive Effluents Dose Report into a single annual report entitled Radioactive Effluent Report.

Basis for proposed no significant hazards consideration determination: As required by 10 CFR 50.91(a), the licensee has provided its analysis of the issue of no significant hazards

consideration, which is presented below:

The proposed changes do not involve a significant hazards consideration because the changes would not:

1. Involve a significant increase in the probability or consequences of an accident previously evaluated

The proposed changes are being requested to implement a revision to 10CFR50.36a published in the

Federal Register on August 31, 1993[2], to ensure that each of the plant Technical Specifications are consistent with each other, and to consolidate the Radioactive Effluent Release Report and the Radioactive Effluents Dose Report into a single annual report. The proposed changes to the Technical Specifications do not alter any administrative controls over radioactive effluents, nor do they affect any accident evaluations. Also, the proposed changes do not involve any physical alterations to the plants with respect to radioactive effluents. The proposed changes would only affect the reporting requirements concerning routine data for radioactive effluents; thus, the proposed changes cannot affect the probability or consequences of an accident previously evaluated.

2. Create the possibility of a new or different kind of accident from any previously evaluated

The proposed changes are being requested to implement a revision to 10CFR50.36a published in the **Federal Register** on August 31, 1993[2], to ensure that each of the plant Technical Specifications are consistent with each other, and to consolidate the Radioactive Effluent Release Report and the Radioactive Effluents Dose Report into a single annual report. The proposed changes to the Technical Specifications do not alter any administrative controls over radioactive effluents, nor do they involve any physical alterations to the plants with respect to radioactive effluents. Also, the proposed changes do not change the method by which any safety-related system performs its function. The proposed changes would only affect the reporting requirements concerning routine data for radioactive effluents; thus, the proposed changes cannot create the possibility of a new or different kind of accident form any previously evaluated.

3. Involve a significant reduction in a margin of safety

The proposed changes are being requested to implement a revision to 10CFR50.36a published in the **Federal Register** on August 31, 1993[2], to ensure that each of the plant Technical Specifications are consistent with each other, and to consolidate the Radioactive Effluent Release Report and the Radioactive Effluents Dose Report into a single annual report. The proposed changes to the Technical Specifications do not alter any administrative controls over radioactive effluents, nor do they involve any physical alterations to the plants with respect to radioactive effluents. The proposed changes would only affect the reporting requirements concerning routine data for radioactive effluents; thus, the proposed changes cannot involve a significant reduction in a margin of safety.

The NRC staff has reviewed the licensee's analysis and, based on this review, it appears that the three standards of 10 CFR 50.92(c) are satisfied. Therefore, the NRC staff proposes to determine that the amendment request involves no significant hazards consideration.

Local Public Document Room location: Russell Library, 123 Broad Street, Middletown, Connecticut 06457, for the Haddam Neck Plant, and the Learning Resources Center, Thames Valley State Technical College, 574 New London Turnpike, Norwich, Connecticut 06360, for Millstone, Units 1, 2 and 3.

Attorney for licensee: Gerald Garfield, Esquire, Day, Berry & Howard, Counselors at Law, City Place, Hartford, Connecticut 06103-3499.

NRC Project Director: John F. Stolz

Detroit Edison Company, Docket No. 50-341, Fermi-2, Monroe County, Michigan

Date of amendment request: May 24, 1993

Description of amendment request: The proposed amendment would modify the leakage testing requirements for the primary containment isolation valves in the injection flow paths of the Low Pressure Coolant Injection (LPCI) mode of the Residual Heat Removal (RHR) system.

The change eliminates the designation of four current valves as containment isolation valves in Table 3.6.3-1. These valves will still be considered reactor coolant system pressure isolation valves. The proposed change would increase the allowable pressure isolation valve leakage for two valves from 1.0 to 10 gallons per minute (gpm) and reduces the allowable leakage for two other valves from 1.0 gpm to 0.4 gpm. The proposed change would also change the test methodology for two valves to test with water at 1045 plus or minus 10 psig for external leakage only. The amendment application also includes a related 10 CFR Part 50, Appendix J exemption request.

Basis for proposed no significant hazards consideration determination: As required by 10 CFR 50.91(a), the licensee has provided its analysis of the issue of no significant hazards consideration, which is presented below:

The proposed change modifies Containment Local Leak Rate Testing (LLRT) and Pressure Isolation Valve (PIV) testing requirement for valves installed in the Residual Heat Removal (RHR) system Low Pressure Coolant Injection (LPCI) mode injection line. The change does not:

1) Involve a significant increase in the probability or consequences of an accident previously evaluated. The proposed change does not change the physical plant or the manner in which it is operated. The change eliminates certain tests while retaining those necessary to assure that containment systems perform as intended. The new basis for meeting GDC 55 [Reactor Coolant Pressure Boundary Penetrating Containment] provides an equivalent level of protection against off-site radiation release. Therefore, the probability or consequences of any previously analyzed accident has not significantly increased.

2) Create the possibility of a new or different kind of accident from any accident previously evaluated. The proposed change does not involve a change in the plant or the manner in which it is operated. The change eliminates certain tests while retaining those necessary to assure that containment systems perform as intended. No new accident modes are created.

3) Involve a significant reduction in a margin of safety. The change eliminates unnecessary testing which has caused significant radiation exposure and safety hazards [which may result if corrective maintenance is required in the hazardous drywell area where these valves are located]. All systems and structures continue to operate in the same manner as before. Sufficient protection against radiological releases continues to be maintained.

Where the licensee specifies that the change eliminates "unnecessary" testing it should be clarified that the licensee has proposed an alternative testing criterion which it believes meets the intent of Appendix J to 10 CFR Part 50 and will make the current method of testing the affected valves no longer necessary.

The NRC staff has reviewed the licensee's analysis and, based on this review, it appears that the three standards of 10 CFR 50.92(c) are satisfied. Therefore, the NRC staff proposes to determine that the amendment request involves no significant hazards consideration.

Local Public Document Room location: Monroe County Library System, 3700 South Custer Road, Monroe, Michigan 48161

Attorney for licensee: John Flynn, Esq., Detroit Edison Company, 2000 Second Avenue, Detroit, Michigan 48226

NRC Project Director: William M. Dean, Acting

Duke Power Company, et al., Docket Nos. 50-413 and 50-414, Catawba Nuclear Station, Units 1 and 2, York County, South Carolina

Date of amendment request: January 13, 1993, as supplemented January 28 and April 26, 1993

Description of amendment request: The proposed amendments would revise Technical Specifications (TS) 2.2.1, 3/4.1.2.5, 3/4.1.2.6, 3/4.3.3.12, 3/

4.5.1, 3/4.5.4, 3/4.9.2, their associated Bases and TS 6.9.1.9 to relocate the values of certain cycle-dependent limits from the TS to the Core Operating Limits Report (COLR). The NRC issued Generic Letter (GL) 88-16, dated October 4, 1988, that provided guidance to licensees on requests for relocation of the values of cycle-specific parameter limits from the TS to the COLR. The licensee's proposed amendment is its second response to the guidance of that GL. The licensee's first response to the GL was dealt with in Amendment Nos. 74 and 68 for Catawba Units 1 and 2 on May 17, 1990. Therefore, the COLR is already reflected in the Definitions Section of the TS. The licensee's second response to the GL, involving the TS listed above, addressed TS that are different from those addressed in its first response.

The proposed TS would require that the subject core operating limits be determined for each reload cycle in accordance with the referenced NRC approved methodology for these limits and be consistent with the applicable limits of the safety analysis. Finally, this report and any mid-cycle revisions shall be provided to the NRC upon issuance.

Basis for proposed no significant hazards consideration determination: As required by 10 CFR 50.91(a), the licensee has provided its analysis of the issue of no significant hazards consideration, which is presented below:

This proposed amendment will not increase the probability or consequences of an accident which has been previously evaluated. The cycle specific parameters which have been identified for relocation tc the COLR will be calculated using NRC approved methodology and the Technical Specifications will continue to require operation within the cycle specific parameters. For the above reasons this amendment is considered administrative, and does not increase the probability or consequences of an accident previously evaluated.

Operation in accordance with this proposed amendment will not create any failure modes not bounded by previously evaluated accidents. Therefore, this change will not create the possibility of a new or different kind of accident from any kind of accident previously evaluated.

The Technical Specifications will continue to require operation within the bounds of the cycle-specific parameter limits. The cycle-specific parameter limits will be calculated using NRC approved methodology. In addition, each future reload will require a 10 CFR 50.59 safety review to assure that operation of the unit within the cycle-specific limits will not involve a reduction in a margin of safety. Therefore, no margins of safety are affected by the relocation of cycle-specific parameter limits to the COLR.

The NRC staff has reviewed the licensee's analysis and, based on this review, it appears that the three standards of 10 CFR 50.92(c) are satisfied. Therefore, the NRC staff proposes to determine that the amendment request involves no significant hazards consideration.

Local Public Document Room location: York County Library, 138 East Black Street, Rock Hill, South Carolina 29730

Attorney for licensee: Mr. Albert Carr, Duke Power Company, 422 South Church Street, Charlotte, North Carolina 28242

NRC Project Director: David B. Matthews

Duke Power Company, Docket Nos. 50-269, 50-270 and 50-287, Oconee Nuclear Station, Units 1, 2 and 3, Oconee County, South Carolina

Date of amendment request: July 14, 1993

Description of amendment request: The proposed amendments revise Technical Specification 3.1.2.9 to clarify the role of High Pressure Injection and Core Flood Tank deactivation in maintaining pilot operated relief valve operability for low temperature overpressure protection (LTOP), add restrictions regarding applicability of controls which assure 10 minutes are available for operator action to mitigate an LTOP event, revise the Pressure/Temperature limits and associated LTOP setpoints, and make associated administrative changes. Also, the Bases would be revised to be consistent with the above changes.

Basis for proposed no significant hazards consideration determination: As required by 10 CFR 50.91(a), the licensee has provided its analysis of the issue of no significant hazards consideration, which is presented below:

(1) Involve a significant increase in the probability or consequences of an accident previously evaluated:

Each accident analysis addressed within the Oconee Final Safety Analysis Report (FSAR) has been examined with respect to the changes proposed within this amendment request. The probability of any Design Basis Accident (DBA) is not affected by this change, nor are the consequences of a DBA affected by this change, since administrative changes, additional restrictions which assure the ability to mitigate postulated LTOP [low temperature overpressure protection] events, additional restrictions which specify required actions in the event the second LTOP train is not restored as required, revised P/T [pressure/temperature] limits and associated LTOP setpoints based on NRC approved methods, and improved Bases are not considered to be an initiator or contributor to any accident analysis addressed in the Oconee FSAR.

(2) Create the possibility of a new or different kind of accident from any accident previously evaluated:

This license amendment includes administrative changes, additional restrictions which assure the ability to mitigate postulated LTOP events, additional restrictions which specify required actions in the event the second LTOP train is not restored as required, revised P/T limits and associated LTOP setpoints based on NRC approved methods, and improved Bases. Operation of ONS [Oconee Nuclear Station] in accordance with these proposed Technical Specifications will not create any failure modes not bounded by previously evaluated accidents. Consequently, this change will not create the possibility of a new or different kind of accident from any accident previously evaluated.

(3) Involve a significant reduction in a margin of safety:

Changes included in this amendment request will assure the ability to mitigate postulated LTOP events, thus preserving existing margins of safety. Therefore, there will be no significant reduction in any margin of safety.

The NRC staff has reviewed the licensee's analysis and, based on this review, it appears that the three standards of 10 CFR 50.92(c) are satisfied. Therefore, the NRC staff proposes to determine that the amendment request involves no significant hazards consideration.

Local Public Document Room location: Oconee County Library, 501 West South Broad Street, Walhalla, South Carolina 29691

Attorney for licensee: J. Michael McGarry, III, Winston and Strawn, 1200 17th Street, NW., Washington, DC 20036

NRC Project Director: David B. Matthews

Entergy Operations, Inc., Docket Nos. 50-313 and 50-368, Arkansas Nuclear One, Unit Nos. 1 and 2 (ANO-1&2), Pope County, Arkansas

Date of amendment request: July 28, 1993

Description of amendment request: The proposed amendment would revise the Arkansas Nuclear One, Units No. 1 and 2 (ANO-1&2), Technical Specifications (TSs) for the Emergency Cooling Pond (ECP) to achieve consistency between the ANO-1 and ANO-2 TSs and clarify the point at which the water temperature is verified for the ECP. The applicable Bases would also be revised to reflect the changes and clarify the TSs.

Basis for proposed no significant hazards consideration determination: As required by 10 CFR 50.91(a), the licensee has provided its analysis of the issue of no significant hazards

consideration, which is presented below:

Criterion 1 - Does Not Involve a Significant Increase in the Probability or Consequences of an Accident Previously Evaluated.

The Emergency Cooling Pond (ECP) portion of the Ultimate Heat Sink is not an accident initiator. The accident mitigation features of the plant are not affected by the proposed changes. Revising the ANO-1 mode of applicability results in more restrictive controls on ECP operability and assures that the back-up source to the Dardanelle Reservoir is available whenever Service Water is required. The ANO-1 requirements for specified contained water volume and maximum average temperature have been revised to the more restrictive values specified by the ANO-2 TS and provide consistency between ANO-1, ANO-2, and the ECP design basis. Additional limitations and controls have been incorporated in the ANO-1 TS in the form of additional requirements for visual inspection that are currently specified in the ANO-2 TS. Other changes to both the ANO-1 and ANO-2 have been made to clarify the specifications and provide consistency between the two units and are characterized as administrative in nature. The ANO-1 and ANO-2 SARs [safety analysis reports] describe the original analyses associated with the ECP. The changes contained in this submittal are bounded by the existing accident analyses.

Therefore, this change does **not** involve a significant increase in the probability or consequences of any accident previously evaluated.

Criterion 2 - Does Not Create the Possibility of a New or Different Kind of Accident from Any Previously Evaluated.

The changes do not allow the ECP to be operated in any new or different way from what is currently allowed. No design or configuration changes are associated with the proposed changes. The proposed changes provide consistency between ANO-1, ANO-2, and the ECP design basis. The ANO-1 and ANO-2 SARs describe the original analyses associated with the ECP. The changes contained in this submittal are bounded by the existing accident analyses.

Therefore, this change does **not** create the possibility of a new or different kind of accident from any previously evaluated.

Criterion 3 - Does Not Involve a Significant Reduction in a Margin of Safety.

Existing Technical Specification operability and surveillance requirements are not reduced by the proposed change, thus no margins of safety are reduced. Revising the ANO-1 mode of applicability results in more restrictive controls on ECP operability and assures that the back-up source to the Dardanelle Reservoir is available whenever Service Water is required. The ANO-1 requirements for specified contained water volume and maximum average temperature have been revised to the more restrictive values specified by the ANO-2 TS and provide consistency between ANO-1, ANO-2, and the ECP design basis. The addition of TS 4.13.1.4 to the ANO-1 TS constitutes an additional limitation, restriction, or control not presently included in the ANO-1 TS. Other changes to both the ANO-1 and ANO-2 TS have been made to clarify the specifications and provide consistency between the two units and are characterized as administrative in nature. The changes contained in this submittal are bounded by the existing accident analyses and involve no significant reduction in the margin of safety for either ANO-1 or ANO-2.

Therefore, this change does **not** involve a significant reduction in the margin of safety.

The NRC staff has reviewed the licensee's analysis and, based on this review, it appears that the three standards of 10 CFR 50.92(c) are satisfied. Therefore, the NRC staff proposes to determine that the amendment request involves no significant hazards consideration.

Local Public Document Room location: Tomlinson Library, Arkansas Tech University, Russellville, Arkansas 72801

Attorney for licensee: Nicholas S. Reynolds, Esquire, Winston and Strawn, 1400 L Street, N.W., Washington, D.C. 20005-3502

NRC Project Director: Harry Rood (Acting)

Entergy Operations, Inc., Docket No. 50-368, Arkansas Nuclear One, Unit No. 2, Pope County, Arkansas

Date of amendment request: July 22, 1993

Description of amendment request: The proposed amendment would increase the time allowed during plant operation at full power with one Plant Protection System (PPS) channel in bypass, from 48 hours to until the next cold shutdown. The proposed amendment would also incorporate certain editorial changes to maintain consistency between tables and clarify the intent of the technical specifications.

Basis for proposed no significant hazards consideration determination: As required by 10 CFR 50.91(a), the licensee has provided its analysis of the issue of no significant hazards consideration, which is presented below:

Criterion 1 - Does Not Involve a Significant Increase in the Probability or Consequences of an Accident Previously Evaluated.

Operation of the ANO-2 [Arkansas Nuclear One, Unit 2] PPS in a 2-out-of-3 logic mode has no effect on the probability of any accidents previously evaluated as it has no impact on the causes of initiating events in the plant. The proposed change reduces the probability of inadvertent actuations of the PPS due to an inoperable channel being placed in the tripped condition.

Operation of the ANO-2 PPS in a 2-out-of-3 logic mode has no effect on the consequences of an event previously evaluated since, with one channel of each functional unit in bypass, the PPS maintains a functional redundancy of one. This ensures protective system actuation in accordance with the assumptions of the accident analysis. The accident analysis has accounted for those events that might have an effect on the PPS due to the geometry of the plant or the installed sensors, and demonstrated acceptable results in such a case, assuming a single failure. A review of the high energy line break analysis has confirmed that there are no events that would affect a sensor or channel required to mitigate the consequences of a break in that location.

Based on results of these evaluations, extended operation with one PPS channel in bypass will not involve a significant increase in the probability or consequences of an accident previously evaluated.

Operation of the ANO-2 PPS with an inoperable channel of Initiation Logic is allowed by the present ANO-2 Technical Specifications and is not affected by the proposed change. The one-hour Completion Time is consistent with that for the RPS [reactor protection system] Manual Trip. Operation with an inoperable channel of RPS Matrix Logic is not addressed by the current Technical Specifications and Limiting Condition for Operation (LCO) 3.0.3 applies. Including a new Action for RPS Matrix Logic, with a 48-hour restoration time is consistent with industry efforts to improve technical specifications and will not change the operation of the plant in such a manner as to significantly affect the probability or consequences of an accident previously analyzed. The probability of a random failure in a second Matrix Logic channel during any given 48-hour period is low, and is offset by the decreased risk from avoiding a forced shutdown on short notice.

Operations of the ESFAS [engineered safety feature actuation system] with a failed channel of Initiation, Matrix, or Actuation Logic is not addressed by the current ANO-2 Technical Specifications and LCO 3.0.3 applies. Addition of requirements for the ESFAS Logic with a 48-hour restoration time is consistent with industry efforts to improve technical specifications and will not change the operation of the plant in such a manner as to significantly affect the probability or consequences of an accident previously analyzed. The probability of a random failure in a second ESFAS channel during any given 48-hour period is low, and is offset by the decreased risk from avoiding a forced shutdown on short notice.

The proposed editorial changes will have no effect on plant operation and therefore will not involve a significant increase in the probability or consequences of an accident previously evaluated.

Therefore, this change does **not** involve a significant increase in the probability or consequences of an accident previously evaluated.

Criterion 2 - Does Not Create the Possibility of a New or Different Kind of Accident from any Previously Evaluated.

The only way the proposed change could alter the course of an event would be by the PPS failing to actuate when required. The attached analysis demonstrates that the PPS maintains a functional redundancy of one when operating in a 2-out-of-3 logic mode, thus the PPS will not fail in this manner. Therefore the attached analysis demonstrates

that there is no possibility of this change creating the possibility of a new or different kind of accident.

Based on results of these evaluations, extended operation with one PPS channel in bypass will not create the possibility of a new or different kind of accident from any accident previously evaluated.

The RPS Matrix Logic is not addressed in the current ANO-2 Technical Specification, nor is (any of) the ESFAS Logic. The proposed change clarifies ACTIONs in accordance with the Technical Specifications for recent Combustion Engineering-designed plants (e.g., Palo Verde) and is consistent with industry efforts to improve technical specifications. No new method of operating the plant is created by this proposed change to add these new requirements to the RPS and ESFAS Logic; the only change being to allow operation with an inoperable channel of Logic for slightly longer than is currently permitted. Therefore, addition of the new specifications for the RPS and ESFAS Logic will not create the possibility of a new or different kind of accident from any previously evaluated.

The proposed editorial changes will have no effect on plant operation and therefore will not create the possibility of a new or different kind of accident from any accident previously evaluated.

Therefore, this change does **not** create the possibility of a new or different kind of accident from any previously evaluated.

Criterion 3 - Does Not Involve a Significant Reduction in the Margin of Safety.

The ANO-2 PPS was originally designed as a 2-out-of-3 logic system with an additional channel as an installed spare. However, the plant was originally licensed as a 2-out-of-4 PPS logic plant. The proposed change provides the justification for allowing operation in a 2-out-of-3 logic mode. Review of the design and installation of the PPS has demonstrated that, while operating in a 2-out-of-3 logic mode, the functional redundancy of the PPS is one. For any design bases event, with the occurrence of any postulated single failure, the PPS will provide the protection assumed in the accident analysis. Therefore, there is no significant reduction in a margin of safety due to the proposed change to allow operation in a 2-out-of-3 logic mode.

Operation of the ANO-2 PPS with a more detailed breakout of the portions of the PPS logic will not result in any closer approach to the acceptance criteria by the consequences of any anticipated operational occurrence or accident previously evaluated. Therefore, there is no decrease in the margin of safety due to the proposed change.

The proposed editorial changes will have no effect on plant operation and therefore will not involve a significant reduction in a margin of safety.

Therefore, this change does **not** involve a significant reduction in the margin of safety.

Based upon the reasoning presented above and the previous discussion of the amendment request, Entergy Operations has determined that the requested change does **not** involve a significant hazards consideration.

The NRC staff has reviewed the licensee's analysis and, based on this review, it appears that the three standards of 10 CFR 50.92(c) are satisfied. Therefore, the NRC staff proposes to determine that the amendment request involves no significant hazards consideration.

Local Public Document Room location: Tomlinson Library, Arkansas Tech University, Russellville, Arkansas 72801

Attorney for licensee: Nicholas S. Reynolds, Esquire, Winston and Strawn, 1400 L Street, N.W., Washington, D.C. 20005-3502

NRC Project Director: Harry Rood, Acting Director

Entergy Operations, Inc., Docket No. 50-368, Arkansas Nuclear One, Unit No. 2, Pope County, Arkansas

Date of amendment request: July 22, 1993

Description of amendment request: The proposed amendment would remove the cycle-specific variables from the Technical Specifications and control them under a new document called the Core Operating Limits Report (COLR), in accordance with Generic Letter 88-16. The proposed amendment would also revise the definition of shutdown margin in Technical Specification 1.13 to achieve consistency with NUREG-1432, Revision 0, "Revised Standard Technical Specifications [RSTS] for CE [Combustion Engineering] Plants."

Basis for proposed no significant hazards consideration determination: As required by 10 CFR 50.91(a), the licensee has provided its analysis of the issue of no significant hazards consideration, which is presented below:

Criterion 1 - Does Not Involve a Significant Increase in the Probability or Consequences of an Accident Previously Evaluated

The removal of cycle dependent variables from Technical Specifications and placing them into a COLR has no impact on plant operation or accident analyses since the proposed changes are administrative in nature. The Technical Specifications will continue to require operation within the core operational limits for each cycle reload calculated by the approved reload design methodologies. The appropriate actions required if limits are violated will remain in the Technical Specifications. The values or setpoints placed in the COLR are addressed in the reload report. The reload report presents the results of a cycle-specific evaluation of accidents addressed in the ANO-2 [Arkansas Nuclear One, Unit 2] SAR [safety analysis report]. The cycle-specific evaluation demonstrates that changes in the fuel cycle design and the corresponding COLR do not involve a significant increase in the probability or consequences of an accident previously evaluated. Therefore, the removal of cycle dependent variables from Technical Specification[s] does not involve a significant increase in the probability or consequences of an accident previously evaluated.

Changing the definition of shutdown margin to be consistent with RSTS allows the use of an all CEAs [control element assemblies] inserted shutdown margin. The proposed change has no impact on the safety analyses because all CEAs will be verified fully inserted by two independent means, prior to not accounting for the single CEA of the highest reactivity worth fully withdrawn in the shutdown margin calculation. Therefore, the shutdown margin definition revision does not involve a significant increase in the probability or consequences of an accident previously evaluated.

Criterion 2 - Does Not Create the Possibility of a New or Different Kind of Accident from any Accident Previously Evaluated.

The proposed changes to relocate the cycle-specific variables from Technical Specifications to the COLR are administrative in nature. No change in the design, configuration, or method of operation of the plant is made by this amendment. The cycle-specific variables will continue to be calculated using NRC approved methods. Technical Specifications will continue to require operation within the required core operating limits and appropriate actions will be taken if the limits are exceeded. Therefore, the removal of cycle-specific variables does not create the possibility of a new or different kind of accident from any accident previously evaluated.

Changing the definition of shutdown margin does not introduce any new plant equipment or change the current plant design; therefore, the shutdown margin definition revision does not create the possibility of a new or different kind of accident from any accident previously evaluated.

Criterion 3 - Does Not Involve a Significant Reduction in a Margin of Safety.

Existing Technical Specification operability and surveillance requirements are not reduced by the proposed changes to relocate cycle-specific parameters to another document. The development of limits for a particular cycle will still conform to methods described in NRC approved documentation. The Technical Specifications still require that the core be operated within these limits and specify appropriate actions to be taken if the limits are violated. The cycle-specific COLR limits for future reloads will also be developed based on NRC approved methodologies. Each reload will involve a 10CFR50.59 safety review to assure that operation of the unit within the cycle-specific limits will not involve a significant reduction in a margin of safety. Therefore, the proposed change does not involve a significant reduction in a margin of safety.

Changing the definition of shutdown margin to be consistent with RSTS allows the use of an all CEAs inserted shutdown margin. This change does not decrease the margin to safety since all CEAs will be verified fully inserted by two independent means, prior to not accounting for the single CEA of the highest reactivity worth in the shutdown margin calculation.

Therefore, based on the reasoning presented above and the previous discussion

of this amendment request, Entergy Operations has determined that the requested changes do not involve a significant hazards consideration.

The NRC staff has reviewed the licensee's analysis and, based on this review, it appears that the three standards of 10 CFR 50.92(c) are satisfied. Therefore, the NRC staff proposes to determine that the amendment request involves no significant hazards consideration.

Local Public Document Room location: Tomlinson Library, Arkansas Tech University, Russellville, Arkansas 72801

Attorney for licensee: Nicholas S. Reynolds, Esquire, Winston and Strawn, 1400 L Street, N.W., Washington, D.C. 20005-3502

NRC Project Director: Harry Rood (Acting)

Entergy Operations, Inc., Docket No. 50-368, Arkansas Nuclear One, Unit No. 2, Pope County, Arkansas

Date of amendment request: July 22, 1993

Description of amendment request: The proposed amendment would relocate the containment isolation valve table from the containment systems specification to plant procedures, in accordance with Generic Letter (GL) 91-08.

Basis for proposed no significant hazards consideration determination: As required by 10 CFR 50.91(a), the licensee has provided its analysis of the issue of no significant hazards consideration, which is presented below:

Criterion 1 - Does Not Involve a Significant Increase in the Probability or Consequence[s] of an Accident Previously Evaluated.

Removal of Table 3.6-1 and replacement of associated references with explicit descriptions of affected components ensures that the TS [technical specification] requirements apply to all valves classified as containment isolation valves by the plant licensing basis. Since the existing TS operability and surveillance requirements, and the components to which they apply are not reduced, this change does **not** significantly increase the probability or consequence[s] of any previously analyzed accident.

The footnote added to TS 3.6.3.1 allows all valves with the locked or sealed closed feature to be opened under administrative controls. The existing note to Table 3.6-1 identifies specific valves that may be opened under administrative controls. This change allows all locked or sealed closed containment isolation valves to be opened under administrative controls to ensure that the affected component will perform its design function if necessary. These valves are not accident initiating components and do not increase the probability of an accident previously evaluated. Since the imposed operability restrictions ensure that these valves will be closed in the event of an accident, this change does **not** significantly increase the probability or consequence[s] of any previously analyzed accident.

Since deletion of the footnote identifying valves not subject to "Type C" testing, does not alter TS operability or surveillance requirements, this change does **not** significantly increase the probability or consequence[s] of any previously analyzed accident.

The valve isolation time requirements in TS 3.6.3.1 and Table 3.6-1 are redundant to the inservice testing required by TS 4.0.5 to verify stroke times of containment isolation valves. Since the TS 4.0.5 requirements to verify stroke times are unaffected, this change does **not** significantly increase the probability or consequence[s] of any previously analyzed accident.

The changes to Renumber pages: 3/4 6-22, 3/4 6-23 and 3/4 6-24 and to correct the grammatical error in TS 1.8.1 do not alter TS requirements and are administrative in nature. Since these changes are administrative in nature they do **not** significantly increase the probability or consequence[s] of any previously analyzed accident.

The Bases change clarifies the administrative controls required to open locked or sealed closed valves and references the procedure in which the new containment isolation valve table will be located. Since this change does not affect reactor operations or accident analyses, and has no radiological consequences, this change does **not** significantly increase the probability or consequence[s] of any previously analyzed accident.

Based on the discussions presented above, Entergy Operations has determined that these changes do **not** significantly increase the probability or consequence[s] of previously analyzed accident.

Criterion 2 - Does Not Create the Possibility of a New or Different Kind of Accident from Any Previously Evaluated.

The deletion of Table 3.6-1 and its associated references does not alter the operability or surveillance requirements of ANO-2 [Arkansas Nuclear One, Unit No. 2] TS. Since the design, configuration, and method of operation of the plant are not affected, this change does **not** create the possibility of a new or different kind of accident from any previously evaluated.

Since the footnote added to TS 3.6.3.1 does not establish a potential new accident precursor, this change does not create the possibility of a new or different kind of accident from any previously evaluated.

Deletion of the isolation time requirements in TS 3.6.3.1 and Table 3.6-1 does not change the design, configuration or method of operation of the plant. This change does not alter the TS requirements for verifying containment isolation valve stroke times. Since the requirements are unaltered, this change does **not** create the possibility of a new or different kind of accident from any previously evaluated.

The changes to Renumber pages 3/4 6-22, 3/4 6-23 and 3/4 6-24, to update the Index, and to correct grammatical error in TS 1.8.1 do not alter TS requirements and are administrative in nature. Since these change[s] are administrative in nature they do **not** create the possibility of a new or different kind of accident from any previously evaluated.

The proposed Bases changes clarify the TS requirements. These changes do not introduce any new mode of plant operation and therefore, do

not create the possibility of a new or different kind of accident from any previously evaluated.

Based on the discussions presented above, Entergy Operations has determined that these changes do **not** create the possibility of a new or different kind of accident from any previously evaluated.

Criterion 3 - Does Not Involve a Significant Reduction in a Margin of Safety.

Since the deletion of Table 3.6.1 and its associated references does **not** reduce existing TS operability and surveillance requirements, this change does not involve a significant reduction in a margin of safety.

Current TS allow the use of administrative controls as provisional measures to be taken while opening specific locked or sealed closed valves. This change extends the use of these controls to similar valves. Since the administrative controls required when these valves are opened, ensure that the valve will be closed in the event of an accident, this change does **not** involve a significant reduction in a margin of safety. The staff has reviewed this change and concludes in GL 91-08 that it is an acceptable alternative to identifying specific valves that may be opened under administrative controls.

Since deletion of the footnote to Table 3.6.1, identifying valves not subject to "Type C" testing, and deletion of the isolation time requirements in TS 3.6.3.1 and Table 3.6-1 do not reduce existing operability or surveillance requirements, this change does **not** involve a significant reduction in a margin of safety.

The administrative changes to Renumber pages: 3/4 6-22, 3/4 6-23 and 3/4 6-24, to update the Index, and to correct the grammatical error in TS 1.8.1 do not alter TS requirements. Since these change[s] are administrative in nature they do **not** involve a significant reduction in a margin of safety.

The proposed Bases changes clarify the TS requirements. Since these changes do not affect a safety limit, an LCO [limiting condition for operation], or a surveillance requirement, this change does not involve a significant reduction in a margin of safety.

Based on the discussions presented above, Entergy Operations has determined that these changes do **not** involve a significant reduction in a margin of safety.

Therefore, based upon the reasoning presented above and the previous discussion of the amendment request, Entergy Operations has determined that the requested changes do **not** involve a significant hazards consideration.

The NRC staff has reviewed the licensee's analysis and, based on this review, it appears that the three standards of 10 CFR 50.92(c) are satisfied. Therefore, the NRC staff proposes to determine that the

amendment request involves no significant hazards consideration.

Local Public Document Room location: Tomlinson Library, Arkansas Tech University, Russellville, Arkansas 72801

Attorney for licensee: Nicholas S. Reynolds, Esquire, Winston and Strawn, 1400 L Street, N.W., Washington, D.C. 20005-3502

NRC Project Director: Harry Rood (Acting)

Entergy Operations, Inc., et al., Docket No. 50-416, Grand Gulf Nuclear Station, Unit 1, Claiborne County, Mississippi

Date of amendment request: July 14, 1993

Description of amendment request: This amendment will eliminate previous restrictions on ensuring operability of igniters in enclosed areas and igniters located in open areas adjacent to inoperable igniters. This amendment will also redefine the Hydrogen Ignition System as operable based solely on subsystem status. Additionally, the amendment proposes to remove certain lists of components from the Grand Gulf Nuclear Station (GGNS) Technical Specifications (TS) and changes to the TS and the TS Bases in accordance with NRC guidance provided in Generic Letter 91-08.

Basis for proposed no significant hazards consideration determination: As required by 10 CFR 50.91(a), the licensee has provided its analysis of the issue of no significant hazards consideration, which is presented below:

1. No significant increase in the probability or consequences of an accident previously evaluated results from this change.

The proposed changes would result in the deletion of specified tables from the Technical Specification[s] (TS), as well as modification of TS and Bases as recommended by Generic Letter (GL) 91-08, and in accordance with Appendix A of the Generic Mark III Containment Hydrogen Control Safety Evaluation Report (SER). The tables to be deleted list plant components by division, location, and circuit. The component lists affected are: Hydrogen Igniter Circuits (Table 3.6.7.2-1); Hydrogen Igniters and Locations (Table 3.6.7.2-2); and Number of Igniters by Circuits (Table 4.6.7.2-1). Plant procedures will reflect relocation of the information included in each table specified above. Any changes to this information will be accomplished in accordance with the administrative controls required by TS 6.8 and 6.5.3. These controls ensure that there will be no increase in the probability or consequences of previously evaluated accidents without prior NRC approval.

Operability and surveillance requirements are revised to reflect generically acceptable requirements as described in the Generic SER. Accident analyses which assume hydrogen generation following a LOCA [loss-of-coolant accident] are not affected. There will be no modifications to plant equipment as a result of the proposed changes.

The hydrogen igniters are passive devices which would be actuated after initiation of a postulated accident. There is no known influence of the Hydrogen Ignition System (HIS) upon the probability of occurrence of the postulated accidents evaluated in the Hydrogen Control Program. Test results described in (3) below also demonstrate that no significant increase in the consequences of previously evaluated accident scenarios would be expected as a result of this change. Therefore, no significant increase in the probability or consequences of an accident previously evaluated will result from these changes.

2. This change would not create the possibility of a new or different kind of accident from any accident previously evaluated.

The relocation of information from TS tables into plant procedures serves only to consolidate information on affected components outside of the TS for control under appropriate administrative requirements. This is accomplished via the guidance of GL 91-08. The proposed revisions to the TS do not involve a change in the manner in which these components will be operated, maintained, or monitored. No components or systems are physically added, removed, or modified a result of the proposed changes.

The surveillance frequency in the proposed TS is consistent with the present TS and with the Generic Hydrogen Control SER. Use of current/voltage measurements to determine the operability of igniters in inaccessible ares of containment is consistent with the SER and the present current technical specifications, and it minimizes personnel exposure to radiation and other occupational safety hazards.

This TS change does not affect the GGNS emergency operating procedures for the HIS, which are symptomatically based and are intended to encompass the conditions for a wide spectrum of accident conditions. The TS change creates no known possibility of a new or different kind of accident from those previously evaluated.

3. This change would not involve a significant reduction in a margin of safety.

The proposed revisions are being requested as a line item improvement to the Grand Gulf Nuclear Station (GGNS) TS to reduce the administrative burden on the NRC and GGNS when revisions to the subject component information become necessary. They are consistent with the guidance of GL 91-08 and the Generic SER for the Hydrogen Ignition System. The margin of safety associated with these components lists is unaffected by this proposed change since the operability and surveillance requirements are in accordance with the Generic SER. Additionally, the information from these tables is currently included in plant procedures which ensure that changes made are reviewed in accordance with the controls of TS 6.8 and 6.5.3. These provisions allow no decrease in the margin of safety without prior NRC approval.

In GGNS plant-specific 1/4-scale testing, igniters were placed in the test facility at locations which correlated as closely as possible to igniter locations in the plant. In 1/4-scale tests, the igniters in enclosed areas and the second ring of igniters in the containment dome were not simulated. In addition, two other igniters in the containment dome were inoperable for the majority of the test program. Using this very conservative model, hydrogen concentrations were always maintained near the lower flammability limit, demonstrating that the HIS would control hydrogen as designed.

Furthermore, during an HCOG [Hydrogen Control Owners Group] scoping test, all Division I igniters and several Division II igniters were secured. In an igniter location configuration which was similar to Grand Gulf's, this resulted in a very limited number of igniters being used to simulate the actual number of igniters in the Grand Gulf containment. In this configuration, the ignition time was approximately the same as with the full complement of igniters. No delay in ignition was observed, nor did the combustion phenomena differ. The results of this test provide substantial confidence that the proposed TS, which would require that at least 90% igniters in the containment be operable, is very conservative and does not reduce the necessary margin of safety.

Since igniters in enclosed areas were not simulated, the 1/4-scale test results demonstrate that relaxation of the technical specifications with regard to the adjacent igniter provisions is acceptable and would not reduce the margin of safety inherent in the containment system and the hydrogen ignition system design and operation. Therefore this change, as proposed, does not involve a significant reduction in the margin of safety.

The NRC staff has reviewed the licensee's analysis and, based on this review, it appears that the three standards of 10 CFR 50.92(c) are satisfied. Therefore, the NRC staff proposes to determine that the amendment request involves no significant hazards consideration.

Local Public Document Room location: Judge George W. Armstrong Library, Post Office Box 1406, S. Commerce at Washington, Natchez, Mississippi 39120

Attorney for licensee: Nicholas S. Reynolds, Esquire, Winston and Strawn, 1400 L Street, N.W., 12th Floor, Washington, DC 20005-3502

NRC Project Director: Harry Rood (Acting)

Entergy Operations, Inc., et al., Docket No. 50-416, Grand Gulf Nuclear Station, Unit 1, Claiborne County, Mississippi

Date of amendment request: August 11, 1993

Description of amendment request: The proposed amendment would amend Technical Specification (TS) 3/4.3.7.10, entitled "Loose Part Detection System,"

by relocating Loose Part Detection Instrumentation from the TSs to other controlled documents maintained by the licensee under administrative control and subject to the review required by the requirements of 10 CFR 50.59.

Basis for proposed no significant hazards consideration determination: As required by 10 CFR 50.91(a), the licensee has provided its analysis of the issue of no significant hazards consideration, which is presented below:

1. The proposed change does not significantly increase the probability or consequences of an accident previously evaluated.

The proposed change relocates Loose-Part Detection System Instrumentation requirements from the TS to plant administrative control consistent with the NRC Interim Policy Statement on Technical Specification Improvements. Criterion 1 of the Policy Statement indicates that the TS should include installed instrumentation that is used to detect, and indicate in the control room, a significant degradation of the reactor coolant pressure boundary. This criterion is intended to ensure that the TS control those instruments specifically installed to detect excessive reactor coolant system leakage. This criterion is not interpreted to include instrumentation used to detect precursors to reactor coolant pressure boundary leakage (e.g., Loose Part Detection Instrumentation). The proposed change does not affect any material condition of the plant that could directly contribute to causing or mitigating the effects of an accident. Therefore, the proposed change will not involve a significant increase in the probability or consequences of any accident previously evaluated.

2. This change would not create the possibility of a new or different kind of accident from any previously analyzed.

The proposed change which does not involve any plant design changes (i.e., administrative only) will be adequately controlled by the 10CFR50.59 process which would not allow requirement or system modifications which would place the plant in an unanalyzed condition. The proposed change will not alter the operation of the plant or the manner in which it is operated. Therefore, the proposed change will create the possibility of a new or different kind of accident from any previously evaluated.

Further, the evaluation summarized in NEDO-31466 determined the loss of this instrumentation to be a non-significant risk contributor to core damage frequency and offsite release.

3. This change would not involve a significant reduction in the margin of safety.

The system maintenance history reveals that the reliability of the system is adequately demonstrated by the low failure rate of system components.

The proposed change will relocate Loose Part Detection System instrumentation from the TS to our administrative control. The proposed change will have no adverse impact on the reactor coolant system pressure boundary nor will any other system protective boundary or safety limit be affected. Therefore, the proposed change will not involve a significant reduction in a margin of safety.

The NRC staff has reviewed the licensee's analysis and, based on this review, it appears that the three standards of 10 CFR 50.92(c) are satisfied. Therefore, the NRC staff proposes to determine that the amendment request involves no significant hazards consideration.

Local Public Document Room location: Judge George W. Armstrong Library, Post Office Box 1406, S. Commerce at Washington, Natchez, Mississippi 39120

Attorney for licensee: Nicholas S. Reynolds, Esquire, Winston and Strawn, 1400 L Street, N.W., 12th Floor, Washington, DC 20005-3502

NRC Project Director: Harry Rood (Acting)

Entergy Operations, Inc., et al., Docket No. 50-416, Grand Gulf Nuclear Station, Unit 1, Claiborne County, Mississippi

Date of amendment request: August 11, 1993

Description of amendment request: The proposed amendment would amend the Grand Gulf Nuclear Station (GGNS) Technical Specifications (TS) to support compliance with the new requirements of Title 10 Code of Federal Regulations Part 20 and Part 50.36a.

Basis for proposed no significant hazards consideration determination: As required by 10 CFR 50.91(a), the licensee has provided its analysis of the issue of no significant hazards consideration, which is presented below:

1. The proposed changes do not significantly increase the probability or consequences of an accident previously evaluated.

The proposed revisions to the liquid and gaseous release rate limits and the relocation of the old 10CFR20.106 requirements to the new 10CFR20.1302 and the revision to the TS Bases for the Liquid Holdup Tank activity limit will involve no change in the types or amounts of effluents that will be released, nor will there be an increase in individual or cumulative occupational radiation exposures.

The changes of definitions, terminology, paragraph references, and report submittal frequency are necessary to keep GGNS Technical Specifications consistent with revised federal regulations (i.e. 10CFR20 and 10CFR50.36a). Record retention and reporting requirements will continue to meet NRC regulations. These changes are administrative in nature and do not affect plant hardware or operation.

Decreasing the distance at which radiation measurements are taken is conservative, and will result in higher measured dose rates for a given radiological source. This change is required by the revised 10CFR20.

Based on the above, the proposed changes do not significantly increase the probability or consequences of an accident previously evaluated.

2. The proposed changes would not create the possibility of a new or different kind of accident from any previous[ly] analyzed.

The proposed changes will not affect plant equipment or operation, nor will they result in a change to the configuration of any plant equipment. There will be no change in the types or increase in the amount of effluents released offsite. Therefore, these changes will not create the possibility of a new or different kind of accident from any previously evaluated.

3. The proposed changes do not involve a significant reduction in a margin of safety.

The proposed revisions do not involve any changes in the types or increases in the amounts of effluents released offsite. The methodology used to control radioactive effluents and calculate effluent monitor setpoints will result in the same effluent release rate as the current methodology. The basic requirements for TS concerning effluent releases (10CFR50.36a) indicate that compliance with TS will keep average annual releases to small percentages of 10CFR20 limits. For liquid effluent releases, the annual dose of 500 mrem, upon which the concentrations in the old 10CFR20 are based, is a factor of 10 higher than the annual dose upon which the concentrations in the new 10CFR20 are based. The 50.36a requirements further indicate that operational flexibility is allowed, compatible with considerations of health and safety, which may temporarily result in releases higher than such small percentages, but still within the limits specified in the old 10CFR20.106 which references Appendix B maximum permissible concentrations (MPCs). For gaseous effluent releases, the limits associated with the gaseous release rate TS will be maintained at the current instantaneous dose rate limits. Compliance with the limits of the new 10CFR20.1301 will be demonstrated by operating within the limits of 10CFR50, Appendix I and 40CFR190.Use of a shorter measurement distance for determining high radiation areas is a conservative change, and will not result in an increase in individual or cumulative occupational exposures.

The administrative changes are necessary to keep GGNS Technical Specifications consistent with revised federal regulations. Record retention and reporting requirements will continue to meet NRC regulations. These changes will not affect plant hardware, operation, or configuration.

Therefore, the proposed changes will not involve a significant reduction in a margin of safety.

The NRC staff has reviewed the licensee's analysis and, based on this review, it appears that the three standards of 10 CFR 50.92(c) are satisfied. Therefore, the NRC staff proposes to determine that the amendment request involves no significant hazards consideration.

Local Public Document Room location: Judge George W. Armstrong

Library, Post Office Box 1406, S. Commerce at Washington, Natchez, Mississippi 39120

Attorney for licensee: Nicholas S. Reynolds, Esquire, Winston and Strawn, 1400 L Street, N.W., 12th Floor, Washington, DC 20005-3502

NRC Project Director: Harry Rood (Acting)

Entergy Operations, Inc., et al., Docket No. 50-416, Grand Gulf Nuclear Station, Unit 1, Claiborne County, Mississippi

Date of amendment request: August 11, 1993

Description of amendment request: The proposed amendment would amend the Grand Gulf Nuclear Station Technical Specifications Section 3/4.3.7.5, entitled "Accident Monitoring Instrumentation," by relocating certain accident monitoring instrumentation from the Technical Specifications to other controlled documents maintained by the licensee under administrative control and subject to the review required by 10 CFR 50.59.

Basis for proposed no significant hazards consideration determination: As required by 10 CFR 50.91(a), the licensee has provided its analysis of the issue of no significant hazards consideration, which is presented below:

1. Does the change involve a significant increase in the probability or consequences of an accident previously evaluated?

The proposed change relocates accident monitoring instrumentation not designated as R.G. [Regulatory Guide] 1.97 Category I or Type A from the Technical Specifications to plant administrative control, consistent with the NRC Interim Policy Statement on Technical Specification Improvement. Criterion 1 of the Policy Statement indicates that the Technical Specifications should include installed instrumentation that is used to detect, and indicate in the control room, a significant abnormal degradation of the reactor coolant pressure boundary. This criterion is intended to ensure that the technical specifications control those instruments specifically installed to detect excessive reactor coolant system leakage. This criterion is not interpreted to include instrumentation used to detect precursors to reactor coolant pressure boundary leakage (i.e., non-category 1 or non-type A Reg. Guide. 1.97 variables). The proposed change does not affect any material condition of the plant that could directly contribute to causing or mitigating the effects of an accident.

The applicable surveillance requirements (operability testing, channel checks, and calibration requirements) proposed for relocation will be adequately controlled via the administrative requirements of Technical Specification[s] 6.8 and 6.5.3. Those requirements include review of changes for unreviewed safety questions in accordance with the provisions of 10CFR50.59. The requirements of 10CFR50.59 include a review of the evaluated change for impact on the probability of an accident previously evaluated. The requirements of 10CFR50.59 prevent any evaluated change which increases the probability or consequences of an accident previously evaluated from being made without prior NRC approval. These changes, therefore constitute an administrative revision only.

Therefore, this change does not significantly increase the probability or consequences of a previously evaluated accident.

2. Does the change create the possibility of a new or different kind of accident from any accident previously evaluated?

The proposed change will not involve any plant design change. The proposed change will not alter the operation of the plant or the manner in which it is operated (i.e., administrative only). Therefore, the proposed change will not create the possibility of a new or different kind of accident from any accident previously evaluated.

The information proposed for relocation will be adequately controlled via the administrative requirements of Technical Specification[s] 6.8 and 6.5.3. Those requirements include review of changes for unreviewed safety questions in accordance with the provisions of 10CFR50.59. The requirements of 10CFR50.59 include a review of the evaluated change for impact on the probability of an accident previously evaluated. The requirements of 10CFR50.59 prevent any evaluated change which increases the probability or consequences of an accident previously evaluated from being made without prior NRC approval. These changes, therefore constitute an administrative revision only.

Therefore, it does not create the possibility of a new or different kind of accident from any accident previously evaluated.

3. Does this change involve a significant reduction in a margin of safety?

The proposed change relocates accident monitoring instrumentation that is not designated as R. G. 1.97 Category I or Type A from the Technical Specifications to plant administrative control. The proposed change will have no adverse impact on the reactor coolant system pressure boundary nor will any other system protective boundary or safety limit be affected. Accident monitoring instrumentation that is designated as Category I or Type A are being retained in the technical specifications.

The information proposed for relocation will be adequately controlled via the administrative requirements of Technical Specification[s] 6.8 and 6.5.3. Those requirements include review of changes for unreviewed safety questions in accordance with the provisions of 10CFR50.59. The requirements of 10CFR50.59 include a review of the evaluated change for impact on the probability of an accident previously evaluated. The requirements of 10CFR50.59 prevent any evaluated change which increases the probability or consequences of an accident previously evaluated from being made without prior NRC approval. These changes, therefore constitute an administrative revision only.

Therefore, the proposed change will not involve a significant reduction in a margin of safety.

The NRC staff has reviewed the licensee's analysis and, based on this review, it appears that the three standards of 10 CFR 50.92(c) are satisfied. Therefore, the NRC staff proposes to determine that the amendment request involves no significant hazards consideration.

Local Public Document Room location: Judge George W. Armstrong Library, Post Office Box 1406, S. Commerce at Washington, Natchez, Mississippi 39120

Attorney for licensee: Nicholas S. Reynolds, Esquire, Winston and Strawn, 1400 L Street, N.W., 12th Floor, Washington, DC 20005-3502

NRC Project Director: Harry Rood (Acting)

Florida Power and Light Company, et al., Docket Nos. 50-335 and 50-389, St. Lucie Plant, Unit Nos. 1 and 2, St. Lucie County, Florida

Date of amendment request: July 23, 1993

Description of amendment request: Pursuant to 10 CFR 50.90, Florida Power & Light Company (FPL) requests to amend Facility Operating Licenses DPR-67 and NPF-16 for St. Lucie Units 1 and 2, respectively. The proposed amendments are necessary as a result of the new Standards for Protection Against Radiation (10 CFR 20). It is requested that the proposed amendments be issued with an implementation date that coincides with 10 CFR 20.1008.

Basis for proposed no significant hazards consideration determination: As required by 10 CFR 50.91(a), the licensee has provided its analysis of the issue of no significant hazards consideration, which is presented below:

Pursuant to 10 CFR 50.92, a determination may be made that a proposed license amendment involves no significant hazards consideration if operation of the facility in accordance with the proposed amendment would not: (1) involve a significant increase in the probability or consequences of an accident previously evaluated; or (2) create the possibility of a new or different kind of accident from any accident previously evaluated; or (3) involve a significant reduction in a margin of safety. Each standard is discussed as follows.

1. Operation of the facility in accordance with the proposed amendment would not involve a significant increase in the probability or consequences of an accident previously evaluated.

Revisions to the St. Lucie Units 1 and 2 Technical Specifications, proposed in this submittal, are consistent with the regulations of the new 10 CFR Part 20. The changes being

proposed are administrative in nature to revise definitions, 10 CFR 20 references and area classifications. These changes are necessary to ensure compliance with the new 10 CFR Part 20 requirements. Assumptions, methods and conclusions contained in the plant safety analyses have not been altered.

Therefore, operation of the facility in accordance with the proposed amendment will not involve a significant increase in the probability or consequences of an accident previously evaluated.

2. Operation of the facility in accordance with the proposed amendment would not create the possibility of a new or different kind of accident from any accident previously evaluated.

The proposed amendment will not change the physical plant, the configuration or method of operation of any plant equipment or the modes of plant operation defined in the Facility License. Therefore, operation of the facility in accordance with the proposed amendment would not create the possibility of a new or different kind of accident from any accident previously evaluated.

3. Operation of the facility in accordance with the proposed amendment would not involve a significant reduction in a margin of safety.

The changes proposed to the St. Lucie Unit 1 and 2 Technical Specifications are administrative in nature and assure compliance with the new 10 CFR Part 20. The existing levels of radiological control will not be reduced by these proposed changes and compliance with applicable regulatory requirements governing radioactive effluents and radiological environmental monitoring, including 10 CFR 50.36a, 10 CFR 50, Appendix I and 40 CFR 190, will continue to be maintained. Specifications provided to establish or maintain margins of safety have not been changed.

Therefore, operation of the facility in accordance with the proposed amendment would not involve a significant reduction in a margin of safety.

Based on the discussion presented above and on the supporting Evaluation of Proposed TS Changes, FPL has concluded that this proposed license amendment involves no significant hazards consideration.

The NRC staff has reviewed the licensee's analysis and, based on this review, it appears that the three standards of 50.92(c) are satisfied. Therefore, the NRC staff proposes to determine that the amendment request involves no significant hazards consideration.

Local Public Document Room location: Indian River Junior College Library, 3209 Virginia Avenue, Fort Pierce, Florida 34954-9003

Attorney for licensee: Harold F. Reis, Esquire, Newman and Holtzinger, 1615 L Street, NW., Washington, DC 20036

NRC Project Director: Herbert N. Berkow

Georgia Power Company, Oglethorpe Power Corporation, Municipal Electric Authority of Georgia, City of Dalton, Georgia, Docket Nos. 50-424 and 50-425, Vogtle Electric Generating Plant, Units 1 and 2, Burke County, Georgia

Date of amendment request: July 2, 1993

Description of amendment request: The proposed amendments would revise Action a. of Technical Specification (TS) 3.11.1.4, Liquid Holdup Tanks. Currently, Action a. references a "Semiannual Radioactive Release Report." This would be renamed "Annual Radioactive Release Report." This change, in effect, decreases the frequency for submitting reports on events which lead to exceeding radioactive material limits for the liquid holdup tanks from a semiannual to an annual basis.

Basis for proposed no significant hazards consideration determination: The licensee notes that the proposed changes to TS 3.11.1.4 are consistent with those previously approved by the NRC in which the frequency of submittal of the Semiannual Radioactive Effluent Release Report was changed to an annual basis in accordance with a recent revision of 10 CFR 50.36a (57 FR 39353 dated August 31, 1992). These changes were approved by Amendment 61 (Unit 1) and Amendment 40 (Unit 2) on March 31, 1993. The changes presently proposed to TS 3.11.1.4 should have been requested as part of the previous amendments request but were inadvertently omitted during the preparation of that request.

As required by 10 CFR 50.91(a), the licensee has provided its analysis of the issue of no significant hazards consideration, which is presented below:

1. The proposed changes do not involve a significant increase in the probability or consequences of an accident previously evaluated. The proposed changes are administrative in nature and do not involve any changes to the configuration or method of operation of any plant equipment that is used to mitigate the consequences of an accident. Also, the proposed changes do not alter the conditions or assumptions in any of the Final Safety Analysis Report (FSAR) accident analyses. Since the FSAR accident analyses remain bounding, the radiological consequences previously evaluated are not adversely affected by the proposed changes. Therefore, it can be concluded that the proposed changes do not involve a significant increase in the probability or consequences of an accident previously evaluated.

2. The proposed changes do not create the possibility of a new or different kind of accident from any accident previously evaluated. The proposed changes are administrative in nature and do not involve any change to the configuration or method of operation of any plant equipment that is used to mitigate the consequences of an accident. Accordingly, no new failure modes have been defined for any plant system or component important to safety nor has any new limiting failure been identified as a result of the proposed changes. Also, there will be no change in the types or increase in the amount of effluents released offsite. Therefore, it can be concluded that the proposed changes do not create the possibility of a new or different kind of accident from any accident previously evaluated.

3. The proposed changes do not involve a significant reduction in a margin of safety. The proposed changes are administrative in nature and do not adversely impact the plant's ability to meet applicable regulatory requirements related to radioactive effluents and radiological environmental monitoring. The proposed changes would also eliminate an unnecessary burden of governmental regulation without reducing protection for public health and safety. Therefore, it can be concluded that the proposed changes do not involve a significant reduction in a margin of safety.

The NRC staff has reviewed the licensee's analysis and, based on this review, it appears that the three standards of 10 CFR 50.92(c) are satisfied. Therefore, the NRC staff proposes to determine that the amendment request involves no significant hazards consideration.

Local Public Document Room location: Burke County Public Library, 412 Fourth Street, Waynesboro, Georgia 30830.

Attorney for licensee: Mr. Arthur H. Domby, Troutman Sanders, NationsBank Plaza, Suite 5200, 600 Peachtree Street, NE., Atlanta, Georgia 30308

NRC Project Director: David B. Matthews

GPU Nuclear Corporation, Docket No. 50-320, Three Mile Island Nuclear Station, Unit No. 2, (TMI-2), Dauphin County, Pennsylvania

Date of amendment request: June 29, 1993

Description of amendment request: In a letter dated March 17, 1992, General Public Utilities Nuclear Corporation, GPUN or the licensee, requested the relocation of requirements in the Appendix A and B Technical Specifications related to radiological effluents to a new document called the Offsite Dose Calculation Manual (ODCM). The removal of these requirements from the Technical Specifications is in accordance with the guidance in NRC staff issued Generic Letter 89-01 dated January 31, 1989. The NRC staff issued License Amendment No. 43 to Facility License No. DPR-73 for TMI-2 on May 26, 1993, transferring

radiation monitoring and dose assessment requirements for the TMI-2 facility to the ODCM. The licensee, on June 29, 1993, notified the NRC staff by letter that they failed to include a change to Appendix A Technical Specifications Section 3.9.12, "Fuel Handling Building/Auxiliary Building Air Cleanup Systems" in their original March 17, 1992 amendment request. The current Technical Specification references an Appendix B instantaneous release rate for gaseous effluents that no longer exists in Appendix B. The release rates were relocated to the ODCM by the May 26, 1993 Amendment No. 43 to the TMI-2 license. The June 29, 1993 license amendment request proposes to resolve this administrative oversight by revising Section 3.9.12 of the Appendix A Technical Specifications to properly reference the ODCM for the instantaneous release rate for gaseous effluents.

Basis for proposed no significant hazards consideration determination: As required by 10 CFR 50.91(a), the licensee has provided their analysis of the issue of no significant hazards consideration, which is presented below:

10 CFR 50.92 provides the criteria which the Commission uses to evaluate a No Significant Hazards Consideration. 10 CFR 50.92 states that an amendment to a facility license involves No Significant Hazards if operation of the facility in accordance with the proposed amendment would not:

1. Involve a significant increase in the probability or consequence of an accident previously evaluated, or

2. Create the possibility of a new or different kind of accident from any accident previously evaluated, or

3. Involve a significant reduction in a margin of safety.

This change would not involve a significant increase in the probability or consequences of an accident nor create the possibility of a new or different kind of accident because the change is administrative in nature and makes Appendix A Tech. Specs. consistent with License Amendment No. 43. This change would not involve a significant reduction of the margin of safety since it corrects an administrative omission in a prior License Amendment.

Therefore, the proposed changes involve no significant hazards considerations as defined by 10 CFR 50.92.

The NRC staff has reviewed the analysis of the licensee and, based on this review, it appears that the three standards of 10 CFR 50.92(c) are satisfied. Therefore, the NRC staff proposes to determine that the amendment request involves no significant hazards consideration.

Local Public Document Room location: Government Publications Section, State Library of Pennsylvania, Walnut Street and Commonwealth Avenue, Box 1601, Harrisburg, Pennsylvania 17105

NRC Project Director: Seymour H. Weiss

Houston Lighting & Power Company, City Public Service Board of San Antonio, Central Power and Light Company, City of Austin, Texas, Docket Nos. 50-498 and 50-499, South Texas Project, Units 1 and 2, Matagorda County, Texas

Date of amendment request: August 5, 1993

Description of amendment request: The amendment changes the Technical Specifications (TS) by revising the Limiting Conditions for Operation of TSs 3.2.1.5, 3.2.1.6, 3.5.1, 3.5.5, 3.9.1 and associated Bases to reflect changes in systems containing borated water for Unit 1. The amendment would also change the implementation date from that originally submitted on January 14, 1993, of "Unit 1 fifth refueling outage" to "prior to Unit 1 restart from the current outage." There have been no changes to Unit 1 that deviate from the original submittal.

Houston Lighting & Power Company (HL&P) submitted the original amendment on January 14, 1993, with an implementation date of the third refueling outage for Unit 2 and the fifth refueling outage for Unit 1. The amendment was granted on May 25, 1993, with an implementation date of the third refueling outage for Unit 2. The amendments stated that for Unit 1, HL&P must reapply for the necessary final implementation.

After review, HP&L determined that no changes have been made that would affect the original application or the NRC staff's safety evaluation.

Basis for proposed no significant hazards consideration determination: As required by 10 CFR 50.91(a), the licensee has provided its analysis of the issue of no significant hazards consideration, which is presented below:

1. The proposed change does not involve a significant increase in the probability or consequences of an accident previously evaluated.

The proposed increase in boron concentrations increases the amount of boron delivered to the reactor core under accident conditions. This will decrease the reactivity of the core and will not increase the probability or consequences of an accident previously evaluated.

The reduction in the switchover time for the post-LOCA hot leg injection will ensure that the maximum allowable boric acid concentration will not be exceeded, thus maintaining the current margin to safety.

The proposed increase in the required volume of the Boric Acid Storage Tanks is to ensure that sufficient boric acid is available to borate the reactor coolant system and the water in the refueling canal such that the criticality limit during shutdown and refueling can be met for future cores.

The increase in the required minimum boron concentration in the refueling canal in Mode 6 does not modify or replace the K_{eff} reactivity limit. The design of each reload core is checked to ensure that the refueling criticality limit is met.

Therefore, the changes do not involve a significant increase in the probability or consequences of an accident previously evaluated.

2. The proposed change does not create the possibility of a new or different kind of accident from any accident previously evaluated.

The proposed increase in boron concentrations increases the amount of boron delivered to the reactor core under accident conditions. This increase in boron will not create the possibility of a new or different kind of accident from any accident previously evaluated.

The reduction in the switchover time for the post-LOCA hot leg injection will ensure that the maximum allowable boric acid concentration will not be exceeded. This reduction in switchover time will maintain the current margin to safety. Therefore, the increase in the boron concentration will not create the possibility of a new or different kind of accident from any accident previously evaluated.

The proposed increase in the required volume of the Boric Acid Storage Tanks during shutdown and refueling is to ensure the reactor coolant system can be adequtely borated during shutdown. This increase in volume does not create the possibility of a new or different kind of accident from any accident previously evaluated.

The increase in the required minimum boron concentration in the refueling canal in Mode 6 does not modify or replace the K_{eff} reactivity limit. Therefore, the increase in the boron concentration will not create the possibility of a new or different kind of accident from any accident previously evaluated.

The proposed changes do not create the possibility of a new or different kind of accident from any accident previously evaluated.

3. The proposed change does not involve a significant reduction in a margin of safety.

The proposed increase in boron concentrations increases the amount of boron delivered to the reactor core under accident conditions. This will decrease the reactivity of the core and will not cause a decrease in a margin of safety.

The reduction in the switchover time for the post-LOCA hot leg injection will ensure that the maximum allowable boric acid concentration will not be exceeded, thus maintaining the current margin of safety.

The proposed increase in the required volume of the Boric Acid Storage Tanks is to ensure that sufficient boric acid is available to borate the water in the reactor coolant system and the refueling canal such that the criticality limit during shutdown and refueling can be met for future cores. Also, the increase in the required minimum boron

concentration in the refueling canal in Mode 6 does not modify or replace the K_{eff} reactivity limit.

The design of each reload core is checked to ensure that the refueling criticality limit is met. The proposed changes do not involve a change to the refueling criticality limit and serve to maintain the current margin of safety.

Therefore, the proposed changes do not involve a significant reduction in a margin of safety.

The NRC staff has reviewed the licensee's analysis and, based on this review, it appears that the three standards of 10 CFR 50.92(c) are satisfied. Therefore, the NRC staff proposes to determine that the request for amendments involves no significant hazards consideration.

Local Public Document Room location: Wharton County Junior College, J. M. Hodges Learning Center, 911 Boling Highway, Wharton Texas 77488

Attorney for licensee: Jack R. Newman, Esq., Newman & Holtzinger, P.C., 1615 L Street, NW, Washington, DC 20036

NRC Project Director: Suzanne C. Black

Nebraska Public Power District, Docket No. 50-298, Cooper Nuclear Station, Nemaha County, Nebraska

Date of amendment request: June 14, 1993

Description of amendment request: The proposed amendment would revise the Cooper Nuclear Station (CNS) Technical Specifications to support compliance with the new requirements of Title 10 Code of Federal Regulations Part 20. Additionally, the amendment would remove the Technical Specification (Section 3/4.8 and associated bases) governing the control of miscellaneous radioactive sources, in accordance with the guidance provided by NUREG-1433, "Standard Technical Specifications, General Electric Plants, BWR/4," which, unlike previous revisions of the BWR Standard Technical Specifications, does not contain any Technical Specifications addressing the testing of miscellaneous radioactive sealed sources. Finally, the proposed amendment includes a number of minor editorial changes unrelated to either revised 10 CFR Part 20 or miscellaneous radioactive sealed sources, such as page renumbering and capitalization of defined terms.

Basis for proposed no significant hazards consideration determination: As required by 10 CFR 50.91(a), the licensee has provided its analysis of the issue of no significant hazards consideration, which is presented below:

1. Does the proposed change involve a significant increase in the probability or consequences of an accident previously evaluated?

Evaluation

The first part of Proposed Change No. 117 involves numerous individual changes necessary to bring the CNS Technical Specifications into conformance with the revised 10 CFR [Part] 20 Rule. These changes are both editorial and administrative in nature, and do not affect any accident initiators or change any assumptions of the accident evaluations. These changes do not involve the modification or addition of any plant equipment, nor do they involve a change in plant settings that affect plant operation responses. Therefore, this part of the proposed change does not involve a significant increase in the probability or consequences of an accident previously evaluated.

The second part of Proposed Change No. 117 removes Section 3/4.8.A, its associated bases, and records retention requirements (Section 6.4.3) from the CNS Technical Specifications. These requirements will instead be addressed by CNS administrative procedures. This change is administrative in nature and is in accordance with guidance provided in NUREG-1433, "Standard Technical Specifications, General Electric Plants, BWR/4", which do not contain technical specifications for the control of miscellaneous sealed sources. The requirements of, and compliance to, License Condition 2.B.2.(3) of the CNS Facility Operating License are unaffected by this change. This proposed change does not affect any accident initiators or change any assumptions. There are no setpoint changes, changes to plant equipment, changes in maintenance, or changes in plant operations. Therefore, this part of the proposed change does not involve a significant increase in the probability or consequences of an accident previously evaluated.

The third part of Proposed Change No. 117 consists of editorial changes not directly related to the revised Part 20 portion of this proposed change. These changes include, but are not limited to, page renumbering and the capitalization of defined terms. These changes are editorial in nature and have no impact on plant equipment, plant design, or operations. These editorial changes do not modify or add any initiating parameters. Therefore, this part of the proposed change does not involve a significant increase in the probability or consequences of an accident previously evaluated.

2. Does the proposed change create the possibility for a new or different kind of accident from any accident previously evaluated?

Evaluation

The first part of the proposed change involves numerous editorial and administrative changes related to the implementation of the revised 10 CFR [Part] 20. These individual changes do not result in the modification of any structure, system, or component, nor do these changes introduce or change any mode of plant operation. This part of the proposed change does not create the possibility for a new of different kind of accident from any accident previously evaluated.

The second part of the proposed change removes Section 3/4.8.A, its associated bases, and records retention requirements (Section 6.4.3) from the CNS Technical Specifications. This part of the proposed change is administrative in nature and does not involve the modification, addition, or deletion of any plant equipment, nor does it change or introduce any new mode of plant operation. This part of the proposed change does not create the possibility for a new of different kind of accident from any accident previously evaluated.

The third part of the proposed change consists of editorial changes not directly related to the revised Part 20 portion of this proposed amendment. These individual changes do not involve any alteration to plant design, setpoints, or operating parameters, nor do they introduce or change any mode of plant operation. Therefore, this part of the proposed change does not create the possibility for a new different kind of accident from any accident previously evaluated.

3. Does the proposed change create a significant reduction in the margin of safety?

Evaluation

The first part of the proposed change involve[s] the updating of applicable sections of the CNS Technical Specifications to be in agreement with the revised 10 CFR [Part] 20 Rule. The NRC has concluded that "incorporation of these changes will ensure that Part 20 continues to provide adequate protection of public health and safety" (FR Vol. 56. No.98, May 21, 1991). The revised Part 20 Rule contains several enhanced radiation safety requirements for members of the public and individuals exposed to occupational radiation. Implementation of the new regulation has no effect on plant safety setpoint settings or overall operation of the station, as it pertains to maintaining plant safety margins. Therefore, this part of the proposed change does not create a significant reduction in the margin of safety.

The second part of the proposed change removes Section 3/4.8.A, its associated bases, and records retention requirements (Section 6.4.3) from the CNS Technical Specifications. This part of the proposed change is administrative in nature and does not impact the operability determination of installed plant equipment, has no effect on plant safety setpoint settings, and does not have any effect on plant operations. Therefore, this part of the proposed change does not create a significant reduction in the margin of safety.

The third part of the proposed change consists of editorial changes not directly related to the revised Part 20 portion of this proposed change. These individual changes do not involve any change to plant design, equipment, instrument setpoints, or operation. Therefore, this part of the proposed change does not create a significant reduction in the margin of safety.

The NRC staff has reviewed the licensee's analysis and, based on this review, it appears that the three standards of 10 CFR 50.92(c) are satisfied. Therefore, the NRC staff

proposes to determine that the amendment request involves no significant hazards consideration.

Local Public Document Room location: Auburn Public Library, 118 15th Street, Auburn, Nebraska 68305

Attorney for licensee: Mr. G.D. Watson, Nebraska Public Power District, Post Office Box 499, Columbus, Nebraska 68602-0499

NRC Project Director: Harry Rood (Acting)

Northeast Nuclear Energy Company, Docket No. 50-245, Millstone Nuclear Power Station, Unit 1, New London County, Connecticut

Date of amendment request: July 26, 1993

Description of amendment request: The proposed change would increase the maximum stroke time for reactor water cleanup (RWCU) system isolation valves CU-2, 3, 5, and 28 from 18 seconds to 20 seconds in Technical Specification Table 3.7.1.

Basis for proposed no significant hazards consideration determination: As required by 10 CFR 50.91(a), the licensee has provided its analysis of the issue of no significant hazards consideration, which is presented below:

In accordance with 10CFR50.92, NNECO has reviewed the proposed change described above and has concluded that it does not involve a significant hazards consideration (SHC) because the change would not:

1. Involve a significant increase in the probability or consequences of an accident previously evaluated.

The proposed increase in the allowable closure time for RWCU system isolation valves CU-2, 3, 5, and 28 from 18 to 20 seconds would have no impact on the core cooling aspect of a LOCA [loss of coolant accident]. With respect to the radiological consequences of a LOCA, the proposed valve closure time of 20 seconds is well within the 60-second closure limit assumed in the associated LOCA analysis. The proposed increase in closure time to 20 seconds is consistent with the Updated Final Safety Analysis Report analysis of RWCU line break in the reactor building which assumes a 20-second closure limit. The analysis results are used in calculating harsh environment impact in the reactor building and in calculating the off-site dose of an RWCU line break. The environmental profiles for the reactor building are not affected by this change. Therefore, this proposed change has no affect on the initiation, probability, or consequences of any previously evaluated accident scenarios.

2. Create the possibility of a new or different kind of accident from any previously analyzed.

The 20-second closure time for RWCU system isolation valves CU-2, 3, 5, and 28 has been previously analyzed and found to be consistent with design basis accident assumptions. The proposed increase in closure time to 20 seconds is consistent with the Updated Final Safety Analysis Report analysis of RWCU line break in the reactor building which assumes a 20-second closure limit. The analysis results are used in calculating harsh environment impact in the reactor building and in calculating the off-site dose of an RWCU line break. The environmental profiles for the reactor building are not affected by this change. As such, the potential for an unanalyzed accident is not created. No new failure modes are introduced.

3. Involve a significant reduction in a margin of safety.

Increased maximum allowable isolation times for RWCU valves do not diminish the ability to isolate the containment. The proposed change does not affect the consequences of any accidents previously analyzed, and no safety limits for the protective boundaries are impacted. Therefore, the proposed change does not reduce the margin of safety.

The NRC staff has reviewed the licensee's analysis and, based on this review, it appears that the three standards of 10 CFR 50.92(c) are satisfied. Therefore, the NRC staff proposes to determine that the amendment request involves no significant hazards consideration.

Local Public Document Room location: Learning Resources Center, Thames Valley State Technical College, 574 New London Turnpike, Norwich, Connecticut 06360.

Attorney for licensee: Gerald Garfield, Esquire, Day, Berry & Howard, Counselors at Law, City Place, Hartford, Connecticut 06103-3499.

NRC Project Director: John F. Stolz

Northeast Nuclear Energy Company (NNECO), Docket No. 50-245, Millstone Nuclear Power Station, Unit 1, New London County, Connecticut

Date of amendment request: July 27, 1993

Description of amendment request: The proposed changes would eliminate the exemption granted on May 10, 1985, for air lock testing and require Millstone Unit 1 to meet paragraph III.D.2(b)(ii) of Appendix J. Specifically, the proposed changes would: (1) delete the description of the May 10, 1985, Appendix J exemption pertaining to low pressure tests of the containment access air locks, described in the Millstone Unit 1 Operating License Section 2.D(2), (2) reword Technical Specification 4.7.A.3.d(2) to be consistent with paragraph III.D.2(b) of 10 CFR 50, Appendix J, and (3) revise the associated bases section.

Basis for proposed no significant hazards consideration determination: As required by 10 CFR 50.91(a), the licensee has provided its analysis of the issue of no significant hazards consideration, which is presented below:

In accordance with 10CFR50.92, NNECO has reviewed the proposed changes and has concluded that they do not involve a significant hazards consideration (SHC). The basis for this conclusion is that the three criteria of 10CFR50.92(c) are not compromised. The proposed changes do not involve an SHC because the changes would not:

1. Involve a significant increase in the probability or consequences of an accident previously evaluated.

The proposed changes revise the operating license by eliminating the May 10, 1985, exemption which allowed low pressure tests of containment air locks; and revises Technical Specification 4.7.A.3.d(2) to eliminate the 10 psig test requirement and adds the Appendix J paragraph III.D.2(b)(ii) requirement to test the air lock at P_a (43 psig) prior to entering a mode in which primary containment integrity is required.

Elimination of the 10 psig test is conservative since actual leakage at 43 psig will be measured during the test. Testing of the air lock at 43 psig is already performed at least once every six months in accordance with the existing Technical Specification 4.7.A.3.d(2). The addition of a 43 psig LLRT [local leak rate test] prior to entering a mode where containment integrity is required provides additional assurance that the air locks are operable during the initial startup period. The change in test requirements does not degrade the performance of the containment personnel air lock, nor does it prevent actions assumed in the accident analysis. There is no change in the air lock or its function. Therefore, there is no effect on the probability or consequence of an accident.

2. Create the possibility of a new or different kind of accident from any previously evaluated.

The proposed changes do not modify the function of the air lock, nor are any requirements being added or deleted. The only changes are the elimination of the 10 psig test requirement and addition of the Appendix J paragraph III.D.2(b)(ii) requirement to test the air lock at P_a prior to entering a mode in which primary containment integrity is required. A 43 psig LLRT is already performed at least once every six months in accordance with the existing technical specification. The elimination of the 10 psig test does not subject the air lock to a higher test pressure than previously experienced.

Testing the air lock seals prior to entering a mode in which containment integrity is required does not create a potential for a new accident since the test is only being performed at a higher pressure and is completed to demonstrate that the airlock is operable. Since there are no changes in the air lock or its operation and no new test criteria are being added, the potential for an unanalyzed accident is not created.

3. Involve a significant reduction in a margin of safety.

The proposed changes eliminate an exemption and technical specification requirements which allowed a 10 psig LLRT

in place of a 43 psig LLRT and adds the Appendix J paragraph III.D.2(b)(ii) requirement to test the air lock at P_a prior to entering a mode in which primary containment integrity is required. The changes are conservative since actual leakage at 43 psig will be measured during testing and an additional test, prior to entering a mode where containment integrity is required, will be performed. The changes do not degrade the performance of the containment personnel air lock, but rather the proposed changes meet the testing requirements of 10CFR50 Appendix J. Moreover, the proposed change does not reduce any of the operability requirements of the technical specifications; therefore, there is no reduction in the margin of safety.

The NRC staff has reviewed the licensee's analysis and, based on this review, it appears that the three standards of 10 CFR 50.92(c) are satisfied. Therefore, the NRC staff proposes to determine that the amendment request involves no significant hazards consideration.

Local Public Document Room location: Learning Resources Center, Thames Valley State Technical College, 574 New London Turnpike, Norwich, Connecticut 06360.

Attorney for licensee: Gerald Garfield, Esquire, Day, Berry & Howard, Counselors at Law, City Place, Hartford, Connecticut 06103-3499.

NRC Project Director: John F. Stolz

Power Authority of the State of New York, Docket No. 50-333, James A. FitzPatrick Nuclear Power Plant, Oswego County, New York

Date of amendment request: July 7, 1993

Description of amendment request: The proposed amendment would revise Technical Specifications (TSs) 4.0.C and 4.0.D and the associated Bases to incorporate the guidance provided in NRC Generic Letter 87-09, "Sections 3.0 and 4.0 of the Standard Technical Specifications (STS) on the Applicability of Limiting Conditions for Operation and Surveillance Requirements." The proposed change to TS 4.0.C would incorporate a 24-hour delay in implementing the Action Requirements due to a missed surveillance requirement when the Action Requirements provide a restoration time that is less than 24 hours. The proposed change to TS 4.0.D would allow mode changes to be made as required to comply with Action Requirements even if the surveillance requirements to enter a mode are not complete.

Basis for proposed no significant hazards consideration determination: As required by 10 CFR 50.91(a), the licensee has provided its analysis of the issue of no significant hazards consideration, which is presented below:

Operation of the FitzPatrick plant in accordance with the proposed Amendment would not involve a significant hazards consideration as defined in 10 CFR 50.92, since it would not:

1. involve a significant increase in the probability or consequences of an accident previously evaluated.

The proposed change to [Technical] Specification 4.0.C will allow a delay of implementation of Action Requirements for up to 24 hours under certain conditions when a surveillance has been missed. Additionally, in some cases a surveillance should be delayed until proper plant conditions exist. This will not significantly increase the probability or consequences of an accident, in that surveillances normally verify system or component operability as opposed to discovering inoperability. Without the 24 hour delay, it is possible that a missed surveillance would force the plant to shutdown. Avoidance of these unnecessary shutdowns is beneficial since this reduces reactor vessel stresses which far outweighs any disadvantages associated with the additional 24 hours in which to perform a missed surveillance.

If a plant shutdown is required before a missed surveillance is completed, it is likely that it would be conducted when the plant is being shutdown because the completion of a missed surveillance would terminate the shutdown requirement. This is undesirable since it increases the risk to the plant and public safety by:

• placing the plant in a transient state involving changing plant conditions that offer the potential for an upset that could lead to a demand for the system or component being tested. This would occur when the system or component is either out of service to allow performance of the surveillance test or there is a lower level of confidence in its operability because the normal surveillance was exceeded. If the surveillance does demonstrate that the system or component is inoperable, it would be preferable to restore it to an operable status before making a major change in plant operating conditions.

• a shutdown would increase the pressure on the plant staff to expeditiously complete the required surveillance so the plant could be returned to power operation. This would further increase the potential for a plant upset when both the shutdown and surveillance activities place a demand on the plant operators.

The proposed change to [Technical] Specification 4.0.D will allow passage through an operational mode if required to comply with an Action Statement. This includes entry into a mode even if required surveillances for that mode are incomplete. The proposed Technical Specification will not result in a change to the design or operation of the facility, therefore, this change will not result in an increase in the probability or consequences of an accident previously evaluated.

2. create the possibility of a new or different kind of accident from any accident previously evaluated.

The proposed change to [Technical] Specification 4.0.C will allow the plant to continue operation for an additional 24 hours after discovery of a missed surveillance. Missing a surveillance does not mean that a component or system is inoperable. In most cases, surveillance demonstrates the continued operability of the components and systems. This change will not affect the design of the plant and will not allow the plant to be operated outside the currently allowed modes of operation.

The proposed change to [Technical] Specification 4.0.D will alleviate a conflict within the Technical Specifications. The change is necessary to allow the plant to proceed through or to required operational modes to comply with Action statement requirements even if applicable Surveillance Requirements may not have been performed. This change can not initiate a new or different kind of accident.

3. involve a significant reduction in the margin of safety.

The proposed change to Technical Specification 4.0.C will allow up to 24 hours to perform a missed surveillance. In some cases this will eliminate the need for a plant shutdown. The overall effect is a net gain in plant safety by avoiding unnecessary shutdowns and the associated system transients due to missed surveillances.

The proposed change to Technical Specification 4.0.D will eliminate an internal conflict within the Technical Specifications and allow the plant to proceed through or to required operational modes to comply with Action Requirements even if applicable Surveillance Requirements for that mode may not be performed. This change does not affect any margin of safety.

Implementation of these change to the FitzPatrick Surveillance Requirements is consistent with the guidance provide[d] by the NRC in Generic Letter 87-09. The NRC staff encourages licensees to implement these technical specification changes since they have concluded that this will result in improved Technical Specifications for all plants.

The NRC staff has reviewed the licensee's analysis and, based on this review, it appears that the three standards of 50.92(c) are satisfied. Therefore, the NRC staff proposes to determine that the amendment request involves no significant hazards consideration.

Local Public Document Room location: Reference and Documents Department, Penfield Library, State University of New York, Oswego, New York 13126.

Attorney for licensee: Mr. Charles M. Pratt, 1633 Broadway, New York, New York 10019.

NRC Project Director: Robert A. Capra

Public Service Electric & Gas Company, Docket No. 50-354, Hope Creek Generating Station, Salem County, New Jersey

Date of amendment request: July 7, 1993

Description of amendment request: The proposed changes remove Pages 4-1a and 4-1b of Section 4.2.1, "Aquatic Monitoring," from the Environmental Protection Plan.

Basis for proposed no significant hazards consideration determination: As required by 10 CFR 50.91(a), the licensee has provided its analysis of the issue of no significant hazards consideration, which is presented below:

1. Will not involve a significant increase in the probability or consequences of an accident previously evaluated.

The proposed change would remove the sea turtle monitoring and reporting requirements from the Environmental Protection Plan (Appendix B to the facility operating license). The change is administrative in nature and would in no way affect the initial conditions, assumptions, or conclusions of the Hope Creek accident analyses. In addition, the proposed change would not affect the operation or performance of any equipment assumed in the accident analyses. Based on the above information, we conclude that the proposed change would not significantly increase the probability or consequences of an accident previously evaluated.

2. Will not created the possibility of a new or different kind of accident from any accident previously evaluated.

The proposed change is administrative in nature and would in no way impact or alter the configuration or operation of the facility and would create no new modes of operation. We therefore conclude that the proposed changes would not create the possibility of a new or different kind of accident.

3. Will not involve a significant reduction in a margin of safety.

As indicated in the discussion of Criterion 1, the change is administrative in nature and would in no way affect plant or equipment operation or the accident analyses. We therefore conclude that the proposed change would not result in a significant reduction in a margin of safety.

The NRC staff has reviewed the licensee's analysis and, based on this review, it appears that the three standards of 10 CFR 50.92(c) are satisfied. Therefore, the NRC staff proposes to determine that the amendment request involves no significant hazards consideration.

Local Public Document Room location: Pennsville Public Library, 190 S. Broadway, Pennsville, New Jersey 08070

Attorney for licensee: M. J. Wetterhahn, Esquire, Winston and Strawn, 1400 L Street, NW., Washington, DC 20005-3502

NRC Project Director: Charles L. Miller

Public Service Electric & Gas Company, Docket Nos. 50-272 and 50-311, Salem Nuclear Generating Station, Unit Nos. 1 and 2, Salem County, New Jersey

Date of amendment request: July 19, 1993, as supplemented by letter dated August 5, 1993. This notice supersedes the previous notice in its entirety (58 FR 16872 dated March 31, 1993).

Description of amendment request: This amendment request would delete line item 9, Boric Acid Tank Solution Level, from Tables 3.3-11 and 4.3-11 and the associated Action 3, of Technical Specification 3.3.3.7, Post Accident Monitoring System for both Salem, Units 1 and 2.

Basis for proposed no significant hazards consideration determination: As required by 10 CFR 50.91(a), the licensee has provided its analysis of the issue of no significant hazards consideration, which is presented below:

1. Does not involve a significant increase in the probability or consequences of an accident previously evaluated.

[...]

The change does not involve a system that was assumed to function in any of the design/licensing basis analysis, therefore, the probability or consequences of an accident previously evaluated are not increased.

2. Does not created the possibility of a new or different kind of accident from any accident previously evaluated.

The proposed change does not introduce any design or physical configuration changes to the facility which could create new accident scenarios.

3. Does not involve a significant reduction in a margin of safety.

As stated in response to question number 1 above, the proposed change does not affect a system that was taken credit for or assumed to function under any of the design/licensing basis analysis. Consequently, there is no reduction in any margin of safety.

The NRC staff has reviewed the licensee's analysis and, based on this review, it appears that the three standards of 10 CFR 50.92(c) are satisfied. Therefore, the NRC staff proposes to determine that the amendment request involves no significant hazards consideration.

Local Public Document Room location: Salem Free Public library, 112 West Broadway, Salem, New Jersey 08079

Attorney for licensee: Mark J. Wetterhahn, Esquire, Winston and Strawn, 1400 L Street, NW., Washington, DC 20005-3502

NRC Project Director: Charles L. Miller

Union Electric Company, Docket No. 50-483, Callaway Plant, Unit 1, Callaway County, Missouri

Date of amendment request: June 4, 1993

Description of amendment request: The amendment would revise Technical Specification Tables 2.2-1 and 4.3-1 as well as Bases 3/4.2.2 and 3/4.2.3 by changing the Axial Flux Difference (AFD) penalty function, f_1 (Delta-I), defined in Note 1 of Table 2.2-1 for the Overtemperature Delta-T (OTDT) Reactor Trip Functional Unit. These changes will be accommodated by use of the available DNBR margin, as reflected in Bases 3/4.2.2 and 3/4.2.3, and by a recalibration tolerance reduction for the incore vs. excore AFD comparison surveillance in Note 3 of Table 4.3-1 from 3 percent to 2 percent.

Basis for proposed no significant hazards consideration determination: As required by 10 CFR 50.91(a), the licensee has provided its analysis of the issue of no significant hazards consideration, which is presented below:

(1) Involve a significant increase in the probability or consequences of an accident previously evaluated.

Overall protection system performance will remain within the bounds of the accident analyses documented in FSAR Chapter 15, [WCAP-10961-P], and WCAP-11883 since no hardware changes are proposed.

The OTDT reactor trip function is a primary trip credited in the FSAR Chapter 15 and WCAP-10961-P accident analyses. The OPDT reactor trip function provides backup protection against excessive power (fuel rod integrity protection within the fuel temperature design basis). No credit is explicitly taken for OPDT trips in those accident analyses, although the OPDT trip is credited in the analysis of a steamline break coincident with control rod withdrawal.

The OTDT setpoint is designed to ensure plant operation within the DNB design basis and hot leg boiling limit. The OTDT AFD penalty function, f_1 (Delta-I), is designed to ensure DNB protection from adverse axial power shapes. This AFD penalty function is generated based on expected axial power shapes from various ANS Condition I and II events. Changing the penalty function deadband, such that no penalty is incurred for axial flux differences between -23 percent and +10 percent Delta-I, as well as increasing the power reduction slope of the positive wing will have no effect on the accident analyses since those analyses do not model the f_1 (Delta-I) term in the OTDT setpoint equation. This penalty function accounts for axial power shape effects on the DNB criteria and independently lowers the OTDT setpoint to ensure a conservative reactor trip when faced with severe power shapes. Changing the slope of the positive wing will eliminate a DNBR penalty assessed due to the non-conservative nature in which Westinghouse previously calculated the AFD penalty function. Changing the deadband will require

the use of available DNBR margin as reflected in the revisions to the Bases.

The OTDT and OPDT (which for Callaway is a backup trip with no AFD penalty function) trips will continue to function in a manner consistent with the above analysis assumptions and the plant design basis. As such, there will be no degradation in the performance of or an increase in the number of challenges to equipment assumed to function during an accident situation.

The reactor trip system response time, beginning at the time the measured Delta-T exceeds the trip setpoint at the RTDs as defined in the Technical Specifications, will be unaffected. With the addition of the time constant inequality signs, the time between the beginning of a transient until the RTDs sense a Delta-T higher than the reactor trip setpoint will be reduced since the effect of the signal conditioning will be to lower the trip setpoint if the time constants are set in accordance with the conservative direction of the inequality signs.

These Technical Specification revisions do not involve any hardware changes nor do they affect the probability of any event initiators. There will be no change to normal plant operating parameters, ESF actuation setpoints, accident mitigation capabilities, accident analysis assumptions or inputs. The accident analyses do not model the OTDT AFD penalty function, therefore changes to that penalty function do not impact the conclusions of the accident analyses. The addition of the OTDT and OPDT time constant inequality signs has the effect of lowering the respective reactor trip setpoints. Therefore, these changes will not increase the probability or consequences of an accident previously evaluated.

(2) Create the possibility of a new or different kind of accident from any previously evaluated.

As discussed above, there are no hardware changes associated with these Technical Specification revisions nor are there any changes in the method by which any safety-related plant system performs its safety function. Revisions to the OTDT AFD penalty function deadband and positive wing slope will require setpoint and scaling changes for the function generator (NCH) cards in the 7300 Process Protection System. The nature of these setpoint and scaling changes is straightforward and similar to those performed to implement Relaxed Axial Offset Control. The new requirement to recalibrate if the incore vs. excore AFD mismatch is greater than or equal to 2 percent does not affect the manner of plant operation. At most this would result in monthly recalibrations vs. the current quarterly recalibrations. This mismatch has historically been less than 2 percent and is usually less than 1 percent.

No new accident scenarios, transient precursors, failure mechanisms, or limiting single failures are introduced as a result of these changes. There will be no adverse effect or challenges imposed on any safety-related system as a result of these changes. Therefore, the possibility of a new or different kind of accident is not created.

(3) Involve a significant reduction in a margin of safety.

There will be no change to the DNBR Correlation limit, the design DNBR limits, or the safety analysis DNBR limits discussed in BASES Section 2.1.1. Available DNBR margin will be used to widen the OTDT AFD penalty function deadband, as indicated in the revisions to BASES 3/4.2.2 and 3/4.2.3.

As discussed earlier, the response time of the OTDT and OPDT reactor trip functions will remain within the assumptions used in the accident analyses. The analyses of the events which credit the OTDT reactor trip will remain as presented in FSAR Chapter 15 and WCAP-10961-P.

The OTDT setpoint calculation includes terms that are dependentupon a gain factor determined by the slope of the positive wing of the AFD penalty function. One of these terms is derived from Note 3 of Technical Specification Table 4.3-1. That note deals with a monthly comparison of incore to excore AFD above 15 percent of rated thermal power. Currently there is a requirement to recalibrate, normally done on a quarterly interval, if the absolute difference in the incore vs. excore AFD is greater than or equal to 3 percent. It has been confirmed that the Z, S, and Allowable Value terms currently listed in Table 2.2-1 for the OTDT trip function will remain conservative, and no changes are required, by reducing the incore vs. excore AFD recalibration tolerance from 3 percent to 2 percent and implementing the new gain factor. There will be no effect on the manner in which safety limits or limiting safety system settings are determined nor will there be any effect on those plant systems necessary to assure the accomplishment of protection functions. There will be no impact on DNBR limits, F_Q, F-delta-H, LOCA PCT, peak local power density, or any other margin of safety.

The NRC staff has reviewed the licensee's analysis and, based on this review, it appears that the three standards of 10 CFR 50.92(c) are satisfied. Therefore, the NRC staff proposes to determine that the amendment request involves no significant hazards consideration.

Local Public Document Room location: Callaway County Public Library, 710 Court Street, Fulton, Missouri 65251.

Attorney for licensee: Gerald Charnoff, Esq., Shaw, Pittman, Potts & Trowbridge, 2300 N Street, N.W., Washington, DC 20037.

NRC Project Director: John N. Hannon

Virginia Electric and Power Company, Docket Nos. 50-280 and 50-281, Surry Power Station, Unit Nos. 1 and 2, Surry County, Virginia

Date of amendment request: July 2, 1993

Description of amendment request: The proposed changes will update the augmented inspection program for sensitized stainless steel to incorporate the newer Code requirements, while maintaining the increased inspection philosophy of the Atomic Safety and Licensing Board.

Basis for proposed no significant hazards consideration determination: As required by 10 CFR 50.91(a), the licensee has provided its analysis of the issue of no significant hazards consideration, which is presented below:

Specifically, operation of Surry Power Station in accordance with the proposed Technical Specification changes will not:

1. Involve a significant increase in the probability of occurrence or consequences of an accident previously evaluated.

The proposed examination requirements will continue to provide assurance of system integrity for those systems containing sensitized stainless steel. Plant and specific system operations are not being changed. Therefore, changing the examination selection criteria and the examination technique for sensitized stainless steel does not increase the probability of or the consequences of any accident previously evaluated in the UFSAR [Updated Final Safety Analysis Report].

2. Create the possibility of a new or different kind of accident from any accident previously evaluated.

Changing the examination selection criteria and the examination technique for sensitized stainless steel does not involve any physical modification of the plant or change in a method of operation. A new failure mode is not introduced. Therefore, a new or different type of accident is not made possible.

3. Involve a significant reduction in a margin of safety.

The proposed changes do not affect any safety limits or limiting safety system settings. System operating parameters are unaffected. The proposed examination requirements will continue to provide assurance of system integrity for those systems containing sensitized stainless steel. Thus the availability of equipment required to mitigate or assess the consequences of an accident is not reduced.

The NRC staff has reviewed the licensee's analysis and, based on this review, it appears that the three standards of 50.92(c) are satisfied. Therefore, the NRC staff proposes to determine that the amendment request involves no significant hazards consideration.

Local Public Document Room location: Swem Library, College of William and Mary, Williamsburg, Virginia 23185.

Attorney for licensee: Michael W. Maupin, Esq., Hunton and Williams, Riverfront Plaza, East Tower, 951 E. Byrd Street, Richmond, Virginia 23219.

NRC Project Director: Herbert N. Berkow

Virginia Electric and Power Company, Docket Nos. 50-280, 50-281, 50-338, 50-339, Surry Power Station, Units No. 1 and No.2 Surry County, Virginia and North Anna Power Station, Units No. 1 and No. 2, Louisa County, Virginia

Date of amendment request: July 20, 1993

Description of amendment request: The proposed changes would delete the Technical Specification requirement for Surry 1&2 and NA-1&2 Station Nuclear Safety and Operating Committee (SNSOC) review of the Emergency and Security Plans since this requirement will remain in each of the respective plans. Also, audit frequencies are being deleted from the Technical Specifications while the listing of the specific audits will remain. As a result, the revised audit frequencies will be governed by the Emergency and Security Plans and a summary statement in the Operational Quality Assurance Program Topical Report which stipulate audit frequencies.

On April 1, 1993, the NRC published a notice of opportunity for public comment for a proposed generic communication (58 FR 17293) which provides guidance for relocating certain requirements (without reducing them) from the Technical Specifications to other NRC-approved program documents. The proposed generic communication specifically addresses the reviews and audits of the Emergency Plan and implementing procedures and the Physical Security Plan and implementing procedures. Currently, the requirements for these reviews and audits are incorporated into the Surry 1&2 and NA-1&2 Emergency and Security Plans. The proposed changes would delete the redundant references in the facilities' Technical Specifications to the requirements which originate in Title 10 of the Code of Federal Regulations [10 CFR 50.54(t) for Emergency Preparedness and 10 CFR 50.54(p), 10 CFR 73.40, 10 CFR 73.55, and 10 CFR 73.56 for Security].

The proposed amendments would eliminate the references to specific frequencies for each of the Technical Specification-required audits and eliminate reference to reviews and audits of the Emergency Plan and Security Plan. Instead, a statement would be added to the Operational Quality Assurance Program specifying that the audits listed in the Surry 1&2 and NA-1&2 Technical Specifications would be accomplished on a biennial (2 years) frequency as defined by Operational Quality Assurance Program commitments to NRC Regulatory Guide 1.74 and as directed by administrative procedures and/or management. The requirements for reviews and annual audits of the facility Emergency Plan and Security Plan (and their associated implementing procedures) are currently delineated within the NRC-approved Emergency Plans and Security Plans as provided for in the NRC's proposed generic communications.

Basis for proposed no significant hazards consideration determination: As required by 10 CFR 50.91(a), the licensee has provided its analysis of the issue of no significant hazards consideration, which is presented below:

(1) Operation of the facilit[ies] in accordance with the proposed technical specifications would not involve a significant increase in the probability or consequences of an accident previously evaluated.

The likelihood that an accident will occur is neither increased or decreased by this Technical Specification change which only affects review and audit frequencies. This Technical Specification change will not impact the function or method of operation of plant equipment. Thus, there is not a significant increase in the probability of a previously analyzed accident due to this change. No systems, equipment, or components are affected by the proposed changes. Thus, the consequences of the malfunction of equipment important to safety previously evaluated in the UFSAR [Updated Final Safety Analysis Report] are not increased by this change.

The proposed change only affects review and audit frequencies. As such, the proposed change has no impact on accident initiators or plant equipment, and thus, does not affect the probabilities or consequences of an accident.

Therefore, we conclude that this change does not significantly increase the probabilities or consequences of an accident.

(2) Operation of the facilit[ies] in accordance with the proposed technical specifications would not create the possibility of a new or different kind of accident from any accident previously evaluated.

The proposed changes do not involve changes to the physical plant or operations. Since program audits do not contribute to accident initiation, a change related to audit functions cannot produce a new accident scenario or produce a new type of equipment malfunction. Also, this change does not alter any existing accident scenarios. The proposed change does not affect equipment or its operation, and, thus, does not create the possibility of a new or different kind of accident. Therefore, the proposed change does not create the possibility of a new or different kind of accident.

(3) Operation of the facilit[ies] in accordance with the proposed technical specifications would not involve a significant reduction in a margin of safety.

The proposed change concerning conduct of reviews and audits does not directly affect plant equipment or operation. Safety limits and limiting safety system settings are not affected by this proposed change.

Therefore, use of the proposed Technical Specification would not involve any reduction in the margin of safety.

The NRC staff has reviewed the licensee's analysis and, based on this review, it appears that the three standards of 50.92(c) are satisfied. Therefore, the NRC staff proposes to determine that the amendment request involves no significant hazards consideration.

Local Public Document Room locations: Swem Library, College of William and Mary, Williamsburg, Virginia 23185, and The Alderman Library, Special Collections Department, University of Virginia, Charlottesville, Virginia 22903-2498.

Attorney for licensee: Michael W. Maupin, Esq., Hunton and Williams, Riverfront Plaza, East Tower, 951 E. Byrd Street, Richmond, Virginia 23219.

NRC Project Director: Herbert N. Berkow

Previously Published Notices of Consideration of Issuance of Amendments to Facility Operating Licenses, Proposed No Significant Hazards Consideration Determination, and Opportunity for a Hearing

The following notices were previously published as separate individual notices. The notice content was the same as above. They were published as individual notices either because time did not allow the Commission to wait for this biweekly notice or because the action involved exigent circumstances. They are repeated here because the biweekly notice lists all amendments issued or proposed to be issued involving no significant hazards consideration. For details, see the individual notice in the **Federal Register** on the day and page cited. This notice does not extend the notice period of the original notice.

Georgia Power Company, Oglethorpe Power Corporation, Municipal Electric Authority of Georgia, City of Dalton, Georgia, Docket Nos. 50-424 and 50-425, Vogtle Electric Generating Plant, Units 1 and 2, Burke County, Georgia

Date of amendment request: March 1, 1993, as supplemented July 26, 1993

Description of amendment request: The proposed amendments would revise Technical Specification (TS) 3/4.3.3, "Reactor Trip System Instrumentation," TS 3/4.3.2, "Engineered Safety Feature Actuation System Instrumentation," and their associated Bases to relax surveillance test intervals and allowed outage times for engineered safety features actuation system instrumentation based on Westinghouse Topical Report WCAP-

10271 as previously approved by the NRC.

Date of publication of individual notice in **Federal Register:** August 9, 1993 (58 FR 42350)

Expiration date of individual notice: September 8, 1993

Local Public Document Room location: Burke County Public Library, 412 Fourth Street, Waynesboro, Georgia 30830

GPU Nuclear Corporation, et al., Docket No. 50-289, Three Mile Island Nuclear Station, Unit No. 1, Dauphin County, Pennsylvania

Date of amendment request: June 7, 1993

Description of amendment request: The proposed amendment would revise the plant Technical Specifications (TS) to reflect the inclusion of gadolinia-urania in the fuel rod design description, to revise the borated water storage tank boron concentration limits, and to clarify the bases section of the TS. The proposed amendment would also place a reference in the TS to Babcock & Wilcox Topical Report BAW-10179P, "Safety Criteria and Methodology for Acceptable Cycle Reload Analyses."

Date of publication of individual notice in **Federal Register:** August 9, 1993 (58 FR 42352)

Expiration date of individual notice: September 8, 1993

Local Public Document Room location: Government Publications Section, State Library of Pennsylvania, Walnut Street and Commonwealth Avenue, Box 1601, Harrisburg, Pennsylvania 17105.

Northeast Nuclear Energy Company, et al., Docket No. 50-336, Millstone Nuclear Power Station, Unit No. 2, New London County, Connecticut

Date of amendment request: May 14, 1993, supplemented June 10 and July 16, 1993.

Description of amendment request: The proposed amendment would modify the spent fuel pool storage pool that would introduce neutron absorbing (poison) rodlets (pins) into the stored fuel and increase the required burnup in Region C to permit removal of the cell blockers, thus increasing by 234 fuel assemblies the storage capacity of the spent fuel storage pool.

Date of publication of individual notice in **Federal Register:** August 10, 1993 (58 FR 42581)

Expiration date of individual notice: September 9, 1993

Local Public Document Room location: Learning Resources Center, Thames Valley State Technical College, 574 New London Turnpike, Norwich, Connecticut 06360.

Notice of Issuance of Amendments to Facility Operating Licenses

During the period since publication of the last biweekly notice, the Commission has issued the following amendments. The Commission has determined for each of these amendments that the application complies with the standards and requirements of the Atomic Energy Act of 1954, as amended (the Act), and the Commission's rules and regulations. The Commission has made appropriate findings as required by the Act and the Commission's rules and regulations in 10 CFR Chapter I, which are set forth in the license amendment.

Notice of Consideration of Issuance of Amendment to Facility Operating License, Proposed No Significant Hazards Consideration Determination, and Opportunity for A Hearing in connection with these actions was published in the **Federal Register** as indicated.

Unless otherwise indicated, the Commission has determined that these amendments satisfy the criteria for categorical exclusion in accordance with 10 CFR 51.22. Therefore, pursuant to 10 CFR 51.22(b), no environmental impact statement or environmental assessment need be prepared for these amendments. If the Commission has prepared an environmental assessment under the special circumstances provision in 10 CFR 51.12(b) and has made a determination based on that assessment, it is so indicated.

For further details with respect to the action see (1) the applications for amendment, (2) the amendment, and (3) the Commission's related letter, Safety Evaluation and/or Environmental Assessment as indicated. All of these items are available for public inspection at the Commission's Public Document Room, the Gelman Building, 2120 L Street, NW., Washington, DC 20555, and at the local public document rooms for the particular facilities involved.

Carolina Power & Light Company, et al., Docket No. 50-400, Shearon Harris Nuclear Power Plant, Unit 1, Wake and Chatham Counties, North Carolina

Date of application for amendment: February 26, 1993, as supplemented July 27, 1993.

Brief description of amendment: The amendment revises Technical Specification 3/4.4.9, Pressure/Temperature Limits by replacing the current five year heatup and cooldown limitations with revised limitations based on predicted reactor vessel neutron exposure at eleven effective full power years of operation.

Date of issuance: August 20, 1993

Effective date: August 20, 1993

Amendment No. 38

Facility Operating License No. NPF-63. Amendment revises the Technical Specifications.

Date of initial notice in **Federal Register:** March 31, 1993 (58 FR 16854) The July 27, 1993, supplemental letter provided clarifying information and did not change the initial proposed no significant hazards consideration.

The Commission's related evaluation of the amendment is contained in a Safety Evaluation dated August 20, 1993.

No significant hazards consideration comments received: No

Local Public Document Room location: Cameron Village Regional Library, 1930 Clark Avenue, Raleigh, North Carolina 27605.

Consumers Power Company, Docket No. 50-155, Big Rock Point Plant, Charlevoix County, Michigan

Date of application for amendment: May 24, 1993, as supplemented July 9, 1993

Brief description of amendment: The amendment clarifies the Technical Specification that deals with the undervoltage breakers in the Reactor Protection System.

Date of issuance: August 16, 1993

Effective date: August 16, 1993

Amendment No.: 110

Facility Operating License No. DPR-6. Amendment revised the Technical Specifications.

Date of initial notice in **Federal Register:** June 23, 1993 (58 FR 34073)

The July 9, 1993, letter provided clarifying information only and did not affect the Commission's initial proposed no significant hazards consideration determination.

The Commission's related evaluation of the amendment is contained in a Safety Evaluation dated August 16, 1993.

No significant hazards consideration comments received: No.

Local Public Document Room location: North Central Michigan College, 1515 Howard Street, Petoskey, Michigan 49770.

Duquesne Light Company, et al., Docket Nos. 50-334 and 50-412, Beaver Valley Power Station, Unit Nos. 1 and 2, Shippingport, Pennsylvania

Date of application for amendments: November 16, 1992, as supplemented March 11, 1993.

Brief description of amendments: The amendments revise the Appendix A

Technical Specifications (TS) relating to the containment recirculation spray system. The amendments add TS coverage to address the failure of more subsystems than are now covered in TS. In addition, certain requirements that were only applicable to cycle 8 operation are deleted.

Date of issuance: August 11, 1993

Effective date: August 11, 1993

Amendment Nos.: 174, 54

Facility Operating License Nos. DPR-66 and NPF-73: Amendments revised the Technical Specifications.

Date of initial notice in **Federal Register:** January 21, 1993 (58 FR 5430)

The March 11, 1993, supplement provided information that did not change the initial no significant hazards consideration determination.

The Commission's related evaluation of the amendments is contained in a Safety Evaluation dated August 11, 1993.

No significant hazards consideration comments received: No.

Local Public Document Room location: B. F. Jones Memorial Library, 663 Franklin Avenue, Aliquippa, Pennsylvania 15001.

Duquesne Light Company, et al., Docket Nos. 50-334 and 50-412, Beaver Valley Power Station, Unit Nos. 1 and 2, Shippingport, Pennsylvania

Date of application for amendments: December 21, 1992

Brief description of amendments: These amendments revise the Appendix A TS relating to alternate source range neutron flux monitors. The amendments permit the use of alternate source range monitors provided the required visual and audible indications are available. The amendments also allow installation of the reactor core upper internals when only one monitor is available. In addition, the TS are expanded to cover the case where both monitors are inoperable.

Date of issuance: August 20, 1993

Effective date: As of date of issuance and to be implemented within 60 days of issuance.

Amendment Nos.: 175 and 55

Facility Operating License Nos. DPR-66 and NPF-73: Amendments revised the Technical Specifications.

Date of initial notice in **Federal Register:** March 25, 1993 (58 FR 16223)

The Commission's related evaluation of the amendments is contained in a Safety Evaluation dated August 20, 1993

No significant hazards consideration comments received: No.

Local Public Document Room location: B. F. Jones Memorial Library, 663 Franklin Avenue, Aliquippa, Pennsylvania 15001.

Entergy Operations, Inc., Docket No. 50-382, Waterford Steam Electric Station, Unit 3, St. Charles Parish, Louisiana

Date of amendment request: May 7, 1993.

Brief description of amendment: The amendment revised the Technical Specifications by allowing the third Type A Containment Integrated Leakage Rate Test in the first 10-year service period to be conducted at Refuel 7. This exceeds the allowed interval by approximately 4 months.

Date of issuance: August 12, 1993

Effective date: August 12, 1993

Amendment No.: 85

Facility Operating License No. NPF-38. Amendment revised the Technical Specifications.

Date of initial notice in **Federal Register:** June 23, 1993 (58 FR 34079)

The Commission's related evaluation of the amendment is contained in a Safety Evaluation dated August 12, 1993.

No significant hazards consideration comments received: No.

Local Public Document Room location: University of New Orleans Library, Louisiana Collection, Lakefront, New Orleans, Louisiana 70122.

Entergy Operations, Inc., System Energy Resources, Inc., South Mississippi Electric Power Association, and Mississippi Power & Light Company, Docket No. 50-416, Grand Gulf Nuclear Station, Unit 1, Claiborne County, Mississippi

Date of application for amendment: May 20, 1993, as supplemented by letter dated July 15, 1993

Brief description of amendment: The amendment removed from the TS the operability requirements for the auto-test feature of the load shedding and sequencing (LSS) system, and increased the allowed outage time (AOT) in the TS for an inoperable LSS system from 8 to 12 hours.

Date of issuance: August 16, 1993

Effective date: August 16, 1993

Amendment No: 108

Facility Operating License No. NPF-29. Amendment revises the Technical Specifications.

Date of initial notice in **Federal Register:** June 23, 1993 (58 FR 34076)

The additional information contained in the supplemental letter dated July 15, 1993, was clarifying in nature and thus, within the scope of the initial notice and did not affect the staff's proposed no significant hazards consideration determination.

The Commission's related evaluation of the amendment is contained in a Safety Evaluation dated August 16, 1993.

No significant hazards consideration comments received: No

Local Public Document Room location: Judge George W. Armstrong Library, Post Office Box 1406, S. Commerce at Washington, Natchez, Mississippi 39120.

Georgia Power Company, Oglethorpe Power Corporation, Municipal Electric Authority of Georgia, City of Dalton, Georgia, Docket Nos. 50-321 and 50-366, Edwin I. Hatch Nuclear Plant, Units 1 and 2, Appling County, Georgia

Date of application for amendments: October 19, 1992, as supplemented May 3 and July 27, 1993

Brief description of amendments: The amendments delete the main steam isolation valve closure, the reactor scram, and the control room pressurization functions of the main steam line radiation monitors.

Date of issuance: August 17, 1993

Effective date: To be implemented no later than 60 days from the date of issuance

Amendment Nos.: 188 and 127

Facility Operating License Nos. DPR-57 and NPF-5. Amendments revised the Technical Specifications.

Date of initial notice in **Federal Register:** April 14, 1993 (58 FR 19482)

The May 3 and July 27, 1993, letters provided additional and clarifying information that did not change the no signficant hazards consideration determination.

The Commission's related evaluation of the amendments is contained in a Safety Evaluation dated August 17, 1993.

No significant hazards consideration comments received: No

Local Public Document Room location: Appling County Public Library, 301 City Hall Drive, Baxley, Georgia 31513

GPU Nuclear Corporation, et al., Docket No. 50-289, Three Mile Island Nuclear Station, Unit 1, Dauphin County, Pennsylvania

Date of application for amendment: March 19, 1993, as supplemented on July 23, 1993

Brief description of amendment: The amendment extends the effectiveness of the Technical Specification (TS) pressure vs. temperature limits until plant operation has reached 15.2 effective full power years (EFPY).

Date of issuance: August 16, 1993

Effective date: August 16, 1993

Amendment No.: 176

Facility Operating License No. DPR-50. Amendment revised the Technical Specifications.

Date of initial notice in **Federal Register:** June 23, 1993 (58 FR 34080)

The July 23, 1993, submittal provided clarifying information that did not change the initial no significant hazards consideration determination. The Commission's related evaluation of this amendment is contained in a Safety Evaluation dated August 16, 1993.

No significant hazards consideration comments received: No.

Public Document Room location: Government Publications Section, State Library of Pennsylvania, Walnut Street and Commonwealth Avenue, Box 1601, Harrisburg, Pennsylvania 17105.

Illinois Power Company and Soyland Power Cooperative, Inc., Docket No. 50-461, Clinton Power Station, Unit No. 1, DeWitt County, Illinois

Date of application for amendment: December 27, 1991

Brief description of amendment: The amendment modifies Clinton Power Station Technical Specification 3/4.7.2, "Control Room Ventilation System," by revising Action Statement b.1 to provide an alternative where the operable Control Room Ventilation System does not have to be operated in the high radiation mode. Also, Surveillance Requirement 4.7.2.e.5 is revised to reference the control room pressure relative to the adjacent areas as opposed to the outside atmosphere as previously identified.

Date of issuance: August 5, 1993

Effective date: August 5, 1993

Amendment No.: 82

Facility Operating License No. NPF-62. The amendment revised the Technical Specifications.

Date of initial notice in **Federal Register:** September 2, 1992 (57 FR 40213)

The Commission's related evaluation of the amendment is contained in a Safety Evaluation dated August 5, 1993.

No significant hazards consideration comments received: No

Local Public Document Room location: The Vespasian Warner Public Library, 120 West Johnson Street, Clinton, Illinois 61727.

Indiana Michigan Power Company, Docket Nos. 50-315 and 50-316, Donald C. Cook Nuclear Plant, Unit Nos. 1 and 2, Berrien County, Michigan

Date of application for amendments: April 16, 1993, as supplemented June 18, 1993

Brief description of amendments: Amendments change Technical Specification (TS) 6.9.1.8 and 6.9.1.9, "Semi-Annual Radioactive Effluent Release Report," to extend the Radioactive Effluent Release Report submittal frequency from semiannual to annual. The amendments also change TS 6.5.2.2, "Composition," 6.5.2.3, "Alternate Members," 6.5.2.9, "Authority," and 6.5.2.10, "Records," to reflect membership change in the Nuclear Safety and Design Review Committee charter.

Date of issuance: August 4, 1993

Effective date: August 4, 1993

Amendment Nos.: 174 and 157

Facility Operating License Nos. DPR-58 and DPR-74. Amendments revised the Technical Specifications.

Date of initial notice in **Federal Register:** June 23, 1993 (58 FR 34080) The June 18, 1993 letter provided an administrative correction and did not affect the staff's initial no significant hazards consideration findings.

The Commission's related evaluation of the amendments is contained in a Safety Evaluation dated August 4, 1993.

No significant hazards consideration comments received: No.

Local Public Document Room location: Maude Preston Palenske Memorial Library, 500 Market Street, St. Joseph, Michigan 49085.

Maine Yankee Atomic Power Company, Docket No. 50-309, Maine Yankee Atomic Power Station, Lincoln County, Maine

Date of application for amendment: June 7, 1993

Brief description of amendment: This amendment deletes the five-page list of safety-related shock suppressors (snubbers) from Technical Specification (TS) 3.20, while providing an additional Applicability statement. The additional Applicability statement clearly defines the safety-related scope of the snubber program controlled by the TS. In addition, snubber surveillance testing and recordkeeping requirements are changed to reflect the safety-related scope of the snubber program.

Date of issuance: August 16, 1993

Effective date: August 16, 1993

Amendment No.: 141

Facility Operating License No. DPR-36: Amendment revised the Technical Specifications.

Date of initial notice in **Federal Register:** July 14, 1993 (58 FR 37972)

The Commission's related evaluation of the amendment is contained in a Safety Evaluation dated August 16, 1993.

No significant hazards consideration comments received: No

Local Public Document Room location: Wiscasset Public Library, High Street, P.O. Box 367, Wiscasset, Maine 04578.

Niagara Mohawk Power Corporation, Docket No. 50-220, Nine Mile Point Nuclear Station Unit No. 1, Oswego County, New York

Date of application for amendment: May 26, 1993

Brief description of amendment: The amendment revises Technical Specifications 6.8.2 and 6.8.3c to require approval of plant procedures and administrative policies (and changes thereto) by the Branch Manager for the functional area of the procedure rather than requiring approval of these procedures and administrative policies by the Plant Manager.

Date of issuance: August 9, 1993

Effective date: As of the date of issuance to be implemented within 30 days.

Amendment No.: 144

Facility Operating License No. DPR-63: Amendment revises the Technical Specifications.

Date of initial notice in **Federal Register:** July 7, 1993 (58 FR 36438)

The Commission's related evaluation of the amendment is contained in a Safety Evaluation dated August 9, 1993.

No significant hazards consideration comments received: No

Local Public Document Room location: Reference and Documents Department, Penfield Library, State University of New York, Oswego, New York 13126.

Niagara Mohawk Power Corporation, Docket No. 50-410, Nine Mile Point Nuclear Station, Unit 2, Oswego County, New York

Date of application for amendment: May 26, 1993

Brief description of amendment: The amendment revises Technical Specifications (TSs) 6.8.2 and 6.8.3c to require approval of plant procedures (and changes thereto) by the Branch Manager for the functional area of the procedure rather than requiring approval of these procedures by the Plant Manager. The amendment also corrects a typographical error in TS 6.8.1.i and deletes a footnote on TS page 6-16; the change to TS 6.8.2 incorporates the intent of the deleted footnote.

Date of issuance: August 9, 1993

Effective date: As of the date of issuance to be implemented within 30 days.

Amendment No.: 45

Facility Operating License No. NPF-69: Amendment revises the Technical Specifications.

Date of initial notice in **Federal Register:** July 7, 1993 (58 FR 36439)

The Commission's related evaluation of the amendment is contained in a Safety Evaluation dated August 9, 1993.

No significant hazards consideration comments received: No

Local Public Document Room location: Reference and Documents Department, Penfield Library, State University of New York, Oswego, New York 13126.

Niagara Mohawk Power Corporation, Docket No. 50-410, Nine Mile Point Nuclear Station, Unit 2, Oswego County, New York

Date of application for amendment: February 27, 1993, as supplemented June 18, 1993

Brief description of amendment: The amendment revises Technical Specification Definition 1.9, "Critical Power Ratio," to replace the designation for the General Electric critical power correlation, "GEXL," with a more generic term. Changes have also been made to Bases Sections B2.1 and B3/4.2 to reflect the change to Definition 1.9, incorporate revisions to General Electric Company's approved analytical techniques, update references, and reflect changes made to the Reload Section of the Nine Mile Point Nuclear Station, Unit 2, Updated Safety Analysis Report.

Date of issuance: August 11, 1993

Effective date: As of the date of issuance to be implemented within 30 days.

Amendment No.: 46

Facility Operating License No. NPF-69: Amendment revises the Technical Specifications.

Date of initial notice in **Federal Register:** March 31, 1993 (58 FR 16866)

The June 18, 1993, submittal withdrew proposed changes to the recirculation flow upscale rod block setpoint.

The Commission's related evaluation of the amendment is contained in a Safety Evaluation dated August 11, 1993.

No significant hazards consideration comments received: No

Local Public Document Room location: Reference and Documents Department, Penfield Library, State University of New York, Oswego, New York 13126.

North Atlantic Energy Service Corporation, Docket No. 50-443, Seabrook Station, Unit No. 1, Rockingham County, New Hampshire

Date of amendment request: January 13, 1993.

Description of amendment request: The amendment modifies the frequency in submitting Radioactive Effluent Release Reports. The reporting frequency in Technical Specification (TS) 6.8.1.4 is revised from semiannual to annual. In addition, TS 6.8.1.4 is modified to reflect present plant conditions by eliminating footnotes concerning multi-unit sites and supplemental 30 day dose calculation reports. The Technical Specification Index and TS 3.3.3.9, 3.3.3.10, 3.11.1.4, 3.12.1, 3.12.2, 6.12, 6.13, and 6.14 referencing the Radioactive Effluent Release Report are changed to reflect the annual submittal requirement.

Date of issuance: August 16, 1993

Effective date: August 16, 1993

Amendment No.: 22

Facility Operating License No. NPF-86. Amendment revised the Technical Specifications.

Date of initial notice in **Federal Register:** March 25, 1993 (58 FR 16227).

The Commission's related evaluation of the amendment is contained in a Safety Evaluation dated August 16, 1993.

No significant hazards consideration comments received: No.

Local Public Document Room location: Exeter Public Library, 47 Front Street, Exeter, New Hampshire 03833.

North Atlantic Energy Service Corporation, Docket No. 50-443, Seabrook Station, Unit 1, Seabrook, New Hampshire

Date of amendment request: May 14, 1993

Description of amendment request: The amendment changes the footnote on page 1 of License NPF-86 to reflect the transfer of interest in the operating license from EUA Power Corporation to Great Bay Power Corporation.

Date of issuance: August 16, 1993

Effective date: August 16, 1993

Amendment No.: 23

Facility Operating License No. NPF-86. Amendment revised the License.

Date of initial notice in **Federal Register:** June 23, 1993 (58 FR 34083).

The Commission's related evaluation of the amendment is contained in a Safety Evaluation dated August 16, 1993.

No significant hazards consideration comments received: No.

Local Public Document Room location: Exeter Public Library, 47 Front Street, Exeter, New Hampshire 03833.

Northeast Nuclear Energy Company, et al., Docket No. 50-423, Millstone Nuclear Power Station, Unit No. 3, New London County, Connecticut

Date of application for amendment: April 15, 1993

Brief description of amendment: The proposed amendment would add a footnote which would extend the required date for inspection of steam generator tubes from August 21, 1993, to the end of the next refueling outage, but no later than September 30, 1993.

Date of issuance: August 19, 1993

Effective date: August 19, 1993

Amendment No.: 82

Facility Operating License No. NPF-49. Amendment revised the Technical Specifications.

Date of initial notice in **Federal Register:** May 26, 1993 (58 FR 30197)

The Commission's related evaluation of the amendment is contained in a Safety Evaluation dated August 19, 1993.

No significant hazards consideration comments received: No.

Local Public Document Room location: Learning Resources Center, Thames Valley State Technical College, 574 New London Turnpike, Norwich, Connecticut 06360.

Omaha Public Power District, Docket No. 50-285, Fort Calhoun Station, Unit No. 1, Washington County, Nebraska

Date of amendment request: October 9, 1992

Brief description of amendment: The amendment changed Technical Specification 3.2 (Table 3-5) to require a charcoal filter volumetric flow rate of between 4500 and 12000 cubic feet per minute. The amendment also included administrative changes. The remaining changes requested in the October 9, 1993, application remain under consideration and will be the subject of a future licensing action.

Date of issuance: August 10, 1993

Effective date: 30 days from the date of issuance

Amendment No.: 154

Facility Operating License No. DPR-40. Amendment revised the Technical Specifications.

Date of initial notice in **Federal Register:** November 25, 1992 (57 FR 55584)

The Commission's related evaluation of the amendment is contained in a Safety Evaluation dated August 10, 1993.

No significant hazards consideration comments received: No.

Local Public Document Room location: W. Dale Clark Library, 215 South 15th Street, Omaha, Nebraska 68102

Omaha Public Power District, Docket No. 50-285, Fort Calhoun Station, Unit No. 1, Washington County, Nebraska

Date of amendment request: December 7, 1992, as supplemented by letters dated March 19, April 28, and May 14, 1993

Brief description of amendment: The amendment changed the Technical Specifications to increase the fuel storage capacity in the spent fuel pool to 1083 fuel assemblies.

Date of issuance: August 12, 1993

Effective date: August 12, 1993

Amendment No.: 155

Facility Operating License No. DPR-40. Amendment revised the Technical Specifications and license.

Date of initial notice in **Federal Register:** February 2, 1993 (58 FR 6822)

The additional information contained in the supplemental letters dated March 19, April 28, and May 14, 1993, was clarifying in nature and, thus, within the scope of the initial notice and did not affect the staff's proposed no significant hazards consideration determination.

The Commission's related evaluation of the amendment is contained in a Safety Evaluation dated August 12, 1993.

No significant hazards consideration comments received: No.

Local Public Document Room location: W. Dale Clark Library, 215 South 15th Street, Omaha, Nebraska 68102

Pennsylvania Power and Light Company, Docket Nos. 50-387 and 50-388 Susquehanna Steam Electric Station, Units 1 and 2, Luzerne County, Pennsylvania

Date of application for amendments: May 4, 1993, and supplemented by letter dated July 15, 1993

Brief description of amendments: These amendments change the Technical Specifications to 1) decrease the test frequency of the drywell-to-suppression chamber bypass test to coincide with the test frequency for the Primary Containment Integrated Leak Rate Test, and 2) require an additional test to measure the vacuum breaker leakage area for those outages for which the drywell-to-suppression chamber bypass test is not scheduled.

Date of issuance: August 11, 1993

Effective date: August 11, 1993

Amendment Nos.: 129 and 98

Facility Operating License Nos. NPF-14 and NPF-22. These amendments revised the Technical Specifications.

Date of initial notice in **Federal Register:** June 9, 1993 (58 FR 32390)

The Commission's related evaluation of the amendments is contained in a Safety Evaluation dated August 11, 1993.

No significant hazards consideration comments received: No

Local Public Document Room location: Osterhout Free Library, Reference Department, 71 South Franklin Street, Wilkes-Barre, Pennsylvania 18701.

Philadelphia Electric Company, Public Service Electric and Gas Company, Delmarva Power and Light Company, and Atlantic City Electric Company, Docket No. 50-278, Peach Bottom Atomic Power Station, Unit No. 3, York County, Pennsylvania

Date of application for amendment: January 28, 1993

Brief description of amendment: This amendment revises the safety limit minimum critical power ratio for two recirculation loop and single recirculation loop operation to 1.07 and 1.08, respectively. The change was requested to accommodate installation and use of a new fuel type, GE-11 fuel, during Unit 3, Cycle 10 operation.

Date of issuance: August 18, 1993

Effective date: August 18, 1993

Amendment No.: 183

Facility Operating License No. DPR-56: Amendment revised the Technical Specifications.

Date of initial notice in **Federal Register:** March 3, 1993 (58 FR 12266)

The Commission's related evaluation of the amendment is contained in a Safety Evaluation dated August 18, 1993.

No significant hazards consideration comments received: No

Local Public Document Room location: Government Publications Section, State Library of Pennsylvania, (REGIONAL DEPOSITORY) Education Building, Walnut Street and Commonwealth Avenue, Box 1601, Harrisburg, Pennsylvania 17105.

Power Authority of the State of New York, Docket No. 50-333, James A. FitzPatrick Nuclear Power Plant, Oswego County, New York

Date of application for amendment: June 16, 1993, as supplemented by letter dated July 30, 1993.

Brief description of amendment: This amendment is in partial response to the licensee's application submitted June 16, 1993. The amendment extends the current intervals for certain surveillances that are required to be performed once each operating cycle until the end of the next refueling outage, currently scheduled to begin in January 1995. Specifically, the amendment extends the current intervals for bench checking and disassembling safety/relief valves in accordance with Technical Specifications (TSs) 4.6.E.1 and 4.6.E.2, and for testing excess flow check valves in accordance with TS 4.7.D.1.b.

Date of issuance: August 11, 1993

Effective date: As of the date of issuance to be implemented within 30 days.

Amendment No.: 195

Facility Operating License No. DPR-59: Amendment revised the Technical Specifications.

Date of initial notice in **Federal Register:** July 7, 1993 (58 FR 36444)

The Commission's related evaluation of the amendment is contained in a Safety Evaluation dated August 11, 1993.

No significant hazards consideration comments received: No

Local Public Document Room location: Reference and Documents Department, Penfield Library, State University of New York, Oswego, New York 13126.

Public Service Electric & Gas Company, Docket No. 50-354, Hope Creek Generating Station, Salem County, New Jersey

Date of application for amendment: May 6, 1993

Brief description of amendment: This amendment modifies plant Technical Specification 3.3.2, Table 3.3.2-1, Action 26. The changes would eliminate the requirement to place the filtration, recirculation, and ventilation system (FRVS) in operation when the reactor vessel level instrumentation is inoperable.

Date of issuance: August 18, 1993

Effective date: As of the date of issuance and shall be implemented within 60 days of the date of issuance.

Amendment No.: 57

Facility Operating License No. NPF-57: This amendment revised the Technical Specifications.

Date of initial notice in **Federal Register:** June 23, 1993 (58 FR 34090)

The Commission's related evaluation of the amendment is contained in a Safety Evaluation dated August 18, 1993.

No significant hazards consideration comments received: No

Local Public Document Room location: Pennsville Public Library, 190 S. Broadway, Pennsville, New Jersey 08070

South Carolina Electric & Gas Company, South Carolina Public Service Authority, Docket No. 50-395, Virgil C. Summer Nuclear Station, Unit No. 1, Fairfield County, South Carolina

Date of application for amendment: May 25, 1993, as supplemented on June 16, 1993, and June 30, 1993.

Brief description of amendment: The amendment reduces the minimum secondary pressure at which surveillance testing of the steam driven

emergency feedwater pump is allowed to "...greater than 865 psig."

Date of issuance: August 19, 1993

Effective date: August 19, 1993

Amendment No. 114

Facility Operating License No. NPF-12. Amendment revises the Technical Specifications.

Date of initial notice in **Federal Register:** July 14, 1993 (58 FR 37975)

The Commission's related evaluation of the amendment is contained in a Safety Evaluation dated August 19, 1993.

No significant hazards consideration comments received: No

Local Public Document Room location: Fairfield County Library, Garden and Washington Streets, Winnsboro, South Carolina 29180.

The Cleveland Electric Illuminating Company, Centerior Service Company, Duquesne Light Company, Ohio Edison Company, Pennsylvania Power Company, Toledo Edison Company, Docket No. 50-440, Perry Nuclear Power Plant, Unit No. 1, Lake County, Ohio

Date of application for amendment: October 30, 1991

Brief description of amendment: The amendment revised Technical Specifications 3.3.2-1 and 3.3.3-1 to clarify the logic for instrumentation used to isolate the High Pressure Core Spray (HPCS) test return valve and to initiate the HPCS system.

Date of issuance: August 11, 1993

Effective date: August 11, 1993

Amendment No. 50

Facility Operating License No. NPF-58. This amendment revised the Technical Specifications.

Date of initial notice in **Federal Register:** December 11, 1991 (56 FR 64651)

The Commission's related evaluation of the amendment is contained in a Safety Evaluation dated August 11, 1993.

No significant hazards consideration comments received: No

Local Public Document Room location: Perry Public Library, 3753 Main Street, Perry, Ohio 44081

Wolf Creek Nuclear Operating Corporation, Docket No. 50-482, Wolf Creek Generating Station, Coffey County, Kansas

Date of amendment request: March 8, 1993, as supplemented by letter dated June 2, 1993.

Brief description of amendments: The amendment deletes Technical Specification Section 3.3.3.7, "Chlorine Detection Systems", and its associated Bases as a result of a future plant modification to remove the one-ton chlorine storage containers from the site. Surveillance Requirement 4.7.6e.5 is also deleted. These changes will be made effective upon the removal of the one-ton chlorine storage containers from the site.

Date of issuance: August 16, 1993

Effective date: August 16, 1993

Amendment No.: 66

Facility Operating License No. NPF-42. Amendment revised the Technical Specifications.

Date of initial notice in **Federal Register:** June 23, 1993 (58 FR 34098)

The Commission's related evaluation of the amendment is contained in a Safety Evaluation dated August 16, 1993

No significant hazards consideration comments received: No.

Local Public Document Room Locations: Emporia State University, William Allen White Library, 1200 Commercial Street, Emporia, Kansas 66801 and Washburn University School of Law Library, Topeka, Kansas 66621

Dated at Rockville, Maryland, this 25th day of August 1993.

For the Nuclear Regulatory Commission

John A. Zwolinski,

Acting Director, Division of Reactor Projects III/IV/V, Office of Nuclear Reactor Regulation

[Doc. 93-21131 Filed 8-31-93; 8:45 am]

BILLING CODE 7590-01-F

Advisory Committee on Reactor Safeguards, Subcommittee on Severe Accidents; Meeting

The ACRS Subcommittee on Severe Accidents will hold a meeting on September 22–24, 1993, Columbian-D Room at the Sheraton Portland Airport Hotel, 8235 NE. Airport Way, Portland, OR.

The entire meeting will be open to public attendance.

The agenda for the subject meeting shall be as follows:

Wednesday, September 22, 1993—8:30 a.m. until the conclusion of business.

Thursday, September 23, 1993—8:30 a.m. until the conclusion of business.

Friday, September 24, 1993—8:30 a.m. until the conclusion of business.

The Subcommittee will continue its review of the severe accident and PRA issues associated with the GE ABWR design certification effort. The purpose of this meeting is to gather information, analyze relevant issues and facts, and to formulate proposed positions and actions, as appropriate, for deliberation by the full Committee.

Oral statements may be presented by members of the public with the concurrence of the Subcommittee Chairman; written statements will be accepted and made available to the Committee. Recordings will be permitted only during those portions of the meeting when a transcript is being kept, and questions may be asked only by members of the Subcommittee, its consultants, and staff. Persons desiring to make oral statements should notify the ACRS staff member named below as far in advance as is practicable so that appropriate arrangements can be made.

During the initial portion of the meeting, the Subcommittee, along with any of its consultants who may be present, may exchange preliminary views regarding matters to be considered during the balance of the meeting.

The Subcommittee will then hear presentations by and hold discussions with representatives of the NRC staff, its consultants, GE Nuclear Energy, its consultants, and other interested persons regarding this review.

Further information regarding topics to be discussed, the scheduling of sessions open to the public, whether the meeting has been cancelled or rescheduled, the Chairman's ruling on requests for the opportunity to present oral statements and the time allotted therefor can be obtained by a prepaid telephone call to the cognizant ACRS staff engineer, Mr. Dean Houston (telephone 301/492–9521) between 7:30 a.m. and 4:15 p.m. (EDT).

Persons planning the attend this meeting are urged to contact the above named individual one or two days before the scheduled meeting to be advised of any changes in schedule, etc., that may have occurred.

Dated: August 23, 1993.

Paul A. Boehnert,

Acting Chief, Nuclear Reactors Branch.

[FR Doc. 93–21240 Filed 8–31–93; 8:45 am]

BILLING CODE 7590–01–M

Advisory Committee on Reactor Safeguards, Subcommittee on Therman Hydraulic Phenomena; Meeting

The ACRS Subcommittee on Thermal Hydraulic Phenomena will hold a meeting on September 21, 1993, at the Agricultural Science Room of the Oregon State University (OSU), LaSells Stewart Center, Corvallis, OR.

The meeting will be open to public attendance, with the exception of portions that will be closed to discuss information deemed proprietary to the Westinghouse Electric Corporation pursuant to 5 U.S.C. 552b(c)(4).

The agenda for the subject meeting shall be as follows:

Tuesday, September 21, 1993—8 a.m. until the conclusion of business.

The Subcommittee will continue its review of the Westinghouse integral systems test programs being conducted in support of the AP600 design certification effort. The meeting discussion will focus on the OSU integral systems test facility program. The purpose of this meeting is to gather information, analyze relevant issues and facts, and to formulate proposed positions and actions, as appropriate, for deliberation by the full Committee.

Oral statements may be presented by members of the public with the concurrence of the Subcommittee Chairman; written statements will be accepted and made available to the Committee. Recordings will be permitted only during those portions of the meeting when a transcript is being kept, and questions may be asked only by members of the Subcommittee, its consultants, and staff. Persons desiring to make oral statements should notify the ACRS staff member named below as far in advance as is practicable so that appropriate arrangements can be made.

During the initial portion of the meeting, the Subcommittee, along with any of its consultants who may be present, may exchange preliminary views regarding matters to be considered during the balance of the meeting.

The Subcommittee will then hear presentations by and hold discussions with representatives of the Westinghouse Electric Corporation, the NRC staff, their respective contractors, and other interested persons regarding this review.

Further information regarding topics to be discussed, the scheduling of sessions open to the public, whether the meeting has been canceled or rescheduled, the Chairman's ruling on requests for the opportunity to present oral statements and the time allotted therefor can be obtained by a prepaid telephone call to the cognizant ACRS staff engineer, Mr. Paul Boehnert (telephone 301/492–8558) between 7:30 a.m. and 4:15 p.m. (EDT). Persons planning to attend this meeting as urged to contact the above named individual one or two days before the scheduled meeting to be advised of any changes in schedule, etc., that may have occurred.

Dated: August 23, 1993.

Paul Boehnert,

Acting Chief, Nuclear Reactors Branch

[FR Doc. 93–21239 Filed 8–31–93; 8:45 am]

BILLING CODE 7590–01–M

[Docket No. 50–423; License No. NPF–49]

Northeast Utilities, (Millstone Nuclear Power Station); Receipt of Petition for Director's Decision Under 10 CFR 2.206

Notice is hereby given that by Petition dated August 2, 1993, Paul M. Blanch (Petitioner) has requested that the Executive Director for Operations take enforcement action for Northeast Utilities (NU) violations of 10 CFR 50.7. As grounds for this request, the Petitioner asserts a letter he received from Mr. James Lieberman, Director, Office of Enforcement, dated July 15, 1993, responding to Mr. Blanch's letter of June 4, 1993, in which he stated that many specifics were not addressed in an enforcement action taken against NU, was unresponsive. Therefore, Mr. Blanch requests: (1) That enforcement action be taken against Dr. Charles F. Sears, former NU Vice President of Nuclear and Environmental Engineering, for willful violation of 10 CFR 50.7 and deliberate misconduct as defined by 10 CFR 50.5 (Mr. Blanch alleges that the NRC's Office of Investigations (OI) identified Dr. Sears as one of those responsible for actions taken resulting in harassment, intimidation and discrimination (HI&D) directed against him); (2) that a Severity Level I violation be imposed upon the NU Corporate Officer responsible for directing that two of Mr. Blanch's subordinates be suspended, which Mr. Blanch alleges was a retaliatory action in violation of 10 CFR 50.7 and deliberate misconduct as defined by 10 CFR 50.5; (3) that three Severity Level I violations be imposed upon three NU corporate officers (for violations of 10 CFR 50.7 and deliberate misconduct as defined by 10 CFR 50.5) whom Mr. Blanch alleges OI concluded were responsible for various incidents of HI&D and attempted HI&D against him; (4) that a Severity Level I violation be issued for actions by Ed Richters, NU attorney, and a Severity Level II violation be issued to Thomas Shaffer, NU manager, whom Mr. Blanch asserts threatened certain individuals with letters of reprimand if they did not talk with NU contract attorneys prior to being interviewed by the Office of Investigations (OI), for violation of 10 CFR 50.7 and deliberate misconduct as defined by 10 CFR 50.5; and (5) that a minimum of a Severity Level II violation be issued for actions in violation of 10 CFR 50.7 and 10 CFR 50.5 by Mr. Allen Pollack, NU Manager of Internal Auditing. Mr. Blanch alleges that Mr. Pollack, who was responsible for conducting an audit of Mr. Blanch's engineering group, was found by OI to have used falsified credentials and to have arrived at invalid conclusions based on invalid documentation, and that Mr. Pollack was fully aware that the audit was retaliatory and in violation of 10 CFR 50.7.

The request is being treated pursuant to 10 CFR 2.206 of the Commission's regulations. The request has been referred to the Director of the Office of Enforcement for action. As provided by § 2.206, appropriate action will be taken on this request within a reasonable time.

A copy of the Petition is available for inspection at the Commission's Public Document Room at 2120 L Street, NW., Washington, DC 20555.

Dated at Rockville, Maryland this 23rd day of August, 1993.

For the Nuclear Regulatory Commission.

Joseph R. Gray,

Deputy Director, Office of Enforcement.

[FR Doc. 93–21235 Filed 8–31–93; 8:45 am]

BILLING CODE 7590–01–P

[Docket No. 50–213]

Connecticut Yankee Atomic Power Co.; Issuance of Amendment to Facility Operating License

The U.S. Nuclear Regulatory Commission (Commission) has issued Amendment No. 162 to Facility Operating License No. DPR–61 issued to Connecticut Yankee Atomic Power Company (the licensee), which revised the Technical Specifications for operation of the Haddam Neck Plant located in Middlesex County, Connecticut. The amendment is effective as of the date of issuance.

The amendment modified the Technical Specifications to increase the shutdown margin (boron concentration) in Modes 1 through 5 to compensate for the additional reactivity added by a boron dilution event because of the transition from a stainless steel clad core to a zircaloy clad core.

The application for the amendment complies with the standards and requirements of the Atomic Energy Act of 1954, as amended (the Act), and the Commission's rules and regulations. The Commission has made appropriate findings as required by the Act and the Commission's rules and regulations in 10 CFR chapter I, which are set forth in the license amendment.

Notice of Consideration of Issuance of Amendment and Opportunity for Hearing in connection with this action was published in the **Federal Register** on May 18, 1993, (58 FR 29012).

The Commission has prepared an Environmental Assessment related to

the action and has determined not to prepare an environmental impact statement. Based upon the environmental assessment, the Commission has concluded that the issuance of this amendment will not have a significant effect on the quality of the human environment (58 FR 43661).

For further details with respect to the action see (1) the application for amendment dated April 23, 1993, and supplemented June 17, 1993, (2) Amendment No. 162 to License No. DPR-61, (3) the Commission's related Safety Evaluation, and (4) the Commission's Environmental Assessment. All of these items are available for public inspection at the Commission's Public Document Room, the Gelman Building, 2120 L Street NW., Washington, DC 20555 and at the local public document room located at the Russell Library, 123 Broad Street, Middletown, Connecticut 06457.

Dated at Rockville, Maryland, this 25th day of August 1993.

For the Nuclear Regulatory Commission.

Alan B. Wang,

Project Manager, Project Directorate I-4, Division of Reactor Projects—I/II, Office of Nuclear Reactor Regulation.

[FR Doc. 93-21237 Filed 8-31-93; 8:45 am]

BILLING CODE 7590-01-M

[Docket No. 50-311]

Salem Nuclear Generating Station, Unit 2; Consideration of Issuance of Amendment to Facility Operating License, Proposed no Significant Hazards Consideration Determination, and Opportunity for a Hearing

The U.S. Nuclear Regulatory Commission (the Commission) is considering issuance of an amendment to Facility Operating License No. DPR-75 issued to Public Service Electric and Gas Company (the licensee) for operation of the Salem Nuclear Generating Station, Unit 2, located in Salem County, New Jersey.

The proposed amendment would modify the Technical Specifications for the A.C. power sources, on a one time basis, to allow connection of two new 500/13.8 kv transformer bus sections as part of the Salem switchyard project during the Unit 1 11th refueling outage. The change would extend the allowed outage time for one inoperable offsite power circuit from 72 hours to 120 hours for two separate action statement entries to allow switchyard modifications. It would also modify the emergency diesel generator testing requirements during the action statement entries.

Before issuance of the proposed license amendment, the Commission will have made findings required by the Atomic Energy Act of 1954, as amended (the Act) and the Commission's regulations.

The Commission has made a proposed determination that the amendment request involves no significant hazards consideration. Under the Commission's regulations in 10 CFR 50.92, this means that operation of the facility in accordance with the proposed amendment would not (1) involve a significant increase in the probability or consequences of an accident previously evaluated; or (2) create the possibility of a new or different kind of accident from any accident previously evaluated; or (3) involve a significant reduction in a margin of safety. As required by 10 CFR 50.91(a), the licensee has provided its analysis of the issue of no significant hazards consideration, which is presented below:

The proposed changes to Technical Specification 3.8.1.1 for Salem Unit No. 2:

1. Do not involve a significant increase in the probability or consequences of an accident previously evaluated.

The proposed change to the Salem Generating Station (SGS) Unit 2 Technical Specifications would allow extension of the action statements 3.8.1.1.a and 3.8.1.1.b, for one inoperable offsite power circuit, from 72 hours to 120 hours. This extension would apply to two separate action statement entries to enable bus connections for new 500/13.8 kv transformers as part of the Salem Switchyard Project. The proposed change would also reduce the number of Emergency Diesel Generator tests associated with the action statement entries.

The Salem Probabilistic Risk Assessment was used to compare the impact of extending the action time vs. the impact of manual reactor shutdown on core damage probability. The PRA results support two conclusions: (1) the risk of operating SGS Unit 2 for 48 hours beyond the 72 hour action time is less than the risk of shutting down the unit upon expiration of the 72 hour clock; and (2) increase in core damage probability associated with the increased action time is insignificant.

With one 500/13.8 kv transformer deenergized, and Unit 1 in a refueling outage, Unit 1 plant loads will be supplied by the one energized transformer. With Unit 2 operating, its plant electrical loads will be powered from the Unit 2 main generator via the Auxiliary Power Transformer (APT). In the event of a Unit 2 trip, the group bus (nonvital) loads will be transferred to the one 500/13.8 kv transformer. In order to minimize the effects of the potential load transfer, a 500/13.8 kv transformer will not be deenergized until the large Unit 1 balance of plant loads (i.e., condensate pumps, circulating water pumps, heater drain pumps and turbine auxiliaries cooling pumps), and reactor coolant pumps are secured. This will reduce the base load on the 500/13.8 kv transformer to accommodate the potential Unit 2 load transfer. The 500/13.8 kv transformers will not be removed from service unless the three Unit 2 EDG's are operable. These EDG's will be available to provide vital power in the event of a loss of offsite power.

The switchyard activities performed during the Unit 1 refueling outage are scheduled such that redundant decay heat removal and A.C. power capability will be maintained. The modifications will be performed in accordance with OSHA requirements relative to minimum clearance distances for energized equipment, and will be subject to the operations department administrative controls for switchyard equipment.

The proposed change would also exempt the Unit 2 EDG's from repetitive testing during the action statement entries. The Unit 2 EDG's will have been successfully tested to demonstrate operability prior to deenergizing a 500/13.8 kv transformer. Implementation of the switchyard modifications would not challenge EDG operability. The Improved Standard Technical Specifications as approved by NRC in NUREG 1431 do not require EDG testing with an inoperable offsite circuit.

Based on the above, the proposed changes do not involve a significant increase in probability or consequences of an accident.

2. Do not create the possibility of a new or different kind of accident from any accident previously evaluated.

The proposed change would extend the allowable time that SGS Unit 2 may operate with one inoperable offsite power circuit. It would not allow the plant to operate in any new configuration that is prohibited by the present plant Technical Specifications. The proposed change includes an exception to repetitive diesel testing while in an action statement for inoperable offsite power circuit. Deenergizing a 500/13.8 kv transformer will not affect EDG operability, and would not involve any changes to EDG operation. Therefore, the proposed changes do not involve any new or different kind of accident from any previously evaluated.

3. Do not involve a significant reduction in a margin of safety.

The Technical Specification requirements for A.C. power sources ensure that redundant electrical power is available to mitigate the consequences of any design basis accident and bring the plant to a safe shutdown condition. The proposed change would not affect the ability of SGS Unit 2 to recover from any design basis transient involving loss of offsite power plus a single failure of one EDG.

Unit 1 will be shutdown with redundant decay heat removal capability during implementation of the proposed change. Therefore, the proposed changes do not involve a reduction in any margin of safety.

The NRC staff has reviewed the licensee's analysis and, based on this review, it appears that the three standards of 10 CFR 50.92(c) are satisfied. Therefore, the NRC staff proposes to determine that the

amendment request involves no significant hazards consideration.

The Commission is seeking public comments on this proposed determination. Any comments received within 30 days after the date of publication of this notice will be considered in making any final determination.

Normally, the Commission will not issue the amendment until the expiration of the 30-day notice period. However, should circumstances change during the notice period such that failure to act in a timely way would result, for example, in derating or shutdown of the facility, the Commission may issue the license amendment before the expiration of the 30-day notice period, provided that its final determination is that the amendment involves no significant hazards consideration. The final determination will consider all public and State comments received. Should the Commission take this action, it will publish in the **Federal Register** a notice of issuance and provide for opportunity for a hearing after issuance. The Commission expects that the need to take this action will occur very infrequently.

Written comments may be submitted by mail to the Rules Review and Directives Branch, Division of Freedom of Information and Publications Services, Office of Administration, U.S. Nuclear Regulatory Commission, Washington, DC 20555, and should cite the publication date and number of this **Federal Register** notice. Written comments may also be delivered to Room P–223, Phillips Building, 7920 Norfolk Avenue, Bethesda, Maryland, from 7:30 a.m. to 4:15 p.m. Federal workdays. Copies of written comments received may be examined at the NRC Public Document Room, the Gelman Building, 2120 L Street, NW., Washington, DC 20555.

The filing of requests for hearing and petitions for leave to intervene is discussed below.

By October 1, 1993, the licensee may file a request for a hearing with respect to issuance of the amendment to the subject facility operating license and any person whose interest may be affected by this proceeding and who wishes to participate as a party in the proceeding must file a written request for a hearing and a petition for leave to intervene. Requests for a hearing and a petition for leave to intervene shall be filed in accordance with the Commission's "Rules of Practice for Domestic Licensing Proceedings" in 10 CFR part 2. Interested persons should consult a current copy of 10 CFR 2.714 which is available at the Commission's Public Document Room, the Gelman Building, 2120 L Street, NW., Washington, DC 20555 and at the local public document room located at the Salem Free Public Library, 112 West Broadway, Salem, New Jersey 08079. If a request for a hearing or petition for leave to intervene is filed by the above date, the Commission or an Atomic Safety and Licensing Board, designated by the Commission or by the Chairman of the Atomic Safety and Licensing Board Panel, will rule on the request and/or petition; and the Secretary or the designated Atomic Safety and Licensing Board will issue a notice of hearing or an appropriate order.

As required by 10 CFR 2.714, a petition for leave to intervene shall set forth with particularity the interest of the petitioner in the proceeding, and how that interest may be affected by the results of the proceeding. The petition should specifically explain the reasons why intervention should be permitted with particular reference to the following factors: (1) The nature of the petitioner's right under the Act to be made party to the proceeding; (2) the nature and extent of the petitioner's property, financial, or other interest in the proceeding; and (3) the possible effect of any order which may be entered in the proceeding on the petitioner's interest. The petition should also identify the specific aspect(s) of the subject matter of the proceeding as to which petitioner wishes to intervene. Any person who has filed a petition for leave to intervene or who has been admitted as a party may amend the petition without requesting leave of the Board up to 15 days prior to the first prehearing conference scheduled in the proceeding, but such an amended petition must satisfy the specificity requirements described above.

Not later than 15 days prior to the first prehearing conference scheduled in the proceeding, a petitioner shall file a supplement to the petition to intervene which must include a list of the contentions which are sought to be litigated in the matter. Each contention must consist of a specific statement of the issue of law or fact to be raised or controverted. In addition, the petitioner shall provide a brief explanation of the bases of the contention and a concise statement of the alleged facts or expert opinion which support the contention and on which the petitioner intends to rely in proving the contention at the hearing. The petitioner must also provide references to those specific sources and documents of which the petitioner is aware and on which the petitioner intends to rely to establish those facts or expert opinion. Petitioner must provide sufficient information to show that a genuine dispute exists with the applicant on a material issue of law or fact. Contentions shall be limited to matters within the scope of the amendment under consideration. The contention must be one which, if proven, would entitle the petitioner to relief. A petitioner who fails to file such a supplement which satisfies these requirements with respect to at least one contention will not be permitted to participate as a party.

Those permitted to intervene become parties to the proceeding, subject to any limitations in the order granting leave to intervene, and have the opportunity to participate fully in the conduct of the hearing, including the opportunity to present evidence and cross-examine witnesses.

If a hearing is requested, the Commission will make a final determination on the issue of no significant hazards consideration. The final determination will serve to decide when the hearing is held.

If the final determination is that the amendment request involves no significant hazards consideration, the Commission may issue the amendment and make it immediately effective, notwithstanding the request for a hearing. Any hearing held would take place after issuance of the amendment.

If the final determination is that the amendment request involves a significant hazards consideration, any hearing held would take place before the issuance of any amendment.

A request for a hearing or a petition for leave to intervene must be filed with the Secretary of the Commission, U.S. Nuclear Regulatory Commission, Washington, DC 20555, Attention: Docketing and Services Branch, or may be delivered to the Commission's Public Document Room, the Gelman Building, 2120 L Street NW., Washington, DC 20555, by the above date. Where petitions are filed during the last 10 days of the notice period, it is requested that the petitioner promptly so inform the Commission by a toll-free telephone call to Western Union at 1–(800) 248–5100 (in Missouri 1–(800) 342–6700). The Western Union operator should be given Datagram Identification Number N1023 and the following message addressed to Michael L. Boyle, Acting Director, Project Directorate I–2: Petitioner's name and telephone number, date petition was mailed, plant name, and publication date and page number of this **Federal Register** notice. A copy of the petition should also be sent to the Office of the General Counsel, U.S. Nuclear Regulatory

Commission, Washington, DC 20555, and to Mark J. Wetterhahn, Esquire, Winston and Strawn, 1400 L Street NW., Washington, DC 20005–3502, attorney for the licensee.

Nontimely filings of petitions for leave to intervene, amended petitions, supplemental petitions and/or requests for hearing will not be entertained absent a determination by the Commission, the presiding officer or the presiding Atomic Safety and Licensing Board that the petition and/or request should be granted based upon a balancing of the factors specified in 10 CFR 2.714(a)(1)(i)-(v) and 2.714(d).

For further details with respect to this action, see the application for amendment dated August 4, 1993, and supplemented by letter dated August 24, 1993, which are available for public inspection at the Commission's Public Document Room, the Gelman Building, 2120 L Street NW., Washington, DC 20555 and at the local public document room located at the Salem Free Public Library, 112 West Broadway, Salem, New Jersey 08079.

Dated at Rockville, Maryland, this 26th day of August 1993.

For the Nuclear Regulatory Commission.

James C. Stone,

Project Manager, Project Directorate I–2, Division of Reactor Projects—I/II, Office of Nuclear Reactor Regulation.

[FR Doc. 93–21236 Filed 8–31–93; 8:45 am]

BILLING CODE 7590–01–M

[Docket No. 70–27, License No. SNM–42, EA 93–012]

Babcock & Wilcox, Lynchburg, VA; Order, Imposing Civil Monetary Penalty

I

Babcock and Wilcox Company, Naval Nuclear Fuel Division (NNFD or Licensee) is the holder of Special Nuclear Material (SNM) License No. SNM–42 issued by the Nuclear Regulatory Commission (NRC or Commission) on May 31, 1984. The license authorizes the Licensee to fabricate nuclear fuel components for the Naval Reactor Program, research and university reactor components, and compact reactor fuels. The license also authorizes the licensee to perform recovery/disposal operations of scrap fuel generated by the NNFD or other organizations in accordance with the conditions specified therein. The license, originally issued on August 27, 1956, was last renewed on May 31, 1984, with an expiration date of August 31, 1989. The license is currently under timely renewal.

II

An inspection of the Licensee's activities was conducted on December 1, 1992–January 15, 1993, and January 16–February 5, 1993. The results of this inspection indicated that the Licensee had not conducted its activities in full compliance with NRC requirements. A written Notice of Violation and Proposed Imposition of Civil Penalty (Notice) was served upon the Licensee by letter dated April 6, 1993. The Notice stated the nature of the violations, the NRC requirements that had been violated, and the amount of the civil penalty proposed for the violations. The Licensee responded to the Notice by letters dated May 6, 1993. In its response, the Licensee admitted all the violations in Section I.A. except Violation I.A.1., which was denied. In addition, the licensee noted an inaccuracy in the recitation of this violation. The Licensee admitted Violation I.B with the exception of example 5 (five), which the Licensee denied. The Licensee also noted an incorrect statement in that example. The Licensee admitted Violation I.C and the violations cited in Section II. The Licensee disagreed with the NRC staff's assessment of the safety significance of the violations and the application of the escalation and mitigation factors. The Licensee also was of the view that the problems cited in the Notice of Violation did not justify a civil penalty of $37,500 when compared to problems at other fuel facilities which have been assessed civil penalties.

III

After consideration of the Licensee's responses and the statements of fact, explanation, and argument for mitigation contained therein, as well as all information concerning these matters available to date, the NRC staff has determined, as set forth in the Appendix to this Order, that the violations occurred as stated and that the penalty proposed for the violation designated in the Notice should be imposed.

IV

In view of the foregoing and pursuant to section 234 of the Atomic Energy Act of 1954, as amended (Act), 42 U.S.C. 2282, and 10 CFR 2.205, *it is hereby ordered that:*

The Licensee pay a civil penalty in the amount of $37,500 within 30 days of the date of this Order, by check, draft, money order, or electronic transfer, payable to the Treasurer of the United States and mailed to the Director, Office of Enforcement, U.S. Nuclear Regulatory Commission, ATTN: Document Control Desk, Washington, DC 20555.

V

The Licensee may request a hearing within 30 days of the date of this Order. A request for a hearing should be clearly marked as a "Request for an Enforcement Hearing" and shall be addressed to the Director, Office of Enforcement, U.S. Nuclear Regulatory Commission, ATTN: Document Control Desk, Washington, DC 20555. Copies also shall be sent to the Assistant General Counsel for Hearings and Enforcement at the same address and to the Director, Office of Enforcement, U.S. Nuclear Regulatory Commission, ATTN: Document Control Desk, Washington, DC 20555. Copies also shall be sent to the Assistant General Counsel for Hearings and Enforcement at the same address and to the Regional Administrator, NRC Region II, 101 Marietta Street NW., suite 2900, Atlanta, Georgia 30323.

If a hearing is requested, the Commission will issue an Order designating the time and place of the hearing. If the Licensee fails to request a hearing within 30 days of the date of this Order, the provisions of this Order shall be effective without further proceedings. If payment has not been made by that time, the matter may be referred to the Attorney General for collection.

In the event the Licensee requests a hearing as provided above, the issues to be considered at such hearing shall be:

(a) Whether the Licensee was in violation of the requirements set forth in Violation I.A.1 and example 5 of Violation I.B as set forth in the Notice, and

(b) Whether, on the basis of Violation I.A.1 and example 5 of Violation I.B, and the other violations in the Notice, which the Licensee has admitted, this Order should be sustained.

For the Nuclear Regulatory Commission.

Dated at Rockville, Maryland, this 20th day of August 1993.

James Lieberman,

Director, Office of Enforcement.

APPENDIX

Evaluation and Conclusion

On April 6, 1993, a Notice of Violation and Proposed Imposition of Civil Penalty (Notice) was issued for violations identified during an NRC inspection. Babcock and Wilcox NNFD responded in two letters dated May 6, 1993 that contained respectively an Answer and a Reply to the Notice. The licensee denied violation I.A.1 and example 5 of violation I.B. In addition,

the licensee disagreed with the NRC's characterization of the safety significance of the violations as reflected in the categorization of the violations as a Severity Level III problem, the application of the escalation and mitigation factors, and the amount of the proposed civil penalty.

The NRC's evaluation and conclusions regarding the licensee's responses are as follows:

I. Restatement of Violation I.A.1

On February 13, 1978, the nuclear criticality safety function authorized the handling of uranium solutions in the uranium recovery facility (URF) up to a maximum uranium concentration of 400 grams uranium per liter (facility limit) provided that the Raschig rings were maintained in accordance with ANSI–N16.4–1971 (1974 Standard) which was the predecessor of ANSI/ANS 8.5–1979. Special Nuclear Materials (SNM) License No. SNM–42 was renewed on May 31, 1984, and the requirements set forth below became effective.

License Condition No. 9 of License No. SNM–42 requires that licensed material be used in accordance with the statements, representatives, and conditions contained in Sections I through IV of the application (License Application) dated February 22, 1982, and supplements thereto.

Section III, Chapter 2, Paragraph 2.4 of the License Application specifies that "The Raschig rings will be used in accordance with Raschig ring standard (ANSI/ANS–85–1979)" (sic.)

Section 6.5.1 of American National Standards Institute/American Nuclear Society 8.5 dated 1979 (1979 Standard) requires inspections of Raschig rings used for primary criticality control, at intervals not exceeding 13 months, to be performed as described in Sections 6.1 through 6.4 of the Standard.

Section III, Chapter 1, Paragraph 1.2 of the License Application requires activities at Naval Nuclear Fuel Division (NNFD) involving special nuclear material to be conducted according to limits and controls established by Nuclear Criticality Safety (NCS) and approved by the Nuclear Licensing Board.

1. Section 5.5 of the 1971 and 1979 Standards requires the maximum solution concentration for a vessel to be based on Section 7 of the 1971 and 1979 Standards which specify, in part, that the maximum permissible concentration of homogeneous solutions of fissile materials in vessels packed with 32 glass volume percentage of borosilicate-glass Raschig rings is 400 grams of uranium per liter (gU/1).

Contrary to the above, activities involving special nuclear material were not conducted in accordance with the limits and controls established by NCS and approved by the Nuclear Licensing Board. Specifically, measurements made between December 16, 1992, and January 5, 1993, in the URF determined the glass volume fraction to be less than 32 percent in nine vessels where borosilicate Raschig rings were used as a nuclear criticality safety control. This condition may have existed since 1978 in that measurements made between November 1, 1978, and April 19, 1979, determined that the glass volume fraction in four of 12 vessels tested was less than 32 percent, while the facility was operated with an authorized facility limit of 400 gU/1.

Summary of Licensee's Response

The licensee stated that violation I.A.1 is incorrect and is not supported by the 1978 test results. The licensee contended that the measurement results from 1978 should have been rounded to the nearest whole number so that all tanks save one tested in 1978 contained glass volume fractions of at least 32%. The licensee also claimed that the one tank for which 1978 test results indicated glass volume fractions of 28.87% probably contained at least 32% glass after 1978 because the 1993 test results of this vessel indicated 32% glass volume fraction. The licensee also contended that although procedures were not in place to show technical compliance with the ANSI Standard, controls and other practices were in place to assure that other characteristics about the Raschig rings were maintained. Although volume fractions were not determined at 13 month intervals and volumes were less than required, the licensee is of the view that the overall program for maintaining Raschig rings did assure safe conditions.

NRC Evaluation of Licensee's Response

The NRC does not agree with the licensee's statement that the percent volume fractions should be rounded up. Normal scientific practice allows for the rounding of numbers as noted in the licensee's response, but such a practice is not acceptable in cases such as this where the glass volume fraction must meet a minimum standard of 32% in order for the licensee to be in compliance with a nuclear criticality safety limit. It is a fact admitted by the licensee that all the fractions referenced were less than 32% prior to rounding up. The licensee's conclusion that the one tank that tested at 28.87% in 1978 and greater than 32% in 1993 could be valid, but the licensee did not demonstrate whether the 32% was in effect during the intervening years or whether there were additions of Raschig rings during this time to increase a substandard volume fraction. The information provided by the licensee in the response did not include information demonstrating that the tanks met the requirement at all times nor did it provide any basis for disputing the fact that the licensee failed to conduct operations in accordance with Nuclear Criticality Safety, Nuclear Licensing Board and license requirements regarding the use of Raschig ring filled vessels. The licensee implies that this is a technical violation, since other characteristics concerning the Raschig rings were maintained. The NRC disagrees with this statement. Compliance with the ANSI standard was required by the licensee's NCS evaluations and all NCS evaluations performed for the affected operations assumed the ANSI standard requirements regarding the Raschig ring filled vessels were being maintained. The percent volume fraction is a key item in compliance, since the criticality safety limits used by the licensee assumed a certain minimum volume fraction to be present.

II. Restatement of Example 5 of Violation I.B

License Condition No. 9 of SNM–42 requires that licensed material be used in accordance with statements, representations, and conditions contained in Section I through IV of the application dated February 22, 1982, and supplements thereto.

Section III, Chapter 1, Paragraph 1.2 of the License Application requires activities at NNFD involving special nuclear material to be conducted according to limits and controls established by NCS and approved by the Nuclear Licensing Board. These limits and controls are provided to operating areas in nuclear criticality safety procedures and in nuclear criticality safety postings.

Section II, Paragraph 6.0 of the License Application requires activities to be conducted in accordance with approved written procedures.

Section II, Paragraph 6.3 of the License Application requires nuclear criticality safety procedures and postings to be established for operations involving licensed material. These procedures and postings are to be generated by NCS and reviewed and approved by the operating departments.

Nuclear Criticality Safety Procedures NCS–700 "General Nuclear Criticality Safety Requirements," Revision 1, dated June 11, 1991, requires, in part, any

operation involving the storing, moving, or processing of SNM to have: An approved operating procedure, an approved nuclear safety procedure, and an appropriate nuclear safety posting.

Contrary to the above, the licensee conducted activities involving SNM either without establishing or at variance with NCS limits and controls in that:

5. From approximately June 1991 to January 22, 1993, uranium metal contained in waste from the Research and Test Reactor Fuel Elements (RTRFE) facility was routinely stored on a storage rack which was posted with NCS postings prohibiting the storage of uranium metal on the rack.

Summary of Licensee's Response

The licensee disagreed with this violation based on its interpretation of the intent of the NCS posting in question. The licensee stated: "Although the sign posted on the rack did prohibit uranium metal from being placed on the rack, it was not intended that the prohibition would apply to small amounts of uranium metal dust from boxline cleanouts." The licensee indicated that dust was the only type metal placed on the rack. The licensee further indicated that the intent of the posting was understood by licensee personnel. The licensee also indicated that the licensee auditor who identified this item was confused over the intent of the sign.

NRC Evaluation of Licensee's Response

The licensee argues that the violation should not stand since licensee personnel understood the intent of the posting, i.e., the posting prohibition was not meant to apply to the storing of uranium dust from boxline cleanouts. The NRC does not agree with this argument for two reasons.

First, the requirement necessarily states that NCS limits and controls provided in work areas in the form of NCS procedures and postings must be followed. Compliance with this requirement is not, and cannot be dependent on the individual understanding of licensee personnel as to the intent of the control or posting. The licensee recognized this in its NNFD Policy Statement—Nuclear Criticality Safety, dated March 1991, signed by the Vice President and General Manager which requires licensee staff to strictly comply with all nuclear criticality safety limits and controls. Second, the fact that at least one member of the licensee's staff, i.e., the auditor who identified this item, was not clear on the intent of the posting undercuts the licensee's contention that its employees understood the intent of the posting.

III. Summary of Licensee's Request for Mitigation

The licensee contended that the problems cited in the Notice do not justify a civil penalty of $37,500 when compared to problems at other fuel facilities which have been assessed civil penalties. The licensee also disagreed with the NRC's characterization of the safety significance of the individual problems. The licensee asserted its belief that no limits and controls were violated and that unsafe conditions did not exist. The licensee indicated that the safety margins required by the license were met although the Raschig rings were not maintained as required. The licensee also asserted that affected operations were not shut down to perform NCS evaluations but only to perform tests required by the ANSI standard. The licensee indicated that contrary to NRC's statements, management was involved in and attentive to the NCS program which resulted in a decrease in NCS audit findings from 1990 through 1992. The licensee stated that most of the audit findings which were violations were not identified as violations and therefore did not attract appropriate management attention.

The licensee further argued that the NRC incorrectly applied the escalation and mitigation factors. The licensee indicated that the violations described in the Notice were licensee identified as a result of the internal NCS audit program and that 50 percent escalation based on this factor was incorrect. The licensee indicated mitigation for past performance should be applied because only two Severity Level IV violations had been identified in the area of nuclear criticality safety over the past four years and no violations were identified during the last two years and that the NRC inappropriately used currently identified problems in its assessment of past performance. The licensee also indicated that escalation of the civil penalty by 100 percent for prior opportunity to identify was not appropriate because the problems had been identified by licensee audits. Furthermore, the licensee disagreed with the assertion that corrective actions for a 1988 enforcement case (EA 88–225) should have directly lead to identification of the current problems. The licensee also disagreed with the 100 percent escalation for duration because, in the licensee's view, use of this factor is reserved for violations involving "particularly safety significant violations" or where a "significant regulatory message is warranted," none of which applied to the instant case.

NRC Evaluation of Licensee's Request for Mitigation

The NRC continues to view the violations collectively as a significant regulatory concern. The significance was not based upon an actual criticality safety occurrence, but on the potential for one and weaknesses in the system for establishing and maintaining criticality safety controls. The violations, when viewed together, represent significant failures by the licensee to establish and maintain nuclear criticality safety controls for certain critical plant operations. In addition, the licensee permitted the nuclear criticality safety audit function to operate contrary to internal procedures and in a manner in which safety findings were not promptly closed. The licensee admitted that the findings were not properly categorized so that appropriate management attention would be given to them. This represents a significant failure in the nuclear criticality safety program and cause for NRC concern. The violations were thus collectively categorized as a Severity Level III problem in accordance with the Enforcement Policy, 10 CFR part 2, appendix C, section IV. This application of the Enforcement Policy is consistent with that utilized for escalated enforcement cases with other NRC licensees.

The NRC disagrees with the licensee's contention that controls were sufficient for Raschig ring use although not in full compliance. The nuclear criticality safety function approved the facility limit of 400 grams of uranium per liter based on the provision that the borosilicate-glass Raschig rings, including percent volume, were maintained in accordance with the ANSI standard. Based on the evidence available, this was not done. The licensee failed to establish a program to assure the required nuclear criticality safety controls (i.e., percent volume of Raschig rings) were implemented and maintained. When the nuclear criticality safety audit function identified that data did not exist to demonstrate that tanks contained a sufficient volume of Raschig rings, no action was taken to correct the situation until the NRC pointed out the license requirement.

After finally measuring the Raschig ring volume in January 1993, the licensee was able to demonstrate, based on data used in the establishment of the ANSI standard, that a margin of safety had been maintained. This did not eliminate the fact that from approximately 1978 until 1993, the

licensee operated Raschig ring filled tanks without knowing the volume occupied by the rings, and thus without knowing whether the safety margin implicit in the ANSI standard was in place.

The licensee contended that the NNFD staff did not shut down affected operations to perform nuclear criticality safety evaluations to correct the Raschig ring issues in Violation I.A. The activities identified in example 1 of violation I.B, however, were discontinued when the licensee could not locate the nuclear criticality safety evaluations and after NRC discussion with the licensee. The fourth paragraph in NRC's letter dated April 6, 1993, does incorrectly imply that operations were shut down in regard to the Raschig rings to perform evaluations. This error, however, does not negate the NRC conclusion that licensee management did not provide adequate attention to establishing compliance for the Raschig ring volumes. The licensee did not shut down operations to determine compliance until after discussions with the NRC.

Involvement by licensee management in the nuclear criticality safety program was not clearly evident to the NRC. This observation is based on the above statements as well as the extended period of time audit findings remained open. The licensee admits that part of the problem was due to improperly characterized audit findings not reaching management's attention. The licensee correctly states that the number of audit findings decreased from 1990 to 1992, but, of equal significance was the length of time audit findings remained open. During a nuclear criticality safety assessment performed by the NRC in 1990, it was noted that audit findings were remaining open for an extended period of time. The licensee took some action to correct that situation, but it was not sufficient to prevent repeated failures to correct audit findings which were observed during the subject inspections.

The NRC acknowledges that licensee personnel identified certain issues during nuclear criticality safety audits, but these were not recognized by the licensee as violations of license conditions requiring prompt action to assure safety and compliance. For example, the NRC had to identify to licensee management on December 16, 1992, that they were committed in the license application to follow the specific ANSI Standard for Raschig rings, and that an inability to demonstrate compliance was a violation of the conditions of the license. This was followed by a Confirmation of Action Letter on December 18, 1992. Also, the failure to post certain equipment was identified after an extended period of time to be symptomatic of the failure to have nuclear criticality safety evaluations on file. Further evidence that indicated that the licensee did not recognize these as violations is supported by the licensee's May 6, 1993, answer to the violations, in which the licensee indicated that most of the audit findings were not recognized as violations. Since the licensee did not realize that these were violations of their license conditions and take corrective action in a timely manner until the NRC raised the issue, the licensee was not given credit for identification. Therefore, in considering the factor of identification, escalation of 50 percent was warranted because the majority of the violations were identified by the NRC or by the licensee's staff as a result of questions raised by the NRC. The discussion of this factor in Section VI.B.1(a) of the NRC Enforcement Policy indicates that the purpose of this factor is to encourage licensees to monitor, supervise, and audit activities in order to assure safety and compliance. Mitigation for this factor would be inappropriate and unsupported by the facts in this case.

With respect to licensee performance, poor performance in oversight of the nuclear criticality safety program was discussed above. Further, the discussion of the licensee performance factor in Section VI.B.1(c) of the Enforcement Policy does not limit consideration to only enforcement history. Prior performance, as defined in the Enforcement Policy, also includes the licensee's overall performance in regulated activities such as those that would be analogous to areas reviewed in the Systematic Assessment of Licensee Performance (SALP) evaluations for power reactors. In applying this factor, neither escalation nor mitigation was warranted because an offset was considered appropriate in balancing generally good recent enforcement history and overall general improvements in operations with poor performance in oversight of the Nuclear Criticality Safety program. For example, in 1990, the NRC identified 27 weaknesses in the Nuclear Criticality Safety program and issued two Severity Level IV violations in the Nuclear Criticality Safety area. Also, in 1992, other weaknesses were identified in the Nuclear Criticality Safety area regarding internal notification, maintenance of equipment and monitoring of criticality alarm warning system for operability. The staff also considered the enforcement action taken in connection with EA 91–159 issued on December 6, 1991, following an enforcement conference conducted on November 25, 1991. As a result of that enforcement action, a Severity Level IV violation was issued for the failure to conduct an adequate evaluation of the response of the radiation detectors in the nuclear criticality monitoring system. This generally poor performance in oversight of the Nuclear Criticality Safety program was viewed as a contravening data point that offset any mitigation for your overall recent good improvements in operations.

The NRC disagrees with the licensee's conclusions that escalation of 100 percent for prior opportunity was incorrectly applied. The licensee contended the NRC was incorrect in stating that corrective actions for a 1988 enforcement action would have led them to identify the Raschig ring problem. The 1988 enforcement action was for the failure to establish adequate controls to implement the double contingency principle associated with unfavorable geometry containers, which included some containers in and around the uranium recovery facility. The NRC concluded that since the corrective actions included a review of the controls associated with those containers, the licensee should have reviewed controls for all such unfavorable geometry containers including any containing Raschig rings. This would have led to discovery of the Raschig ring problem. Of more significance to NRC's decision to escalate, were the indications of problems. Identified by the audit program, which were not recognized as a violation sooner. The licensee's multiple opportunities to identify and correct the violations were taken into consideration and resulted in escalation of the civil penalty for this factor.

As stated in Section VI.B.2(f) of the Enforcement Policy, the duration factor is normally applied in cases involving particularly safety significant violations or where a significant regulatory message is warranted. The NRC considers the licensee's failure to: (1) Implement a significant license condition pertaining to nuclear criticality safety (NCS), (2) conduct activities involving SNM in accordance with NCS limits and controls, and (3) provide an appropriate level of management attention toward the NCS audit program to collectively be a significant regulatory concern. In addition, the licensee was either aware or clearly should have been aware of most of those violations which existed for a significant length of time.

Therefore, the NRC concluded that escalation of the civil penalty by 100 percent was warranted to provide a significant regulatory message to the licensee that emphasizes the importance of appropriate management attention to, and oversight of, the NCS control program.

NRC Conclusion

The NRC has concluded that the violations in question (Violation I.A.1 and example 5 of Violation I.B) occurred as stated and neither an adequate basis for a reduction of the severity level nor for mitigation of the civil penalty was provided by the licensee. Consequently, the proposed civil penalty in the amount of $37,500 should be imposed by Order.

[FR Doc. 93-21238 Filed 8-31-93; 8:45 am]

BILLING CODE 7590-01-M

[Docket No. 50-443; License No. NPF-86]

North Atlantic Energy Service Corp., (Seabrook Station, Unit No. 1); Order Approving Transfer of License

I

EUA Power Corporation is the holder of a 12.1324-percent ownership share in Seabrook Station, Unit No. 1. Its interest in Seabrook Station, Unit No. 1, is governed by License No. NPF 86 issued by the U.S. Nuclear Regulatory Commission (NRC), pursuant to part 50 of title 10 of the Code of Federal Regulations (10 CFR), on March 15, 1990, in Docket No. 50-443. Under this license, only North Atlantic Energy Service Corporation (NAESCO), acting as agent and representative of 12 joint owners listed in the license, has the authority to operate Seabrook Station, Unit No. 1. Seabrook Station, Unit No. 1, is located in Rockingham County, New Hampshire.

II

By letter of May 14, 1993, from its counsel, Ropes & Grey, NAESCO requested an amendment to License No. NPF-86, to reflect the transfer of control of EUA Power Corporation's 12.1324-percent ownership share in Seabrook Station, Unit No. 1, to Great Bay Power Corporation. Great Bay Power Corporation is the surviving entity emerging from the bankruptcy proceedings of EUA Power Corporation.

The transfer of any right under License No. NPF-86 is subject to the NRC's approval pursuant to 10 CFR 50.80(a). On the basis of information provided in the May 14, 1993, letter from Ropes & Grey and other information before the Commission, the NRC staff has determined that Great Bay Power Corporation is qualified to be a holder of License No. NPF-86 and that the license transfer is otherwise consistent with applicable provisions of law, regulations, and orders issued by the Commission.

III

Accordingly, pursuant to sections 161b, 161i, and 184 of the Atomic Energy Act of 1954, as amended, 42 U.S.C. 2201 et seq., and 10 CFR 50.80, it is hereby ordered that the transfer of control of EUA Power Corporation's 12.1324 -percent ownership share in Seabrook Station, Unit No. 1, through bankruptcy proceedings, with Great Bay Power Corporation emerging as the surviving entity, is approved subject to the following: (1) Should the transfer not be completed by February 15, 1994, this order will be null and void, and (2) on application and for good cause shown, this order may be extended for a short period beyond February 15, 1994.

Dated at Rockville, Maryland, this 16th day of August 1993.

For the Nuclear Regulatory Commission.

Thomas E. Murley,

Director, Office of Nuclear Reactor Regulation.

[FR Doc. 93-21232 Filed 8-31-93; 8:45 am]

BILLING CODE 7590-01-M

SECURITIES AND EXCHANGE COMMISSION

[Rel. No. IC-19661; 812-7794]

American Capital Comstock Fund, Inc., et al.; Application

August 26, 1993.

AGENCY: Securities and Exchange Commission ("SEC").

ACTION: Notice of Application for an Order under the Investment Company Act of 1940 (the "Act").

APPLICANTS: American Capital Comstock Fund, Inc., American Capital Enterprise Fund, Inc., American Capital Equity Income Fund, Inc., American Capital Growth and Income Fund, Inc., American Capital Life Investment Trust—Common Stock Portfolio, American Capital Life Investment Trust—Multiple Strategy Portfolio, American Capital Pace Fund, Inc., Common Sense Growth Fund, Common Sense Growth and Income Fund (collectively, the "Public Funds"), American Capital Small Capitalization Fund, Inc. (the "Small Cap Fund"), and American Capital Asset Management, Inc. ("American Capital").

RELEVANT ACT SECTIONS: Section 45(a).

SUMMARY OF APPLICATION: Applicants seek an order under section 45(a) that would declare that public disclosure of information submitted in support of another application and relating to anticipated annual cost savings is neither necessary nor appropriate in the public interest or for the protection of investors. In the other application (File No. 812-7795), applicants seek an order that would permit the Small Cap Fund to serve exclusively as an investment vehicle through which the Public Funds would invest portions of their assets in a portfolio of small capitalization stocks.

FILING DATE: The application was filed on September 30, 1991 and amended on April 29, 1992.

HEARING OR NOTIFICATION OF HEARING: An order granting the application will be issued unless the SEC orders a hearing. Interested persons may request a hearing by writing to the SEC's Secretary and serving applicant with a copy of the request, personally or by mail. Hearing requests should be received by the SEC by 5:30 p.m. on September 20, 1993, and should be accompanied by proof of service on applicants, in the form of an affidavit, or, for lawyers, a certificate of service. Hearing requests should state the nature of the writer's interest, the reason for the request, and the issues contested. Persons may request notification of a hearing by writing to the SEC's Secretary.

ADDRESSES: Secretary, SEC, 450 5th Street NW., Washington, DC 20549. Applicants, 2800 Post Oak Blvd., Houston, Texas 77056.

FOR FURTHER INFORMATION CONTACT: Felice R. Foundos, Staff Attorney, at (202) 272-2190 or Robert A. Robertson, Branch Chief, at (202) 272-3030 (Division of Investment Management, Office of Investment Company Regulation).

SUPPLEMENTARY INFORMATION: The following is a summary of the application. The complete application may be obtained for a fee at the SEC's Public Reference Branch.

Applicants' Representations

1. The Small Cap Fund is an open-end management investment company for which American Capital serves as investment adviser. The Small Cap Fund intends to invest at least 80% of its assets in equity securities of companies with a market capitalization less than that of the largest 500 publicly-traded companies.

2. The Public Funds are open-end management investment companies for which American Capital serves as

investment adviser or subadviser with investment discretion over the entire portfolio. Limited investment in the small capitalization sector of the securities markets is an appropriate part of the investment strategy of each of the Public Funds.

3. Applicants have filed another application (File No. 812-7795) requesting an order under sections 6(c) and 17(b) of the Act that would exempt applicants from sections 12(d)(1), 17(a)(1), and 17(a)(2), and under section 17(d) and rule 17d-1 thereunder permitting certain transactions. The order would permit the Public Funds to invest portions of their assets in the Small Cap Fund.

4. In support of the other application, applicants submitted information relating to anticipated annual cost savings comparing the difference in cost that brokers might experience if they executed certain orders for only one fund, rather than executing orders for the same aggregate number and value of shares, but for a number of funds.

Applicants' Legal Analysis

1. Section 45(a) provides that the information contained in any application filed with the SEC under the Act shall be made available to the public, unless and except insofar as the SEC finds that public disclosure is neither necessary nor appropriate in the public interest or for the protection of investors.

2. Applicants request an order under section 45(a) for the information they submitted to support their contention that an order enabling the Public Funds to invest in the Small Cap Fund would be likely to produce cost savings for the Public Funds. Applicants believe that it is possible for an interested person to understand and evaluate applicants' contention without knowing the precise amount of the cost savings that might be realized. Applicants believe, therefore, that disclosure of the information is not necessary in the public interest or for the protection of investors.

3. Applicants also believe that public disclosure of the information could result in harm to Public Fund shareholders. American Capital intends to try to negotiate lower brokerage commissions on the basis of anticipated cost savings to be realized by brokers. American Capital believes that its negotiating position would be weakened if the brokers knew exactly what American Capital believed those savings to be. Applicants believe, therefore, that public disclosure of the information is not appropriate in the public interest or for the protection of investors.

4. The Freedom of Information Act (5 U.S.C. 552) generally provides that all information provided to or generated by the government should be made available to the general public, with certain exceptions set forth in the statute. One of those exceptions is for "trade secrets and commercial or financial information obtained from a person and privileged or confidential." Applicants believe that the information that is the subject of this application falls within the exception described, and it thus is eligible for protection under the Freedom of Information Act.[1]

For the SEC, by the Division of Investment Management, under delegated authority.

Margaret H. McFarland,

Deputy Secretary.

[FR Doc. 93-21277 Filed 8-31-93; 8:45 am]

BILLING CODE 8010-01-M

[Rel. No. IC-19660; 812-7795]

American Capital Comstock Fund, Inc., et al.; Application

August 26, 1993.

AGENCY: Securities and Exchange Commission ("SEC.").

ACTION: Notice of application for exemption under the Investment Company Act of 1940 (the "Act").

APPLICANTS: American Capital Comstock Fund, Inc. ("Comstock Fund"), American Capital Enterprise Fund, Inc. ("Enterprise Fund"), American Capital Equity Income Fund, Inc. ("Equity Income Fund"), American Capital Growth and Income Fund, Inc. ("Growth and Income Fund"), American Capital Life Investment Trust-Common Stock Portfolio and American Capital Life Investment Trust-Multiple Strategy Portfolio ("Life Trust"), American Capital Pace Fund, Inc. ("Pace Fund"), Common Sense Growth Fund ("CS Growth Fund"), Common Sense Growth and Income Fund ("CSG & I Fund") (collectively, the "Public Funds"), American Capital Small Capitalization Fund, Inc. (the "Small Cap Fund"), and American Capital Asset Management, Inc. ("American Capital").

RELEVANT ACT SECTIONS: Order requested under sections 6(c) and 17(b) of the Act exempting applicants from sections 12(d)(1), 17(a)(1), and 17(a)(2), and under section 17(d) and rule 17d-1 thereunder permitting certain transactions.

SUMMARY OF APPLICATION: Applicants seek an order to permit the Small Cap Fund to serve exclusively as an investment vehicle through which the Public Funds would invest portions of their assets in a portfolio of small capitalization stocks.

FILING DATE: The application was filed on September 30, 1991 and amended on April 29, 1992, November 23, 1992, and April 26, 1993. Applicants have agreed to file an additional amendment, the substance of which is incorporated herein, during the notice period.

HEARING OR NOTIFICATION OF HEARING: An order granting the application will be issued unless the SEC orders a hearing. Interested persons may request a hearing by writing to the SEC's Secretary and serving applicants with a copy of the request, personally or by mail. Hearing requests should be received by the SEC by 5:30 p.m. on September 20, 1993, and should be accompanied by proof of service on applicants, in the form of an affidavit, or, for lawyers, a certificate of service. Hearing requests should state the nature of the writer's interest, the reason for the request, and the issues contested. Persons may request notification of a hearing by writing to the SEC's Secretary.

ADDRESSES: Secretary, SEC, 450 5th Street NW., Washington, DC 20549. Applicants, 2800 Post Oak Blvd., Houston, Texas 77056.

FOR FURTHER INFORMATION CONTACT: Felice R. Foundos, Staff Attorney, at (202) 272-2190 or Robert A. Robertson, Branch Chief, at (202) 272-3030 (Division of Investment Management, Office of Investment Company Regulation).

SUPPLEMENTARY INFORMATION: The following is a summary of the application. The complete application may be obtained for a fee at the SEC's Public Reference Branch.

Applicants' Representations

1. The Small Cap Fund is an open-end management investment company for which American Capital serves as investment adviser. The Small Cap Fund intends to invest at least 80% of its assets in equity securities of companies with a market capitalization less than that of the largest 750 publicly-traded companies. Although the Small Cap Fund is registered under the Act, it does not intend to make a public offering of its shares, and has not registered under the Securities Act of 1933.

2. American Capital will not charge any advisory fee for managing the Small Cap Fund, and there will be no sales

[1] Applicants recognize that any order granting the confidential treatment requested will be issued under section 45(a) only, and that any such order will not be dispositive of any Freedom of Information Act request filed by a third party.

load or other charge associated with distribution of the Small Cap Fund's shares. The Small Cap Fund will bear the other expenses it incurs, and such expenses thus will be borne indirectly by the Public Funds that invest in the Small Cap Fund.

3. The Public Funds are open-end management investment companies for which American Capital serves as investment adviser or subadviser with investment discretion over the entire portfolio. In future, the Public Funds may include any open-end management investment company for which American Capital becomes investment adviser or subadviser with investment discretion over the entire investment portfolio. Limited investment in the small capitalization sector of the securities markets is an appropriate part of the investment strategy of each of the Public Funds. Applicants seek an order that would permit the Public Funds to achieve this aspect of their investment strategy, in part, by investing in the Small Cap Fund.[1] Although the Public Funds differ with respect to the portion of total assets that they might invest in the small capitalization sector, their investment objectives and strategies with respect to that sector are identical.

4. Applicants expect that the initial investments in the Small Cap Fund will be the following. Comstock Fund will invest 3.5% of its net assets; Enterprise Fund will invest 10% of its net assets; Pace Fund will invest 8% of its net assets; CS Growth Fund will invest 10% of its net assets; and CSG & I Fund will invest 3.5% of its net assets. Based upon asset levels at September 30, 1992, these investments would have represented 6.8%, 14.9%, 39.6%, 34.3% and 4.3%, respectively, of the Small Cap Fund's assets.

5. American Capital believes that providing the Public Funds with a single investment vehicle that will invest in a broadly diversified portfolio of small capitalization stocks will provide the Public Funds with the most effective exposure to the performance of the small capitalization sector while simultaneously minimizing costs. American Capital expects the Small Cap Fund to invest in securities of 400 to 500 issuers to provide broad exposure to all elements of the small capitalization sector. In this regard, the Small Cap Fund will be more diversified than a Public Fund, which might—without the ability to invest in the Small Cap Fund—own securities of 20 to 30 small capitalization issuers. American Capital expects that the Small Cap Fund's diversification will benefit both the Small Cap Fund and the Public Funds by providing greater price stability and lower volatility, while capturing the performance benefits of broad exposure to the small capitalization sector.

6. American Capital expects the Small Cap Fund to increase the efficiency of the Public Funds' portfolio management. Because small capitalization issuers have smaller capitalization than other issuers, a Public Fund's investment of even 7% of its assets in the small capitalization sector might be spread across 20–25% of the total number of issues it owns. Thus the Public Fund's portfolio manager would have to spend a disproportionate amount of time following a large number of issuers that represent only a small portion of the Public Fund's total assets. By investing in the Small Cap Fund instead, the Public Fund would gain the benefit of exposure to the small capitalization sector without sacrificing a disproportionate amount of the portfolio manager's time.

7. When the Small Cap Fund begins operations, each Public Fund will exchange cash and small capitalization stocks from its portfolio for Small Cap Fund shares. The small capitalization stocks will be appropriate investments for the Small Cap Fund. The Small Cap Fund is likely to sell some of the stocks contributed by the Public Funds and use the proceeds to diversify its portfolio. After this beginning stage, American Capital expects both the transaction volume and turnover rate for the Small Cap Fund to be relatively small. It is likely that the Public Funds will buy or sell shares of the Small Cap Fund monthly or quarterly, rather than daily or weekly. This practice will reduce the Small Cap Fund's need to buy or sell portfolio securities to meet its cash flow needs.

8. Each Public Fund may have, in addition to its holdings in the Small Cap Fund, some direct investments in small capitalization stocks. American Capital has adopted a procedure to avoid unnecessary expense that could occur if the Small Cap Fund were to sell a particular stock at the same time a Public Fund were to purchase it, or vice versa. The Small Cap Fund will generate a list of stocks that it intends to purchase or sell, and will circulate the list among the portfolio managers of the Public Funds. If any Public Fund's portfolio manager wishes to buy or sell a stock on the list, the Small Cap Fund will effect the transaction directly with that Public Fund. The value of the stock will be the current market price, determined in accordance with rule 17a–7. Payment will be made by simultaneous transfer of cash or, if the Public Fund wishes to alter its investment in the Small Cap Fund, of Small Cap Fund shares with an equal value.

9. Applicants expect that the Small Cap Fund will have the same board of directors as Comstock Fund, Enterprise Fund, Equity Income Fund, Growth and Income Fund, Life Trust, and Pace Fund. Applicants believe that the board of directors will not be subject to conflicts of interest because the Small Cap Fund, as a vehicle for investment in the small capitalization sector, will serve the same purpose for each of the Public Funds. Moreover, American Capital has adopted procedures to ensure that the cost of any transaction that might benefit one Public Fund at the expense of the others will be borne by the Public Fund for whose benefit the transaction is executed.

10. To minimize the need for the Small Cap Fund to maintain large cash balances, American Capital will coordinate the Public Funds' purchases and sales of Small Cap Fund shares to minimize cash flows into and out of the Small Cap Fund. Initially, this will be accomplished by informal communication among portfolio managers. American Capital will monitor this process. If informal communications prove insufficient, American Capital will implement more formal procedures to ensure that communications take place in a timely and efficient manner.

11. American Capital believes that it will be able to coordinate purchases and redemptions of Small Cap Fund shares in virtually all instances. There may be occasions, however, when a single Public Fund purchases or redeems an unusually large amount of Small Cap Fund shares. Such a large transaction could cause the Small Cap Fund, and thus the Public Funds not involved in the transaction, to bear significant incremental trading costs associated with the acquisition or disposition of small capitalization stocks. Accordingly, if a Public Fund plans to make an unusually large purchase or redemption of Small Cap Fund shares, American Capital, as a fiduciary to all of the Public Funds and the Small Cap Fund, will cause the transaction to be executed in kind. In the case of a purchase, the Public Fund would acquire small capitalization stocks and exchange them for Small Cap Fund shares. For a redemption, the Small Cap Fund would

[1] American Capital is the investment adviser for two investment companies, American Capital Emerging Growth Fund, Inc. and the Emerging Growth Portfolio of WRL Series Fund, Inc., that invest most of their assets in the small capitalization sector. These investment companies will not invest in the Small Cap Fund, and are not parties to the application.

deliver small capitalization stocks to the Public Fund, which the Public Fund could then sell.

12. Each Public Fund's investment in the Small Cap Fund will be subject to the disclosure requirements of Guide 3 of the Guidelines for the Preparation and Filing of Form N–1A. The level of disclosure in the Public Fund's prospectus will correspond to the level of its investment in the Small Cap Fund. A Public Fund that invests less than 5% of its net assets in the Small Cap Fund will include a brief description of the Small Cap Fund, and a Public Fund that invests 5% or more of its net assets in the Small Cap Fund will include a more detailed description of the Small Cap Fund, its objectives, risks, and manner of operations.

Applicant's Legal Analysis

1. Section 12(d)(1)(A) provides that no registered investment company may acquire securities of another investment company representing more than 3% of the acquired company's outstanding voting stock, more than 5% of the acquiring company's total assets, or, together with the securities of other investment companies, more than 10% of the acquiring company's total assets. Section 12(d)(1)(B) provides that no registered open-end investment company may sell its securities to another investment company if the sale will cause the acquiring company to own more than 3% of the acquired company's voting stock, or if the sale will cause more than 10% of the acquired company's voting stock to be owned by investment companies.

2. Applicants request an exemption from section 12(d)(1) because, among other things, the Public Funds will own 100% of the stock of the Small Cap Fund, and a Public Fund's investment in the Small Cap Fund may represent more than 5% of that Public Fund's total assets. Applicants believe that the Small Cap Fund and the Public Funds will not be subject to any of the abuses that section 12(d)(1) was intended to prevent. For example, no Public Fund will be able to exercise undue influence over the management of the Small Cap Fund because the possibility that the Public Funds may redeem large amounts of Small Cap Fund shares will not disrupt the orderly management of the Small Cap Fund. The Small Cap Fund's ability to honor redemption requests with an in kind distribution of small capitalization stocks—rather than cash—will mitigate the costs associated with a large redemption. In addition, the Small Cap Fund will not cause investors in the Public Funds to bear two layers of costs. The Small Cap Fund will pay no advisory fee, and its shares will not be subject to any sales load or rule 12b–1 fee.

3. Applicants also request an exemption from section 17(a), which prohibits certain purchases and sales of securities between investment companies and their affiliated persons, as defined in section 2(a)(3). The Small Cap Fund and the Public Funds may be deemed to be under common control because American Capital is the investment adviser to all of them. Each of the Small Cap Fund and the Public Funds, therefore, would be an affiliated person of each other within the meaning of section 2(a)(3). Thus, purchases or sales of securities between the Small Cap Fund and a Public Fund may violate section 17(a).

4. Sections 6(c) and 17(b) set forth the standards for exempting a series of transactions from section 17(a). Under section 17(b), the terms of any such transaction must be reasonable and fair and must not involve overreaching on the part of any person, the transaction must be consistent with the policy of each investment company concerned, and the transaction must be consistent with the general purposes of the Act. In addition, under section 6(c), the exemption must be necessary or appropriate in the public interest, consistent with the protection of investors, and consistent with the purposes fairly intended by the policy and provisions of the Act.

5. Applicants believe that the proposed transactions meet the standards for relief under sections 6(c) and 17(b). Applicants believe that the terms of the transactions between the Small Cap Fund and the Public Funds are reasonable and fair and do not involve overreaching. The consideration paid and received for the purchase and redemption of Small Cap Fund shares will be based on the net asset value of the Small Cap Fund. The Small Cap Fund will not pay an advisory fee, and there will be no sales load or other charge associated with distribution of the Small Cap Fund's shares. Applicants believe that the transactions are consistent with the policies of the Public Funds and the Small Cap Fund. The Public Funds' investments in the Small Cap Fund, and the Small Cap Fund's issuance of shares, will be in accordance with each investment company's investment restrictions and policies. Applicants also believe that the transactions are consistent with the general purposes of the Act. Section 17(a) was intended to prohibit affiliated persons from furthering their own interests by, for example, selling property to an investment company at an inflated price or purchasing property from an investment company at less than fair value, and applicants believe that their proposal does not present those concerns.

6. Section 17(d) makes it unlawful for an affiliated person of a registered investment company to effect any transaction in which the company is a joint participant in contravention of SEC rules. Rule 17d–1 prohibits an affiliated person of any registered investment company, acting as principal, from participating in or effecting any transaction in a "joint enterprise or other joint arrangement" in which the company is a participant, without prior SEC approval. In considering a request for such approval, the SEC must consider whether the investment company's participation in the arrangement is "consistent with the provisions, policies and purposes of the Act and the extent to which such participation is on a basis different from or less advantageous than that of other participants." The participation of American Capital, the Public Funds, and the Small Cap Fund in the proposed transactions could constitute a joint enterprise or other joint arrangement within the meaning of rule 17d–1. Applicants believe that the proposed arrangement is consistent with the provisions, policies, and purposes of the Act because the sole purpose of the arrangement is to provide an efficient vehicle through which the Public Funds may invest in small capitalization stocks. In addition, applicants believe that the Public Funds will participate on an equal basis with each other, and that the participation of the Public Funds and the Small Cap Fund in the proposed arrangement will not be on basis less advantageous than American Capital's because American Capital will receive no advisory fee or other compensation from the Small Cap Fund.

Applicants' Conditions

Applicants agree that any order granting the exemptions they request will be subject to the following conditions:

1. Shares of the Small Cap Fund will not be subject to a sales load or redemption fee, and the Small Cap Fund will not have a distribution fee under a plan adopted in accordance with rule 12b–1.

2. American Capital will not charge any advisory fee for managing the Small Cap Fund.

3. Investment in shares of the Small Cap Fund will be in accordance with each Public Fund's respective investment restrictions and will be consistent with its policies as recited in

its registration statement and prospectus.

4. The Board of Directors of each Public Fund will determine, at least annually, that investment in the Small Cap Fund is in the best interest of the shareholders of the Public Fund, based upon a review of (a) the benefits to the Public Fund of using the Small Cap Fund to invest in the small capitalization sector, and (b) the expenses borne by the Public Fund as a result of its investment in the Small Cap Fund.

5. Each Public Fund will, as part of its reports to shareholders under section 30(d) of the Act and rule 30d–1 thereunder, include a listing of the securities held by the Small Cap Fund and the amount and value of such Public Fund's *pro rata* interest in each such security to the same extent as if such securities or interests therein were held directly by such Public Fund.

By the Commission.

Margaret H. McFarland,

Deputy Secretary.

[FR Doc. 93–21278 Filed 8–31–93; 8:45 am]

BILLING CODE 8010–01–M

[Rel. No. IC–19659; 811–4230]

Colonial Advanced Strategies Gold Trust; Application

August 26, 1993.

AGENCY: Securities and Exchange Commission ("SEC" or "Commission").

ACTION: Notice of application for deregistration under the Investment Company Act of 1940 (the "Act").

APPLICANT: Colonial Advanced Strategies Gold Trust.

RELEVANT ACT SECTION: Section 8(f).

SUMMARY OF APPLICATION: Applicant seeks an order declaring that it has ceased to be an investment company.

FILING DATE: The application was filed on June 7, 1993 and amended on August 9, 1993.

HEARING OR NOTIFICATION OF HEARING: An order granting the application will be issued unless the SEC orders a hearing. Interested persons may request a hearing by writing to the SEC's Secretary and serving applicant with a copy of the request, personally or by mail. Hearing requests should be received by the SEC by 5:30 p.m. on September 20, 1993, and should be accompanied by proof of service on applicant, in the form of an affidavit or, for lawyers, a certificate of service. Hearing requests should state the nature of the writer's interest, the reason for the request, and the issues contested. Persons may request notification of a hearing by writing to the SEC's Secretary.

ADDRESSES: Secretary, SEC, 450 5th Street NW., Washington, DC 20549. Applicant, One Financial Center, Boston, Massachusetts 02111.

FOR FURTHER INFORMATION CONTACT: Elaine M. Boggs, Staff Attorney, at (202) 272–3026, or Robert A. Robertson, Branch Chief, at (202) 272–3030 (Division of Investment Management, Office of Investment Company Regulation).

SUPPLEMENTARY INFORMATION: The following is a summary of the application. The complete application may be obtained for a fee at the SEC's Public Reference Branch.

Applicant's Representations

1. Applicant is an open-end management investment company that was organized as a business trust under the laws of Massachusetts. On February 14, 1985, applicant registered under the Act as an investment company, and filed a registration statement to register its shares under the Securities Act of 1933. The registration statement was declared effective on May 10, 1985, and an initial public offering commenced on June 28, 1985.

2. On April 12, 1991 and December 13, 1991, applicant's board of trustees approved an agreement and plan of reorganization (the "Plan") between applicant and Colonial Natural Resources Fund ("Natural Resources"), a newly formed series of Colonial Trust III—a registered management investment company. In addition, on December 13, 1991 and February 28, 1992, the board of trustees made the findings required by rule 17a–8 under the Act.[1]

3. On April 17, 1992, applicant mailed proxy materials to its shareholders. At a meeting held on May 15, 1992, applicant's shareholders approved the reorganization.

4. Pursuant to the Plan, on June 5, 1992, applicant transferred all of its assets to Natural Resources in consideration of Natural Resources' shares with the equivalent net asset value. The shares then were credited in open accounts in the names of applicant's former shareholders. On the date of the reorganization, applicant had 3,269,520 shares outstanding, having an aggregate net asset value of $32,698,964 and a per share net asset value of $10.

5. All expenses incurred in connection with the reorganization were borne by applicant and totaled $53,478.

6. There are no securityholders to whom distributions in complete liquidation of their interest have not been made. Applicant has no debts or other liabilities that remain outstanding. Applicant is not a party to any litigation or administrative proceeding.

7. Applicant will file certificates of dissolution with Massachusetts authorities after the requested order is obtained.

8. Applicant is not now engaged, nor does it propose to engage, in any business activities other than those necessary for the winding up of its affairs.

For the Commission, by the Division of Investment Management, pursuant to delegated authority.

Margaret H. McFarland,

Deputy Secretary.

[FR Doc. 93–21279 Filed 8–31–93; 8:45 am]

BILLING CODE 8010–01–M

[1] Rule 17a–8 provides an exemption from section 17(a) for certain reorganizations among registered investment companies that may be affiliated persons, or affiliated persons of an affiliated person, solely by reason of having a common investment adviser, common directors, and/or common officers.

[Release No. 34–32793; File No. SR–NYSE–93–04]

Self-Regulatory Organizations; New York Stock Exchange, Inc.; Order Approving Proposed Rule Change Relating to the Listing and Trading of Quarterly Index Expiration Options Based on the New York Stock Exchange Composite Stock Index and Notice of Filing of Amendment No. 1 Relating to the Listing and Trading of Quarterly Index Expiration Options Based on the New York Stock Exchange Utility Index

August 24, 1993.

I. Introduction

On January 15, 1993, the New York Stock Exchange, Inc. ("NYSE" or "Exchange") submitted to the Securities and Exchange Commission ("Commission" or "SEC"), pursuant to Section 19(b)(1) of the Securities Exchange Act of 1934 ("Act")[1] and Rule 19b–4 thereunder,[2] a proposed rule change to provide for the listing and trading of options on the NYSE Composite Stock Index ("NYA") that will expire on the second business day following the end of each calendar quarter ("Quarterly Index Expirations" or "QIXs"). Currently, all equity and stock index options traded on the Exchange expire on the Saturday immediately following the third Friday

[1] 15 U.S.C. § 78s(b)(1) (1982).

[2] 17 CFR 240.19b–4 (1993).

of the expiration month. The NYSE intends to trade QIXs on the NYA ("QIX NYA") in addition to the existing NYA Index options expiring at the middle of the month.

Notice of the proposed rule change appeared in the **Federal Register** on March 31, 1993.[3] No comments were received on the proposed rule change. On March 17, 1993, the NYSE filed Amendment No. 1 in order to allow the Exchange to list and trade QIX options on the NYSE Utility Index. The Commission is approving the part of the proposal relating to QIX options on the NYA, while at the same time, publishing for comment the NYSE's filing of Amendment No. 1.[4]

II. Description of the Proposal

The Exchange proposes to add Supplementary Material .20 (a)(iii) to Rule 703 to provide for the listing of up to eight near-term quarterly expirations on NYA options. The NYSE would be permitted at any one time to have up to eight QIX NYA options open for trading with expiration on the second business day following the end of a calendar quarter. Presently, options traded at the NYSE expire on the Saturday following the third Friday of the expiration month.[5] Accordingly, QIXs will expire approximately two weeks apart from existing NYA options expirations in the quarterly month expiration.

The proposed QIX options will trade simultaneously with, not independent of, currently listed and traded NYA options. The proposed QIX options will be subject to the same rules that presently govern the trading of existing NYA options contracts, including sales practice rules, margin requirements, and floor trading procedures. Contract terms for the QIX options will be similar to the corresponding NYA options that presently trade on the Exchange. For example, QIX options on the NYA will have European-style exercise,[6] with the daily exercise settlement value based on the index value derived from the opening prices of its component stocks on the first business day following the end of the calendar quarter. In addition, the multiplier for QIX options may in the discretion of the Exchange be set at a level of up to 500 (in order to offer large-sized index contracts), instead of the customary 100 multiplier.[7]

With regard to position and exercise limits,[8] the NYSE proposes that QIX NYAs be aggregated with and treated identically to existing NYA options. Specifically, options on the NYA (QIX and non-QIX) are limited to 45,000 contracts on the same side of the market with no more than 25,000 contracts in the series having the nearest expiration.[9] The number of contracts in any QIX position having a multiplier other than 100 must be equalized to account for differences in index multipliers.[10] Therefore, for purposes of position and exercise limits, the number of NYA option contracts is derived by multiplying the number of contracts by the index multiplier and dividing the product by 100.

III. Discussion

The Commission finds that the proposed rule change is consistent with the requirements of the Act and the rules and regulations thereunder applicable to a national securities exchange, and, in particular, the requirements of Section 6(b)(5).[11] In particular, the Commission believes that the proposed rule change is designed to provide investors with a tailored quarterly portfolio hedge that may be more suitable to their investment needs. Specifically, by providing investors with the ability to use QIX options that settle based on the opening value of component stocks on the business day prior to expiration (*i.e.* at the opening of business on the first business day following the end of a calendar quarter), the NYSE proposal will allow investors increased flexibility to tailor their portfolio positions to satisfy their investment objectives. For instance, according to the NYSE, the performance of portfolio managers and institutional investors is judged on a quarterly basis.[12] Therefore, in the past, these investors have been forced to pursue "quarterly hedges" in the over-the-counter ("OTC") market employing forwards, options, and/or swaps. Accordingly, the Commission believes the NYSE proposal is a reasonable response by the Exchange to meet the demands of sophisticated portfolio managers and other institutional investors who are increasingly using the OTC market in order to satisfy their hedging needs, and will thereby promote competition among these markets.[13]

In addition, the Commission believes that the NYSE proposal will help to promote the maintenance of a fair and orderly market because the purpose of the proposal is to extend the benefits of a listed, exchange market in NYA options to quarterly calendar expirations. The attributes of the Exchange's NYA options market versus an OTC market include, but are not limited to, a centralized market center, an auction market with posted market quotations and transaction reporting, standardized contract specifications, parameters and procedures for clearance and settlement, and the guarantee of the Options Clearing Corporation ("OCC") for all contracts traded on the Exchange.

[3] *See* Securities Exchange Act Release No. 32048 (March 25, 1993), 58 FR 16895.

[4] On August 2, 1993, the Exchange filed with the Commission a clarifying amendment confirming that the NYSE intends to initially introduce QIX options limited to a multiplier of 100. In addition, the Exchange further clarified that positions in QIX options will be aggregated with positions in other NYSE-traded options based on the same index stock group. *See* letter from Daniel P. Odell, Assistant Secretary, NYSE, to Richard Zack, Branch Chief, Division of Market Regulation, SEC, dated July 29, 1993. Because this amendment is technical in nature and merely clarifies the NYSE proposal without substantive change, it has not been separately published for comment and is being approved herein.

[5] The NYSE trades index options with expirations of up to one year in length that expire at three month intervals. The Exchange allows for up to five expiration months with none farther out than twelve months. In addition, the NYSE also trades long-term index options that may expire three years from listing named "long-term series." The NYSE is not now proposing to list or trade QIX options with more than twelve months to expiration. Any such proposal would be filed with the Commission for review under Section 19(b) of the Act.

[6] A European-style option is one that may only be exercised by the holder during a specified period prior to expiration.

[7] The Exchange believes that increased contract size may be justified due to the larger portfolios now being managed by institutional investors. The NYSE's rules provide that position limits will be accordingly adjusted if the multiplier is other than 100. Initially, the Exchange intends to use only the 100 multiplier. The NYSE has stated that it will notify the Commission and submit an appropriate proposed rule change on Form 19b-4 prior to trading options with a multiplier other than 100. *See supra* note 4.

[8] Position limits are the maximum number of option contracts permitted on the same side of the market with respect to a single underlying interest that may be held or written by a single investor or group of investors acting in concert. Exercise limits are the maximum number of option contracts on the same side of the market on the same underlying interest that a single investor or group of investors acting in concert may exercise during any five consecutive business days.

[9] The hedge exemption found in NYSE Rule 704(c)(ii) is applicable to QIX and non-QIX NYA options up to an aggregate maximum position of 125,000 contracts on the same side of the market.

[10] As described in note 7, *supra*, the use of an index multiplier other than 100 would have to be specifically approved by the Commission.

[11] 15 U.S.C. 78f(b)(5) (1982).

[12] In addition, many investment strategies employed by these portfolio managers converge at the calendar quarter. Hence, traditional exchange-type expirations provide a less than perfect hedge for many institutions.

[13] The Commission has approved similar proposals by the American Stock Exchange, Inc. ("Amex") and the Chicago Board Options Exchange, Inc. ("CBOE") to trade QIX options on the Amex's Major Market, Institutional, and Standard & Poor's ("S&P") MidCap Indexes and the CBOE's S&P 100 and 500, and Russell 2000 Indexes. *See* Securities Exchange Act Release Nos. 31844 (February 9, 1993), 58 FR 8796 (Amex); 31800 (February 1, 1993), 58 FR 7274 (CBOE S&P 100 and 500); and 32693 (July 29, 1993), 58 FR 41817 (CBOE Russell 2000).

The Commission also notes that the Exchange's existing rules applicable to stock index options, including among others, strike price interval, bid/ask differential, price continuity, option exercise, sales practice rules, and position and exercise limits will apply to QIX options. In particular, QIX NYAs will be subject to the same 45,000 contract limit under Rule 704(b) as non-QIX options on the NYA, with a 25,000 contract limit for those series having the nearest expiration, and will be aggregated with other NYA option contracts.[14]

The Commission notes that QIX NYAs will be treated like existing NYA options including expiration settlement based on the opening values of the component securities. The Commission continues to believe that basing the settlement of index products on opening, as opposed to closing, prices on Expiration Fridays helps alleviate stock market volatility.[15] First, contra-side interest is easier to attract for the purpose of alleviating order imbalances from unwinding of index-related positions. In contrast to expirations at the close, overnight or weekend risk would be lessened for firms providing contra side interest since these market participants have the rest of the day to liquidate or trade out of their positions. Second, the market would have the remainder of the trading day to adjust to price movements occurring at the opening. Third, with an opening price settlement, traders are able to focus their entire attention to those orders associated with the expiration, and do not have to devote their attention to an ongoing auction market.[16]

The exercise settlement value for quarterly expiration NYA options will be based on the opening prices of the component securities on the business day prior to expiration, *i.e.*, at the opening of business on the first business day following the end of the calendar quarter.[17] The Exchange has proposed to value QIX options at the opening on the first business day after the end of the calendar quarter (rather than the last business day of the calendar quarter) in order to provide the investor with an opportunity to roll out of, or to close out, a position at the end of the calendar quarter. The Commission believes that this ability to roll out or close a position at the end of the calendar quarter could be beneficial to market participants because it will allow institutions to hedge over the full calendar quarter while using opening values for settlement which is consistent with Exchange efforts to reduce market volatility at expirations.

Moreover, QIX NYAs will never expire on an "Expiration Friday" or any other "Expiration Fridays" in March, June, September, and December, thereby diminishing the impact that QIX NYAs could have on the market. Accordingly, the Commission preliminarily believes that QIX NYA options will not compromise the protection of investors or have an adverse market effect. Of course, the Commission expects the NYSE to monitor the actual effect of QIXs once trading commences and take prompt action should any unanticipated adverse market effects develop.

Lastly, based on representations from the NYSE, the Commission believes that the NYSE and the Options Price Reporting Authority ("OPRA") will have adequate systems processing capacity to accommodate the additional options listed in connection with QIX options. Specifically, the Exchange represents that "OPRA should have adequate capacity to handle the volume in End-of-Quarter Options in the NYSE Composite Index."[18]

IV. Solicitation of Comments

Interested persons are invited to submit written data, views and arguments concerning Amendment No. 1 of the proposal to trade QIX options on the NYSE's Utility Index. Persons making written submissions should file six copies thereof with the Secretary, Securities and Exchange Commission, 450 Fifth Street, NW., Washington, DC 20549. Copies of the submission, all subsequent amendments, all written statements with respect to the proposed rule change that are filed with the Commission, and all written communications relating to the proposed rule change between the Commission and any person, other than those that may be withheld from the public in accordance with the provisions of 5 U.S.C. 552, will be available for inspection and copying in the Commission's Public Reference Section, 450 Fifth Street, NW., Washington, DC 20549. Copies of such filing will also be available for inspection and copying at the principal office of the NYSE. All submissions should refer to the file number in the caption above and should be submitted by September 17, 1993.

V. Conclusion

For the reasons discussed above, the Commission finds that the proposal relating to QIX options based on the NYA is consistent with the Act and Section 6 of the Act, in particular.

It Is Therefore Ordered, Pursuant to section 19(b)(2) of the Act,[19] that the proposed rule change (SR–NYSE–93–04) is partially approved relating to QIX options based on the NYA.

For the Commission, by the Division of Market Regulation, pursuant to delegated authority.[20]

Margaret H. McFarland,

Deputy Secretary.

[FR Doc. 93–21203 Filed 8–31–93; 8:45 am]

BILLING CODE 8010–01–M

[14] NYA QIXs are entitled to certain hedge exemptions from position limits under the NYSE's rules. The NYSE's stock index option position limit hedge exemption pilot program enables public customers of a member organization, who have obtained NYSE approval, to hedge qualified long stock portfolios with NYSE-traded broad-based stock index option contracts (either long puts or short calls or a combination or an equivalent position) up to a maximum of 125,000 contracts without regard to the normal position limits. In order to use this broad-based stock index option hedge exemption, a public customer must have a previously-established, NYSE-approved stock portfolio that (a) is net long or short in each component stock or security readily convertible or economically equivalent to common stock and are distributed across at least four industry groups, (b) is comprised of at least 20 stocks, none of which account for more than 15% of the value of the portfolio, and (c) is carried in an account with a member organization, thus ensuring that the NYSE has the ability to conduct adequate surveillance of the hedged position. In addition, the hedge exemption cannot be used for purposes of index arbitrage.

[15] *See* Securities Exchange Act Release No. 30944 (July 21, 1992), 57 FR 33376 ("AM Settlement Approval Order").

[16] In addition, the NYSE's Opening Automated Report Service ("OARS") is available at the opening. OARS accepts pre-opening market orders up to 30,099 shares and executes these orders at the market opening. This enhancement to the NYSE's SuperDot system stores the pre-opening orders, continuously pairs buy and sell orders, and presents order imbalances to specialists up to the time each stock opens for trading. The NYSE believes that the use of its opening procedures reduces the impact of order imbalances on specialists and other market participants.

[17] If a component stock of the NYA does not open, the prior closing price will be used to calculate the exercise settlement value.

[18] *See* letter from David Krell, Vice President, Options & Index Products, NYSE, to Jeffrey Burns, Attorney, Division of Market Regulation, SEC, dated June 2, 1993, incorporating a letter from Joe Corrigan, Executive Director, OPRA, to David Krell, Vice President, Options & Index Products, NYSE, dated June 2, 1993.

[19] 15 U.S.C. § 78s(b)(2) (1982).

[20] 17 CFR 200.30–2(a)(12) (1993).

[Release No. 34–32792; File No. SR–Phlx–93–08]

Self-Regulatory Organizations; Notice of Filing of Proposed Rule Change by the Philadelphia Stock Exchange, Inc. Relating to an Amendment to Floor Procedure Advice F–2 Regarding Time Stamping, Matching and Access to Matched Trade Tickets

August 24, 1993.

Pursuant to Section 19(b)(1) of the Securities Exchange Act of 1934 ("Act"), 15 U.S.C. 78s(b)(1), notice is hereby given that on March 29, 1993, the Philadelphia Stock Exchange, Inc. ("Phlx" or "Exchange") filed with the Securities and Exchange Commission ("Commission" or "SEC") the proposed rule change as described in Items I, II, and III below, which Items have been prepared by the Phlx. The Commission is publishing this notice to solicit comments on the proposed rule change from interested persons.

I. Self-Regulatory Organization's Statement of the Terms of Substance of the Proposed Rule Change

The Phlx, pursuant to Rule 19b–4, proposes to amend Floor Procedure Advice ("Advice") F–2, currently titled "Responsibility for Time Stamping and Matching," to: (1) Rename Advice F–2, "Time Stamping, Matching and Access to Matched Trades;" (2) require matched tickets to be submitted to the specialist post immediately upon execution; (3) require an execution time stamp on the reverse side of a trade ticket; (4) add provisions limiting access to matched trade tickets to participants in the transaction, the specialist in that option and floor officials acting in that capacity; (5) require specialist approval to access matched trade tickets; and (6) require specialists to keep matched tickets for a minimum of three years.

The text of the proposed rule change is available at the Office of the Secretary, Phlx, and the Commission.

II. Self-Regulatory Organization's Statement of the Purpose of, and Statutory Basis for, the Proposed Rule Change

In its filing with the Commission, the Phlx included statements concerning the purpose of, and statutory basis for, the proposed rule change and discussed any comments it received on the proposed rule change. The text of these statements may be examined at the places specified in Item IV below. The Exchange has prepared summaries, set forth in section (A), (B), and (C) below, of the most significant aspects of such statements.

A. Self-Regulatory Organization's Statement of the Purpose of, and Statutory Basis for, the Proposed Rule Change

Phlx Advice F–2 currently spells out the responsibilities pertaining to time stamping and matching floor tickets, imposing this duty upon the largest participant of a trade, or, where there is one buyer and one seller, upon the seller. The Phlx is proposing to separate this Advice into three sections. Section (a) would contain the current time stamping and matching responsibilities as well as two additions. First, trade participants would be required to submit matched tickets to the appropriate person at the specialist post immediately upon effecting a transaction in order to assure that the initiating party agrees with each contra-party's claim as to his or her level of participation as well as to ensure that the terms of the trade are correct. Immediate submissions also lessen the potential for losing a matched ticket before entry into Exchange trade comparison systems. Second, an execution time stamp would be required on the reverse side of the order ticket to distinguish the execution and order entry times for surveillance and audit trail purposes.

Because the Phlx is proposing to add provisions relating to access to matched trades to Advice F–2, the Exchange proposes to rename this Advice "Time Stamping, Matching and Access to Matched Trades." In this regard, the Phlx seeks to limit access to matched trade tickets to those with a legitimate interest: participants, the specialist in that option, and a floor official acting in that capacity. Intra-day, matched trade tickets are kept behind the specialist post on the floor after being inputted into the Exchange's trade comparison systems so that errors can be corrected. Thus, the Phlx is also proposing to require prior specialist permission before looking through these tickets. The Exchange believes that limiting access should reduce the number of instances where floor personnel access trade tickets to discern customers' identities or to ascertain trading patterns. In addition, the Phlx believes that supervising access to trade tickets should provide accountability for persons who access such tickets and help ensure that the trade tickets are returned to the specialist post in a timely manner.

Matched trade tickets serve important surveillance and operations functions. Once a trade has been processed for trade dissemination and clearing, it is then left in the possession of the attendant specialist. Accordingly, the Phlx is proposing to not only limit access to these tickets, but also to require specialists to keep all matched trade tickets in their possession for a period of three years, whether or not the specialist participated or acted as agent in any such trade.

The Phlx notes that Advice F–2 is applicable to both the equity options and foreign currency options floors, and thus, the Phlx proposes to add the notation "OF" after Advice F–2. In addition, the Phlx proposes to increase the fine schedule for this Advice and to apply the new fines on a three-ear cycle, such that repeat violations during the same three-year period would result in escalating fines.[1]

For the above reasons, the Phlx believes that the proposed rule change is consistent with Section 6 of the Act in general, and Section 6(b)(5), in particular, because it is designed to prevent fraudulent acts and practices, promote just and equitable principles of trade, and protect investors and the public interest.

B. Self-Regulatory Organization's Statement on Burden on Competition

The Phlx does not believe that the proposed rule change will impose any inappropriate burden on competition.

C. Self-Regulatory Organization's Statement on Comments on the Proposed Rule Change Received From Members, Participants, or Others

No written comments were either solicited or received.

III. Date of Effectiveness of the Proposed Rule Change and Timing for Commission Action

Within 35 days of the date of publication of this notice in the **Federal Register** or within such longer period (i) as the Commission may designate up to 90 days of such date if it finds such longer period to be appropriate and publishes its reasons for so finding or (ii) as to which the self-regulatory organization consents, the Commission will:

(a) by order approve such proposed rule change, or

(b) institute proceedings to determine whether the proposed rule change should be disapproved.

[1] Under the rolling three-year cycle, if there is no violation of Advice F–2 for three years, the next violation would be treated as a first occurrence. If there is a violation within three years after the most recent violation, the next highest fine will be issued. Thus, a third violation less than three years after a fine was issued for a second occurrence would be treated as a third occurrence, even though more than three years may have elapsed after the first occurrence.

IV. Solicitation of Comments

Interested persons are invited to submit written data, views and arguments concerning the foregoing. Persons making written submissions should file six copies thereof with the Secretary, Securities and Exchange Commission, 450 Fifth Street, NW., Washington, DC 20549. Copies of the submission, all subsequent amendments, all written statements with respect to the proposed rule change that are filed with the Commission, and all written communications relating to the proposed rule change between the Commission and any person, other than those that may be withheld from the public in accordance with the provisions of 5 U.S.C. 552, will be available for inspection and copying in the Commission's Public Reference Section, 450 Fifth Street, NW., Washington, DC. Copies of such filing will also be available for inspection and copying at the principal office of the Phlx. All submissions should refer to the file number in the caption above and should be submitted by September 17, 1993.

For the Commission, by the Division of Market Regulation, pursuant to delegated authority.[2]

Margaret H. McFarland,

Deputy Secretary.

[FR Doc. 93-21202 Filed 8-31-93; 8:45 am]

BILLING CODE 8010-01-M

[2] 17 CFR 200.30-3(a)(12) (1993).

DEPARTMENT OF STATE

[Public Notice 1856]

State Department Performance Review Board Members; At Large Board and OIG Board

In accordance with section 4314 (c)(4) of the Civil Service Reform Act of 1978 (Pub. L. 95-454), the Executive Resources Board of the Department of State has appointed the following individuals to the State Department Performance Review Board (At large Board) register.

Eileen K. Binns, Director of the Office of Administration, Bureau of Management, United States Information Agency

Kathleen J. Charles, Deputy Assistant Secretary for Resource Management, Bureau of Diplomatic Security, Department of State

Robert B. Dickson, Director of the Office of Acquisitions, Bureau of Administration, Department of State

Thomas C. Fingar, Director, Office of Analysis for East Asia and the Pacific, Bureau of Intelligence and Research, Department of State

James G. Hergen, Assistant Legal Adviser, Office of the Legal Adviser, Department of State.

The Inspector General of the Department of State has appointed the following individuals to the State Department Office of the Inspector General Performance Review Board register.

Richard Greene, Acting Chief Financial Officer, Bureau of Finance and Management Policy, Department of State

Katherine A. Brittin, Assistant Inspector General for Inspections, Department of Defense

Charles M. Hall, Assistant Inspector General for Inspections and Resources Management, Department of Commerce.

Dated: August 19, 1993.

Genta Hawkins Holmes,

Director General of the Foreign Service and Director of Personnel.

[FR Doc. 93-21182 Filed 8-31-93; 8:45 am]

BILLING CODE 4710-15-M

DEPARTMENT OF TRANSPORTATION

Federal Highway Administration

Intelligent Vehicle-Highway Society of America; Public Meeting

AGENCY: Federal Highway Administration (FHWA), DOT.

ACTION: Notice of public meeting.

SUMMARY: The Intelligent Vehicle-Highway Society of America (IVHS AMERICA) will hold a meeting of its Coordinating Council on October 6 and 7, 1993. IVHS AMERICA provides a forum for national discussion and recommendations on IVHS activities including programs, research needs, strategic planning, standards, international liaison, and priorities. The charter for the utilization of IVHS AMERICA establishes this organization as an advisory committee under the Federal Advisory Committee Act (FACA), 5 U.S.C. app. 2, when it provides advice or recommendations to DOT officials on IVHS policies and programs. (56 FR 9400, March 6, 1991).

DATES: The Coordinating Council of IVHS AMERICA will meet on October 6 from 8:30 a.m. to 6:30 p.m. p.s.t., and on October 7 from 8 a.m. to 12 p.m. p.s.t. The session is expected to focus on: (1) IVHS architecture and consensus building; (2) IVHS program planning; (3) advanced traveler information systems marketing; (4) technical committee and task force actions to the Council; (5) public/private partnership issues; (6) electronic toll and traffic management; (7) IVHS workshop proposals; (8) initiatives of the U.S. CAR consortium; and (9) draft IVHS AMERICA Management Plan status.

ADDRESSES: San Francisco ANA Hotel (Westin), 50 Third Street, San Francisco, CA 94103, (415) 974-6400.

FOR FURTHER INFORMATION CONTACT: Ms. Susan Lauffer, FHWA, HTV-1, Washington, D.C. 20590, (202) 366-4558, office hours are from 8 a.m. to 4:30 p.m., e.t., Monday through Friday, except for legal holidays; or Mr. Daniel Toohey, IVHS AMERICA, 1776 Massachusetts Avenue, NW., Washington, D.C. 20036, (202) 857-1202.

(23 U.S.C. 315; 49 CFR 1.48)

Issued on: August 24, 1993.

Rodney E. Slater,

Federal Highway Administrator.

[FR Doc. 93-21210 Filed 8-31-93; 8:45 am]

BILLING CODE 4910-22-P

Federal Railroad Administration

[FRA Docket No. RST-93-2]

Union Pacific Railroad Co.; Petition for Waiver of Compliance

In accordance with 49 CFR part 211, notice is hereby given that Union Pacific Railroad Company (UP) has submitted a petition dated May 15 for a waiver of compliance with specific requirements of certain parts of title 49 Code of Federal Regulations for the purpose of improving the cycle frequency of their rail detector cars.

For the purposes of this waiver, the Union Pacific Railroad Company requests relief from certain requirements of the existing Track Safety Standards (49 CFR part 213). Specifically, the Union Pacific Railroad Company requests relief from paragraph (a) of § 213.113 "Defective Rails", which requires a track owner to initiate specified remedial action immediately following the discovery of certain rail defects in track.

The petitioner contends that their fleet of seven computer controlled rail detector cars contain the latest technology available, and, for example, consistently find transverse defects less than 5 percent and bolt hole cracks less than one-quarter inch. The petitioner states that the increase in the number of smaller rail defects found by this technology, some of which may require some form of remedial action under

§ 213.113, has resulted in a steady decline in their daily test mileage and therefore a decline in the cycle frequency of their rail detector cars. The petitioner further contends that the decrease in miles tested has resulted in an increase in service failures.

The petitioner proposes to classify the rail defects found by their rail detector cars into two categories, critical and non-critical. The larger rail defects would be classified as critical and will receive immediate attention as required by § 213.113(a) of the Track Safety Standards. The smaller defects would be classified as non-critical and will receive attention, if required by the Track Safety Standards, within a period of time not to exceed three days following their detection.

The petitioner states that the granting of this waiver will increase their annual test mileage by approximately 25 percent and therefore have a positive impact on safety by improving the cycle frequency of the rail detector cars. The petitioner further contends that this procedure will result in a decreasing number of critical defects found and also a decrease in the number of service failures. The petitioner anticipates there will be no direct cost to either the private sector, consumer, Federal, State and Local governments.

Interested parties are invited to participate in this proceeding by submitting written views, data, or comments. FRA does not anticipate scheduling a public hearing in connection with these proceedings since the facts do not appear to warrant a hearing. If any interested party desires an opportunity for oral hearing, they should notify FRA, in writing, before the end of the comment period and specify the basis of their request.

All communications concerning these proceedings should identify the appropriate docket number and must be submitted in triplicate to the Docket Clerk, Office of Chief Counsel, Federal Railroad Administration, Nassif Building, 400 Seventh Street, SW., Washington, DC 20590. Communications received before October 15, 1993, will be considered by FRA before final action is taken. Comments received after that date will be considered as far as practicable. All written communications concerning these proceedings are available for examination during regular business hours (9 a.m.–5 p.m.) in room 8201, Nassif Building, 400 Seventh Street, SW., Washington, DC 20590.

Issued in Washington, DC, on August 26, 1993.

Phil Olekszyk,

Deputy Associate Administrator for Safety.

[FR Doc. 93–21160 Filed 8–31–93; 8:45 am]

BILLING CODE 4910–06–P

DEPARTMENT OF THE TREASURY

Public Information Collection Requirements Submitted to OMB for Review

August 25, 1993.

The Department of Treasury has made revisions and resubmitted the following public information collection requirement(s) to OMB for review and clearance under the Paperwork Reduction Act of 1980, Public Law 96–511. Copies of the submission(s) may be obtained by calling the Treasury Bureau Clearance Officer listed. Comments regarding this information collection should be addressed to the OMB reviewer listed and to the Treasury Department Clearance Officer, Department of the Treasury, room 3171 Treasury Annex, 1500 Pennsylvania Avenue NW., Washington, DC 20220.

Internal Revenue Service

OMB Number: 1545–0227.
Form Number: IRS Form 6251.
Type of Review: Resubmission.
Title: Alternative Minimum Tax—Individuals.
Description: Form 6251 is used by individuals with adjustments, tax preference items, taxable income above certain exemption amounts, or certain credits. Form 6251 computes the alternative minimum tax which is added to regular tax. The information is needed to ensure the taxpayer is complying with the law.
Respondents: Individuals or households.
Estimated Number of Respondents/Recordkeepers: 243,538.
Estimated Burden Hours Per Respondent/Recordkeeper:
Recordkeeping—2 hours, 17 minutes
Learning about the law or the form—1 hour, 16 minutes
Preparing the form—2 hours, 2 minutes
Copying, assembling, and sending the form to the IRS—20 minutes
Frequency of Response: Annually.
Estimated Total Reporting/Recordkeeping Burden: 1,444,180 hours.
Clearance Officer: Garrick Shear (202) 535–4297, Internal Revenue Service, room 5571, 1111 Constitution Avenue NW., Washington, DC 20224.
OMB Reviewer: Milo Sunderhauf (202) 395–6880, Office of Management and Budget, room 3001, New Executive Office Building, Washington, DC 20503.

Lois K. Holland,

Departmental Reports Management Officer.

[FR Doc. 93–21259 Filed 8–31–93; 8:45 am]

BILLING CODE 4830–01–P

Public Information Collection Requirements Submitted to OMB for Review

August 25, 1993.

The Department of Treasury has submitted the following public information collection requirement(s) to OMB for review and clearance under the Paperwork Reduction Act of 1980, Public Law 96–511. Copies of the submission(s) may be obtained by calling the Treasury Bureau Clearance Officer listed. Comments regarding this information collection should be addressed to the OMB reviewer listed and to the Treasury Department Clearance Officer, Department of the Treasury, Room 3171, Treasury Annex, 1500 Pennsylvania Avenue, NW., Washington, DC 20220.

Special Request: The Department of the Treasury is requesting that the Office of Management and Budget review and approve the information collections listed below by October 8, 1993. All public comments must be received by close of business October 1, 1993.

Departmental Offices/Office of Data Management

OMB Number: 1505–0010.
Form Number: FC–2.
Type of Review: Revision.
Title: Monthly Consolidated Foreign Currency Report of Major Market Participants.
Description: Required by title II of Public Law 93–110 (31 U.S.C. 5315). This is used by the Federal Reserve System in connection with foreign exchange operations conducted for Treasury. Also published as aggregate data in the Treasury Bulletin Quarterly. Affects large firms.
Respondents: Businesses or other for-profit.
Estimated Number of Respondents: 10.
Estimated Burden Hours Per Response: 4 hours.
Frequency of Response: Monthly.
Estimated Total Reporting Burden: 480 hours.

OMB Number: 1505–0012.
Form Number: FC–1.
Type of Review: Revision.
Title: Weekly Consolidated Foreign Currency Report of Major Market Participants.

Description: Required by title II of Public Law 93–110 (31 U.S.C. 5315). This is used by the Federal Reserve System in connection with foreign exchange operations conducted for Treasury. Also published as aggregate data in the Treasury Bulletin Quarterly. Affects large firms.
Respondents: Business or other for-profit.
Estimated Number of Respondents: 25.
Estimated Burden Hours Per Response: 1 hour.
Frequency of Response: Weekly.
Estimated Total Reporting Burden: 1,300 hours.
OMB Number: 1505–0014.
Form Number: FC–3.
Type of Review: Revision.
Title: Quarterly Consolidated Foreign Currency Report.
Description: Required by title II of Public Law 93–110 (31 U.S.C. 5315). This is used by the Federal Reserve System in connection with foreign exchange operations conducted for Treasury. Also published as aggregate data in the Treasury Bulletin Quarterly. Affects large firms.
Respondents: Businesses or other for-profit.
Estimated Number of Respondents: 50.
Estimated Burden Hours Per Response: 8 hours.
Frequency of Response: Quarterly.
Estimated Total Reporting Burden: 1,600 hours.
Clearance Officer: Lois K. Holland (202) 622–1563, Departmental Offices, room 3171, Treasury Annex, 1500 Pennsylvania Avenue NW., Washington, DC 20220.
OMB Reviewer: Milo Sunderhauf (202) 395–6880, Office of Management and Budget, room 3001, New Executive Office Building, Washington, DC 20503.

Lois K. Holland,
Departmental Reports Management Officer.
[FR Doc. 93–21260 Filed 8–31–93; 8:45 am]
BILLING CODE 4810–25–P

Public Information Collection Requirements Submitted to OMB for Review

August 23, 1993.

The Department of Treasury has submitted the following public information collection requirement(s) to OMB for review and clearance under the Paperwork Reduction Act of 1980, Public Law 96–511. Copies of the submission(s) may be obtained by calling the Treasury Bureau Clearance Officer listed. Comments regarding this information collection should be addressed to the OMB reviewer listed and to the Treasury Department Clearance Officer, Department of the Treasury, room 3171 Treasury Annex, 1500 Pennsylvania Avenue NW., Washington, DC 20220.

Internal Revenue Service

OMB Number: New.
Form Number: IRS Form 9467.
Type of Review: New collection.
Title: Electronic Funds Transfer Refund Authorization.
Description: The authorization of disclosure to a taxpayer's financial institution of confidential tax return information is necessary to process the taxpayer's direct deposit refund request.
Respondents: Individuals or households, Businesses or other for-profit.
Estimated Number of Respondents: 250,000.
Estimated Burden Hours Per Respondent: 10 minutes.
Frequency of Response: Annually.
Estimated Total Reporting Burden: 40,000 hours.
Clearance Officer: Garrick Shear (202) 622–3869, Internal Revenue Service, room 5571, 1111 Constitution Avenue NW., Washington, DC 20224.
OMB Reviewer: Milo Sunderhauf (202) 395–6880, Office of Management and Budget, room 3001, New Executive Office Building, Washington, DC 20503.

Lois K. Holland,
Departmental Reports Management Officer.
[FR Doc. 93–21261 Filed 8–31–93; 8:45 am]
BILLING CODE 4830–01–P

Public Information Collection Requirements Submitted to OMB for Review

August 24, 1993.

The Department of Treasury has submitted the following public information collection requirement(s) to OMB for review and clearance under the Paperwork Reduction Act of 1980, Public Law 96–511. Copies of the submission(s) may be obtained by calling the Treasury Bureau Clearance Officer listed. Comments regarding this information collection should be addressed to the OMB reviewer listed and to the Treasury Department Clearance Officer, Department of the Treasury, room 3171 Treasury Annex, 1500 Pennsylvania Avenue, NW., Washington, DC 20220.

Internal Revenue Service

OMB Number: 1545–1377.
Form Number: IRS Form SWR 2826.
Type of Review: Reinstatement.
Title: Forms Distribution Improvement Survey.
Description: The proposed telephone study would be conducted on a national basis and would question individual taxpayers who call the IRS distribution centers to order tax forms, instructions, and/or publications. This study will attempt to identify taxpayers' actions and habits when filling out their tax returns. Additionally, taxpayers will be questioned to determine if they are willing to provide their social security number when they call to order tax forms. The information collected by this proposed study may allow the IRS to make changes to the forms distribution process that would (1) reduce the number of taxpayers having to call the IRS to order additional copies of items and (2) provide taxpayers with better service.
Respondents: Individuals or households.
Estimated Number of Respondents: 2,136.
Estimated Burden Hours Per Respondent: 3 minutes.
Frequency of Response: On occasion.
Estimated Total Reporting Burden: 102 hours.
Clearance Officer: Garrick Shear (202) 622–3869, Internal Revenue Service, room 5571, 1111 Constitution Avenue, NW., Washington, DC 20224.
OMB Reviewer: Milo Sunderhauf (202) 395–6880, Office of Management and Budget, room 3001, New Executive Office Building, Washington, DC 20503.

Lois K. Holland,
Departmental Reports Management Officer
[FR Doc. 93–21262 Filed 8–31–93; 8:45 am]
BILLING CODE 4830–01–P

Public Information Collection Requirements Submitted to OMB for Review

August 23, 1993.

The Department of Treasury has submitted the following public information collection requirement(s) to OBM for review and clearance under the Paperwork Reduction Act of 1980, Public Law 96–511. Copies of the submission(s) may be obtained by calling the Treasury Bureau Clearance Officer listed. Comments regarding this information collection should be addressed to the OMB reviewer listed and to the Treasury Department Clearance Officer, Department of the Treasury, room 3171 Treasury Annex, 1500 Pennsylvania Avenue, NW., Washington, DC 20220.

Bureau of Alcohol, Tobacco and Firearms

OMB Number: 1512–0198.

Form Numbers: ATF REC 5110/03–ATF F 5110.28.

Type of Review: Reinstatement.

Title: Distilled Spirits Plant (DSP) Processing Records and Report.

Description: The information collected is necessary to account for and verify the processing of distilled spirits in bond. It is used to audit plant operations, monitor industry activities for the efficient allocation of personnel resources and the compilation of statistics.

Respondents: Businesses or other for-profit, Small businesses or organizations.

Estimated Number of Respondents/Recordkeepers: 136.

Estimated Burden Hours Per Respondent/Recordkeeper: 2 hours.

Frequency of Response: Monthly.

Estimated Total Reporting/Recordkeeping Burden: 3,944 hours.

Clearance Officer: Robert N. Hogarth, (202) 927–8930, Bureau of Alcohol, Tobacco and Firearms, room 3200, 650 Massachusetts Avenue NW., Washington, DC 20226.

OMB Reviewer: Milo Sunderhauf, (202) 395–6880, Office of Management and Budget, room 3001, New Executive Office Building, Washington, DC 20503.

Lois K. Holland,

Departmental Reports Management Officer.

[FR Doc. 93–21263 Filed 8–31–93; 8:45 am]

BILLING CODE 4810–31–P

Customs Service

Denial of Trade Name: "Dovex Incorporated"

ACTION: Denial of Trade Name "Dovex Incorporated".

SUMMARY: On April 9, 1993, a notice of application was published in the **Federal Register** (58 FR 18446). The notice advised that the trade name was used by Dovex Incorporated, in connection with cookware.

Following the publication of the notice of recordation, Customs was made aware that a prior user of the trade name who also has U.S. trademark registrations for "DOVEX," and "DOVEX WITH DESIGN," (U.S. Trademark Nos. 1,318,475 and 1,522,824) was recorded in this Office on June 16, 1993. Since Customs recognizes the existence of the trademarks and the prior use of the trade name Dovex Corp., the application of Dovex Inc., is hereby denied.

FOR FURTHER INFORMATION CONTACT: Delois P. Cooper, Intellectual Property Rights Branch, 1301 Constitution Avenue, NW., (Franklin Court), Washington, DC 20229 (202–482–6960).

Dated: August 25, 1993.

Timothy P. Trainer,

Acting Chief, Intellectual Property Rights Branch.

[FR Doc. 93–21159 Filed 8–31–93; 8:45 am]

BILLING CODE 4820–02–M

Internal Revenue Service

Individuals With Disabilities; Accomodations Evaluation

AGENCY: Internal Revenue Service (IRS), Treasury.

ACTION: Notice.

SUMMARY: Notice is hereby given that the IRS is currently conducting an evaluation of its facilities, programs, policies and practices. A transition plan will be developed to make any needed improvements to accommodate individuals with disabilities and to meet the requirements of section 504 of the Rehabilitation Act of 1973, as amended.

DATES: This action is effective as of August 30, 1993, and expires September 17, 1993.

ADDRESSES: Interested persons are invited to mail comments to: Internal Revenue Service, Attn: C:EO:A, Room 2326/IR, 1111 Constitution Avenue, NW., Washington, DC 20224.

FOR FURTHER INFORMATION CONTACT: Patricia Mance at the address given above; telephone (202) 622–6783 (not a toll-free telephone number). Individuals who use a telecommunications device for the deaf (TDD) may call the Federal Information Relay Service at 1–800–877–8339.

SUPPLEMENTARY INFORMATION: Department of Treasury Regulation 31 CFR part 17, Enforcement of Nondiscrimination on the Basis of Handicap in Treasury Programs, directs that the Department conduct its own activities in ways that are nondiscriminatory to people with disabilities. The Internal Revenue Service is providing an opportunity to interested persons, including persons and organizations representing disabled citizens, to participate by submitting comments. A separate notice will be given for review of the transition plan.

Dorothy Shaw,

Executive Assistant (Equal Opportunity).

[FR Doc. 93–21241 Filed 8–31–93; 8:45 am]

BILLING CODE 4830–01–U

federal register

Wednesday
September 1, 1993

Part II

Department of Health and Human Services

Health Care Financing Administration

42 CFR Parts 412 and 413
Medicare Program; Changes to the Hospital Inpatient Prospective Payment Systems and Fiscal Year 1994 Rates; Final Rule

DEPARTMENT OF HEALTH AND HUMAN SERVICES

Health Care Financing Administration

42 CFR Parts 412 and 413

[BPD-771-FC]

RIN 0938-AG23

Medicare Program; Changes to the Hospital Inpatient Prospective Payment Systems and Fiscal Year 1994 Rates

AGENCY: Health Care Financing Administration (HCFA), HHS.

ACTION: Final rule with comment period.

SUMMARY: We are revising the Medicare hospital inpatient prospective payment systems for operating costs and capital-related costs to implement necessary changes arising from our continuing experience with the system. In addition, in the addendum to this final rule with comment period, we are describing changes in the amounts and factors necessary to determine prospective payment rates for Medicare hospital inpatient services for operating costs and capital-related costs. These changes are applicable to discharges occurring on or after October 1, 1993, unless the statute provides otherwise. We are also setting forth rate-of-increase limits for hospitals and hospital units excluded from the prospective payment systems.

Finally, we are implementing certain changes in the hospital inpatient prospective payment systems resulting from the enactment of the Omnibus Budget Reconciliation Act of 1993 on August 10, 1993.

DATES: *Effective date:* This final rule with comment period is effective on October 1, 1993.

Comments: Comments on changes to the May 26, 1993 proposed rule resulting from provisions of the Omnibus Budget Reconciliation Act of 1993 will be considered if we receive them at the appropriate address, as provided below, no later than November 1, 1993. We will not consider comments concerning provisions that remain unchanged from the May 26, 1993 proposed rule or on provisions that were changed based on public comments.

ADDRESSES: Mail written comments (an original and 3 copies) to the following address: Health Care Financing Administration, Department of Health and Human Services, Attention: BPD-771-FC, P.O. Box 7517, Baltimore, MD 21207-0517.

If you prefer, you may deliver your written comments (an original and 3 copies) to one of the following addresses:

Room 309-G, Hubert H. Humphrey Building, 200 Independence Avenue, SW., Washington, DC 20201, or

Room 132, East High Rise Building, 6325 Security Boulevard, Baltimore, MD 21207.

Because of staffing and resource limitations, we cannot accept comments by facsimile (FAX) transmission. In commenting, please refer to file code BPD-771-FC. Comments received timely will be available for public inspection as they are received, generally beginning approximately 3 weeks after publication of a document, in room 309-G of the Department's offices at 200 Independence Avenue, SW., Washington, DC, on Monday through Friday of each week from 8:30 a.m. to 5 p.m. (phone: (202) 690-7890).

Copies: To order copies of the **Federal Register** containing this document, send your request to: New Orders, Superintendent of Documents, P.O. Box 371954, Pittsburgh, PA 15250-7954. Specify the date of the issue requested and enclose a check or money order payable to the Superintendent of Documents, or enclose your Visa or Master Card number and expiration date. Credit card orders can also be placed by calling the order desk at (202) 783-3238 or by faxing to (202) 275-6802. The cost for each copy is $4.50. As an alternative, you can view and photocopy the **Federal Register** document at most libraries designated as Federal Depository Libraries and at many other public and academic libraries throughout the country that receive the **Federal Register**.

FOR FURTHER INFORMATION CONTACT: Barbara Wynn, (410) 966-4529.

SUPPLEMENTARY INFORMATION:

I. Background

A. Summary

Under section 1886(d) of the Social Security Act (the Act), a system of payment for the operating costs of acute hospital inpatient stays under Medicare Part A (Hospital Insurance) based on prospectively-set rates was established effective with hospital cost reporting periods beginning on or after October 1, 1983. Under this system, Medicare payment for hospital inpatient operating costs is made at a predetermined, specific rate for each hospital discharge. All discharges are classified according to a list of diagnosis-related groups (DRGs). The regulations governing the hospital inpatient prospective payment system are located in 42 CFR part 412. On September 1, 1992, we published a final rule (57 FR 39746) to implement changes to the prospective payment system for hospital operating costs for Federal fiscal year (FY) 1993.

For cost reporting periods beginning before October 1, 1991, hospital inpatient operating costs were the only costs covered under the prospective payment system. Payment for capital-related costs had been made on a reasonable cost basis because, under sections 1886(a)(4) and (d)(1)(A) of the Act, those costs had been specifically excluded from the definition of inpatient operating costs. However, section 4006(b) of the Omnibus Budget Reconciliation Act of 1987 (Pub. L. 100-203) revised section 1886(g)(1) of the Act to require that, for hospitals paid under the prospective payment system for operating costs, capital-related costs would also be paid under a prospective payment system effective with cost reporting periods beginning on or after October 1, 1991. As required by section 1886(g) of the Act, we replaced the reasonable cost-based payment methodology with a prospective payment methodology for hospital inpatient capital-related costs. Under the new methodology, effective for cost reporting periods beginning on or after October 1, 1991, a predetermined payment amount per discharge is made for Medicare inpatient capital-related costs. (See the August 30, 1991 final rule (56 FR 43358) for a complete discussion of the prospective payment system for hospital inpatient capital-related costs.)

B. Summary of the Provisions of the May 26, 1993 Proposed Rule

On May 26, 1993, we published a proposed rule in the **Federal Register** (58 FR 30222) to amend the prospective payment systems for operating costs and capital-related costs as follows:

- We proposed changes for FY 1994 DRG classifications and weighing factors as required by section 1886(d)(4)(C) of the Act. This section requires that we adjust the DRG classifications and relative weights at least annually.
- We proposed a revised wage index for discharges occurring on or after October 1, 1993, and, in particular, the implementation of new wage data and revised labor market areas based on the new Metropolitan Statistical Area (MSA) definitions established by the Office of Management and Budget on December 28, 1992. Specific issues addressed included revised labor market areas, updating the wage index data, revisions to the methodology for computing the wage index, options for phasing in the new wage index, and future refinements to labor market areas.

• We discussed several provisions of the regulations in 42 CFR parts 412 and 413 concerning the prospective payment system for operating costs and set forth certain proposed changes concerning:
—Outlier payments for transfer cases.
—Elimination of the regional floor.
—Rural referral centers.
—Hospitals in areas redesignated as rural.
—Disproportionate share adjustment.
—Direct graduate medical education payment.

• We set forth a proposed change to the prospective payment system for capital-related costs concerning the calculation of the disproportionate share adjustment for urban hospitals with more than 100 beds.

• We discussed proposed changes to the regulations at 42 CFR parts 412 and 413 for hospitals and hospital units excluded under the prospective payment system. The proposed changes concerned the following:
—Limitation of exclusions for distinct-part hospital units.
—Technical changes regarding the rate-of-increase ceiling on operating costs.
—Other technical changes.

• In the addendum to the proposed rule, we set forth proposed changes to the amounts and factors for determining the FY 1994 prospective payment rates for operating costs and capital-related costs. We also proposed new update factors for determining the rate-of-increase limits for cost reporting periods beginning in FY 1994 for hospitals and hospital units excluded from the prospective payment system.

• In appendix A of the proposed rule, we set forth an analysis of the impact that the changes described in the proposed rule would have on affected entities.

• In appendix B of the proposed rule, we set forth the technical appendix on the proposed FY 1994 capital acquisition model and budget neutrality adjustment.

• In appendix C of the proposed rule, we set forth our initial estimate of a recommended update factor for FY 1994 for both prospective payment hospitals and hospitals excluded from the prospective payment system, as required by section 1886(e)(3)(B) of the Act.

• In appendix D of the proposed rule, we provided our recommendation of the appropriate percentage changes for FY 1994, as required by sections 1886 (e)(4) and (e)(5) of the Act, for the following:
—Large urban, other urban, and rural average standardized amounts (and hospital-specific rates applicable to sole community hospitals) for hospital inpatient services paid for under the prospective payment system for operating costs.
—Target rate-of-increase limits to the allowable operating costs of hospital inpatient services furnished by hospitals and hospital units excluded from the prospective payment system.

• In appendix E of the proposed rule, we set forth a preliminary framework for developing the annual update factor for hospital inpatient capital-related costs.

In the May 26, 1993 proposed rule, we also discussed in detail the March 1, 1993 recommendations made by the Prospective Payment Assessment Commission (ProPAC). ProPAC is directed by the provisions of section 1886(e)(2)(A) of the Act to make recommendations on the appropriate percentage change factor to be used in updating the average standardized amounts beginning with FY 1986 and thereafter. In addition, section 1886(e)(2)(B) of the Act directs ProPAC to make recommendations regarding changes in each of the Medicare payment policies under which payments to an institution are prospectively determined. In particular, the recommendations relating to the hospital inpatient prospective payment systems are to include recommendations concerning the number of DRGs used to classify patients, adjustments to the DRGs to reflect severity of illness, and changes in the methods under which hospitals are paid for capital-related costs. Under section 1886(e)(3)(A) of the Act, the recommendations required of ProPAC under sections 1886(e)(2) (A) and (B) of the Act are to be reported to Congress not later than March 1 of each year.

We printed ProPAC's March 1, 1993 report, which includes its recommendations, as appendix G of the proposed rule. The recommendations, and the actions we proposed to take with regard to them (when an action is recommended), were discussed in detail in the appropriate sections of the preamble, the addendum, or the appendixes of the proposed rule.

Set forth below in sections II, III, IV, V, VI, VII, and VIII of this preamble, the addendum to this final rule, and the appendices, are detailed discussions of the May 26, 1993 proposed rule, the public comments received in response to the proposed rule, and the responses to those comments as well as any changes we are making.

We note that several of ProPac's recommendations concerned potential refinements to the current hospital labor market areas. Specifically, ProPAC recommended that the Secretary substantially revise the hospital wage index by developing hospital-specific labor market areas. One configuration would be to establish each hospital's labor market area based on its 10 nearest neighbors within a 50 air-mile radius. We believed that careful analysis of ProPAC's recommendation was necessary before we considered proposing such a significant change. Although we did not propose to implement ProPAC's recommendation in FY 1994, we sought public comment on the proposal. To facilitate the review and comment process, we published hospital-specific wage index values based on ProPAC's recommendation in appendix F of the proposed rule. Comments on ProPac's proposal were due on August 31, 1993, and we intend to discuss the comments and respond to them in a future rulemaking document.

C. Public Comments Received in Response to the May 26, 1993 Proposed Rule

A total of 171 items of correspondence containing comments on the May 26, 1993 proposed rule were received timely. The main areas of concern addressed by commenters were the following:

• Implementation of the FY 1994 wage index and the overall accuracy of the wage data.

• The amounts of the FY 1993 outlier payments.

• The rate of increase in the market basket and the update to the standardized amounts.

• The amount of the Federal capital rate.

• Revisions to rate-of-increase limits for hospitals and hospital units excluded from the prospective payment system.

• Requests for changes in DRG classification and relative weights.

D. Relevant Provisions of the Omnibus Budget Reconciliation Act of 1993

On August 10, 1993, the Omnibus Budget Reconciliation Act of 1993 (Pub. L. 103–66) was enacted. The provisions of sections 13501, 13502, 13505, 13506, and 13563 of Public Law 103–66 made the following changes that affect Medicare payments for hospital inpatient services under the prospective payment system:

• The update factor for the standardized amounts for FY 1994 is the market basket rate of increase minus 2.5 percentage points for hospitals located in urban areas and the market basket rate of increase minus 1.0 percentage point for hospitals located in rural areas. The applicable percentage increases in

the update factors for FYs 1995 through FY 1998 are also established.

• Beginning in FY 1994, updates to the hospital-specific rates for sole community hospitals (SCHs) and Medicare-dependent, small rural hospitals (MDHs) will be made on a Federal fiscal year basis, rather than on a cost reporting period basis. The FY 1994 update will be computed taking into account the portion of the 12-month cost reporting period beginning during FY 1993 that occurred during FY 1994. In addition, the update for SCHs and MDHs is the market basket rate of increase minus 2.3 percentage points for FY 1994. The applicable percentage increase for FY 1995 and the methodology for computing the increase in FY 1996 and subsequent fiscal years also are established.

• The unadjusted standard Federal rate for capital payments to prospective payment hospitals is reduced by 7.4 percent for FY 1994. We note that this provision does not supersede the provision of section 1886(g) of the Act that requires that aggregate payments equal 10 percent less than the amount that would have been paid to hospitals under reasonable cost reimbursement.

• Hospitals in urban areas with wage indexes below the wage index for rural areas in the State and hospitals in a State comprised of a single urban area are not subject to further decreases in their wage indexes as a result of reclassification of other hospitals. Under the statute, this provision is effective retroactive to October 1, 1991.

• Hospitals classified as regional referral centers on September 30, 1992, will maintain that classification for cost reporting periods beginning in FYs 1993 and 1994, unless the area in which the hospital is located is redesignated as a Metropolitan Statistical Area by the Office of Management and Budget for such a fiscal year.

• The special payment provisions for Medicare-dependent, small rural hospitals (MDHs) are extended through discharges occurring before October 1, 1994. However, after a hospital's first three 12-month cost reporting periods as an MDH, there is a revision in the payment methodology.

• Hospitals that lost their classification as a regional referral center for cost reporting periods beginning during FY 1993 are entitled to receive a lump-sum payment equal to the difference between the hospital's actual aggregate payment during that period and the aggregate payment that the hospital would have received if the hospital had been classified as a regional referral center. Hospitals that lost their classification as MDHs for cost reporting periods beginning during FYs 1992 or 1993 are entitled to receive a similar lump-sum payment.

• Hospitals that fail to qualify as regional referral centers or MDHs as a result of a decision by the Medicare Geographic Classification Review Board to reclassify the hospital as being located in an urban area for either FY 1993 or FY 1994 may decline such reclassification.

• The regional floor provision, which allows hospitals in census regions for which regional standardized amounts exceed the national standardized amount to be paid based on 15 percent of the regional amount and 85 percent of the national amount, has been extended through FY 1996.

• For FYs 1994 through 1997, the applicable rate-of-increase percentages (the market basket percentage increase) for hospitals that are excluded from the prospective payment system are reduced by the lesser of one percentage point or the percentage point difference between 10 percent and the percentage by which the hospital's allowable operating costs of inpatient hospital services for cost reporting periods beginning in FY 1990 exceeds the hospital's target amount. Hospitals or distinct part hospital units with FY 1990 operating costs exceeding target amounts by 10 percent or more receive the market basket percentage increase.

• Payments to hospitals for the cost of administering blood clotting factor to Medicare beneficiaries who have hemophilia are reinstated retroactively to discharges occurring on or after December 19, 1991, and extended through discharges occurring before October 1, 1994.

• Effective with discharges occurring on or after August 10, 1993, the time spent by graduate medical residents providing services at a community health center under the ownership and control of a hospital are included in the hospital's resident count for purposes of computing indirect medical education payments.

• For cost reporting periods beginning in FYs 1994 and 1995, direct graduate medical education payments are not updated, except for payments for residents in primary care, and obstetrics and gynecology.

• Effective August 10, 1993, a resident in an approved preventive care training program may be counted as a full-time resident for up to 2 additional years beyond the initial residency period.

Each of these provisions and the changes to the regulations necessary to implement these provisions are described in greater detail in section IV of this preamble.

II. Changes to DRG Classifications and Relative Weights

A. Background

Under the prospective payment system, we pay for inpatient hospital services on the basis of a rate per discharge that varies by the DRG to which a beneficiary's stay is assigned. The formula used to calculate payment for a specific case takes an individual hospital's payment rate per case and multiplies it by the weight of the DRG to which the case is assigned. Each DRG weight represents the average resources required to care for cases in that particular DRG relative to the average resources used to treat cases in other DRGs.

Congress recognized that it would be necessary to recalculate the DRG relative weights periodically to account for changes in resource consumption. Accordingly, section 1886(d)(4)(C) of the Act requires that the Secretary adjust the DRG classifications and relative weights annually. These adjustments are made to reflect changes in treatment patterns, technology, and any other factors that may change the relative use of hospital resources. The changes to the DRG classification system and the recalibration of the DRG weights for discharges occurring on or after October 1, 1993 are discussed below.

B. DRG Reclassification

1. General

Cases are classified into DRGs for payment under the prospective payment system based on the principal diagnosis, up to eight additional diagnoses, and up to six procedures performed during the stay, as well as age, sex, and discharge status of the patient. The diagnosis and procedure information is reported by the hospital using codes from the International Classification of Diseases, Ninth Edition, Clinical Modification (ICD–9–CM). The intermediary enters the information into its claims system and subjects it to a series of automated screens called the Medicare Code Editor (MCE). These screens are designed to identify cases that require further review before classification into a DRG can be accomplished.

After screening through the MCE and any further development of the claims, cases are classified by the GROUPER software program into the appropriate DRG. The GROUPER program was developed as a means of classifying each case into a DRG on the basis of the diagnosis and procedure codes and

demographic information (that is, sex, age, and discharge status). It is used both to classify past cases in order to measure relative hospital resource consumption to establish the DRG weights and to classify current cases for purposes of determining payment.

Currently, cases are assigned to one of 489 DRGs in 25 major diagnostic categories (MDCs). Most MDCs are based on a particular organ system of the body (for example, MDC 6, Diseases and Disorders of the Digestive System); however, some MDCs are not constructed on this basis since they involve multiple organ systems (for example, MDC 22, Burns).

In general, principal diagnosis determines MDC assignment. However, there are four DRGs to which cases are assigned on the basis of procedure codes rather than first assigning them to an MDC based on the principal diagnosis. These are the DRGs for liver and bone marrow transplant (DRGs 480 and 481, respectively) and the two DRGs for tracheostomies (DRGs 482 and 483). Cases are assigned to these DRGs before classification to an MDC.

Within most MDCs, cases are then divided into surgical DRGs (based on a surgical hierarchy that orders individual procedures or groups of procedures by resource intensity) and medical DRGs. Medical DRGs generally are differentiated on the basis of diagnosis and age. Some surgical and medical DRGs are further differentiated based on the presence or absence of complications or comorbidities (hereafter CC).

Generally, GROUPER does not consider other procedures; that is, nonsurgical procedures or minor surgical procedures generally not performed in an operating room are not listed as operating room (OR) procedures in the GROUPER decision tables. However, there are a few non-OR procedures that do affect DRG assignment for certain principal diagnoses, such as extracorporeal shock wave lithotripsy for patients with a principal diagnosis of urinary stones.

We proposed to make several changes to the DRG classification system for FY 1994. These proposed changes and the comments we received concerning them, as well as our responses to those comments and the final DRG changes are set forth below.

2. Major Head and Neck Procedures (DRG 49)

Cochlear implants were first covered by Medicare in 1986 and, in the September 3, 1986 prospective payment final rule (51 FR 31488), were assigned to DRG 49 (Major Head and Neck Procedures), the highest-weighted surgical DRG in MDC 3 (Diseases and Disorders of Ear, Nose, Mouth and Throat). Although cochlear implant procedures were not clinically similar to the procedures already assigned to DRG 49, it was the most appropriate surgical DRG within MDC 3 in terms of resource use. This original assignment was made on an interim basis, and we stated that we would continue to analyze these cases to determine if the assignment to DRG 49 and the resulting payment were appropriate and equitable.

Since the publication of the September 3, 1986 final rule, we have received complaints that the weight of DRG 49 is too low and does not adequately reflect the resources necessary for cochlear implants. We have conducted additional analyses of the cochlear procedures in several subsequent years, including in the prospective payment final rule published on September 1, 1992 (57 FR 39755). At that time, we analyzed the FY 1991 Medicare Provider Analysis and Review File (MedPAR) data for DRG 49 to determine the current charges and length of stay for cochlear implants and the other procedures assigned to that DRG. The ICD–9–CM procedure codes we used to identify these cases are 20.96 (Implantation or replacement of cochlear prosthetic device, NOS), 20.97 (Implantation or replacement of cochlear prosthetic device, single channel), and 20.98 (Implantation or replacement of cochlear prosthetic device, multiple channel). We found no cases coded with 20.97 and, in fact, these devices have been replaced by the multiple channel devices and are no longer available.

We found that, although the cochlear implant cases incurred higher charges than the average DRG 49 case, the 100 cases included in the MedPAR data were distributed across 53 hospitals with no hospital performing more than eight procedures. Therefore, we concluded that the volume was not sufficient to justify a DRG modification. However, since payment for cochlear implant patients had been an issue for several years, we stated that we would continue to evaluate the resource consumption related to cochlear implant cases and their impact on hospitals, as well as investigate and consider other options.

One option that commenters suggested last year was that we reassign the less costly cases in DRG 49 to DRG 63 (Other Ear, Nose, Mouth and Throat OR Procedures). Although we stated that we did not believe this would be an appropriate assignment for any of the cases in DRG 49 (57 FR 39756), we did believe that it was appropriate to review the procedures assigned to DRG 49 to determine if they are all appropriately placed in terms of resource consumption. It would be possible for one or two high-volume procedures with relatively low average charges to lower the weight for DRG 49. Therefore, using the FY 1992 MedPAR data, updated through December 1992, we reviewed the charge data for the procedures assigned to DRG 49 prior to publication of the proposed rule.

Of the 14 procedures other than cochlear implants assigned to DRG 49, only one procedure with more than 10 cases had an average standardized charge that was significantly lower than the average standardized charge for the DRG: Partial glossectomy (procedure code 25.2). The average charge for this procedure was $7,213 and the average charge for DRG 49 overall was $13,393. In addition, partial glossectomies are the second highest volume of cases in DRG 49 (579 out of 2,839 cases). If procedure code 25.2 were to be removed from DRG 49, the average standardized charge for the remaining cases would increase to $13,950.

Based on the FY 1992 MedPAR data updated through December 1992, there were 87 cochlear implant discharges, with an average standardized charge of $20,289. In the proposed rule, we also noted that, of the other procedures classified in DRG 49 with more than 10 cases, two incurred higher average charges than the cochlear procedures. Total mandibulectomy with synchronous reconstruction (procedure code 76.41) had the highest average charge ($33,473), and the average charge for bilateral radical neck dissection (procedure code 40.42) was $27,439.

Based on this analysis, we proposed to remove partial glossectomies from DRG 49 and place this procedure in DRGs 168 and 169 (Mouth Procedures).[1] The procedures assigned to these DRGs are clinically similar to partial glossectomies as well as comparable in terms of resource use.

Comment: We received only one comment on the proposed change to DRG 49, which was from the manufacturer of the cochlear implant device. The commenter acknowledged the action taken in the proposed rule toward improving the weight of DRG 49 and expressed appreciation for the resources HCFA has applied to their

[1] A single title combined with two DRG numbers is used to signify pairs. Generally, the first DRG is for cases with CC and the second is for cases without CC. If a third number is included, it represents cases of patients who are age 0–17. Occasionally, a pair of DRGs are split on age > 17 and age 0–17.

concern regarding payment for cochlear implants. However, the commenter remains concerned that Medicare beneficiaries will continue to face reduced access to cochlear implant technology until the implants are assigned to a DRG with a substantially higher weight. The commenter repeats two recommendations it has made in previous years: Move cochlear implants to DRG 1 (Craniotomy Age >17 except for Trauma) or remove the externally worn components of the device from the DRG hospital inpatient payment and allow separate Part B payment because these services are provided on an outpatient basis after discharge. In addition, consistent with the proposed changes, the commenter suggested that other low-resource use procedures be moved out of DRG 49.

The commenter concluded with reference to its continued belief that the charges submitted by some hospitals are too low to reflect the actual resource use of the procedure and the inpatient stay. The commenter states that charges below $17,000, the minimum charge to be expected for a cochlear implant, are still occurring for a high percentage of the hospital bills. While the commenter acknowledges the Medicare claims edit that was put in place in May 1991 to identify these cases, the commenter believes the edit is ineffective. The commenter continues to believe that bills with charges of less than $17,000 are either incorrectly charging for the implant device or are using the cochlear implant codes for procedures that are not cochlear implants. In the latter case, HCFA is paying for incorrectly billed procedures, resulting in artificially lower average charges for cochlear implants and an adverse effect on the weight for DRG 49.

Response: In the prospective payment final rule for FY 1993, published September 1, 1992, we noted our objections to the suggestion that cochlear implant procedures be moved to DRG 1 (57 FR 39755). In that document, we stated that the diagnosis code associated with the cochlear cases (code 389, Hearing loss) is not clinically coherent with the diagnosis codes assigned to MDC 1 (Diseases and Disorders of the Nervous System). In addition, the average standardized charge for DRG 1 is $24,086, which is $5,093 higher than the average standardized charge for cochlear implants ($18,993 based on the 89 cases in FY 1992 MedPAR file updated through June 1993).

The suggestion that the external components of implant devices be "unbundled" from other inpatient supplies and services and billed under Medicare Part B was also addressed in the September 1, 1992 final rule. As we stated in that rule, sections 1862(a)(14) and 1833(d) of the Act require that all services furnished to a Medicare beneficiary as part of a hospital inpatient stay are services covered under Medicare Part A and may not be paid for under Part B. As the external components are an integral part of the cochlear implant device, they are considered to be part of the services connected with the inpatient stay. Our position on this issue remains unchanged.

As to the assertion that charges by the hospital for less than $17,000 must represent billing errors, we note that, as stated in the September 1, 1992 final rule (57 FR 39755), instructions were sent to fiscal intermediaries to return to the hospital any claims where total charges for cochlear implants were less than $17,000. As part of our evaluation of cochlear implants for the proposed rule, we verified compliance with these instructions and confirmed that the intermediary is, in fact, returning to the hospital those claims with charges less than $17,000. Thus, the claims included in our MedPAR analysis have been validated as accurate by the hospital. Therefore, although the manufacturer asserts that the lower charges are incorrect or the hospital is billing for procedures that are not cochlear implants, we are assured that hospitals have been given the opportunity to verify their submitted charges, and, therefore, accept these charges as reliable.

With regard to this issue, we note that the charges we use in our analysis of DRG classification changes are "standardized" charges; that is, the charges submitted on the hospital inpatient bill have been standardized in accordance with the provisions of sections 1886(d)(2)(C) and (d)(9)(B)(ii) of the Act to remove the effects of certain sources of variation in costs among hospitals. These include case mix, differences in area wage levels, cost of living adjustments for Alaska and Hawaii, indirect medical education adjustments, and payments to hospitals serving a disproportionate share of low-income patients. When the effect of standardization is removed, and we review the nonstandardized charges as submitted by the hospital, the number of cochlear implant claims reporting total charges under $17,000 decreases significantly, from 42 percent (37 of 89 total cases) to less than 19 percent (17 cases).

In response to concern that, because of the DRG assignment, hospitals may not be able to afford to provide the cochlear implant to Medicare beneficiaries and they will continue to face reduced access to this technology, we once again note that a hospital may not refuse to provide a covered service to a Medicare beneficiary if it provides that service to other patients. Specifically, the Medicare regulations at 42 CFR 489.53(a)(2) provide that HCFA may terminate a hospital's Medicare provider agreement if it finds that the hospital places restrictions on the number of Medicare beneficiaries it will accept for treatment without placing the same restriction on the other populations it treats.

We are aware of the continuing concerns regarding payment for cochlear implant patients. As part of our proposal to move the partial glossectomy procedure from DRG 49 to DRGs 168 and 169, we evaluated all procedures assigned to DRG 49. As we noted in the proposed rule (58 FR 30224), partial glossectomy was the only procedure assigned to DRG 49 that had any significant volume (more than 10 cases) and a significantly lower average charge. We will continue to monitor the assignment of procedures to DRG 49 and to consider further classification changes as appropriate based on the volume and average charge of specific procedures.

3. Laparoscopic Cholecystectomy Procedures (DRGs 195–198)

Currently, when a patient whose principal diagnosis is classified to MDC 7 (Diseases and Disorders of the Hepatobiliary System and Pancreas) undergoes a cholecystectomy, the case is assigned to DRGs 195 through 198. The specific assignment is based on whether common bile duct exploration (C.D.E.) is performed and whether CCs are present. The DRGs' titles are as follows:

- DRG 195—Cholecystectomy with C.D.E. with CC.
- DRG 196—Cholecystectomy with C.D.E. without CC.
- DRG 197—Cholecystectomy without C.D.E. with CC.
- DRG 198—Cholecystectomy without C.D.E. without CC.

During the past few years, we have received comments suggesting that when a cholecystectomy procedure is performed by laparoscope, the case should be assigned to a different DRG or DRGs than are the other cholecystectomies. These commenters believe that this is appropriate because, although the laparoscopic (closed) procedure is more expensive than a traditional (open) cholecystectomy, use of the closed procedure results in shorter lengths of stay and, thus, lower

total resource use. Our original response to these commenters was that, in order to make this revision, the two types of cholecystectomies would have to be assigned separate ICD–9–CM procedure codes. Subsequently, effective with discharges occurring on or after October 1, 1991 (that is, beginning in FY 1992), separate procedure codes were established for the two types of procedures: 51.22 for open cholecystectomy and 51.23 for laparoscopic cholecystectomy.

Before we published the proposed rule, we analyzed the FY 1992 MedPAR data in which the new codes were used to assign cases to the four DRGs in MDC 7 to determine the most appropriate assignment for laparoscopic cholecystectomy procedures. We found that virtually all the laparoscopic cholecystectomy cases (approximately 99 percent) were assigned to DRGs 197 and 198. We also reviewed cases assigned to DRGs 193 and 194 (Biliary Tract Procedure Except Only Cholecystectomy with or without C.D.E.) and found that no laparoscopic cholecystectomies were assigned there.

After determining the distribution of laparoscopic cholecystectomy cases, we calculated total average standardized charges and lengths of stay for those cases as well as the open cholecystectomy cases in each of the affected DRGs. In DRGs 195 and 196, although the average length of stay for cases in which a laparoscopic cholecystectomy was performed is lower than the cases in which an open procedure was performed, the total average standardized charges were almost equal. For those cases assigned to DRGs 197 and 198, the average length of stay for the laparoscopic procedures is also less than that for the open procedures; however, the average standardized charge for the laparoscopic cases is much less than the charge for the open cholecystectomies.

	DRG 197		DRG 198	
	Length of stay	Average charge	Length of stay	Average charge
Laparoscopic procedure	6.4	11,873	2.3	6,415
Open procedure	10.2	15,750	5.4	7,887

Based on this analysis, we decided to leave the laparoscopic procedures with the open cholecystectomies in DRGs 195 and 196. However, the differences in length of stay and charges for the two types of procedures in DRGs 197 and 198 were large enough for us to propose reassignment of the laparoscopic cases. Since there is no other surgical DRG in MDC 7 that is similar clinically or in terms of resource use to the laparoscopic procedures, and because the cholecystectomy cases have traditionally been segregated from other procedures, we proposed to create two new DRGs for the laparoscopic procedures, as follows:

- DRG 493 Laparoscopic Cholecystectomy without C.D.E. with CC
- DRG 494 Laparoscopic Cholecystectomy without C.D.E. without CC

In addition, we proposed to revise the titles of DRGs 197 and 198 to read as follows:

- DRG 197 Cholecystectomy Except by Laparoscope without C.D.E. with CC
- DRG 198 Cholecystectomy Except by Laparoscope without C.D.E. without CC

We believe that the proposed reassignment of the laparoscopic cases to DRGs 493 and 494 would improve clinical coherence and provide for more appropriate payment. Further, this change would allow the payment for the traditional, open cholecystectomies to reflect the resource use necessary only for those procedures.

In the course of our analysis, we noted some claims that included procedure codes for both a laparoscopic cholecystectomy (51.23) and an open cholecystectomy (51.22). If a procedure is begun through the laparoscope and must be completed with an open procedure, the only code that should be included on the claim is the code for the open procedure. We are assuming that these claims did include an open procedure and, therefore, we believe the case should be assigned to DRGs 197 and 198. We would assign a claim to proposed DRGs 493 and 494 if the only cholecystectomy code in the claim is 51.23. Thus, coding the incomplete (or unsuccessful) closed procedure in addition to the open procedure will make no difference in assignment. However, we note that such double coding is incorrect.

Comment: We received many comments expressing concern about our proposal to create separate DRGs for laparoscopic cholecystectomy. In general, these commenters do not believe it is appropriate to establish a separate category at this time. Their main concern is that, although laparoscopic cholecystectomy is less costly on a "total-episode-of-care basis," the surgery supply costs and operating room costs are higher for these procedures than for the traditional open cholecystectomy procedures.

Further, the commenters are concerned that the new DRGs have been created based on only one year of data and we have not allowed enough time for the technology to evolve to maturity. More specifically, a few of the commenters believe that the charge data hospitals have reported for these procedures is flawed because hospitals are not reporting the increased cost of the laparoscopic surgical procedure. Another commenter stated that the charge data cited in the proposed rule is an approximation at best.

Some commenters objected to the proposed DRGs because they believe that payment for all cholecystectomies should relate to the patient condition and the episode of care, not the particular technology used. One commenter stated that even though this proposal may, in the short term, save the government money, in the long run it will result in either patient access problems or a tendency to continue performing the traditional, open cholecystectomies, resulting in total episode-of-care costs higher than the laparoscopic procedure.

Finally, one commenter believes that a final decision to proceed with the creation of these DRGs could force the performance of this procedure to move more rapidly, and perhaps prematurely, to an outpatient setting.

Response: When we calculate the DRG relative weights, we use the total charges reported by the hospital on its Medicare claim for the services it provided during a hospital inpatient stay. These charges specifically include, among others, operating room charges

and supply charges, which are separate entries on the claim form. The data in the MedPAR file incorporate all these separate charges as well as the total charges reported by the hospital. Thus, the file for FY 1992 contains the total charges reported by hospitals for laparoscopic cholecystectomies that they performed for discharges occurring during that year.

We do not doubt the commenter's statement that the operating room and surgery supply costs are higher for the laparoscopic procedure than are those costs for the open cholecystectomy. In fact, we made this same statement in the proposed rule (58 FR 30225). However, based on the total charge data reported by hospitals, the reduced costs associated with the shorter length of stay and fewer number of complications serve to lower the overall cost of a hospital stay for a laparoscopic procedure. Therefore, commenters' concern that we have not considered the entire episode-of-care costs in creating the new cholecystectomy DRGs is unfounded.

With regard to the commenters' request that we should delay the implementation of the new DRGs until the technology has evolved, we note that, of the total number of cholecystectomies performed in FY 1992 (150,727 cases in DRGs 195 through 198), approximately 55 percent were done laparoscopically. This percentage is even higher in the DRGs that we are splitting on the basis of approach (DRGs 197 and 198 (Cholecystectomy without C.D.E.)): 81,376 cases out of a total 134,661 or 60 percent. We believe that these numbers demonstrate that the new technology has evolved to the extent that it is being employed in a majority of Medicare cholecystectomy cases, and, therefore, creation of a DRG category for laparoscopic cholecystectomy is not premature.

Although, in general, we do not split DRGs for surgical procedures on the basis of the type of approach used in the procedure, we note that we have a long tradition of assigning procedures that are performed using either an open or closed approach to different DRGs based on the lower total resource use associated with the closed procedure. For example, lung biopsy can be performed either closed endoscopically (procedure code 33.27) or open (procedure code 33.28). The open procedure is assigned to DRG 75 (Major Chest Procedures) and the closed procedure is assigned to DRGs 76 and 77 (Other Respiratory System or Procedures). The FY 1994 relative weight for DRG 75 is 3.0397 and the weights for DRGs 76 and 77 are 2.4770 and 1.0443, respectively. Therefore, due to the large difference in the total average charge of the laparoscopic and open procedures and the volume of cases, we believe that it is appropriate to separate the two different approaches to cholecystectomy procedures into different DRGs.

Concerning the statement made by one commenter that this proposal may, in the short term, save the government money, we note that section 1886(d)(4)(C)(iii) of the Act requires that DRG reclassification and recalibration changes must be made in a manner that assures that aggregate payments are neither greater than nor less than the aggregate payments that would have been made without the changes. As discussed below in section II.C. of this preamble, in addition to normalizing the revised weights so that the average case weight before recalibration is equal to the average case weight after recalibration, we also make a budget neutrality adjustment to the standardized amounts. Therefore, the DRG classification or recalibration changes are designed to result in neither a savings nor a loss in total payments.

With regard to the commenters' concern that hospitals will limit the availability of laparoscopic cholecystectomies to Medicare beneficiaries, we repeat the statement we made above in response to a similar comment on the DRG 49 changes (section II.B.2 of this preamble). That is, the regulations at 42 CFR 489.53(a)(2) provide that HCFA may terminate a hospital's Medicare provider agreement if it finds that the hospital places restrictions on the number of Medicare beneficiaries it will accept for treatment if it does not place the same restrictions on the other populations it treats.

We disagree with the commenter that fears that the separation of the laparoscopic procedures from the open procedures may force these procedures to an outpatient setting prematurely. We believe that attending physicians will continue to determine the appropriate setting for surgical procedures and that these decisions are made based on medical factors rather than expected payment.

Comment: A few commenters objected to receiving payment only for the open procedure under DRG 197 or 198 in cases for which the laparoscopic approach was unsuccessfully attempted prior to performance of the open procedure. The commenters noted that they cannot predict which cases will result in a change of approach once the surgery is begun. One commenter requested that when a cholecystectomy is begun with the laparoscopic approach but completed with an open procedure, the hospital should receive the full payment amount for DRG 197 or 198 and part of the payment for DRG 493 or 494, as appropriate.

Response: Under the prospective payment system, a case is assigned to only one unique DRG based on the principal diagnosis, procedures performed, secondary diagnoses, and, in some cases, patient age, sex, and discharge status. Therefore, payment received for a case under the prospective payment system is based on the relative weight of only one DRG.

The situation referred to by the commenters is not unlike a case in which more than one procedure is performed. In those cases, only one procedure (or, in a few cases, two related procedures) dictates the DRG to which the case is assigned. If only one procedure is related to the principal diagnosis, then that procedure determines DRG assignment. If more than one procedure is related, then the case is assigned to a DRG based on surgical hierarchy. (See section II.B.5 of this preamble for a detailed discussion of surgical hierarchy.) If none of the procedures performed are related to the principal diagnosis, the case is assigned to one of the special DRGs for unrelated procedures (DRGs 468, 476, or 477). In no situation would a case receive more than one DRG payment. This is also true of cholecystectomies. If both the laparoscopic code (51.23) and the open code (51.22) are included on the claim, then the claim will be assigned to DRG 197 or 198, because of the higher weight of that class of DRGs. However, as noted in the proposed rule (58 FR 30226), such double coding is incorrect.

4. Tracheostomy Procedures (DRGS 482 and 483)

Effective with discharges occurring on or after October 1, 1990, all cases in which a tracheostomy is performed are assigned to either DRG 482 (Tracheostomy with Mouth, Larynx or Pharynx Disorder) or DRG 483 (Tracheostomy Except for Mouth, Larynx or Pharynx Disorder). The specific mouth, larynx, and pharynx diagnosis codes that occasion a case to be assigned to DRG 482 were listed in Table 6k of section IV of the addendum to the September 4, 1990 final rule (55 FR 36139). These cases were grouped separately because they incurred significantly lower charges than did the other tracheostomy cases. Cases with a principal diagnosis of a mouth, larynx, or pharynx disorder are more likely to require a tracheostomy as a therapeutic measure related to the principal

diagnosis rather than in response to respiratory failure requiring long-term ventilation.

It has been brought to our attention that several mouth, jaw, face, and neck diagnoses were not included on our original list of mouth, larynx and pharynx disorders. Since these diagnoses are clinically similar to those already on the list of diagnoses that cause assignment to DRG 482, we proposed adding them to that list effective with discharges occurring on or after October 1, 1993. The specific diagnosis codes are as follows:

054.2 Herpetic gingivostomatitis
099.51 Other venereal diseases due to Chlamydia trachomatis of pharynx
112.0 Candidiasis of mouth
170.1 Malignant neoplasm of mandible
173.0 Malignant neoplasm of skin of lip
176.2 Kaposi's sarcoma of palate
228.00 Hemangioma of unspecified site
228.01 Hemangioma of skin and subcutaneous tissue
228.09 Hemangioma of other sites
246.2 Cyst of thyroid
465.0 Acute laryngopharyngitis
465.8 Acute upper respiratory infections of other multiple sites
465.9 Acute upper respiratory infections of unspecified site
519.0 Tracheostomy complication
519.1 Other diseases of trachea and bronchus, not elsewhere classified
682.1 Cellulitis and abscess of neck
749.00–749.04 Cleft palate
749.10–749.14 Cleft lip
749.20–749.25 Cleft palate with cleft lip
750.21 Absence of salivary gland
750.22 Accessory salivary gland
750.23 Atresia, salivary duct
750.24 Congenital fistula of salivary gland
802.20–802.29 Fracture of mandible, closed
802.30–802.39 Fracture of mandible, open
802.4 Fracture of malar and maxillary bones, closed
802.5 Fracture of malar and maxillary bones, open
802.6 Fracture of orbital floor (blow-out), closed
802.7 Fracture of orbital floor (blow-out), open
802.8 Fracture of other facial bones, closed
802.9 Fracture of other facial bones, open
830.0 Closed dislocation of jaw
830.1 Open dislocation of jaw
873.40 Open wound of face, unspecified site, without mention of complication
873.41 Open wound of cheek, without mention of complication
873.50 Open wound of face, unspecified site, complicated
873.51 Open wound of cheek, complicated
874.02 Open wound of trachea, without mention of complication
874.12 Open wound of trachea, complicated
874.8 Open wound of neck, without mention of complication, not otherwise specified
874.9 Open wound of neck, complicated, not otherwise specified
900.82 Injury to multiple blood vessels of head and neck
900.89 Injury to other specified blood vessels of head and neck, not elsewhere classified
900.9 Injury to unspecified blood vessel of head and neck
925.1 Crushing injury of face and scalp
925.2 Crushing injury of neck
959.0 Face and neck injury, not otherwise specified

We note that diagnosis codes 925.1 and 925.2 are new codes that will be effective October 1, 1993. They replace current code 925 (Crushing injury of face, scalp, and neck). See Tables 6a and 6c in section V of the addendum to this final rule with comment.

We also proposed to change the titles of DRGs 482 and 483 to describe more accurately the types of cases that are classified to them. The proposed titles were as follows:

- DRG 482 Tracheostomy for Face, Mouth and Neck Diagnoses
- DRG 483 Tracheostomy Except for Face, Mouth and Neck Diagnoses

We received only one comment on this proposal, which supported our changes. Therefore, we are incorporating them into the final DRG classification system for FY 1994.

5. Surgical Hierarchies

Some inpatient stays entail multiple surgical procedures, each one of which, occurring by itself, could result in assignment of the case to a different DRG within the MDC to which the principal diagnosis is assigned. It is, therefore, necessary to have a decision rule by which these cases are assigned to a single DRG. The surgical hierarchy, an ordering of surgical classes from most to least resource intensive, performs that function. Its application ensures that cases involving multiple surgical procedures are assigned to the DRG associated with the most resource-intensive surgical class.

Because the relative resource intensity of surgical classes can shift as a function of DRG reclassification and recalibration, we reviewed the surgical hierarchy of each MDC, as we have for previous reclassifications, to determine if the ordering of classes coincided with the intensity of resource utilization, as measured by the same billing data used to compute the DRG relative weights.

A surgical class can be composed of one or more DRGs. For example, in MDC 5, the surgical class "heart transplant" consists of a single DRG (DRG 103) and the class "coronary bypass" consists of two DRGs (DRGs 106 and 107). Consequently, in many cases, the surgical hierarchy has an impact on more than one DRG. The methodology for determining the most resource-intensive surgical class, therefore, involves weighting each DRG for frequency to determine the average resources for each surgical class. For example, assume surgical class A includes DRGs 1 and 2 and surgical class B includes DRGs 3, 4, and 5, and that the average charge of DRG 1 is higher than that of DRG 3, but the average charges of DRGs 4 and 5 are higher than the average charge of DRG 2. To determine whether surgical class A should be higher or lower than surgical class B in the surgical hierarchy, we would weight the average charge of each DRG by frequency (that is, by the number of cases in the DRG) to determine average resource consumption for the surgical class. The surgical classes would then be ordered from the class with the highest average resource utilization to that with the lowest, with the exception of "other OR procedures" as discussed below.

This methodology may occasionally result in a case involving multiple procedures being assigned to the lower-weighted DRG (in the highest, most resource-intensive surgical class) of the available alternatives. However, given that the logic underlying the surgical hierarchy provides that the GROUPER searches for the procedure in the most resource-intensive surgical class, which may sometimes occur in cases involving multiple procedures, this result is unavoidable.

Notwithstanding the foregoing discussion, there are a few instances where a surgical class with a lower average relative weight is ordered above a surgical class with a higher average relative weight. For example, the "other OR procedures" surgical class is uniformly ordered last in the surgical hierarchy of each MDC in which it occurs, regardless of the fact that the relative weight for the DRG or DRGs in that surgical class may be higher than that for other surgical classes in the MDC. The "other OR procedures" class is a group of procedures that are least likely to be related to the diagnoses in

the MDC but are occasionally performed on patients with these diagnoses. Therefore, these procedures should only be considered if no other procedure more closely related to the diagnoses in the MDC has been performed.

A second example occurs when the difference between the average weights for two surgical classes is very small. We have found that small differences generally do not warrant reordering of the hierarchy since, by virtue of the hierarchy change, the relative weights are likely to shift such that the higher-ordered surgical class has a lower average weight than the class ordered below it.

Based on the preliminary recalibration of the DRGs, we proposed to modify the surgical hierarchy for MDC 3 (Diseases and Disorders of the Ear, Nose, Mouth and Throat) and MDC 9 (Diseases and Disorders of the Skin, Subcutaneous Tissue and Breast) as follows:

a. In MDC 3, we proposed to reorder Myringotomy with Tube Insertion (DRGs 61 and 62) above Tonsil and Adenoid Procedure Except Tonsillectomy and/or Adenoidectomy Only (DRGs 57 and 58).

b. In MDC 9, we proposed to reorder Skin, Subcutaneous Tissue and Breast Plastic Procedures (DRG 268) above Breast Procedures (DRGs 257, 258, 259, 260, 261, and 262).

We received no comments concerning the proposed surgical hierarchy. In addition, based on a test of the proposed changes using the most recent MedPAR file (June 1993) and the revised GROUPER software, we find that the changes we proposed are still supported by the data and no additional changes are required. Therefore, the proposed surgical hierarchy is incorporated in this final rule with comment.

6. Refinement of Complications and Comorbidities List

There is a standard list of diagnoses that are considered complications or comorbidities (CCs). This list was developed by physician panels to include those diagnoses that, when present as a secondary condition, would be considered a substantial complication or comorbidity. In preparing the original CC list, a substantial CC was defined as a condition that, because of its presence with a specific principal diagnosis, would increase the length of stay by at least 1 day for at least 75 percent of the patients.

In previous years, we have made changes to the standard list of CCs, either by adding new CCs or deleting CCs already on the list. For FY 1994, we did not propose any changes to the current CC list.

In the September 1, 1987 final notice concerning changes to the DRG classification system (52 FR 33143), we modified the GROUPER logic so that certain diagnoses included on the standard list of CCs would not be considered a valid CC in combination with a particular principal diagnosis. Thus, we created the CC Exclusions List. We made these changes to preclude coding of closely related conditions, to preclude duplicative coding or inconsistent coding from being treated as CCs, and to ensure that cases are appropriately classified between the complicated and uncomplicated DRGs in a pair.

In the May 19, 1987 proposed notice concerning changes to the DRG classification system (52 FR 18877), we explained that the excluded secondary diagnoses were established using the following five principles:

- Chronic and acute manifestations of the same condition should not be considered CCs for one another (as subsequently corrected in the September 1, 1987 final notice (52 FR 33154)).
- Specific and nonspecific (that is, not otherwise specified (NOS)) diagnosis codes for a condition should not be considered CCs for one another.
- Conditions that may not co-exist, such as partial/total, unilateral/bilateral, obstructed/unobstructed, and benign/malignant, should not be considered CCs for one another.
- The same condition in anatomically proximal sites should not be considered CCs for one another.
- Closely related conditions should not be considered CCs for one another.

The creation of the CC Exclusions List was a major project involving hundreds of codes. The FY 1988 revisions were intended to be only a first step toward refinement of the CC list in that the criteria used for eliminating certain diagnoses from consideration as CCs were intended to identify only the most obvious diagnoses that should not be considered complications or comorbidities of another diagnosis. For that reason and in light of comments and questions on the CC list, we have continued to review the remaining CCs to identify additional exclusions and to remove diagnoses from the master list that have been shown not to meet the definition of a CC stated above, as appropriate. (See the September 30, 1988 final rule for the revision made for the discharges occurring in FY 1989 (53 FR 38485), the September 1, 1989 final rule for the revision made for discharges occurring in FY 1990 (54 FR 36552), the September 4, 1990 final rule for the revision made for discharges occurring in FY 1991 (55 FR 36126), the August 30, 1991 final rule for the revision made for discharges occurring in FY 1992 (56 FR 43209), and the September 1, 1992 final rule for the revisions made for discharges occurring in FY 1993 (57 FR 39753).)

We proposed a limited revision of the CC Exclusions List to take into account the changes that will be made in the ICD–9–CM diagnosis coding system effective October 1, 1993. (See section II.B.8 of this preamble, for a discussion of these changes.) These proposed changes were made in accordance with the principles established when we created the CC Exclusions List in 1987.

Tables 6f and 6g in section V of the addendum to this final rule contain the revisions to the CC Exclusions List that will be effective for discharges occurring on or after October 1, 1993. Each table shows the principal diagnoses with proposed changes to the excluded CCs. Each of these principal diagnoses is shown with an asterisk and the additions or deletions to the CC Exclusions List are provided in an indented column immediately following the affected principal diagnosis.

CCs that are added to the list are in Table 6f—Additions to the CC Exclusions List. Beginning with discharges on or after October 1, 1993, the indented diagnoses will not be recognized by the GROUPER as valid CCs for the asterisked principal diagnosis.

CCs that are deleted from the list are in Table 6g—Deletions from the CC Exclusions List. Beginning with discharges on or after October 1, 1993, the indented diagnoses will be recognized by the GROUPER as valid CCs for the asterisked principal diagnosis.

Copies of the original CC Exclusions List applicable to FY 1988 can be obtained from the National Technical Information Service (NTIS) of the Department of Commerce. It is available in hard copy for $73.00 and on microfiche for $19.00, plus $3.00 for shipping and handling. A request for the FY 1988 CC Exclusions List (which should include the identification accession number, (PB) 88–133970) should be made to the following address: National Technical Information Service; United States Department of Commerce; 5285 Port Royal Road, Springfield, Virginia 22161; or by calling (703) 487–4650.

Users should be aware of the fact that all revisions to the CC Exclusions List (FYs 1989, 1990, 1991, 1992 and 1993) and those in Tables 6f and 6g of this

document must be incorporated into the list purchased from NTIS in order to obtain the CC Exclusions List applicable for discharges occurring on or after October 1, 1993.

Alternatively, the complete documentation of the GROUPER logic, including the current CC Exclusions List, is available from 3M/Health Information Systems (HIS), which, under contract with HCFA, is responsible for updating and maintaining the GROUPER program. The current DRG Definitions Manual, Version 10.0, is available for $195.00, which includes $15.00 for shipping and handling. Version 11.0 of this manual, which will include the changes proposed in this document as finalized in response to public comment, will be available in September 1993 for $195.00. These manuals may be obtained by writing 3M/HIS at: 100 Barnes Road; Wallingford, Connecticut 06492; or by calling (203) 949–0303.

Please specify the revision or revisions requested.

We received two comments concerning changes made to the CC Exclusions List for new ICD–9–CM diagnosis codes. Those comments and our response are set forth below in the section describing the changes to the ICD–9–CM coding system (section II.B.8. of this preamble).

7. Review of Procedure Codes in DRGs 468, 476, and 477

Each year, we review cases assigned to DRG 468 (Extensive OR Procedure Unrelated to Principal Diagnosis), DRG 476 (Prostatic OR Procedure Unrelated to Principal Diagnosis), and DRG 477 (Nonextensive OR Procedure Unrelated to Principal Diagnosis) in order to determine whether procedures are properly assigned among these DRGs.

DRGs 468, 476, and 477 are reserved for those cases in which none of the OR procedures performed during a hospital inpatient stay is related to the principal diagnosis. These DRGs are intended to capture atypical cases, that is, those cases not occurring with sufficient frequency to represent a distinct, recognizable clinical group. DRG 476 is assigned to those discharges in which one or more of the following prostatic procedures are performed and are unrelated to the principal diagnosis:

60.0 Incision of prostate
60.12 Open biopsy of prostate
60.15 Biopsy of periprostatic tissue
60.18 Other diagnostic procedures on prostatic and periprostatic tissue
60.2 Transurethral prostatectomy
60.61 Local excision of lesion of prostate
60.69 Prostatectomy NEC
60.93 Repair of prostate
60.94 Control of (postoperative) hemorrhage of prostate
60.99 Other operations on prostate

All remaining OR procedures are assigned to DRGs 468 and 477, with DRG 477 assigned to those discharges in which the only procedures performed are nonextensive procedures that are unrelated to the principal diagnosis. The original list of the ICD–9–CM procedure codes for the procedures we consider nonextensive procedures if performed with an unrelated principal diagnosis was published in Table 6c in section IV of the addendum to the September 30, 1988 final rule (53 FR 38591). As part of the September 4, 1990, August 30, 1991, and September 1, 1992 final rules, we moved several other procedures from DRG 468 to 477. (See 55 FR 36135, 56 FR 43212, and 57 FR 23625, respectively.)

We annually conduct a review of procedures producing DRG 468 or 477 assignments on the basis of volume of cases in these DRGs with each procedure. Our medical consultants then identify those procedures occurring in conjunction with certain principal diagnoses with sufficient frequency to justify adding them to one of the surgical DRGs for the MDC in which the diagnosis falls. This year's review did not identify any necessary changes; therefore, we did not propose to move any procedures from DRGs 468 or 477 to one of the surgical DRGs.

We also reviewed the list of procedures that produce assignments to each of DRG 468, 476, and 477 to ascertain if any of those procedures should be moved to one of the other DRGs based on average charges and length of stay. Generally, we move only those procedures for which we have an adequate number of discharges to analyze the data. Based on our review this year, we proposed several moves.

We identified two prostatic procedures currently assigned to DRG 468 that, in terms of resource use, would be more appropriately classified in DRG 476. Therefore, we proposed to assign the following prostatic procedures to DRG 476:

60.81 Incision of periprostatic tissue
60.82 Excision of periprostatic tissue

Based on our analysis of the OR procedures that produce DRG 477 assignments, we discovered five procedures that are significantly more resource intensive than the other procedures assigned to that DRG. Therefore, we proposed to move the following procedures to the list of procedures that result in assignment to DRG 468:

20.49 Other mastoidectomy
39.32 Suture of vein
39.53 Repair of arteriovenous fistula
43.42 Local excision of other lesion or tissue of stomach
70.50 Repair of cystocele and rectocele

Similarly, after reviewing and analyzing the procedures that assign cases to DRG 468 to determine if any of those procedures might more appropriately be classified to DRG 477, we proposed to move an extensive number of cases from DRG 468 to DRG 477.

All of the reassignments among DRGs 468, 476, and 477 will be effective with discharges beginning on or after October 1, 1993. We received no comments concerning the reassignments from DRG 477 to DRG 468 and those from DRG 468 to DRG 476. However, we received one comment on the procedures we proposed to move from DRG 468 to 477 as follows.

Comment: One commenter suggested that some of the procedures that we proposed to move to DRG 477 involve considerably more resources and risk to the patient than the other procedures in this DRG. The commenter requested that we reconsider the reassignment of the following procedures:

49.6 Excision of anus
83.5 Bursectomy
85.63 Rotator cuff repair
85.93 Revision of implant of breast
85.94 Removal of implant of breast
85.95 Insertion of breast tissue expander
85.96 Removal of breast tissue expander
85.99 Other operations of the breast

Response: As discussed in the proposed rule (58 FR 30228), in analyzing the procedures that produce assignments to each of DRG 468, 476, and 477 for possible reassignment, we use a two-step approach. First, we consider the charge and length-of-stay for each procedure compared to the overall average charge and length of stay for the DRG in which the procedure is currently assigned and the DRG to which we are considering reassignment. Second, our medical consultants provide clinical evaluation to determine the optimal, appropriate classification.

In a few cases, we proposed to move procedures that were members of a code "family," based on the charge and length of stay data associated with other members of the family. This was the case with our proposal to move the five breast procedures. The FY 1992 charge and length of stay data for procedure codes 85.94 and 85.96 were not only well below the average charge and length of stay for cases assigned to DRG

468, they were also far less than the average charge and length of stay for cases assigned to DRG 477. Based on the advice of our medical consultants and a review of the breast procedures currently assigned to DRG 477, we believe that, even though we had no cases to review for procedure codes 85.93, 85.95, and 85.99, they should all be moved. Since we review this list every year, we can analyze the validity of our change in future years. However, we strongly believe the move is appropriate.

For the other three procedures cited by the commenter, codes 49.6, 83.5, and 85.63, we had average charge and length of stay data for FY 1992. Again, each of these procedures had averages that were lower than the DRG 477 averages. Therefore, assigning these procedures to DRG 477 ensures more appropriate payment for these cases based on resource use, whereas leaving them in DRG 468 not only overpays these cases but serves to lower the average charge and, therefore, the relative weight for that DRG overall. The entire list of procedures that will be moved from DRG 468 to DRG 477 effective with discharges occurring on or after October 1, 1993 is set forth below in Table 6h in section V. of the addendum to this final rule with comment. We note that, although procedure code 86.3 (other local excision or destruction of lesion or tissue of skin and subcutaneous tissue) was included in Table 6h in the proposed rule, this procedure in not an OR procedure and should be removed from the list. (See the June 29, 1993 correction notice (58 FR 34742).)

8. Changes to the ICD–9–CM Coding System

As discussed above in section II.B.1. of this preamble, the ICD–9–CM is a coding system that is used for the reporting of diagnoses and procedures performed on a patient. In September 1985, the ICD–9–CM Coordination and Maintenance Committee was formed. This is a Federal interdepartmental committee charged with the mission of maintaining and updating the ICD–9–CM. This includes approving coding changes, and developing errata, addenda, and other modifications to the ICD–9–CM to reflect newly developed procedures and technologies and newly identified diseases. The Committee is also responsible for promoting the use of Federal and non-Federal educational programs and other communication techniques with a view toward standardizing coding applications and upgrading the quality of the classification system.

The Committee is co-chaired by the National Center for Health Statistics (NCHS) and HCFA. The NCHS has lead responsibility for the ICD–9–CM diagnosis codes included in Volume 1—Diseases: Tabular List and Volume 2—Diseases: Alphabetic Index, while HCFA has lead responsibility for the ICD–9–CM procedure codes included in Volume 3—Procedures: Tabular List and Alphabetic Index.

The Committee encourages participation in the above process by health-related organizations. In this regard, the Committee holds public meetings for discussion of educational issues and proposed coding changes. These meetings provide an opportunity for representatives of recognized organizations in the coding fields, such as the American Health Information Management Association (AHIMA) (formerly American Medical Record Association (AMRA)), the American Hospital Association (AHA), and various physician specialty groups as well as physicians, medical record administrators, health information management professionals, and other members of the public to contribute ideas on coding matters. After considering the opinions expressed at the public meetings and in writing, the Committee formulates recommendations, which then must be approved by the agencies.

The Committee presented proposals for FY 1994 coding changes at public meetings held on May 7, August 4, and December 3, 1992, and finalized the coding changes after consideration of comments received at the meetings and in writing within 30 days following the December 1992 meeting. The initial meeting for consideration of coding issues for implementation in FY 1995 was held on May 6 and 7, 1993 and a second meeting was held on August 5, 1993. Copies of the minutes of these meetings may be obtained by writing to the co-chairpersons representing NCHS and HCFA. We encourage commenters to address suggestions on coding issues involving diagnosis codes to: Sue Meads, Co-Chairperson; ICD–9–CM Coordination and Maintenance Committee; NCHS; rm. 9–58; 6525 Belcrest Road; Hyattsville, Maryland 20782.

Questions and comments concerning the procedure codes should be addressed to: Patricia E. Brooks, Co-Chairperson; ICD–9–CM Coordination and Maintenance Committee; HCFA, Office of Coverage and Eligibility Policy; rm. 401 East High Rise Building; 6325 Security Boulevard; Baltimore, Maryland 21207.

The ICD–9–CM code changes that have been approved will become effective October 1, 1993. The new ICD–9–CM codes are listed, along with their DRG classifications, in Tables 6a and 6b (New Diagnosis Codes and New Procedure Codes, respectively) in section V of the addendum to this final rule with comment. As we stated above, the code numbers and their titles were presented for public comment in the ICD–9–CM Coordination and Maintenance Committee meetings. Both oral and written comments were considered before the codes were approved. Therefore, comments were solicited only on the proposed DRG classifications.

The Committee has also approved the expansion of certain ICD–9–CM codes to require an additional digit for valid code assignment. Diagnosis codes that have been replaced by expanded codes or have been deleted are in Table 6c (Invalid Diagnosis Codes). The invalid diagnosis codes will not be recognized by the GROUPER beginning with discharges occurring on or after October 1, 1993. The corresponding new expanded codes are included in Tables 6a and 6b. Revisions to diagnosis and procedure code titles are in Tables 6d (Revised Diagnosis Code Titles) and 6e (Revised Procedure Code Titles), which also include the proposed DRG assignments for these revised codes.

Throughout the year, we receive many requests from hospitals, doctors, and others for advice on the correct coding of hospital inpatient claims. Often, this request follows a change in coding made by a Peer Review Organization (PRO) during a DRG validation review. We would like to reiterate the responsibilities and authority of the PRO concerning correct coding as well as HCFA's role in the process of issuing coding advice.

Among the many duties of the PROs is responsibility for validating the accuracy of coded data on hospital bills for Medicare beneficiaries. The PROs verify that the ICD–9–CM codes on the bill accurately represent the principal and secondary diagnoses and procedures reported for Medicare patients. The PROs retain the ultimate authority for coding decisions and DRG validation concerning individual claims of these patients. The PROs should follow any official coding advice they have received from HCFA through the regional offices.

Because of the rapidly changing nature of medical technology, as well as accurate coding and sequencing of discharge diagnoses, PROs occasionally have questions concerning coding policy. The PROs forward their

questions to HCFA central office through their regional offices. After consulting with AHIMA and AHA, and obtaining clearance from NCHS, HCFA sends its response to the regional office that made the request. Copies are also sent to all other regional offices to share the information with PROs in their areas. Additional copies are sent to the SuperPRO, NCHS, AHA, and AHIMA for further dissemination.

The effective date of implementation of the coding advice is the date of the response. Approved final coding policy sent as instructions to the PROs supersedes any previously printed coding advice. In disputes about correct coding, final decisions by HCFA and NCHS will prevail.

Since any correspondence concerning HCFA's coding instructions to the PROs is in the public domain, that correspondence may be reprinted in any trade publication. For example, AHIMA has published these responses in their Journal of AHIMA on a regular basis. We encourage widespread dissemination of this official advice to assure greater consistency in coding practices for Medicare claims.

The comments we received regarding the ICD–9–CM coding changes fall into four general categories: Errors in our Tables 6a through 6f; disagreement about the assignment of a new or revised code as a CC; various requests for additional information about the ICD–9–CM codes;.and comments about coding policy.

Based on the comments and our own review, we have corrected several misspellings and missing words in the code descriptions in Tables 6a and 6d. The codes for which changes have been made are as follows:

Table 6a: 078.88, 250.22, 250.23, 451.82, 451.83, 451.84, 704.02, 733.12, 733.16, V73.88, and V73.98.
Table 6d: 250.20, 250.21, and 995.0.

The latter three categories of comments are addressed below.

Comment: We received two comments urging us to change our designation of new, expanded diagnosis code 440.23 (Atherosclerosis of the extremities with ulceration) from non-CC to CC. The commenters believe that the new code, 440.23, is intended as a replacement for code 707.1 (Ulcer of lower limbs, except decubitus), which is considered a CC, and, thus, reason that code 440.23 should also be a CC.

Response: The new code 440.23 is one of three new codes that are further fifth-digit expansions of the existing 440.2 category of codes for atherosclerosis of the arteries of the extremities. The new 440.2X codes allow for more specific diagnoses to be coded in certain cases. There are cases that currently may be coded with 707.1 that now will be coded with 440.23, but the new code does not replace 707.1. Code 707.1 will still be used as is appropriate. That is, both codes will be available for use, but each describes different diagnoses.

We disagree with the commenter's assertion that 440.23 should be designated as a CC because 707.1 is a CC. The two codes describe different etiologies. The decision to make 440.23 a non-CC was based, in part, on the example of code 454.0 (Varicose veins of the lower extremities, with ulcer). The latter diagnosis is a non-CC and the coding structure is similar to that used for the ulcer described by 440.23. Further, our clinical experts believe that the diagnosis described by 440.23 is similar in severity and resource use to that described by 454.0, and, therefore, should not be designated as a CC.

Comment: One commenter objected to the non-CC designation given to some of the diabetes mellitus codes (250.10, 250.20, 250.30, 250.40, 250.50, 250.60, 250.70, 250.80, 250.90) that are currently counted as CCs. The commenter states that diabetes mellitus, both insulin dependent and noninsulin dependent, has been considered a comorbid condition for many years.

Response: Although the diagnosis code numbers for diabetes cited by the commenter are the same numbers that currently exist, they will no longer describe the same conditions effective October 1, 1993. The diabetes mellitus codes have been revised so that instead of two fifth-digit categories, there are now four. The cited codes (those ending with a fifth-digit of "0") will now be used to code only those cases in which the patient has diabetes that is adult-onset type, noninsulin dependent, and not stated as uncontrolled. The other three series of fifth-digit codes, which describe more serious diabetes mellitus diagnoses, are all designated as CCs.

We based our decision to designate the "0" category codes as non-CCs on the clinical judgment of our medical consultants, who believe that these patients do not require the same level of resource use as patients classified by the remaining 250 category of codes. We expect that with the new diabetes codes, which allow much more specific identification of patients' diabetic clinical profile, we will be better able to evaluate the resources required by patients who have diabetes as a secondary diagnosis.

Comment: We received two comments regarding Tables 6f, Additions to the CC Exclusions List, and 6g, Deletions From the CC Exclusions List, set forth in section V of the addendum to this final rule with comment period. One commenter pointed out that nine of the non-CC diabetes codes (250.10, 250.20, 250.30, 250.40, 250.50. 250.60, 250.70, 250.80, 250.90) appear in Table 6f. The commenter believes that only diagnosis codes that are designated as CCs should appear in that table. The other commenter noted that code 665.14 (Rupture of uterus during labor, postpartum condition or complication) had not been removed as it should have been from Table 6g.

Response: Section II.B.6 of the preamble, above, provides a full explanation of the Additions to, and Deletions from, the CC Exclusions Lists, Tables 6f and 6g. The appearance in Table 6f of the diabetes diagnosis codes specified by the commenter is correct. The codes appear two ways in that table, as principal diagnoses and as additions to the exclusions listed in columns below the principal diagnoses. In table 6f, the asterisked codes denote principal diagnoses for which the list of codes that are in an indented column beneath it will not be counted as CCs. For example, when code 250.10 is a principal diagnosis, as denoted with an asterisk, the codes listed beneath it (250.02, 250.03, 250.12, 250.13, * * * 780.03) will not be counted as a CC when coded for the same case. When a code that was previously a CC becomes a non-CC due to coding revisions (for example, 250.10), it will be printed in this list as one of the members in the indented columns beneath the principal diagnoses, as is appropriate, because it will no longer count as a CC for the listed (or any) principal diagnosis.

Regarding the second commenter's concern, code 665.14 appears in Table 6g because it is now an invalid code and is, therefore, being removed from the CC exclusions list. We note that all of the diagnosis codes that were considered CCs and that are now invalid codes (see Table 6c) appear in Table 6g.

Comment: One commenter requested that we publish revised diagnosis code category headings when a formerly valid diagnosis code is made invalid due to a revision of the codes in that group to require a fifth digit. These four-digit, invalid codes sometimes become category headings for the valid fifth-digit codes that were subdivided from the four-digit code. The commenter recommends that the revised category title headings also be added to the Tables set forth in the proposed and final rules.

Response: We publish the ICD–9–CM coding system changes in the proposed and final rules in order to display our CC and DRG assignments of new and

revised codes. We also publish an informational list of invalid codes that will no longer be recognized by the Medicare GROUPER. The proposed and final prospective payment rules are not a replacement for ICD–9–CM coding manuals. We publish only that coding information that is necessary for public understanding and implementation of the DRG classification system. Therefore, we do not believe that we should publish the information requested by the commenter.

Comment: We received one comment approving the addition of a fifth-digit to diagnosis code category 530 (Diseases of esophagus); however, the commenter stated that this change does not eliminate the sequencing dilemma between DRGs 174 and 175 and DRGs 182 through 184. The commenter believes the design of the fifth-digits in this category should follow the same methodology as category 535 (Gastritis and duodenitis) to ensure comparable DRG grouping.

Response: As discussed above in this section of the preamble, suggestions on coding issues involving diagnosis codes should be addressed to Sue Meads at NCHS.

Comment: Several commenters were disappointed in the very minor changes made to Volume 3 of the ICD–9–CM (the procedure codes) for FY 1994. One commenter stated that Volume 3 has not kept pace with the many advances in surgical techniques and several commenters stated that changes in these codes that were discussed at the Coordination and Maintenance Committee meetings held on May 7 and December 12, 1992 were not implemented in spite of broad public support.

Response: There are severe physical space constraints that limit the number of changes that can be made to the procedure codes in Volume 3. HCFA is aware that this Volume does not contain the most current codes to match changing technology, but, due to its current configuration, Volume 3 is limited to 4-digit codes. To date, there has been no consensus on how this Volume should be revised to accommodate more codes. We will continue to explore possible solutions to this problem.

Revisions and changes that are discussed at the Coordination and Maintenance Committee meetings during a particular year do not necessarily become final code changes. These meetings are a forum for discussion of ICD–9–CM coding changes and policy. As noted above, a Federal interdepartmental committee, the ICD–9–CM Coordination and Maintenance Committee, is charged with the mission of maintaining and updating the ICD–9–CM coding system. At the public meetings of the Committee, coding issues that have been brought to the Committee's attention are introduced for discussion with the public. Also, at these meetings, educational coding information is presented. The final changes made to the coding system are made through consensus of the Committee members after consideration of the oral comments made at the meetings and the written comments received in the 30 days following the final meeting for the year (generally held in December).

We again encourage commenters to address questions, comments, and suggestions on issues involving diagnosis codes to Sue Meads and those concerning the procedure codes to Patricia E. Brooks at the addresses set forth above.

Comment: We received several comments about the information presented in the proposed rule concerning coding advice provided by HCFA to its Peer Review Organizations (PROs). Commenters are concerned that the advice HCFA provides to the PROs and HCFA Regional Offices is not immediately available to the public and that this advice is being given without benefit of public comment. One commenter stated that HCFA should not have the authority to make coding decisions without public comment and publication.

Further concerns expressed were that the consistency of coding information will not be maintained if the information is not disseminated uniformly; that, if the implementation date is the date of HCFA's response to the PRO inquiry, there is no assurance that all affected parties across the nation will know about changes in time to implement the changes concurrently; and that HCFA seems to be abandoning the existing process for reaching consensus in coding advice.

Response: The process HCFA uses to communicate coding advice for Medicare beneficiaries to the PROs has been in place since HCFA entered into the PRO contract agreements several years ago. The description of that process in the proposed rule was informational and certainly not intended to be an announcement of a policy change.

As stated above in this section of the preamble, the PRO retains the ultimate authority for coding decisions and DRG validation concerning individual claims of Medicare patients. In disputes about correct coding, final decisions by HCFA and NCHS will prevail, as has always been the case.

While we cannot maintain mailing lists for dissemination of our correspondence concerning coding instructions to the PROs, it is in the public domain and may be reprinted.

9. Other Issues

a. DRG Refinements. For several years, we have been analyzing major refinements to the DRG classification system to compensate hospitals more equitably for treating severely ill Medicare patients. These refinements, generally referred to as severity of illness adjustments, would be based on using certain complications and comorbidities (CCs) to create DRGs specifically for very ill patients who consume far more resources than do other patients classified to the same DRGs in the current system. This approach has been taken by various other groups in refining the DRG system, most notably the research done for Yale and the changes incorporated by the State of New York into its all-payer DRG system.

Our preliminary work on these refinements is almost finished. As discussed in more detail below, our plan is to incorporate comments and suggestions we receive and to consider proposing the complete system as part of the FY 1995 prospective payment system proposed rule, which will be published in the spring of 1994. However, as the final rule published on September 1, 1992 (57 FR 39761) suggests, we would not propose to make significant changes to the DRG classification system unless we are able either to improve our ability to predict coding changes by validating in advance the impact that potential DRG changes may have on coding behavior, or to make methodological changes to prevent building the inflationary effects of the coding changes into future program payments.

Section 1886(d)(4)(C)(iii) of the Act mandates that DRG reclassification and recalibration changes should be implemented in such a manner that aggregate payments are not affected. Moreover, we do not believe it is prudent policy to make changes for which we cannot predict the effect on the case-mix index and, thus, payments. Our goal is to refine our methodology so that we can fulfill, in the most appropriate manner, both the statutory requirement to make appropriate DRG classification changes and to recalibrate DRG relative weights (as mandated by section 1886(d)(4)(C) of the Act) and the statutory mandate to make DRG changes in a budget neutral manner.

In addition to the severity changes, we also intend to improve the classification and relative weights of the DRGs that apply to newborns, children, and maternity patients. The Medicare population does not include many of these individuals. The original DRG classification system was developed from analysis of claims data representative of the total inpatient population. When we calculated the original Medicare weights for the DRGs to which newborn, children and maternity patients are classified, we used non-MedPAR discharge records from Maryland and Michigan hospitals because there were either no MedPAR cases or too few cases classified to these DRGs to provide a reasonably precise estimate of the average cost of care. (See the September 1, 1983 prospective payment final rule with comment period (48 FR 39768).) Since that time, because of the lack of MedPAR data, these low-volume DRGs have not been analyzed and refined, and the relative weights assigned to them may no longer be entirely reflective of the resources needed to treat the patients. We again intend to rely on data bases outside the MedPAR file to supplement our data.

We received several comments related to DRG refinement.

Comment: While the comments we received were generally supportive of our plans to refine the DRGs to compensate hospitals more equitably for treating severely ill Medicare patients, two commenters expressed opposition to the suspension of adjustments mandated by section 1886(d)(4)(C)(i) of the Act, stating that DRG improvements should not be delayed because of HCFA's inability to guarantee budget neutrality. One commenter believes concern over the impact of changes in coding behavior should not cause a delay in implementation as we have the ability to correct for forecasting errors in subsequent years. Another commenter stated that our statutory responsibility requires reasonable effort to assure budget neutrality but does not mandate that actual budget neutrality be achieved. This commenter recommended that we either refine the current method of estimating DRG classification impact or develop a new model for estimating the effects of DRG refinements. The commenter continued that we should not limit ourselves to relatively minor "tinkering" and believes that refusal to implement improvements in DRG payment equity is inappropriate.

Response: Our concerns over our ability to predict the impact of coding changes on DRG classification, and the limitations of our recalibration methodology in establishing budget neutrality, are discussed in detail in the June 4, 1992 proposed rule (57 FR 23626) and the September 1, 1992 final rule (57 FR 39759). In those documents, we stated our decision to limit DRG modifications to relatively insignificant changes that, in the aggregate, will increase program payments by less than 0.1 percent if we have underestimated by 10 percent the number of cases that will receive more favorable payment under the DRG classification changes that provide incentives for coding improvement. In that proposed rule, we solicited public comment on possible approaches that could be implemented in the future by legislation or administratively to account for coding changes that result from revisions in the DRGs. However, to date, we have not received any recommended methodology for DRG recalibration that is both feasible and appropriate. (See the September 1, 1992 final rule (57 FR 39762) for a full discussion of the comments we received and our responses.)

The comments received in response to our statement concerning future DRG refinement do not offer practical solutions to the problems we encounter in coding changes and the inflationary effects that accompany our current DRG recalibration methodology. First, as to the suggestion that we not delay implementation of DRG severity refinements because we have the ability to correct forecasting errors in future years, we note that we have made retroactive adjustments in the past but they have been less than satisfactory and have met with strong resistance. In fact, it was after we made a reduction of 1.22 percent in the DRG relative weights effective for FY 1990 to adjust for an increase in the average case-weight value due to several DRG classification changes made effective in FY 1987 that Congress enacted section 1886(d)(4)(C)(iii) of the Act. (See the September 1, 1989 final rule (54 FR 36468) for a detailed description of the retroactive reduction in DRG relative weights.) As noted above, this section requires that each year's DRG classification and recalibration changes be budget neutral to the year before. Therefore, contrary to the commenter's belief, we do not have the authority to correct past forecasting errors.

We continue to believe that, in the interests of fiscal responsibility, the best method of predicting the impact of DRG changes is one that solves the problem before it occurs or as soon thereafter as possible. Any adjustment methodology must be seen as fair and nonpunitive. Retroactive adjustments are more often perceived as punitive rather than as compensatory.

Section 1886(d)(4)(C)(iii) of the Act clearly requires that reclassification and recalibration changes beginning with FY 1991 be made in a manner that assures that the aggregate payments are neither greater than nor less than the aggregate payments that would have been made without the changes. While we agree with the commenter that we cannot guarantee "actual budget neutrality," our interpretation of this mandate is that we assure that, to the best of our ability, the reclassification and recalibration changes do not affect aggregate payments. Thus, the DRG changes we make must be based on the data we have available and that data must be reliable to predict how case-mix will change based on these DRG changes.

We reiterate our commitment to making changes in the DRG system to improve payment equity and our belief that it is not prudent policy to make changes for which we cannot predict the effect on the average case-mix index value and, thus, payments. The incentives to code the highest-weighted, appropriate DRG in any severity adjustment system must be balanced by predictable forecasting and recalibration precision.

Comment: Another commenter, supporting our approach to improve equity to hospitals treating severely ill Medicare patients, made two suggestions. First, DRG refinement should be kept simple so that it is not costly to implement and is relatively easy to audit, and, second, consideration should be given to State programs that have already instituted severity adjustments for hospital reporting on private pay patients. This commenter believes that multiple severity systems will impose financial burdens on hospitals and recommends that States be brought into the consultative process to consider data requirements.

Response: We agree that any DRG refinement should be efficient and efficacious, incurring minimal implementation and operating costs. In our quest for severity measurements that would enhance hospital payment equity, we have made a significant investment in the assessment of a variety of severity systems. One of our criteria for evaluating these methodologies has been the ease with which it could be introduced into the current DRG grouping systems. Our goal has been to identify a system that distinguishes levels of severity of illness but at the same time imposes little change in the information required or necessary coding. Thus, we have

focused on indicators for severity that rely on information routinely collected on hospital systems.

We appreciate the suggestion that we consider State programs that are already developed to avoid duplication and resulting multiple severity systems. As noted in the proposed rule (58 FR 30230) and above, we have considered State severity systems, primarily the system currently operative in New York State.

In addition, we have completed evaluation of other severity systems currently in use at the State level, most notably the Yale refined DRGs, used by the Ohio State Department of Health, and Medisgroups, required by Pennsylvania for all hospital reporting. We are receptive to comments and suggestions from States, as well as other interested parties, and look forward to evaluating their recommendations as applicable to Medicare DRG refinement. Once we finish the preliminary work on our severity adjustments, we plan to consult with interested organizations. We intend to publish a notice in the **Federal Register** announcing the availability of our draft proposal and requesting public comment, which we will take into consideration before formally proposing a revised DRG classification system.

Comment: We received one comment recommending that the severity adjustment for hospitals also include review of the physician side of the Medicare payment equation. While expressing approval of our efforts to refine DRGs to account for severity differences between hospital patient populations, this commenter believes that, in many cases, the patients that require the most extreme resource use in the hospital also require the most from the physician. The commenter acknowledges that the data they have seen at this time does not address the potential linkages between the hospital and physician but, nevertheless, recommends that our severity review include the physician payment component of health care cost.

Response: We acknowledge the importance of maintaining a perspective on health care costs that includes all providers and suppliers of health care services, including, but not limited to, hospitals and physicians. We appreciate the commenter's recognition of data limitations that impede linking physician and hospital costs into episodes of care. We have concentrated our efforts on data that were more readily available and reliable, as we believe this to be more productive in severity measurement assessment, but do not deny the role of physician payment in the total cost of care. As we progress in our evaluation, we shall be alert for possible data sources that would enhance our DRG refinement.

Comment: We received one comment concerning the planned improvement of the classification and relative weights of the DRGs that apply to newborns, children, and maternity patients. The commenter believes the non-Medicare data we use to improve these DRGs should include discharges from a wide variety of geographic areas. Further, we were cautioned against the use of charge information in determining relative weights. The commenter believes that, due to competitive pricing strategies involved with maternity services, charges may not be a good measure of relative resource consumption and requested that we consider using available cost information in refining DRG relative weights associated with non-Medicare cases.

Response: We agree with the commenter that a geographically dispersed data base will best reflect hospital inpatient resource use for the pediatric, newborn, and maternity cases that are not represented with sufficient volume in the Medicare population. Since calculating the original Medicare weights for the DRGs to which these cases are assigned, based on data from Maryland and Michigan, we have acquired access to other data sources. We intend to use a data base representing a national distribution of hospital claims to supplement MedPAR data.

In response to the commenter's suggestion that cost information, rather than charges, be used as the basis for establishing the relative weights for the pediatric, newborn, and maternity patients, we have not yet progressed far enough in our analysis to decide what data will be used to calculate the DRG weights. In calculating the DRG relative weights for Medicare discharges, we believe the use of charge data ensures a timely measure of resource consumption with maximum internal consistency and external validity. That is, fully coded Medicare charge data contains detailed information on diagnoses, procedures, age, sex, and discharge destination, thus permitting more accurate classification of cases than is possible using Medicare cost-based data.

The choice of a data base to construct relative DRG weights that most accurately reflect current relative resource use has been a basic issue in recalibration. Since FY 1986, the DRG weights have been based on charge data. For a discussion of the options considered and the reasons we chose to use charge data beginning in FY 1986, we refer the reader to the rules published on June 10, 1985 (50 FR 24372) and September 3, 1985 (55 FR 35652). Briefly, in order to determine if DRG relative weights based on charges accurately reflected the relative resource consumption across DRGs, we conducted a study that compared relative DRG weights computed based on costs with those based on charges for the same fiscal year. We found the cost-based weights and the weights based on charges were highly correlated, with a correlation coefficient of .99.

We most recently addressed the issue of recalibration based on cost data versus charge data in the September 1, 1989 final rule (54 FR 36470). In that document, we stated our belief that charge data continue to be preferable to the use of cost data. Ancillary "costs" are, in fact, ancillary charges adjusted by cost-to-charge ratios, and, thus, are dependent on charge data and are subject to the same limitations as the "charge" weights. In addition, the most current Medicare charge data available run approximately 2 years behind the impending fiscal year (for example, we are using FY 1992 data to establish relative weights for FY 1994), while the cost data lag by at least 3 years and considerably longer for audited data. The use of older cost data would delay the recognition of new technologies and changes in medical practice patterns.

Therefore, we continue to believe that, in general, the advantages of using fully coded, timely charge data outweigh any disadvantages that are inherent in the use of these data. We note that every effort is being made to ensure that our data and subsequent analysis will result in valid and reliable DRG classifications and relative weights for the newborn, pediatric, and maternity DRGs.

b. Mechanical Ventilation. Over the past several years, based on comments we have received, we have made several changes to the DRG classification system in order to recognize the higher costs of patients who require mechanical ventilation. Also, the ICD–9–CM procedure codes for mechanical ventilation and related procedures have undergone several revisions to better identify these patients.

Beginning with discharges occurring on or after October 1, 1987 (FY 1988), a new DRG was created for patients on mechanical ventilation in MDC 4 (Diseases and Disorders of the Respiratory System) (52 FR 33146, September 1, 1987). Those patients assigned to a medical DRG in MDC 4 who also receive mechanical ventilation (procedure code 93.92 (Other

mechanical assistance to respiration)) through insertion of an endotracheal tube (procedure code 96.04) were assigned to new DRG 475 (Respiratory System Diagnosis with Ventilator Support). At the same time, we created DRG 474 (Respiratory System Diagnosis with Tracheostomy) for those patients in MDC 4 who receive a tracheostomy (procedure codes 31.1, 31.21, or 31.29).

Effective October 1, 1988 (FY 1989), procedure code 93.92 was revised to "Other mechanical ventilation" and a new code 93.90 was created for continuous positive airway pressure (CPAP), which had previously been included in procedure code 93.92. The classification rules for DRG 475 were revised to incorporate this coding change so that medical cases in MDC 4 with both procedure codes 96.04 and 93.92 or 93.90 would be assigned to that DRG (53 FR 38591, September 30, 1988).

The DRG classification for mechanical ventilation patients assigned to DRG 475 was again revised effective with discharges beginning on or after October 1, 1989 to address the problem that hospitals were experiencing with patients on mechanical ventilation who had been intubated before being admitted to the hospital (54 FR 36454, September 1, 1989). With this change, the intubation code (96.04) would no longer be required for assignment to DRG 475. Thus, the only procedure code necessary for assignment to DRG 475 would be the mechanical ventilation (code 93.92). The new classification allowed mechanical ventilation patients who had been intubated or had a tracheostomy performed elsewhere to be assigned to DRG 475 in the receiving hospital (when the patient has no tracheostomy or surgical procedure performed during the hospital stay and has a principal diagnosis in MDC 4).

As a part of the FY 1991 changes to the DRG classification system, we created two new DRGs for patients who receive a tracheostomy during their inpatient stay (DRGs 482 and 483). Cases are assigned to these DRGs based on the presence of a tracheostomy procedure code before they are assigned by diagnosis to an MDC (55 FR 36015, September 4, 1990). As noted above, before this change, a tracheostomy case was assigned to DRG 474 only if the principal diagnosis was assigned to MDC 4. In response to that revision, we received many comments requesting that we make a similar expansion for the mechanical ventilation DRG. One of the problems we foresaw with such an expansion was distinguishing between patients who received short-term ventilator assistance from those who require long-term ventilation. Clearly, the latter group would consume far more resources than the former. However, the procedure codes in place at the time merely denoted that mechanical ventilation had been performed and not its duration. We stated that we would continue to analyze this issue.

In an attempt to complete that analysis, effective with discharges occurring on or after October 1, 1991, procedure code 93.92 was replaced with three new codes that denote time spent on mechanical ventilation. These new codes are: 96.70 (Continuous mechanical ventilation of unspecified duration), 96.71 (Continuous mechanical ventilation for less than 96 consecutive hours), and 96.72 (Continuous mechanical ventilation for 96 consecutive hours or more) (56 FR 43298; August 30, 1991).

The first full year of data using these new codes (FY 1992) has become available for analysis. (The FY 1992 data are used to propose changes to the FY 1994 DRG classification and relative weights and to calculate the final weights for that year.) We analyzed the mechanical ventilation cases in a 10 percent sample of the FY 1992 cases posted to the MedPAR file as of September 30, 1992. We determined the average charge and length of stay (LOS) for these cases by procedure code and by MDC, looking separately at surgical and medical cases. We believe that it is important to separate the medical and surgical cases because patients who are undergoing surgery are often routinely intubated and receive mechanical ventilation during the procedure and for a short period of time thereafter. The following table shows the results based on the 10 percent sample.

Procedure code	Duration of continuous ventilation	Type	Number of cases	Average charge ($)	Average LOS (Days)
96.70	Unspecified	Medical	353	24,474	11.9
		Surgical	77	60,864	27.3
96.71	<96 hours	Medical	10,657	17,584	8.8
		Surgical	2,500	33,967	14.9
96.72	>96 hours	Medical	5,207	43,981	19.1
		Surgical	2,081	91,566	38.1

Since our preliminary analysis of the 10 percent sample strongly suggests that there may be a need for further DRG refinement of these mechanical ventilation cases, especially those with long-term ventilation, we intend to analyze alternative approaches using the complete MedPAR data. We believe that changes to the DRG classification system that might require modification of the basic DRG logic, such as would be required to address mechanical ventilation cases outside the usual MDC structure, similar to tracheostomies, should be considered in conjunction with DRG refinements to account for severity of illness differences. Depending on the classification structure that emerges from the refinement activity, it could be possible to address the mechanical ventilation cases within the basic structure of the revised classification system by, for example, grouping such cases with other high resource cases within the existing DRGs (or group of DRGs). On the other hand, we might need to establish new DRGs exclusive to mechanical ventilation to which cases would be assigned on the basis of procedure codes rather than first assigning them to an MDC based on the principal diagnosis. Therefore, we will complete our analysis of the mechanical ventilation cases and consider the appropriate placement of these cases as a part of the larger DRG refinement work.

Comment: A national organization made several recommendations regarding the mechanical ventilation cases. They recommended that procedure codes 96.71 and 96.72 be used permanently and for all cases involving mechanical ventilation and that these codes be revised to increase the threshold that identifies the duration of the continuous mechanical ventilation from 96 hours to 120 hours. They also recommended that we restructure DRG 483 (now entitled "Tracheostomy Except for Face, Mouth,

and Neck Diagnoses") by assigning cases to this DRG based on the duration of mechanical ventilation, not on the method used to achieve the ventilation; that is, assign all long-term mechanical ventilation cases (identified by code 96.72) to DRG 483, regardless of whether the ventilation was achieved by endotracheal intubation or by tracheostomy. The commenter recommended that assignment to this new DRG 483 continue to be made before MDC assignment. The commenter also recommended that the title of DRG 483 be revised to reflect these classification changes and suggested the title "Prolonged Mechanical Ventilation."

Response: Procedure codes 96.71 and 96.72 for mechanical ventilation will continue to be valid and used in their current form (that is, with the same code number and title description) unless they are made invalid or revised according to the process described in section II.B.8 of this preamble (Changes to the ICD–9–CM Coding System). The recommendation to revise the codes by increasing the threshold that identifies the duration of continuous mechanical ventilation from 96 hours to 120 hours has been forwarded to the staff responsible for the procedure code revisions and will be discussed at the December 2, 1993 Coordination and Maintenance Committee Meeting. We note, however, that the current time duration of 96 hours was decided upon based on the recommendation of the commenter's organization. Any change in that designation will result in another 2-year wait for data related to the new codes.

Regarding the recommendation to require the use of procedure codes 96.71 and 96.72 to identify all cases in which mechanical ventilation is used (and the duration of that ventilation), we expect hospitals to fully code every case using the Uniform Hospital Discharge Data Set (UHDDS) definitions and instructions. The number of diagnosis and procedure codes that hospitals are able to report to the Medicare program through the billing process was increased from five to nine diagnosis codes and from three to six procedure codes effective October 1, 1991 (56 FR 43213, August 30, 1991). (Hospitals that had to make internal changes to accommodate the expansion were allowed a delay until April 1, 1992.) Our main purpose in expanding the fields was to provide us with additional information that we need to base future DRG classification revisions on the most complete possible data analysis.

As we noted in the proposed rule (58 FR 30231) and above, in this section, we will consider the commenter's recommendation to restructure DRG 483 or create a similar pre-MDC DRG for long-term mechanical ventilation cases as a part of our larger DRG severity of illness refinements.

c. DRG 209 (Major joint and limb reattachment procedures of lower extremity). In an effort to address concerns regarding the resources required for cases involving major joint replacements of the lower extremity, we have been analyzing these cases over the past few years to determine whether or not alternative DRG classifications would improve clinical coherence and better relate a hospital's patient mix to its resource demands.

Effective with discharges on or after October 1, 1989 (FY 1990), the ICD–9–CM procedure codes were revised to differentiate between initial joint replacements and revisions of joint replacements, and no longer differentiated between joint replacements that used methacrylate cement and those that did not (54 FR 36466 and 36549, September 1, 1989).

The data on these codes for joint replacements and revisions of joint replacements became available for analysis of DRG changes for FY 1992 as set forth in the September 4, 1990 final rule. Our analysis showed that although the revision of hip replacement cases are more expensive than the initial hip replacement cases assigned to DRG 209 (Major Joint and Limb Reattachment Procedures), the difference was not enough to justify reclassifying the revision cases (56 FR 43205). However, the analysis did indicate that separating the procedures of the upper extremity and procedures of the lower extremity would improve the DRG classification. Therefore, the upper extremity procedures were removed from DRG 209 and assigned to a new DRG 491 (Major Joint and Limb Reattachment Procedures of Upper Extremity), and the title of DRG 209 was revised to "Major Joint and Limb Reattachment Procedures of Lower Extremity."

In the September 1, 1992 final rule, we again addressed the classification of cases to DRG 209. In that rule, we analyzed the assignment of major limb reattachment procedures. Although we made no change to the DRG 209 assignments, we received comments that we should address major joint replacements of the lower extremity that involve infection or mechanical complications. The commenters stated that these cases are extremely resource intensive and, because a small number of specialty hospitals treat a disproportionate number of these cases, the hospitals are being systematically underpaid under the current DRG 209. In response, we stated that we would evaluate this issue as a part of our FY 1994 DRG analysis (57 FR 39751).

We analyzed DRG 209 cases with a principal diagnosis of infection or a principal diagnosis of mechanical or other complication. The diagnoses used in this analysis are listed below:

Infection diagnoses:
- 711.05 Pyogenic arthritis of the pelvic region and thigh
- 711.06 Pyogenic arthritis of the lower leg
- 711.07 Pyogenic arthritis of the ankle and foot
- 996.66 Infection and inflammatory reaction due to internal joint prosthesis
- 996.67 Infection and inflammatory reaction due to other internal orthopedic device, implant, and graft

Complication (mechanical or other) diagnoses:
- 733.1 Pathological fracture
- 996.4 Mechanical complication of internal orthopedic device, implant, and graft
- 996.77 Other complications due to internal joint prosthesis
- 996.78 Other complications due to other internal orthopedic device, implant, and graft

We analyzed the average standardized charges and average length of stay for DRG 209 cases with a principal diagnosis of infection or mechanical or other complication and for cases without such principal diagnoses. We found that approximately 10 percent of the total DRG 209 cases have one of the infection or complication diagnoses as principal. However, the average charge and length of stay for those cases is only slightly higher than that for all cases. In addition, the differences are well within one standard deviation of the average charge. Therefore, we did not propose any changes to the classification of cases in DRG 209.

Comment: We received a comment requesting that we quantify our discussion (that is, provide numerical descriptions) and provide additional data on various groupings of the infection, complication, and other cases in DRG 209. The commenter also requested that we evaluate the issues of infection and complication of prior hip replacements separately, as they had previously requested. The commenter also requested that we evaluate the impact of the disproportionate distribution that concentrates these more complicated cases in a few specialty hospitals.

Response: To evaluate the issue of whether or not the more complicated

hip replacements, which involve infection or complications, should be classified separately from the noncomplicated cases in DRG 209, we analyzed various classifications of these cases. The cases with infection or mechanical or other complications as principal diagnosis were evaluated as a group. We believe that this grouping of complicated cases is reflective of the types of infection and complication cases that the orthopedic specialty hospitals treat. This group of complicated cases was compared to the other (noninfection and noncomplication) cases in DRG 209 and to all cases assigned to DRG 209 under the current classification. We also evaluated the infection cases separately from the mechanical and other complication cases. A 10 percent sample of the FY 1992 cases (posted to the MedPAR as of September 30, 1992) was used for this analysis, and the results are summarized below.

Type of case	Number of cases	Average charge ($)	Average length of stay (days)
DRG 209: (All cases)	26,791	18,903	9.8
DRG 209: Without PDx infection or complication	24,111	18,625	9.8
DRG 209: With PDx of infection or complication	2,680	21,401	10.2
DRG 209: With PDx of infection	109	31,782	17.0
DRG 209: With PDx of complication	2,571	20,961	9.9

In this 10 percent sample, there were 26,791 cases in DRG 209 with an average charge of $18,903 and an average length of stay of 9.8 days. Approximately 10 percent of the cases in DRG 209 have either an infection or a complication (as indicated by the principal diagnosis (PDx)) and have an average charge of $21,401, which is only $2,498 (13 percent) higher than the average charge of all cases in DRG 209. We note that cases with a principal diagnosis of infection only have a much higher charge ($31,782) than the average for DRG 209 overall. However, there are fewer than 0.5 percent of the total DRG 209 cases in this category. Based on these findings, no revision to the classification of the cases in DRG 209 was proposed.

Regarding the commenter's request for additional data with which to evaluate these cases, as noted in the proposed rule (58 FR 30261), the complete MedPAR file is available to the public for $3,250 per fiscal year requested. This file, known as the "Expanded Modified MedPAR File," is created twice annually; the initial version for the proposed rule (May) and the final version at publication of the final rule (September). Requesters may call the Division of Data Documentation and Release request line at (410) 597–5151 or write to: Health Care Financing Administration, Public Use Files, Accounting Division, P.O. Box 17255, Baltimore, Maryland 21203–7255.

d. Epilepsy. Effective October 1, 1989, the diagnosis codes identifying epilepsy were modified to distinguish between intractable and nonintractable epilepsy. In addition, we added two new procedure codes to identify special procedures typically performed in the diagnosis and treatment of intractable epilepsy. Since the data on claims using these codes became available, we have conducted analyses to determine if the resource requirements of patients with intractable epilepsy differ from those required for all other epilepsy patients. (See the August 30, 1991 final rule (56 FR 43215) and the September 1, 1992 final rule (57 FR 39810).) As a result of these previous analyses, we concluded that, although intractable epilepsy patients have higher charges than do patients with nonintractable epilepsy, these differences are not significant enough to warrant any DRG classification change.

This year, we continued to monitor the resources that prospective payment hospitals use in treating epilepsy patients. The analysis set forth in the proposed rule, based on FY 1992 MedPAR data updated through December 1992, identified 21,684 discharges with a principal diagnosis of epilepsy in DRGs 24, 25, and 26 (Seizure and Headache). These patients represent 29 percent of all patients assigned to these DRGs, which is the same percentage as in last year's analysis using FY 1991 MedPAR data. Intractable epilepsy patients account for less than 4 percent of the DRGs' total discharges, which is also similar to the FY 1991 data.

This recent analysis resulted in findings comparable to previous analyses; that is, the intractable epilepsy cases incur higher average charges ($8,524) than the nonintractable cases ($6,958). These charges compare to average charges of $7,303 for all cases assigned to DRGs 24, 25, and 26. For all three DRGs, the average charge incurred by patients with intractable epilepsy remains higher than the average charge for nonintractable epilepsy patients and the average charge of each of the DRGs overall. However, this difference is well within the variation in charges above and below the average charge.

We also analyzed the average charge for those epilepsy patients who received video and radio-telemetered electroencephalographic monitoring (procedure code 89.19) and intracarotid amobarbital testing (procedure code 89.10). These are the special tests performed in the diagnosis and treatment of intractable epilepsy patients. The results of our analysis show that both intractable and nonintractable patients receive these services. For procedure code 89.10, the average charge for patients receiving this service is below the average charge for each of the DRGs and for both intractable and nonintractable cases. When procedure code 89.19 is present, the average charge is higher than the average charge for DRGs 24 and 25, but below the average charge for all intractable patients in DRGs 24 and 26. However, with fewer than 1 percent of the total epilepsy cases reporting 89.10 and only 1.6 percent reporting 89.19, we do not believe there is sufficient data to support a definitive statement regarding the impact on charges as a result of using of these procedures. Psychological services, another frequently cited service for intractable patients, were reported with even less frequency, with only six cases (an increase from the two cases in our previous analysis).

Provider-level analysis identified 975 hospitals treating intractable epilepsy patients. There were 844 hospitals treating fewer than 5 cases, 83 hospitals with 5 to 10 cases each, and 48 with 10 or more cases. The average charges for these hospitals follow a normal distribution, with some incurring average charges above and some below the average charge for all cases. We note that, of the 17 hospitals with 20 or more intractable epilepsy discharges, 13 (76 percent) had a lower average charge for

those cases than the average charge for all hospitals. Contrary to the assertions of high-volume epilepsy treatment centers, our analysis leads us to conclude that these hospitals may not be as disadvantaged by the current classification as other hospitals might be.

In conclusion, our analysis of both intractable and nonintractable epilepsy cases using FY 1992 MedPAR data confirms our prior conclusion that, although intractable epilepsy patients, particularly those with video-telemetered monitoring, do incur higher charges than patients without intractable epilepsy or telemetry, these differences are not currently of significant magnitude to justify a new DRG or other modification to the existing DRGs for these cases. We note, as we have in the past, that without accurate coding for the intensive services required for diagnosis and treatment of these patients, we cannot document consistent and reliable differences between patients receiving neurodiagnostic services and those not using these services. Given the low volume of patients, the minimal differences in average charges between intractable epilepsy cases and those of the DRG overall, the distribution of cases across a large number of hospitals, and the inconsistencies in charges between high-volume and other hospitals, we find there is insufficient evidence to justify a DRG modification at this time. Therefore, we did not propose any changes in DRG assignment for epilepsy patients.

Comment: We received one comment concerning the assignment of intractable epilepsy patients. The commenter disagreed with our decision not to revise the DRG classification system for patients with intractable epilepsy, particularly those receiving intensive neurodiagnostic monitoring. The commenter believes the DRG classification does not account for the greater resource use of these patients due to the difficulty in identifying these patients because there are a limited number of codes available and hospitals fail to consistently use the available codes. Further, the commenter continued, HCFA limited its analysis to averaged data that do not account for the financial risks facing hospitals with specialized epilepsy centers. The commenter believes that ProPAC's recommendation in its March 1, 1992 report for a revision of the DRG system for intractable epilepsy patients, especially those receiving intensive neurodiagnostic monitoring, is a more accurate representation of the financial problems faced by hospitals with epilepsy centers and encourages us to reassess its analysis and implement ProPAC's recommendation. (See the June 4, 1992 proposed rule for a copy of this recommendation (57 FR 23891) and the September 1, 1992 final rule for our response to this recommendation (57 FR 39810).) In addition, the commenter encourages us to work with the epilepsy community to develop a more accurate data base so that a fair determination can be made as to the appropriate adjustment in the DRG classification system for epilepsy patients.

The commenter also referred to an analysis conducted by HCFA that identified average charges for patients under the age of 65 with intractable epilepsy. In that analysis, patients under the age of 65 years classified to DRG 25 whose claims included procedure code 89.19 (Video and radio-telemetered electroencephalographic monitoring) showed higher average charges compared to other patients assigned to that DRG. According to the commenter, this is the population at risk: The disabled Medicare beneficiary under age 40 who is admitted to a specialized epilepsy center for comprehensive evaluation. The commenter expressed concern that this specific analytic finding was not addressed in the proposed rule.

The commenter concluded by referencing proposed budget reconciliation legislation that included a provision requiring the Secretary to analyze data for intractable epilepsy patients admitted for neurodiagnostic monitoring and to revise the DRG classification system for these patients as appropriate.

Response: Since the data using the revised diagnosis codes that distinguish between intractable and nonintractable epilepsy first became available with the FY 1990 MedPAR, we have routinely analyzed the costs of treating epilepsy, comparing intractable and nonintractable charges with and without the use of procedure codes 89.10 and 89.19. Our results have consistently found that, although intractable epilepsy patients were indeed more costly to treat than nonintractable cases, the difference was not sufficient to warrant any DRG classification change.

Since publication of the proposed rule, we have updated our analysis of both intractable and nonintractable epilepsy cases using the latest update to the FY 1992 MedPAR file (June 1993). Our reassessment of these data confirms our prior conclusion that, although intractable epilepsy patients, particularly those with video-telemetered monitoring, do incur higher charges than patients without intractable epilepsy or telemetry, the difference is not currently of significant magnitude to justify a new DRG or other modification to the existing DRGs for these cases. The following table summarizes our most recent epilepsy analysis findings, comparing the average charges between epilepsy and other cases assigned to the same DRG. For each entry, the number of cases is included in parenthesis.

	Intractable epilepsy	Nonintractable epilepsy	All epilepsy	All cases
DRG 24	$9,199	$7,398	$7,582	$7,627
	(1,576)	(13,882)	(15,458)	(56,761)
DRG 25	5,689	3,934	4,254	4,091
	(1,240)	(5,558)	(6,798)	(22,523)
DRG 26	17,202	6,568	5,911	7,314
	(1)	(9)	(10)	(42)
All Cases	7,657	6,408	6,566	6,623
	(2,817)	(19,449)	(22,266)	(79,326)

Resource use at the specialized epilepsy treatment centers compared to treatment by other providers was previously addressed in detail in the September 1, 1992 final rule (57 FR 39812). At that time, we noted that, of the 52 epilepsy special treatment centers identified, 8 had no Medicare epilepsy discharges, and the remaining 44 treated a variable number of cases with 28 percent of these providers incurring charges above average, but

well within the expected range for a normal distribution.

In the analysis of the most recent FY 1992 MedPAR data, we identified 37 specialized epilepsy treatment centers, with a volume of intractable epilepsy patients ranging from a low of 1 case to a high of 55 cases. We note that several of the specialty centers are children's hospitals, psychiatric hospitals, or psychiatric units in acute care hospitals, all of which are excluded from the prospective payment system. Thus, the data for these providers are not included, as our analysis is limited to acute care hospitals subject to the prospective payment system; that is, the facilities paid based on the DRG relative weights. The 588 intractable epilepsy cases treated at specialty centers had average charges of $8,276, compared to the $7,657 average charge of treatment for all intractable epilepsy patients. Although the specialty centers do experience higher average charges per patient, the difference ($619) is not great enough to justify a classification change.

The HCFA study referenced by the commenter, in which we examined the resource use for intractable epilepsy patients under 65 years of age who received procedure code 89.19 and are classified to DRG 25, was completed too late for inclusion in the proposed rule. In that study, we found that this group of patients did, in fact, have a higher resource use than either intractable epilepsy patients in DRG 24 or the intractable epilepsy patients without procedure 89.19 assigned to DRG 25. The following table summarizes the resource use by intractable epilepsy patients under age 65 compared to those of all ages:

DRG 25	All ages	Age < 65
All Cases	$4,091	$3,073
Intractable Epilepsy Cases	5,689	6,065
Intractable Epilepsy Cases with 89.19	8,391	8,499

These findings indicate that the use of procedure code 89.19 does have an impact on average charges in DRG 25. However, the magnitude of the difference is more a function of treatment utilizing telemetry than the age difference, since 97 percent of the 284 intractable epilepsy patients in DRG 25 who received this treatment were under age 65. However, the volume (276 cases) is not sufficient to justify a separate DRG for these patients.

As to the commenter's recommendation that we adopt ProPAC's recommendation and revise the DRG classification for patients with intractable epilepsy, particularly those receiving intensive neurodiagnostic monitoring, our objections to this recommendation are clearly stated in the prospective payment proposed rule June 4, 1992 (57 FR 23663) and in the final rule September 1, 1992 (57 FR 39810). Our current analysis of intractable epilepsy, with and without intensive neurodiagnostic monitoring, continues to support our position on this issue. That is, although intractable epilepsy patients incur higher charges than other patients within the same DRG, there is not a sufficient differential nor sufficient volume to warrant a DRG modification.

Although the proposed legislation referred to by the commenter was not included in the final budget bill (Pub. L. 103-66), we will continue to monitor the resource use by intractable epilepsy patients.

e. Automatic implantable cardioverter defibrillator (AICD) procedures (DRG 116). For several years, we received correspondence concerning the appropriate DRG assignment of certain procedures involving automatic implantable cardioverter defibrillators (AICDs). When a patient whose principal diagnosis is classified to MDC 5 (Diseases and Disorders of the Circulatory System) receives a total AICD system implant or replacement (procedure code 37.94), the case is assigned to DRG 104 or 105 (Cardiac Catheterization). However, prior to October 1, 1992, if a procedure was performed that involved the implantation or replacement of only part of the AICD system (that is, replacement or implant of either the leads or pulse generator only), the case was assigned to DRG 120 (Other Circulatory System OR Procedures). Effective with discharges occurring on or after October 1, 1992, these procedures were assigned to DRG 116 (Other Permanent Cardiac Pacemaker Implant or AICD Lead or Generator Procedure). Although we proposed no further changes to this DRG assignment for FY 1994, we received several comments.

Comment: Commenters requested that we change the assignment for procedures in which replacement or implantation of only part of the AICD system (either the leads or pulse generator) is performed from DRG 116 to DRG 115 (Permanent Cardiac Pacemaker Implantation with AMI, Heart Failure or Shock). The relevant procedure codes are the following: 37.95 (Implantation of automatic cardioverter/defibrillator lead(s) only), 37.96 (Implantation of automatic cardioverter/defibrillator pulse generator only), 37.97 (Replacement of automatic cardioverter/defibrillator lead(s) only), 37.98 (Replacement of automatic cardioverter/defibrillator pulse generator only).

The commenters expressed concern that, even with the revised classification to DRG 116, hospitals are not being adequately paid for these procedures. Based on the results of an August 1992 study commissioned by the AICD manufacturer, the commenters estimate that these procedures should be assigned to a DRG with a relative weight of 3.7300. (The FY 1994 proposed relative weights for DRGs 115 and 116 were 3.5820 and 2.4239, respectively.) Therefore, the commenters assert that assignment of AICD cases to DRG 115 would be more equitable.

Response: As explained in detail in the September 1, 1992 final rule (57 FR 39749), the current clinical composition and relative weights of the surgical DRGs in MDC 5 do not offer a perfect match with the AICD cases. After reviewing the current DRGs in terms of clinical coherence and similar resource use, we determined that DRG 116 was the best fit possible.

Since reassignment of these procedures to DRG 116, we have reanalyzed the cases based on the most recent update (June 1993) to the FY 1992 MedPAR file. Based on that file, the average standardized charge for AICD cases was $21,978 for the 1,186 cases assigned to DRG 116. The average standardized charge for all cases assigned to DRG 116 was $18,283 and, for DRG 115, was $27,356. The $3,695 difference between the average charge for AICD cases in DRG 116 and all cases in DRG 116 is well within the variation in charges for that DRG. However, the average charge for DRG 115 is $5,378 more than the average charge for an AICD case. Clearly, the difference in charges between the average AICD case and DRG 116 is less than the difference between the cases and DRG 115.

The lengths of stay for the AICD cases assigned to DRG 116 are similar to, and actually shorter than, those of all cases in DRG 116. The average length of stay for the AICD cases assigned to DRG 116 is 5.1 days compared to 6.8 days for all cases in DRG 116. The average length of stay for cases in DRG 115 is 13.5, more than twice as long as the AICD cases.

In past years, there have been differences in average charges between our analyses and those of the commenters. Although the commenters provided no average charge amounts this year, it is worth noting that our analyses include all cases in our data base, whereas the AICD studies have historically excluded those cases the manufacturer believes to be incorrectly

coded by the hospital or for which the charges reported by the hospital appear too low. The measures we have implemented to safeguard against miscoded AICD cases are explained in detail in the September 1, 1992 final rule (57 FR 39749).

We believe that the cost of the AICD device is largely responsible for the high average charge for these cases (the most recent price of which we are aware is $13,500). We believe as other device manufacturers enter the market, increased competition may result in a decrease in the price of these devices and a corresponding drop in the average charge for a hospital stay for AICD procedures.

Pending new developments and continued improvements in code and charge reporting, we believe continued assignment of these cases to DRG 116 is appropriate.

f. Simple pneumonia and pleurisy (DRG 89). Comment: We received two comments concerned with the proposed reduction in weight for DRG 89 (Simple Pneumonia and Pleurisy Age > 17 with CC). Although recognizing that these cases cannot be identified, these commenters stated that resistant pneumonia requires extra treatment resources and should, therefore, be classified in a separate DRG. We were urged to use caution in reducing the weight of DRG 89, considering how important a role pneumonia plays in the survival and prompt discharge of the elderly or the immunocompromised.

Response: In the proposed rule, we did not make any DRG classification changes to DRG 89. However, in recalibrating the weights, the proposed weight for DRG 89 fell from the FY 1993 level of 1.1581 to 1.1464. Each DRG weight is relative to the weight of all other DRGs, and a change in the charges for cases in any one DRG may affect the weight assigned to other DRGs. (See section II.C. of this preamble for a description of the methodology for recalibration of DRG relative weights.) Since we proposed no changes that affected the classification of cases to DRG 89, this reduction is merely a reflection of the fact that the average resource consumption of cases assigned to all other DRGs increased relative to the resource consumption of the DRG 89 cases.

We note that, although the relative weight for DRG 89 has been variable over time, with an increase in relative weight from FY 1985 to FY 1986 and again from FY 1987 to FY 1988, the pattern has been for steadily decreasing relative weights from FY 1988 to the present. The final DRG 89 relative weight for FY 1994 is 1.1447.

In response to the suggestion that resistant pneumonia be recognized in a separate DRG, this is not possible at this time, as the commenters acknowledge, because there is no way to distinguish these patients from other pneumonia cases through the ICD–9–CM diagnosis codes. The procedure for revising diagnosis codes is handled through the ICD–9–CM Coordination and Maintenance Committee as discussed above in section II.B.8 of this preamble.

g. Lung transplants. Comment: We received one comment urging that a national coverage determination be made for lung transplants. In addition, the commenter requested that one or more DRGs and respective weights be created for this procedure independent of the coverage determination to facilitate equitable payments for those cases in which a Part A fiscal intermediary approves a particular lung transplant case for coverage. The commenter has also recommended that when a national coverage decision is made, payment be made retroactive to the effective date of that coverage.

Response: We addressed a similar comment in the September 1, 1992 final rule (57 FR 39757). A final decision to cover lung transplants on a national basis has not yet been made by HCFA. It has not been our practice to create a new DRG category for an experimental procedure, but rather to assign the procedure to one of the available DRGs based on principal diagnosis and resource use. Thus, lung transplants (procedure code 33.5) are currently assigned to DRG 75 (Major Chest Procedures), the highest-weighted surgical DRG in MDC 4 (Diseases and Disorders of the Respiratory System). If national coverage is determined, we will review the conditions of that coverage and determine the appropriate placement of any new DRGs that are necessary.

We believe that it is inappropriate to create a DRG for an experimental procedure, especially one as resource-intensive as a lung transplant, for three reasons. First, we have very few Medicare cases upon which to build a relative weight. In addition, any weight we set must be used in recalibrating the weights of all other DRGs. Since the weight for lung transplants must, by the nature of the procedure, be one of the highest, if not the highest, weight in the DRG system, it will serve to lower, to some degree, the weights of all other lower-weighted DRGs. We do not believe it is fair for a procedure that has not yet been approved for coverage on a national basis to have an effect on the payment received by all other cases. Finally, we cannot predict which transplant cases will be approved for coverage, as this is a decision made by the fiscal intermediary on a case-by-case basis because there are no national coverage requirements. Therefore, we do not have a basis for estimating the number of transplant cases for the coming Federal fiscal year as is required by our recalibration process. (See section II.C. of this preamble, below, for a description of this process.) For all these reasons, we do not believe that we should create a DRG for lung transplants prior to the effective date of the national coverage decision.

We note that in the case of both heart and liver transplants, when a national coverage decision was made, enhanced payment under the newly created DRGs for those procedures (DRG 103 and 480, respectively) was made retroactive to the date of coverage. Unless there is some compelling reason why this should not be the case for lung transplants once they are approved for coverage, we intend to follow the same policy.

C. Recalibration of DRG weights. We proposed to use the same basic methodology for the FY 1994 recalibration as we did for FY 1993. (See the September 1, 1992 final rule (57 FR 39758).) That is, we proposed to recalibrate the weights based on charge data for Medicare discharges. However, we proposed to use the most current charge information available, the FY 1992 MedPAR file, rather than the FY 1991 MedPAR file. The MedPAR file is based on fully-coded diagnostic and surgical procedure data for all Medicare inpatient hospital bills.

The proposed recalibrated DRG relative weights were constructed from FY 1992 MedPAR data, received by HCFA through December 1992, from all hospitals subject to the prospective payment system and short-term acute care hospitals in waiver States. The FY 1992 MedPAR file at that time included data for approximately 10.6 million Medicare discharges. The MedPAR file updated through June 1993 includes data from approximately 10.7 million discharges and is the file used to calculate the weights set forth in Table 5 in section V of the addendum to this final rule with comment.

The methodology used to calculate the final DRG relative weights from the FY 1992 MedPAR file is as follows:

- All the claims were regrouped using the revised DRG classification revisions discussed above in section II.B of this preamble.
- Charges were standardized to remove the effects of differences in area wage levels, indirect medical education costs, disproportionate share payments,

and, for hospitals in Alaska and Hawaii, the applicable cost-of-living adjustment.

• The average standardized charge per DRG was calculated by summing the standardized charges for all cases in the DRG and dividing that amount by the number of cases classified in the DRG.

• We then eliminated statistical outliers using the same criterion as was used in computing the current weights. That is, all cases outside of 3.0 standard deviations from the mean of the log distribution of charges per case for each DRG were eliminated.

• The average charge for each DRG was then recomputed (excluding the statistical outliers) and divided by the national average standardized charge per case to determine the relative weight.

• We established the relative weight for heart transplants (DRG 103) in a manner consistent with the methodology for all other DRGs except that the heart transplant cases that were used to establish the weight were limited to those Medicare-approved heart transplant centers that have cases in the FY 1992 MedPAR file. Similarly, we limited the liver transplant cases that were used to establish the weight for DRG 480 (Liver Transplant) to those hospitals that are Medicare-approved liver transplant centers.

• Acquisition costs for kidney, heart, and liver transplants continue to be paid on a reasonable cost basis. Unlike other excluded costs, the acquisition costs are concentrated in specific DRGs (DRG 302 (Kidney Transplant); DRG 103 (Heart Transplant); and DRG 480 (Liver Transplant)). Because these costs are paid separately from the prospective payment rate, it is necessary to make an adjustment to prevent the relative weights for these DRGs from including the effect of the acquisition costs. Therefore, we subtracted the acquisition charges from the total charges on each transplant bill that showed acquisition charges prior to computing the average charge for the DRG and prior to eliminating statistical outliers.

When we recalibrated the DRG weights for previous years, we set a threshold of 10 cases as the minimum number of cases required to compute a reasonable weight. In the FY 1991 MedPAR data used to establish the FY 1993 weights, there were 37 DRGs that contained fewer than 10 cases. We proposed to use that same case threshold in recalibrating the DRG weights for FY 1994. Using the final FY 1992 MedPAR data set, there are 35 DRGs that contain fewer than 10 cases. We computed the weight for the 35 low-volume DRGs by adjusting the original weights of these DRGs by the percentage change in the average weight of the cases in the remaining DRGs.

The weights developed according to the methodology described above, using the DRG classification changes, result in an average case weight that is different from the average case weight before recalibration. Therefore, the new weights are normalized by an adjustment factor, so that the average case weight after recalibration is equal to the average case weight prior to recalibration. This adjustment is intended to ensure that recalibration by itself neither increases nor decreases total payments under the prospective payment system.

Section 1886(d)(4)(C)(iii) of the Act requires that reclassification and recalibration changes beginning with FY 1991 be made in a manner that assures that the aggregate payments are neither greater than nor less than the aggregate payments that would have been made without the changes. Although normalization is intended to achieve this effect, equating the average case weight after recalibration to the average case weight before recalibration does not necessarily achieve budget neutrality with respect to aggregate payments to hospitals because payment to hospitals is affected by factors other than average case weight. Therefore, as discussed in section II.A.4.b. of the Addendum to this final rule, we are making a budget neutrality adjustment to assure the requirement of section 1886(d)(4)(C)(iii) of the Act is met.

III. Changes to Hospital Labor Market Areas and the Wage Index

A. Background

Under the Medicare prospective payment system, different payment rates are calculated for hospitals located in rural, urban, and large urban areas. For purposes of the standardized payment amount, section 1886(d)(2)(D) of the Social Security Act requires that we use Metropolitan Statistical Areas (MSAs) as defined by the Office of Management and Budget (OMB) to determine whether hospitals are located in rural, urban or large urban areas. In New England, we use New England County Metropolitan Areas (NECMAs) in making this determination.

Section 1886(d)(3)(E) of the Act requires that, as part of the methodology for determining prospective payments to hospitals, the Secretary shall adjust the urban and rural standardized amounts "for area differences in hospital wage levels by a factor (established by the Secretary) reflecting the relative hospital wage level in the geographic area of the hospital compared to the national average hospital wage level." In accordance with the broad discretion conferred by this provision, we have defined hospital labor market areas based on the definitions of MSAs issued by OMB. Additionally, as discussed below, we adjust the wage index to take into account the geographic reclassification of hospitals in accordance with sections 1886(d)(8)(B) and 1886(d)(10) of the Act.

For determining prospective payments to hospitals in FY 1993, the wage index is based on a HCFA survey of hospital wage and salary data for all hospitals subject to the prospective payment system with cost reporting periods ending in calendar year 1988. The FY 1993 wage index includes wages and salaries paid by a hospital, home office salaries, and fringe benefits. In addition, the FY 1993 wage index excludes salaries associated with non-hospital type services, such as skilled nursing facility or home health agency services.

In the May 26, 1993 proposed rule, we proposed several changes in the hospital wage index to determine the prospective payments to hospitals in FY 1994. Most significantly, we proposed to implement new labor market areas based on OMB's revised MSA definitions pursuant to our broad discretion under section 1886(d)(3)(E) of the Act to define labor market areas and implementing regulations at § 412.63 (b) and (p). In addition, we are using updated wage data to construct the wage index, as required by section 1886(d)(3)(E) of the Act. The changes we proposed to the labor market areas and to the hospital wage data are discussed in detail below.

B. Revised Labor Market Areas

1. Implementation of New MSA Definitions Based on 1990 Census Data

In the September 1, 1992 final rule, we stated that we planned to implement in FY 1994 the revised MSA definitions based on 1990 census data (57 FR 39768). On December 28, 1992, OMB announced revised MSAs. In accordance with § 412.63(b)(4), which provides that we adopt any revisions to the MSAs for payment purposes on the October 1 following the effective date of the change, we plan to adopt the revised MSAs on October 1, 1993. We indicated in the proposed rule that if OMB announced further revisions in the MSA definitions by June 30, 1993, we would reflect these revisions in the final rule. OMB announced changes on June 30, 1993, and we have adopted those changes in this final rule. Table 4a of the wage index tables in the addendum to this final rule lists the MSAs and

their member counties as set forth in OMB's announcement.

Comment: We received several comments concerning OMB's June 30, 1993 publication of revisions to the MSA definitions that were published on December 28, 1992. Specifically, some commenters objected to OMB's decision to revise the boundaries of the New York MSA to exclude certain New York, New Jersey, and Pennsylvania counties that were included in the New York MSA in the December 28, 1992 publication. The commenters believed that OMB's original decision to group all of the counties together was correct based on statistical analysis and census data. Other commenters urged us to adopt the revised MSA definitions for New York.

We also received comments about the appropriateness of the expansion of the Boston NECMA. One commenter supported the change as more reflective of the labor market area, while another commenter asserted that the change inappropriately expands the Boston NECMA and should not be implemented. Other commenters stated that any changes to the MSA definitions that adversely affect the wage index for hospitals in an area should not be adopted.

Response: As discussed above, section 1886(d)(2)(D) of the Act specifically requires the use of MSA definitions as established by OMB. Given this requirement, we believe we have an obligation to adopt the latest definitions established by OMB for standardized amount purposes. The provision under section 1886(d)(8)(A) of the Act with respect to transition payments for hospitals that lose their urban designation as a result of changes in the MSA definitions clearly indicates congressional expectation that we would adopt any revisions announced by OMB. In addition, pursuant to our broad discretion under section 1886(d)(3)(E) of the Act, we currently define labor market areas for purposes of the wage index on the basis of MSAs. Thus, until alternative labor market areas are established, we believe the MSA definitions should be applied consistently for purposes of both the standardized amount and labor market area designations. Therefore, effective October 1, 1993, we are implementing the revised MSA designations as announced by OMB on June 30, 1993.

2. Reclassification Issues Related to New MSAs

The new MSA definitions have considerable effect on geographic redesignations of hospitals under both sections 1886(d)(8)(B) and 1886(d)(10) of the Act. Section 1886(d)(8)(B) of the Act provides that, if certain conditions are met, the Secretary treats a hospital located in a rural county adjacent to one or more urban areas as being located in the urban area to which the greatest number of workers in the county commute, if the rural county would otherwise be considered part of an urban area under the standards for designating MSAs (and NECMAs) published in the **Federal Register** on January 3, 1980 (45 FR 956). Section 1886(d)(10) of the Act provided for the creation of the Medicare Geographic Classification Review Board (MGCRB). Guidelines concerning the criteria and conditions for hospital reclassification are located at §§ 412.230 through 412.236. Under the guidelines, hospitals may be reclassified individually for purposes of their wage index, standardized amount, or both. Hospitals may also be reclassified as a group for purposes of both the wage index and the standardized amount, but not solely for one of these measures. Section 1886(d)(8)(D) of the Act requires that additional payments to redesignated hospitals be financed through a budget neutrality adjustment to the urban standardized amounts.

As previously noted, section 1886(d)(3)(E) of the Act directs the Secretary to make an adjustment to the prospective payment system standardized amounts "by a factor (established by the Secretary) reflecting the relative hospital wage level in the geographic area of the hospital compared to the national average hospital wage level." Thus, we calculate a hospital wage index based on hospital wages in each hospital's labor market area. Pursuant to the broad discretion conferred by the statute, we have defined hospital labor market areas on the basis of MSAs since the inception of the prospective payment system. Sections 1886(d)(2)(D) and (d)(3)(D) of the Act require us to use MSAs for purposes of the standardized amount.

In the May 26, 1993 proposed rule, we proposed to implement the new MSA designations announced by the Office of Management and Budget (OMB) on December 28, 1992, for purposes of applying the wage index and standardized amounts for FY 1994. As noted above, this final rule reflects the latest MSA revisions announced by OMB on June 30, 1993. Examples of OMB's changes to the MSAs are:

(1) Additions or deletions of counties in existing MSAs;

(2) Newly established or eliminated MSAs;

(3) Mergers of existing MSAs; and

(4) MSA title changes (which do not affect Medicare payments).

Because the MGCRB decisions that would be effective in FY 1994 are based on the old MSA definitions, it was necessary to reconcile the implementation of the new MSA designations for FY 1994 with the MGCRB reclassification decisions for FY 1994. Under the revised MSA definitions, a number of reclassified hospitals are located in counties whose geographic assignments have now changed, and other hospitals have been reclassified to areas that have different boundaries under the new MSA definitions. For example, a hospital that was reclassified to another area by the MGCRB may also have been added to that area under the new MSA designations. In the proposed rule, we explained our proposed method for effectuating MGCRB decisions for FY 1994 in light of changes to the labor market areas (58 FR 30233).

We proposed to assign hospitals to the revised labor market area that includes most or all of the counties that comprise the labor market area to which the hospital was reclassified by the MGCRB based on current labor market area definitions. We proposed to modify the effect of the MGCRB's decisions only in those cases where the new MSA designations would preclude our implementing, in a rational manner, reclassification decisions based on the current MSA assignments. No commenters objected to our proposals in this area. The only comment that we received stated that our proposals were fair and reasonable. Therefore, as discussed below, we are adopting the proposed methodology for reconciling the MGCRB decisions for FY 1994 with the new MSA definitions.

Where MSA changes have occurred, we are applying the new MSA definitions to reclassified hospitals as follows:

- At the time of the proposed rule, we announced that 115 hospitals that had been reclassified by the MGCRB are located in counties that have been incorporated, under the new MSAs, into the area to which the hospitals were approved for reclassification. As a result of the new MSA definitions, hospitals in this situation will already be located in the area to which they were granted reclassification. Thus, under sections 1886(d)(8)(C) and (D) of the Act, the reclassifications granted by the MGCRB to these hospitals have no effect on the wage index and the budget neutrality adjustment required under section 1886(d)(8)(D) of the Act. For example, some hospitals located in the former Aurora-Elgin, Illinois MSA were granted

reclassification to the Chicago, Illinois MSA. Since the Aurora-Elgin, Illinois MSA has been incorporated into the Chicago, Illinois MSA under the new definitions, under our proposal, these hospitals would be paid by virtue of this change based on the payment rates applicable to the Chicago MSA and their wage data would be reflected in the wage index for the Chicago MSA.

We are implementing this policy as proposed. Based on the final reclassifications and recent revisions to the MSA designations, there are 77 affected hospitals.

• If a county is incorporated into a new area under the revised MSA definitions and a hospital in that county has been granted reclassification into a different area by application to the MGCRB, we proposed to implement the reclassifications as approved in the final administrative decision of the MGCRB or the Administrator. As of March 31, 1993, we had identified 25 reclassified hospitals for which this situation occurred. In these situations, we do not believe it would be appropriate to modify on our own the reclassifications requested by the hospital and approved by the MGCRB. However, under § 412.273(a)(2), if a hospital concluded that such reclassification would not be advantageous in light of the new MSA definitions, it had the opportunity to withdraw its reclassification application within 45 days from the publication of the proposed rule. Unless we received a withdrawal in these cases, we are implementing these reclassifications in this final rule with comment period.

• If a hospital was reclassified to an MSA based on its location in a county that is adjacent to a county that was formerly part of an MSA but has now been deleted from the MSA definition, we proposed to implement such reclassifications for FY 1994. We are implementing this policy in this final rule with comment period. The decisions in these cases were appropriately determined based on the current MSA definitions that the MGCRB was required to use to decide applications for FY 1994. We note that the MGCRB will use the new MSA definitions for purposes of adjudicating requests for FY 1995 reclassifications. Thus, these hospitals may no longer meet the proximity and adjacency guidelines at § 412.230(a) for future application periods.

• In cases where MSAs have merged or there is a title change, we proposed that reclassifications to those areas be implemented based on the boundaries of the revised MSAs. For example, the Odessa, Texas MSA and the Midland, Texas MSA have now been merged under the revised MSA definitions to form the Odessa-Midland, Texas MSA. Therefore, in this final rule, all hospitals reclassified to either the current Odessa MSA or the Midland MSA, have been assigned to the Odessa-Midland, Texas MSA for purposes of FY 1994 reclassifications.

• Based on the new MSA definitions, 17 of the 39 counties whose hospitals were deemed urban under section 1886(d)(8)(B) of the Act have now been designated part of MSAs. The 23 hospitals located in these counties will no longer be treated as reclassified hospitals for purposes of the wage index and the budget neutrality adjustment required under section 1886(d)(8)(D) of the Act. In FY 1994, 29 hospitals in 22 rural counties will continue to be deemed urban under section 1886(d)(8)(B) of the Act.

3. Technical Changes to the MGCRB Guidelines

Section 1886(d)(10)(D)(i)(II) of the Act requires the Secretary to publish guidelines "for determining whether the county in which the hospital is located should be treated as being a part of a particular Metropolitan Statistical Area." The statute does not specify the particular criteria to be used, but instead confers broad authority on the Secretary in establishing guidelines. Currently, § 412.232(b) allows hospital groups to seek reclassification based on MSA/NECMA standards published in the **Federal Register** on January 3, 1980 (applying 1980 census data) or the standards published on March 30, 1990 (applying 1990 census data). Pursuant to our authority under the statute, we proposed to update the guidelines by revising § 412.232(b) to specify that the standards published on March 30, 1990 and the census data from 1990 or later should be used.

Also, current guidelines with respect to wage index reclassifications based on an occupational-mix adjustment provide for the use of occupational-mix data from either the American Hospital Association survey or the Bureau of Labor Statistics survey. The Bureau of Labor Statistics discontinued its occupational-mix data survey after 1988. Since we are now using FY 1990 wage data to construct the wage index, the latest occupational mix data available from the Bureau of Labor Statistics are no longer consistent with the data reflected in the wage index. Therefore, we proposed to revise §§ 412.230(e)(2)(ii)(B) and 412.232(d)(2)(ii)(B) to eliminate this data source from the occupational mix guidelines. No comments were received on this issue, and we are implementing these changes in this final rule.

C. Updating the Wage Index Data

Section 1886(d)(3)(E) of the Act requires that the wage index be updated annually beginning October 1, 1993. This section further provides that the Secretary base the update on a survey of the wages and wage-related costs of short-term acute care hospitals in the United States. To the extent feasible, the survey should measure the earnings and paid hours of employment by occupational category and should exclude data with respect to the wages and wage-related costs incurred in furnishing skilled nursing facility services.

For determining prospective payments to hospitals in FY 1993, the wage index is based on a HCFA survey of hospital wage and salary data for all hospitals subject to the prospective payment system with cost reporting periods ending in calendar year 1988. In accordance with the statutory requirement to update the wage data annually beginning October 1, 1993, the FY 1994 wage index is based on data for hospital cost reporting periods beginning on or after October 1, 1989 and before October 1, 1990 (FY 1990).

D. Revisions to the Wage Index

For determining prospective payments to hospitals in FY 1994, effective for hospital discharges occurring on or after October 1, 1993 and before October 1, 1994, the wage index is based upon the data collected from the Medicare cost report (worksheet S–3, Part II) submitted by hospitals for cost reporting periods beginning in FY 1990.

All of the categories of data collected from worksheet S–3, Part II are included in the wage index computation. Therefore, the FY 1994 wage index reflects the following:

• Total short-term acute care hospital salaries and hours.

• Home office cost and hours.

• Fringe benefits associated with hospital and home office salaries.

• Contract labor cost and hours.

• The exclusion of salaries and hours for skilled nursing facility or other subprovider components that are not subject to the prospective payment system.

The inclusion of contract labor represents a change from the current wage index. At the request of the hospital industry, we also considered incorporating an allocation of overhead salaries and hours to the excluded components of the hospital.

Following is a discussion of our analysis of the wage data used to construct the wage index.

1. Verification of Wage Data From the Medicare Cost Report

The FY 1990 wage data was obtained from Worksheet S–3, Part II, of the HCFA–2552 submitted by short-term acute care hospitals. The wage data are reported electronically to HCFA through the Hospital Cost Report Information System (HCRIS). Because the initial data reported by hospitals on the cost report contained substantial deficiencies (including missing data items such as excluded hours and total paid hours), we initiated an intensive review of the wage data and made numerous edits to ensure optimal quality and accuracy. Medicare intermediaries were instructed to transmit any revisions through HCRIS by early January 1993. In the proposed rule, we discussed the review of the cost report data in detail (58 FR 30236).

The wage file used to construct the proposed wage index included data obtained in late January 1993 from the HCRIS data base and subsequent changes we received from intermediaries through March 15, 1993. To allow hospitals time to review the wage data used to construct the final hospital wage index, we forwarded to each hospital on April 16, 1993, a listing summarizing the FY 1990 wage data reported for the hospital. We advised hospitals to submit corrections to their intermediaries in time to allow for review and verification of the data before the development of the final wage index. We instructed the intermediaries to complete their verification of questionable data elements and to transmit any changes to the wage data, via HCRIS, no later than June 15, 1993. This deadline was necessary to allow sufficient time to download and edit the data, so that the final wage index calculation could be completed for development of the final prospective payment rates.

The final wage index reflects all wage data corrections transmitted by the intermediaries via HCRIS on or before June 15, 1993.

We note that, as discussed in the FY 1993 prospective payment system final rule (57 FR 39765), we eliminated midyear wage data corrections effective with requests for correction received on or after October 1, 1992. Accordingly, we will not make any midyear changes to the wage index values in FY 1994. We are revising § 412.63(p) to reflect the expiration of midyear wage index corrections.

Comment: We received numerous comments concerning the wage data collection process. The commenters believe that there were still many errors in the FY 1990 wage data due to problems in communications between the hospitals, the fiscal intermediaries, and HCFA. Commenters were concerned that revised data submitted to intermediaries were not reflected in the proposed rule and would not be reflected in the wage index for the final rule. Some commenters stated that the fiscal intermediaries had difficulties with the Medicare Cost Report (MCR) codes used to transmit data through HCRIS. Some claimed that the hospitals have not had enough time to fully examine their 1990 wage data. A number of commenters indicated that we should allow for midyear corrections, and two stated that we should apply them retroactively.

Response: We have taken significant steps to allow hospitals to reexamine the accuracy of their reported FY 1990 data. However, we believe that the ultimate responsibility for the accuracy of the wage data reported on the Medicare cost report rests with the hospitals. Hospitals are required to complete the worksheet S–3, Part II along with the rest of the cost report and to attest to its accuracy at the time the cost report is filed. The cost report is signed by an Officer or Administrator of the hospital certifying that the cost report is "a true, *correct* and complete statement prepared from the books and records of the provider in accordance with applicable instructions * * *." (Emphasis added.)

In addition, with respect to the FY 1990 wage data, hospitals have had numerous opportunities and ample time to report their data correctly. As early as the FY 1993 final rule, published on September 1, 1992, hospitals were put on notice that the FY 1990 cost report data would be used to update the wage index for FY 1994 (57 FR 39779). In November 1992 we sent each intermediary a listing of hospitals that had reported excluded wages and asked them to obtain certain additional overhead data. As part of that process, we asked intermediaries to resolve problems with any aberrant data. In December 1992 and January 1993, the fiscal intermediaries performed desk reviews for each hospital to ensure the reasonableness of the data. Revisions to the data resulting from these reviews were sent to HCFA by early January 1993.

In February 1993, we reviewed the data received and again asked intermediaries to review and, where necessary, correct data outside our range edits. So that hospitals would have another opportunity to review their wage data, rather than wait for the proposed rule to be published we sent each hospital a copy of the data for their respective hospital. These letters were addressed to the hospital administrator. A similar mailing was sent to each fiscal intermediary in order to facilitate the handling of requests for data corrections from the hospitals they service.

However, some hospitals indicated that they did not receive the letter or that it was misdirected and was not reviewed timely. To the extent that we were advised of these situations on a timely basis, we made every effort to ensure that the hospitals received their wage data for review. However, we believe that each hospital is responsible for the accuracy of its reported data when the cost report is filed. As such, it is necessary for each hospital to carefully complete the Worksheet S–3, Part II, when filing its Medicare cost report.

With respect to commenters' concerns that revised data submitted by hospitals to their fiscal intermediaries were not reflected in the proposed rule and would perhaps not be reflected in the final rule, we note that corrections to the data submitted to the HCRIS system after mid-March 1993 through development of the final wage index were not included in the proposed rule. However, any change submitted to the HCRIS system by June 15, 1993 has been utilized in the development of the final wage tables published in tables 4a through 4e of section V of the addendum to this final rule with comment. In cases where an intermediary submitted revised cost report data to HCRIS with an incorrect MCR code, we have taken steps, through direct contacts with the fiscal intermediaries, to correct this situation to ensure that all corrections submitted by intermediaries by June 15 are reflected in the final wage index. We are also including clarifying instructions in the desk review program to ensure that such problems do not occur in the future.

We believe that hospitals have been given ample time and opportunity to ensure the accuracy of their wage data. Moreover, one of the reasons for eliminating midyear corrections was to implement a system where hospital wage index values would not change unexpectedly during the year, thus allowing hospitals to operate efficiently throughout the fiscal year based on pre-established payment rates as published in this final rule. As such, we do not believe that the midyear correction of wage data should continue, especially in light of the problems related to geographic reclassification with respect

to the implementation of midyear corrections that were discussed in the September 1, 1992 final rule (57 FR 39765). Therefore, we are not allowing hospitals another opportunity to correct the 1990 wage data.

Comment: Commenters requested that we allow hospitals further opportunity to revise their wage data if the update to the prospective payment system rates is delayed to January 1, 1994.

Response: As indicated above, we believe hospitals have had more than sufficient time to correct their data. Moreover, Public Law 103-66 did not provide for a delay in the update to the prospective payment system rates. Therefore, no further revisions to the FY 1990 wage data will be accepted for purposes of the FY 1994 wage index.

Comment: Commenters suggested that each year HCFA send hospitals a preliminary listing of the wage data for all the hospitals in their respective labor market area, so they could check for any obvious discrepancies in the wage index data of other hospitals in their area. This would also enable hospitals to attempt to ensure the accuracy of the data for other hospitals in their labor market areas whose wages have the most impact on their particular wage index value.

Response: As indicated above, we believe that an annual mailing of the wage data to each hospital is unnecessary. Thus, we do not plan to repeat the mailing effort of April 1993. Each hospital is responsible for the accuracy of its own data and should complete its Medicare cost report in conformance with reporting instructions. However, we note that once the proposed wage index is published for each fiscal year, the wage data will be available to interested parties upon request. In addition, the cost report data submitted through HCRIS are available to hospitals on an ongoing basis. Hospitals concerned about area-wide problems are free to communicate with one another to identify errors. We note that we will use FY 1991 cost report data to update the wage index for FY 1995.

2. Patient Care-Related Contract Services

As part of Worksheet S–3, Part II, hospitals submitted data concerning labor-related payments and hours attributable to direct patient care-related contract services. Hospitals were instructed to exclude non-patient care contract services such as management and housekeeping services, nonlabor-related expenses such as payments for equipment and supplies, and any contract services for which labor-related payments or hours could not be accurately determined.

The hospital industry has repeatedly advocated including contract labor in the wage index in order to address the increasing use of contract services. As discussed in the May 9, 1990 proposed rule (55 FR 19443), data collected for contract services on the 1988 wage survey were unreliable for a number of reasons, including inaccurate and incomplete reporting of data. Thus, we were unable to include contract labor in subsequent wage indexes based on the 1988 wage survey data. For the FY 1990 cost report data, we clarified the instructions for reporting contract labor and developed additional edits for contract labor that were reviewed as part of the intermediary's desk review process. As discussed in the proposed rule (58 FR 30236), our analysis of contract wage data reported on the FY 1990 cost report indicates that the reported salaries and hours appear reasonable. Therefore, we proposed to include contract labor wages and hours in the wage index for FY 1994.

We attempted to verify the accuracy of contract data reported for hospitals having a contract labor average hourly wage exceeding $80.00 per hour, which represents the mean hourly wage plus 3 standard deviations. This is our standard method to identify and remove statistical outliers. For purposes of the wage final index, contract labor data for any hospital whose inflated contract labor average hourly wage exceeded $80.00 per hour, or was less than $5.00 per hour, were presumed to be unreasonable and were eliminated from the wage index computation. However, the fiscal intermediaries reexamined contract labor data costs in excess of $80.00 per hour, and the data were included if determined to be correct based on verified documentation.

These edits to the contract labor wage data resulted in the elimination of data for five hospitals with high contract labor average hourly wages and four hospitals with low contract labor average hourly wages. In each case where a hospital's contract labor average hourly wage did not meet our standards and was not substantiated as correct by the intermediary, we recalculated the hospital's average hourly wage exclusive of contract labor. We note that if a hospital's data were revised and no longer fell outside our limits, or the fiscal intermediary notified our office that the contract labor cost and hours have been verified and supported by documentation, then the final wage index reflects the contract data even though the data were not included in the proposed wage index.

In most labor market areas, the inclusion of contract labor in the wage index computation has a small effect on the average hourly wage. However, now that we have reasonably complete data, we believe including contract labor would more accurately and fairly reflect wage levels across hospitals and MSAs. Accordingly, after considering the public comments, we have included contract labor for direct patient care services in the final wage index for FY 1994.

Comment: Commenters indicated that they supported our proposal that contract labor be included in the computation of the wage index. However, some commenters questioned the accuracy and validity of the contract labor data. One commenter suggested that a special audit or review be done if the contract labor hours were greater than 5 percent of the total hours. The commenter stated that since hours associated with the provision of contract services seem to vary greatly, these measures were necessary to ensure the accuracy of the data.

Response: We believe that the edits we have applied to the contract labor costs are sufficient to ensure accuracy of the reported contract labor data. The current edits applied to contract labor costs are designed to eliminate aberrant or unverified contract labor data from the wage index. One edit we performed was to apply the mean plus three standard deviations for the reported contract labor hourly wage. For any hospital whose contract labor hourly rate exceeded these parameters, we contacted the appropriate intermediary in order to verify the accuracy of the reported data. If the intermediary could not obtain appropriate justification from the hospital as to why these costs were aberrant, the contract dollars and hours were eliminated from the calculation of the final wage index.

We identified 19 hospitals that had a contract labor average hourly wage above $80.00. As a result of this edit, the data for two hospitals were revised to reflect a correct contract labor rate, and included in the wage index. The contract labor data for five hospitals were eliminated because the data were not documented or reported correctly. The remaining 12 hospitals provided the intermediaries with adequate documentation to substantiate their reporting of a high contract labor rate and were included in the wage index.

We also eliminated contract labor data for four hospitals that reported inordinately low average hourly contract labor costs (that is, below $5.00 per hour). This is a change from the proposed wage index wherein we

excluded any contract labor costs below $3.35 per hour. After further consideration, we decided that given the fact that contract services are generally obtained through personnel agencies that charge a premium, we believe the $5.00 minimum standard is more appropriate than $3.35, which represented the minimum wage allowed by law.

We have not instituted any special audit or review in instances where contract labor hours exceeded 5 percent of total hours. We believe that it is reasonable to expect significant variations in the percent of contract labor costs to total salaries. The proportion of contract services used by individual hospitals could be affected by a number of circumstances, such as hospital size, range of services, and extent of personnel shortages in the area. We note that for hospitals that reported contract labor costs the average ratio of contract costs to total salaries was approximately 6 percent. We will, however, consider expanding our edits in the future to evaluate any cases with extremely high proportions (over 30 percent) of contract labor costs.

Comment: Several commenters suggested that we include Part A physician contract services as part of the contract labor definition. The commenters indicated that Part A physician services include some patient care related services and would therefore meet our definition, which limits includable contract services to only those associated with hands-on patient care. Other commenters were concerned that failure to include Part A physician contract services in States where hospitals are not allowed to directly hire physicians and must obtain their services on a contractual basis eliminates the hospitals' Part A services from the wage data. Conversely, a hospital that can directly hire a physician will have its physicians' salaries included in the wage index. These commenters asserted that since the average hourly wage for physicians are relatively high, there exists a definite disadvantage for these five States. Another commenter stated that the cost reporting instructions were clarified to specifically exclude Part B physicians services but not Part A physicians services.

Response: Under section 1887 of the Act, "professional medical services" (services directly related to patient care) are reimbursed under Part B, and "professional services that are rendered for the general benefit to patients in a hospital" are reimbursed under Part A. If physicians services are directly related to patient care, then those services would be billable under Part B. For purposes of the wage index, the cost report instructions specifically excluded Part B physicians services because these services are in fact directly related to patient care but they are otherwise reimbursable under Medicare. Part A physicians services were not specifically referenced in the cost reporting instructions because these services, unlike Part B physicians services, are not directly related to patient care, and therefore no clarification should have been necessary for purposes of reporting contract labor costs. It would not be appropriate to make exceptions to the definition of contract services prescribed in the cost reporting instructions for one type of contract service as opposed to any other contract service that is not directly related to hands-on patient care.

In those States where a hospital is restricted from directly hiring a physician, we believe that the hospital could consider using other administrative personnel to perform some of the administrative functions that physicians currently perform. This would enable the hospital to include the salaries paid to administrative personnel in the wage index computation.

Comment: We received two comments suggesting that we include management service contracts in the wage index, since we include salaries for home office personnel who perform similar services at a hospital. These commenters believe the definition for contract labor should be expanded to include these contract services.

Response: As stated above, the contract labor definition is limited to those services directly related to hands-on patient care. This definition was adopted to address the main concern expressed by hospitals with respect to the inclusion of contract labor in the wage index, that is, that many hospitals have problems hiring nurses in areas experiencing nursing shortages and must rely on contract labor sources. Thus, a hospital's decision to use contracted services in these situations is often driven by the need to overcome these staffing shortages. This is generally not the case with management contracts.

The costs of contract labor are generally higher than the cost of noncontract labor for the same services, and thus may not accurately reflect relative hospital wage rates across labor market areas. However, the situation described above illustrates why it may be appropriate to include the costs of contract services directly related to patient care. In accordance with the FY 1990 cost reporting instructions, the data used to develop the updated wage index do not encompass management services and therefore management costs are not included in the FY 1994 wage index computation. Management contracts encompass a wide range of services including legal services, personnel administration, and accounting or auditing services. Our concern is the difficulty in accurately removing the costs and hours for services such as legal and accounting from total management contracts. We do not believe it would be appropriate to include such contract services for some hospitals and not for others. A national data collection would be required before contract management services can be included in the wage index. However, we will reconsider this issue for future wage indexes as it may be appropriate to recognize certain management contracts where hospital administrators, CEOs and/or CFOs are contract employees, especially in small, rural hospitals that have difficulty recruiting top management personnel. We will evaluate the appropriateness and feasibility of including such contract management services in future wage data collections.

3. Allocation of General Service Salaries to Areas Excluded from Wage Index

The current wage index is constructed using data only for areas of the hospital that are related to the provision of hospital care to inpatients. Thus, we exclude the direct wages and hours associated with certain sub-provider components of the hospital, such as skilled nursing facilities and home health agencies, from the wage survey. The cost reporting form used to collect the FY 1990 wage data also includes within the definition of excluded areas rehabilitation and psychiatric distinct part units of the hospital that are excluded from the prospective payment system.

As stated in the proposed rule, we have received several suggestions from hospital representatives that, in addition to excluding the direct salaries and hours for sub-provider components of the hospital, HCFA should also exclude the general service, or overhead, wages and hours that are associated with these areas. Currently, for example, we include all of the wage costs associated with housekeeping in the wage index data, even if a facility has excluded sub-provider components that receive housekeeping services. In response to these suggestions, we initiated a special data collection to obtain the hours associated with workers in the general service areas of those hospitals that

reported excluded salaries and hours. We received general service hour data for 3,811 of the 5,436 hospitals for which we have wage data.

We analyzed this special survey data in conjunction with the wage data from the cost report to determine whether we could reasonably allocate the overhead wages and hours to the excluded areas of the hospital. In the proposed rule, we discussed this analysis in detail (58 FR 30237). For several reasons, we concluded that it would not be appropriate to use the overhead data collected in computing the wage index. These reasons included the large number of hospitals removed due to the edits, the large number of hospitals with large swings in their average hourly wages, and the large proportion of hospitals whose average hourly wages would decrease as a result of the allocation rather than increase. As a result, in the proposed rule we did not employ the allocation of general service salaries and hours to the excluded areas of hospitals in constructing the proposed FY 1994 wage index.

We solicited public comment on this issue, in particular, comments concerning alternative methods that might produce a more accurate and uniform allocation method and at the same time impose little or no additional reporting burden on the hospital industry. We indicated that under any acceptable allocation method, we would require that the method be used by all hospitals with excluded areas and that the intermediary be able to verify the accuracy of the reported data.

Comment: We received numerous comments regarding our decision not to allocate hospital overhead wages and hours to excluded areas of the hospital in the calculation of the proposed wage index. Most commenters believe that our decision not to allocate the overhead hours and wages to the excluded areas of the hospital is contrary to the statute, arguing that section 1886(d)(3)(E) of the Social Security Act requires the exclusion of salaries applicable to skilled nursing facilities. Other commenters believe that the basis of our decision not to exclude these hours and salaries, that is, that the data is of insufficient quality to ensure its accuracy, is inadequate. The commenters assert that the allocation should have been performed regardless of the data quality problem. Several commenters stated that they altered their cost report forms to include all general service hours and salaries, including those they had previously assigned to the excluded areas, based on a promise by HCFA that such data would be excluded in the wage index calculation. Other commenters believe that problems in the overhead allocation indicate problems in the overall wage and hour reporting used in the wage index calculation. Many commenters oppose our decision because they believe that it unfairly disadvantages rural hospitals, which may have a larger proportion of their workers in excluded areas than do urban hospitals. One commenter believes that our decision not to exclude the allocated wages and hours will disadvantage rural hospitals applying for reclassification for wage index purposes to the MGCRB, since hospitals must compare their average hourly wage to the average hourly wage for all hospitals in their current labor market area.

Response: Section 1886(d)(3)(E) of the Act specifies that, "*to the extent determined feasible by the Secretary,* such survey shall * * * exclude data with respect to the wages and wage-related costs incurred in furnishing skilled nursing facility services" (emphasis added). In the proposed rule, we discussed in detail our analysis of the data and our conclusion that it is not feasible to allocate overhead wages and hours to the excluded areas of the hospital (58 FR 30237).

In analyzing the proposed exclusion, we found that, even after data edits eliminated the allocations for 177 hospitals with questionable data, approximately two-thirds (2,412) of the remaining 3,634 hospitals had average hourly wages that were lower when the allocation was performed than when it was not. If the allocation were accurate, this would mean that, for the majority of hospitals with excluded areas, the average hourly wage for the overhead areas (such as laundry and housekeeping) is higher than that for patient care areas in the hospital (such as nursing). We do not believe that this could be the case for such a large number of hospitals, and we therefore concluded that the data collected regarding overhead hours was inaccurate. Because of the large number of hospitals removed through the edit process, the large number of hospitals with large swings in their average hourly wages, and the large proportion of hospitals whose average hourly wage would decrease rather than increase as a result of performing the allocation, we continue to believe it would be inappropriate to employ the allocation of general service salaries and hours to the excluded areas of hospitals in constructing the FY 1994 wage index.

We disagree with commenters who question the entire wage index calculation on the basis of the problems in the overhead allocation. The overhead hours were collected by use of a special hospital survey that was conducted well after the Medicare cost report was filed. As a result, the hours were not subject to a departmental allocation, as was the case for the overhead wages. Since hospitals were required to retroactively determine the overhead hours corresponding to the salaries reported on the cost report, it was more difficult to ensure that the hours reported by the hospitals in the survey would match the wages reported on the cost report, although we had hoped that the hours would be accurate.

With regard to the alteration of the cost reports due to any perceived promise by HCFA that the overhead wages and hours attributable to the excluded areas of the hospital would be removed from the wage index calculation, we note that hospitals are required to include all overhead salaries and hours in their cost reporting for the overhead cost centers, and not just those salaries and hours attributable to the acute care area of the hospital. We note that these hospitals had allocated a select portion of their overhead salaries to areas excluded from the wage index through accounting reclassifications, so that these salaries did not appear on Worksheet A, column 1 (which was used to determine salaries for the wage survey on Worksheet S–3), but were returned to the overhead areas in order to perform the step down of costs on Worksheet B, part I. As such, we believe that the changes made to these cost reports by the providers should have been made in any case and are irrelevant to the discussion of the allocation methodology.

We note that, although the overhead allocation would reduce the wage index values for a smaller proportion of rural areas than urban areas, the allocation would still reduce the wage index value for several rural areas. In this regard, we note that many of the commenters who supported the allocation are located in rural Nebraska, an area whose average hourly wage would decrease as a result of the allocation as currently calculated. Finally, we emphasize that our decision not to perform the overhead allocation was made in order to calculate the most accurate wage index possible.

We do not believe that this decision will have any consistent impact on hospitals applying for wage index reclassification. The effect on any applicant hospital, the labor market area in which it is currently located, or the labor market area to which the hospital is applying will differ across hospitals and labor market areas. Moreover, we believe that our decisions regarding the appropriate structure of the wage index

should be directed toward establishing an accurate reflection of wage variation across different labor market areas. As such, we believe our decision with respect to the overhead allocation is consistent with the goals of the reclassification process, because the allocation would not result in a more accurate wage comparison under either § 412.230(e)(1) (iii) or (iv).

Comment: Some commenters believe that the overhead allocation could be performed by allowing hospitals with excluded areas to directly allocate these salaries to the excluded areas. These commenters advocate various methods, including altering the reporting on Worksheet A (on which providers report their direct costs, including salary costs) and adding a stepdown procedure to Worksheet S–3, to allocate overhead hours and salaries to all of the hospital's cost centers.

Response: We believe that the difficulties we experienced with the overhead allocation arose from incorrect reporting of overhead hours, rather than the allocation methodology itself. For the FY 1994 wage index, the FY 1990 cost reports included data for overhead salaries but not overhead hours; we collected data for overhead hours by conducting a special survey in November 1992. In this special data collection we conducted for the FY 1990 cost reports, the overhead hours were determined retroactively. However, the FY 1992 cost report allows for the direct reporting of both overhead salaries and overhead hours on the Worksheet S–3, and we hope that this will allow an accurate allocation. We believe that more accurate reporting of hours will occur on the FY 1992 cost reports because the overhead salaries and hours will be determined at the same time.

Comment: A commenter believes that hospitals with a low ratio of excluded salaries to total salaries do not have an incentive to make sure that their overhead hour data are correct. As a result, the commenter believes that any hospital with a high ratio of excluded to total salaries should be allowed to perform the allocation. In addition, the commenter believes that the allocation should be at the election of the provider, so that providers whose average hourly wage after the allocation is lower than before the allocation could refuse the allocation.

Response: We believe it would be inappropriate to perform the allocation for some hospitals and not others. We disagree with the commenter's suggestion that the allocation should be performed only in those situations where a provider's average hourly wage is increased as a result. The purpose of the allocation is to reflect more accurately the wages and salaries in the acute care area of the hospital by excluding salaries and hours associated with the excluded areas of the hospital. We believe it would be inconsistent to include some types of costs for some hospitals and not others.

E. Computation of the Wage Index

As noted in section III.C. above, we based the FY 1994 wage index on wage data reported on the FY 1990 cost report. The final wage index is comprised of data from 5,407 hospitals paid under the prospective payment system and short-term acute care hospitals in waiver States. The method used to compute the wage index is as follows:

Step 1—We gathered data from each of the non-Federal short-term acute care hospitals for which data were reported on the Worksheet S–3, Part II of the Medicare cost report for the hospital's cost reporting periods beginning on or after October 1, 1989, and before October 1, 1990. Each hospital was assigned to its appropriate urban or rural area based on the MSA definitions to be used in the prospective payment system in FY 1994 prior to any reclassifications under sections 1886(d)(8) or 1886(d)(10) of the Act. In addition, we included data from a few hospitals that had cost reporting periods beginning in September, 1989 and reported more than a 52-week cost reporting period. The data were included because no other data from these hospitals would be available for the cost reporting period described above, and particular labor market areas might be affected due to the omission of these hospitals. However, we generally describe this wage data as FY 1990 data.

Step 2—For each hospital, we subtracted the excluded salaries (that is, salaries attributable to skilled nursing facility and other sub-provider components) from gross hospital salaries to determine net hospital salaries. To the net hospital salaries, we added hospital contract labor costs, hospital fringe benefits, and any home office salaries and fringe benefits reported by the hospital to determine total salaries plus fringe benefits.

Step 3—For each hospital, we inflated or deflated, as appropriate, the total salaries plus fringe benefits resulting from Step 2 to a common period to determine total adjusted salaries. To make the wage inflation adjustment, we used the percentage change in average hourly earnings for each 30-day increment from October 14, 1989 through September 15, 1991, for hospital industry workers from S.I.C. 806, Bureau of Labor Statistics Employment and Earnings Bulletin. The annual inflation rate used was 5.6 percent. The inflation factors used to inflate the hospital's data were based on the midpoint of the cost reporting period as indicated below.

Midpoint of Cost Reporting Period

After	Before	Adjustment factor
10/14/89	11/15/89	1.075355
11/14/89	12/15/89	1.070483
12/14/89	01/15/90	1.065634
01/14/90	02/15/90	1.060806
02/14/90	03/15/90	1.056000
03/14/90	04/15/90	1.051216
04/14/90	05/15/90	1.046453
05/14/90	06/15/90	1.041713
06/14/90	07/15/90	1.036993
07/14/90	08/15/90	1.032295
08/14/90	09/15/90	1.027619
09/14/90	10/15/90	1.022963
10/14/90	11/15/90	1.018329
11/14/90	12/15/90	1.013715
12/14/90	01/15/91	1.009123
01/14/91	02/15/91	1.004551
02/14/91	03/15/91	1.000000
03/14/91	04/15/91	.995470
04/14/91	05/15/91	.990960
05/14/91	06/15/91	.986470
06/14/91	07/15/91	.982001
07/14/91	08/15/91	.977552
08/14/91	09/15/91	.973124

For example, the midpoint of a cost reporting period beginning January 1, 1990 and ending December 31, 1990 is June 30, 1990. An inflation adjustment factor of 1.036993 was applied to the hospital's wages. In addition, for the data for any cost reporting period that began in FY 1990 and covers a period of less than 360 days or greater than 370 days, we annualized the data to reflect a 1-year cost report. Annualization is accomplished by dividing the data by the number of days in the cost report and then multiplying the results by 365.

Step 4—For each hospital, we subtracted the reported excluded hours from the gross hospital hours to determine net hospital hours. We increased the net hours by the addition of any reported contract labor hours and home office hours to determine total hours.

Step 5—As part of our editing process, we eliminated the contract labor data for 9 hospitals that reported aberrant contract labor wages (over $80.00 or less than $5.00 per hour). However, if the intermediary indicated through the verification process that the contract labor salaries and hours had been reviewed and found to be accurate, we did not eliminate the data even if the average hourly wage exceeded the edit limit. In addition, we deleted data for 29 hospitals that are no longer participating

in the Medicare program, for which we lacked sufficient documentation to verify data that failed our edits. We retained the data for other hospitals that are no longer participating in the Medicare program because these hospitals contributed to the relative wage levels in their labor market areas during their FY 1990 cost reporting period. We note that no deletions were necessary for fringe benefit costs. In addition, no deletions to the home office data were required as all outstanding edits from the proposed wage data have been resolved.

Step 6—Within each urban or rural labor market area we added the total adjusted salaries plus fringe benefits obtained in Step 3 for all hospitals in that area to determine the total adjusted salaries plus fringe benefits for the labor market area.

Step 7—We divided the total adjusted salaries plus fringe benefits obtained in Step 6 by the sum of the total hours (from Step 4) for all hospitals in each labor market area to determine an average hourly wage for the area.

Step 8—We added the total adjusted salaries plus fringe benefits obtained in Step 3 for all hospitals in the nation and then divided the sum by the national sum of total hours from Step 4 to arrive at a national average hourly wage. Using the data as described above, the national average hourly wage is $17.2621.

Step 9—For each urban or rural labor market area, we calculated the hospital wage index value by dividing the area average hourly wage obtained in Step 7 by the national average hourly wage computed in Step 8.

Comment: Commenters suggested that we eliminate from the wage index computation hospitals that have terminated participation in the Medicare program. The commenters believe that wage data from terminated hospitals do not reflect the wages paid in a labor market area, since the terminated hospital may be in the process of closing its operations. In addition, the commenters stated that when the hospital closed, intermediaries would not be able to verify the data reported while the hospital was still operating.

Response: We have always maintained that any hospital that is in operation during the data collection period should be included in the database, since the hospital's data reflects conditions occurring in that labor market area during the period surveyed. Moreover, we believe that, in general, this is the most practical and equitable way to administer the data collection process, because it would be difficult to define which terminated hospitals should be excluded. For example, if a hospital terminates just before the proposed rule or between the proposed rule and the final rule, it would be very difficult to ensure that such a hospital was identified as terminated, since our analysis of the database is accomplished well before the final rule is published.

However, we agree that it is appropriate to eliminate data for terminated hospitals when there is reason to believe that the data are incorrect and cannot be verified due to the facility's closure. In the proposed rule, we only eliminated terminated hospitals if the data failed a critical edit that precluded us from computing an average hourly wage for those hospitals. In developing the final wage index, we have eliminated wage data for those terminated hospitals that failed any of our reasonableness edits. We believe this is appropriate since in most cases any aberrant data reported by terminated hospitals cannot be evaluated for reasonableness because hospital records may not be available to the intermediaries. However, if the wage data for a terminated hospital did not fail any of our edits for reasonableness it remains in the database and has been used in developing the wage index for the labor market area.

Comment: One commenter questioned our use of paid hours instead of worked hours in the computation of the wage index.

Response: We have always used total paid hours because they more appropriately reflect what is included in total salary. For example, if an individual takes paid sick leave, the corresponding hours need to be included in the total hours. This is appropriate because salaries are based on a specified work period (such as 40 hours per week) that includes any time during that period covered by paid leave, as well as any non-productive time for which the employee receives a salary (such as a paid lunch period). The definition for total hours will be clarified in the cost reporting instructions to specify that total hours mean total paid hours.

Comment: We received several comments concerning perceived problems with the reporting of fringe benefits. Some commenters indicated that there are inconsistencies across intermediaries in their decisions regarding allowable fringe benefits. In addition, some commenters requested that we recognize additional cost items as fringe benefits, while others questioned the appropriateness of certain fringe benefit costs included in the wage index.

Response: Fringe benefits are an integral part of employee compensation and are therefore an important component of the wage index, which is designed to reflect differences in labor costs across areas. Since we first began collecting fringe benefit costs for inclusion in the hospital wage index, we have instructed hospitals and intermediaries to apply the longstanding definition of fringe benefits included in section 2144 of the Provider Reimbursement Manual. Under this section, fringe benefits are defined as "amounts paid to, or on behalf of, an employee from which the employee derives a personal benefit."

This section also requires that, where applicable, fringe benefits must be reported to the IRS.

There may be questions as to whether a particular cost qualifies as a fringe benefit. Therefore, to assist intermediaries in determining which costs should be allowed as fringe benefits and should be included in the calculation of the wage index, we sent to each intermediary a list of some costs that might be included as fringe benefits. This list was developed based on our experience in handling fringe benefit issues that have come to our attention, to promote the consistent treatment of fringe benefits. However, this list was intended as a guideline only and was not intended to be all-inclusive. The intermediary determines if the costs meet the requirements listed in the Provider Reimbursement Manual.

We note that a particular cost might be considered a fringe benefit in one situation but not another. For example, parking costs are not generally considered a fringe benefit. However, in limited situations where free parking is not available to any employees in the area, free parking to employees could be considered a fringe benefit. The intermediary must evaluate such situations on a case by case basis for compliance with the prescribed definition of fringe benefits.

In order to provide further guidance, we have instituted a survey asking the major hospital associations, fiscal intermediaries, and other interested parties to comment on what specific cost items should be recognized as fringe benefits based on the longstanding definition included the Provider Reimbursement Manual. The results of that survey are not yet available. However, it is our intent to work with the hospital industry to develop a comprehensive list of what should be considered as fringe benefits. This list will then be available to all hospitals and intermediaries.

Comment: Two commenters suggested that we remove the data reported by a hospital from the wage index when the hospital reports no fringe benefits on Worksheet S–3. One commenter stated that in cases where hospitals directly charge fringe benefits to salaries, it is not appropriate for intermediaries to ask hospitals to retroactively provide a detailed breakdown of its fringe benefit costs.

Response: It has been a longstanding policy to allow hospitals to directly charge fringe benefits and other overhead costs to each cost center. Therefore, it would be inappropriate to eliminate a hospital's wage data because it elected to directly charge its fringe benefits to salaries. In cases where no fringe benefit costs were reported on line 6 of Worksheet S–3, intermediaries were asked to review the wage data to ensure that this was correct. However, we believe it is important that reported fringe benefit costs are appropriate for inclusion in the wage index. Therefore, we are considering requiring all hospitals to submit a detailed list with their Medicare cost report outlining those cost items included in fringe benefits. If this policy is adopted, hospitals may want to change their allocation method to allow easier determination of these fringe benefits. However, because of limited recordkeeping with respect to statistical data at some hospitals, such as public hospitals, it is not feasible to restrict the direct charging of overhead costs.

Comment: One commenter asserted that the wage data were revised for many hospitals that failed edits based on further instructions from HCFA. The commenter asserts that the regulations do not support such instructions and believes that the revisions, in effect, amount to retroactive rulemaking with respect to material wage index elements. For example, the commenter cited instructions with respect to contract labor costs that specified that Part B physicians contract costs should not be included. Because the instructions did not specifically exclude Part A physicians contract costs, the commenter argues that such costs are includable and any disallowance is a retroactive change in policy.

Response: Additional information provided to intermediaries by no means constitute a retroactive change in policy, but rather instructions concerning existing policies. It is common practice for fiscal intermediaries to seek guidance from HCFA on the appropriate interpretation of policies with respect to the allowability of certain costs. For example, the list of fringe benefits we issued to intermediaries in November 1992 was issued as a guideline to assist them in determining what should be considered a fringe benefit based on current policy with respect to the definition of fringe benefit costs. As discussed above, the disallowance of Part A physician costs is also a clarification of our definition for contract labor (that is, that only contract services directly related to hands-on patient care are includable). We continue to believe that issuing clarifications to intermediaries is necessary to ensure that only appropriate fringe benefits and contract labor costs are included in developing the wage index. The fiscal intermediary should settle a cost report in conformance with the appropriate instructions. Where there are questionable items the intermediary can refer to HCFA's guidelines.

Comment: Many commenters expressed concern over the process used to edit the FY 1990 wage index data. Some commenters pointed out specific problems with the edit process and provided suggestions for refinements, such as establishing a process for resolving issues raised by desk reviews at the time of tentative settlement of the cost report. Others cited inconsistencies between the HCRIS edits and the desk review edits. Several suggested that we create a work group comprised of representatives of hospitals, fiscal intermediaries, and HCFA in order to develop an ongoing mechanism to ensure that wage data are reported accurately and consistently.

Response: We are continuing our efforts to refine the edit process. We agree that an ongoing mechanism for early review of the wage data is needed, and we are working to establish such a process for future wage index updates. As this is the first year in which cost report data were used to compute the wage index, we could not anticipate the extent of the problems that occurred with the reporting of data. Because the HCRIS edits were in place at the time the FY 1990 cost report data were originally transmitted, we had expected that fewer data elements would fail edits. When we discovered that this was not the case (either due to bypasses of the edits or other errors), we initiated a special review program to deal with not only the comparisons of cost variances between the 1988 data and the FY 1990 data but also the HCRIS-type edits as well. We will continue to evaluate and update the edits included in our desk review package and welcome industry input into this process. In this regard, we are planning to convene a workgroup to discuss options for redefining labor market areas, and we will include the desk review edit process in the workgroup discussions. We will continue to strive to construct a better desk review package, consistent HCRIS edits, and a clearer set of instructions for the worksheet S–3, Part II.

Comment: A commenter suggested that HCFA establish an appeals process for disputes over corrections submitted by hospitals to intermediaries. The commenter stated that since the work sheet S-3 does not affect reimbursement for the FY 1992 cost report, hospitals are not able to make appeals through the Provider Reimbursement Review Board.

Response: We do not believe such a formal appeals process is necessary. Moreover, we do not believe that a formal appeals process would be feasible, since the process could not be completed before the development of the final wage index. In the few cases where the hospital and the intermediary have disagreed on specific cost items reported on worksheet S-3, the issue has been resolved by contacts between the hospital or intermediary and HCFA. Often after telephone discussions with the caller or writer, the issues were resolved.

We continue to believe that this method will resolve most disputes between hospitals and intermediaries.

However, if a hospital still feels that the issue has merit and believes that its intermediary is incorrectly handling the adjustment, the hospital has the option of requesting that the intermediary re-review the issue and ask that the intermediary receive HCFA's concurrence. The intermediary should send to HCFA a letter outlining the hospital's and intermediary's handling of the adjustment, and ask for clarification. After evaluating the facts, HCFA will contact the intermediary with the decision; the intermediary will, in turn, notify the hospital.

However, this process must be completed at least 3 months prior to the publication of the final rule, to afford the intermediary sufficient time to retransmit changes if necessary to the HCRIS system. Therefore, hospitals must submit such requests to their intermediary at least 4 months prior to our publication of the final rule. The hospital can evaluate the data HCFA is using either by requesting from the intermediary a copy of the worksheet S-3, Part II that has transmitted to HCRIS, or as indicated in the proposed rule, by requesting a copy of the public use wage file.

We believe that this process for resolving issues in dispute between the hospital and the intermediary will facilitate settling these disagreements

without the extensive delays inherent in a formal appeals process.

F. Revision to the Wage Index Based on Hospital Redesignations

Under section 1886(d)(8)(B) of the Act, hospitals in certain rural counties adjacent to one or more Metropolitan Statistical Areas (MSAs) are considered to be located in one of the adjacent MSAs if certain standards are met. Under section 1886(d)(10) of the Act, the Medicare Geographic Classification Review Board (MGCRB) considers applications by hospitals for geographic reclassification for purposes of payment under the prospective payment system.

The methodology for determining the wage index values for redesignated hospitals is applied jointly to the hospitals located in those rural counties that were deemed urban under section 1886(d)(8)(B) of the Act and those hospitals that were reclassified as a result of the MGCRB decisions under section 1886(d)(10) of the Act. Section 1886(d)(8)(C) of the Act provides that the application of the wage index to redesignated hospitals is dependent on the hypothetical impact that the wage data from these hospitals would have on the wage index value for the MSA to which they have been redesignated. Therefore, the wage index values were determined by considering the following:

- If including the wage data for the redesignated hospitals reduces the MSA wage index value by 1 percentage point or less, the MSA wage index value determined exclusive of the wage data for the redesignated hospitals applies to the redesignated hospitals. We note that if the wage index value for the MSA increases as a result of reclassification, the data for the reclassified hospitals is included in the MSA's wage index value.
- If including the wage data for the redesignated hospitals reduces the wage index value for the area to which the hospitals are redesignated by more than 1 percentage point, the hospitals that are redesignated are subject to the wage index value of the area that results from including the wage data of the redesignated hospitals (the "combined" wage index value). However, the wage index value for the redesignated hospitals cannot be reduced below the wage index value for the rural areas of the State in which the hospitals are located.
- Rural areas whose wage index values would be reduced by excluding the data for hospitals that have been redesignated to another area continue to have their wage index calculated as if no redesignation had occurred. Those rural areas whose wage index value increases as a result of excluding the wage data for the hospitals that have been redesignated to another area have their wage index calculated exclusive of the redesignated hospitals.
- The wage index value for an urban area is calculated exclusive of the wage data for hospitals that have been reclassified to another area. However, geographic reclassification may not reduce the wage index for an urban area below the Statewide rural average.

We note that, except for those rural areas where redesignations would reduce the rural wage index value, the wage index value for each area is computed exclusive of the data for hospitals that have been redesignated from the area for purposes of their wage index. As a result, several MSAs listed in Table 4a have no hospitals remaining in the MSA. This is because all the hospitals in these original MSAs have been reclassified to another area by the MGCRB. For those areas, we have listed the Statewide rural wage index value.

The revised wage index values effective for discharges occurring on or after October 1, 1993 are shown in Tables 4a, 4b, and 4c of the addendum to this final rule. Hospitals that are redesignated should use the wage index values shown in Table 4c. (Hospitals that were redesignated to an MSA under section 1886(d)(8)(B) of the Act or reclassified by a decision of the MGCRB should not use Table 4c if they have also been assigned to the same MSA based on the new OMB definitions.) For some areas, more than one wage index value will be shown in Table 4c. This occurs when hospitals from more than one State are included in the group of redesignated hospitals, and one State has a higher Statewide rural wage index value than the wage index value otherwise applicable to the redesignated hospitals. In addition, tables 4d and 4e list the average hourly wage for each labor market area based on the FY 1990 wage data. Hospitals can use this information in applying to the MGCRB for wage index reclassifications for FY 1995.

The final FY 1994 wage index values incorporate all reclassification decisions made by the MGCRB and the Administrator for FY 1994. There were 431 hospitals redesignated for purposes of the wage index (including hospitals redesignated under both sections 1886(d)(8)(B) and 1886(d)(10) of the Act). This number does not include MGCRB decisions that result in a reclassification to the same labor market area as the hospital is assigned under the revised MSA definitions. It does include changes that resulted from withdrawals of requests for reclassification, appeals, and the Administrator's review process.

Comment: One commenter expressed concern over labor market areas where the urban wage index is already lower than the Statewide rural wage index, and, as a result of reclassifications, is reduced even further. The commenter stated that in the past, HCFA has interpreted the provisions of section 1886(d)(8)(C) of the Act as limiting protection from wage index reductions to urban areas whose wage index values initially are above the Statewide rural wage index but fall below it due to reclassifications. The commenter asked that this protection be extended to urban areas whose wage index is below the Statewide rural wage index value.

Response: Section 13501(b) of Public Law 103–66 revises section 1886(d)(8)(C) of the Act to provide hold-harmless protection in this situation. The statute specifies that if the urban area has a wage index below the wage index for the rural area in the State in which it is located, or the urban area is located in a State that is composed of a single urban area, the urban wage index will not be reduced as a result of reclassifications. This statutory provision is effective retroactively to October 1, 1991. We will identify the affected hospitals and provide a payment adjustment for discharges occurring in FY 1992 and FY 1993. In addition, this change has been incorporated in the wage index values included in this final rule, and the payment effects have been reflected in the FY 1994 budget neutrality adjustments required under sections 1886(d)(3)(E) and 1886(d)(8)(D). Therefore, if excluding the wage data for the reclassified hospitals would reduce the wage index value for an urban area whose wage index is already below that of its Statewide rural area, the hospitals in the urban area continue to have their wage index value calculated as if no reclassifications have occurred. Also, if excluding the wage data for reclassified hospitals from an urban area located in a State that is comprised of a single urban area (for example, Rhode Island) reduces the wage index value, the hospitals in that area continue to have their wage index value calculated as if no reclassifications had occurred.

Comment: One commenter noted that hospitals have 45 days from publication of the proposed rule to withdraw their applications for geographic reclassification. The commenter asserted that since changes may occur in the wage index values between the publication of the proposed rule and the final rule due to editing and the

correction of errors in the FY 1990 data, hospitals should be permitted to withdraw their applications up to October 1, 1993 or the effective date of the wage index, whichever is later. The commenter believes this would have little effect on the budget neutrality adjustment required by statute.

Response: We believe that the proposed rule constitutes the latest feasible resource for providing hospitals with the necessary information to decide whether to withdraw requests for reclassification. We recognize that the proposed wage index values will change slightly as a result of withdrawal requests, the effect of any decisions by the MGCRB or the Administrator that were not issued in time to be taken into account in the proposed rule, and the effect of any further corrections to the wage data.

However, even if withdrawals after the 45-day deadline had no impact on the budget neutrality adjustment, they would have a direct impact on the area wage index values both for the area in which the hospital is located and the area to which it had previously been reclassified. Therefore, we cannot extend the 45-day deadline, because doing so would not provide reasonable time to take withdrawals into account in the development of the final wage index and prospective payment system rates. Moreover, if we allowed withdrawals up to October 1, 1993, hospitals would no longer be able to use the data in this rule to file MGCRB applications by October 1, 1993, because both the wage indexes and the average hourly wages would change as a result of the withdrawals. We note that although hospitals are permitted to withdraw their applications for reclassification at any time during the 45-day period, if an MGCRB decision has already been made, a hospital that requests that its application be withdrawn may not request that the MGCRB decision be reinstated after publication of the prospective payment system final rule.

G. Options for Phasing In the New Wage Index

Since FY 1991, the hospital wage index has been based on 1988 wage survey data. When we updated the wage index for FY 1991 to base it on the 1988 data, we proposed to limit the change in the wage index value of any labor market area whose wage index value would have changed more than 10 percent (55 FR 19445). Specifically, we proposed to limit the change in the wage index value to 10 percent plus half of the change above 10 percent. At that time, there were 38 labor market areas that would have been subject to the proposed limit, 23 of which faced more than a 10 percent decrease in their wage index value. In our September 4, 1990 final rule (55 FR 36041), we limited the change (in response to public comment) to 8 percent plus half the change above 8 percent.

Subsequently, section 4002(d)(1)(A) of Public Law 101-508, enacted November 5, 1990, delayed implementation of the updated wage data for 3 months. Further, section 4002(d)(1)(B) of Public Law 101-508 specified that the wage index used for payments for discharges occurring on or after January 1, 1991 was to be calculated using only data from the 1988 wage survey. For FY 1991 payments, the effect of these two provisions was essentially to provide hospitals with a blend of 25 percent 1984 wage data and 75 percent 1988 wage data.

Section 1886(d)(3)(E) of the Act requires the Secretary to update the wage index annually beginning October 1, 1993. Given concerns about the redistributional effect on payments to hospitals that result from updated wage data, we examined whether a phase-in of the updated wage data for FY 1994 would be appropriate. However, a phase-in of the FY 1994 wage index based on FY 1990 data is more complicated than a phase-in of the FY 1991 wage index because of the effects the new MSA definitions and geographic reclassifications by the MGCRB.

As discussed in detail in the proposed rule (58 FR 30240), we do not believe it would be appropriate to phase in the changes in MSA definitions and the geographic reclassifications. The statute provides for hospital payments based on geographic location unless the hospital has been reclassified by the MGCRB or is subject to section 1886(d)(8) of the Act. In addition, we do not believe it is appropriate to provide additional payments to hospitals no longer reclassified by the MGCRB or to limit payments to newly reclassified hospitals, which would occur under any hospital-level phase-in of the new wage index values. We explored three options for implementing the updated wage data and solicited comments in the proposed rule. The first option was to implement the new wage index without any phase-in. The second option was to blend the wage index values for each labor market area, using 50 percent of a wage index based on 1988 survey data and 50 percent of a wage index based on FY 1990 wage data. Both wage indexes under this option would be calculated using the revised MSA definitions and FY 1994 geographic reclassifications. In this way, the changes in geographic reclassification and the MSA changes would be fully accounted for in the wage index and would not be phased in; only the updated wage data would be phased in. Finally, we explored placing a cap of 10 percent on the maximum change in wage index value that hospitals in a given labor market area could experience due to the new wage data.

We proposed to implement the FY 1990 wage data without any phase-in. Given our statutory obligation to update the wage index annually to reflect updated wage data, we continue to believe the most recent data are the most accurate and therefore, the most appropriate data to construct the wage index. As noted in the proposed rule, the effects of the updated wage index on hospitals under each of the MSA-level phase-in options are not significantly different, and the number of area-level wage index values with substantial changes are much fewer than for the FY 1991 wage index update. After consideration of the phase-in alternatives, we proposed not to phase in the FY 1994 wage index, but solicited public comments on this issue.

Comment: We received several comments regarding a possible phase-in of the wage index. A few commenters urged that we use a 50-50 blend of the final wage index used for FY 1993 and the FY 1994 wage index constructed as in the proposed rule. These commenters cited overall data errors and reporting inconsistencies as a reason for supporting a phase-in. Several commenters urged that the new MSA definitions be implemented immediately, but that the 1988 wage survey data and the FY 1990 cost report data be used in a blend. All of these commenters believe that their preferred blend option would lessen the impact of the new wage index and help to ensure the financial stability of hospitals. Other commenters supported our proposed approach advocating the immediate use of the FY 1990 wage data and the new MSA definitions, without any phase-in.

Response: We believe that the FY 1990 data is much more accurate than any we have used previously and that a phase-in, which would continue the use of data that is now 6 years old, would be inappropriate when more recent data are available. The FY 1990 data have been subjected to comprehensive edits and revisions, both before and after the publication of the proposed rule. We are confident that this process has produced accurate data and a wage index that reflect relative hospital labor costs.

With regard to the commenters' concerns regarding reporting

consistency, although we cannot ensure complete intermediary consistency during the data review and audit process, we believe that application of the reporting rules by intermediaries has been more consistent than ever. As discussed in detail above, we have established comprehensive procedures to ensure that the data we used to develop the final wage index were accurate.

Finally, we note that the number of hospitals facing large increases or decreases in their wage index values due to the implementation of the new wage index is less than in the proposed rule, due to the data correction process. Two hundred eighty-one hospitals have a wage index value that is more than 10 percent lower than their current wage index, compared with 330 such hospitals based on the wage index in the proposed rule. We note that most of these large decreases were attributable to hospitals that lost their wage index reclassifications in FY 1994 after application of the revised MGCRB guidelines. In fact, only 25 of the hospitals had large decreases in their wage index value that were not attributable to a change in their reclassification status. In addition, the number of hospitals with a wage index value increase of more than 10 percent has also declined, from 217 hospitals in the proposed rule to 165 hospitals (134 of which did not change wage index reclassification status) in this final rule. Further, the number of hospitals facing a reduction in their wage index values of between 5 and 10 percent has declined from 721 to 652, while the number facing an increase of between 5 and 10 percent has remained essentially unchanged (from 211 hospitals in the proposed rule to 208 hospitals based on the final wage index).

For all of these reasons, we do not believe a phase-in of the wage index is necessary. The new data are more reflective of hospitals' current labor market situations than the 1988 wage data, and we do not believe we should continue to use older data when more recent data are available. In addition, as noted, the number of hospitals and labor market areas facing large changes in wage index value has decreased from the proposed rule.

Comment: One commenter opposes the continued use of the hospital wage index to adjust hospital prospective payments. This commenter believes that the volatility of the wage index indicates that hospitals that have refused to change inefficient behaviors are being rewarded, rather than differences in labor market characteristics.

Response: We disagree with the commenter. Section 1886(d)(3)(E) of the Act specifically requires that we adjust hospital payments to reflect area wage differences. Moreover, we believe that there are continuing, substantial differences in the labor costs that hospitals face that are beyond the control of those hospitals. For example, we believe that wages in New York City, New York, are higher than those in Dothan, Alabama for reasons other than the labor cost inefficiency of New York City hospitals.

The differences in labor costs across the country (as shown by the wide variation in wage index values) arise from a variety of factors. Different costs of living (as in the Dothan, AL and New York City example) are reflected in overall wage rates. In addition, competitive forces in different labor market areas, even with the same general cost of living, will result in disparate wage rates for certain classes of employees that are beyond the control of employers. The nursing shortages that have occurred in different parts of the country over the past several years are just one hospital-industry specific example. Further, as the general economy of a region fares better or worse, labor costs will vary as well.

If the commenter's views were accurate, labor market areas would have to be substantially or completely composed of inefficient hospitals (in the sense of having unnecessarily high labor costs) in order to reward hospitals for their inefficiency. An inefficient hospital in a labor market area composed of otherwise efficient hospitals would result in a wage index value for the area that would be slightly higher than necessary to compensate the majority of the hospitals in the labor market area for their labor costs, but that would be a great deal lower than that necessary to compensate the hospital with the inefficiently high labor costs. We believe that changes in wage index values are primarily due to changes in the labor market conditions that hospitals face. There is no evidence that wage fluctuations across areas are caused by inefficiencies, nor does the commenter provide any such evidence. We are, however, examining alternative labor market area definitions (as described in the proposed rule at 58 FR 30242).

H. Future Updates to Labor Market Areas

As discussed in section III.B above, the proposed FY 1994 wage index incorporates the labor market areas that result from OMB's revised MSA definitions based on the 1990 census data. The Prospective Payment Assessment Commission (ProPAC) has recommended that the Secretary substantially revise the hospital wage index under the prospective payment system for FY 1994 (Recommendation 11). Specifically, ProPAC recommends that we develop hospital-specific labor market areas based on geographic proximity, using each hospital's "nearest neighbors" for purposes of a revised wage index. An example studied by ProPAC was to establish each hospital's labor market area based on its 10 nearest neighbors within a 50-mile radius. ProPAC has also recommended that if HCFA is unable to implement a wage index using hospital-specific labor market areas in FY 1994, Congress should freeze the current wage index (and the wage index reclassifications approved for FY 1993).

As stated in the proposed rule, we do not believe it would be feasible or advisable to attempt to implement ProPAC's recommendation in FY 1994. Although we recognize that ProPAC's recommendation may have promise, we believe that careful analysis of the impact of such a proposal on hospitals is necessary before proposing to adopt such a significant change. In addition, there are also a number of administrative issues that must be carefully considered before ProPAC's proposal could be implemented, including the possible development of an exceptions or appeals process to resolve disputes concerning the labor market areas. Therefore, to facilitate a thorough analysis of ProPAC's proposal, we published in the proposed rule hospital-specific wage index values using ProPAC's data on hospital locations and the new FY 1990 hospital wage data (Appendix F). The tables indicate what each hospital's wage index value would be if the wage index were based on the wage data for the hospital and its 10 nearest neighbors up to a radius of 50 air miles. The tables also show which hospitals are in each hospital's labor market area based on ProPAC's data base. Subsequently, we discovered a technical error in the wage index values and republished a revised wage index value for each hospital in a correction notice issued June 29, 1993 (58 FR 34742).

We solicited public comments on the feasibility of ProPAC's proposal and suggestions concerning the development of an exceptions or appeals process, if appropriate, for possible implementation in FY 1995. We also solicited comments on a number of other issues such as the feasibility of using road miles instead of air miles, a process to use to verify hospital's

locations, and what the process should be to establish a wage index for new hospitals. We stated that we planned to continue our analysis of alternatives based on the current MSA based system that have appeared promising in the past, and that we planned to evaluate all potential labor market revisions using the same basic criteria. Comments on these issues were due to HCFA by August 31, 1993.

Comment: We have already received a number of comments dealing with the substance of the nearest neighbor proposal. We will not address those at this time because the deadline for comments was not until August 31, 1993. However, some commenters have stated that they are unable to comment meaningfully on the information we have published because of the errors in hospital location as determined in ProPAC's data base. Commenters also asserted that since ProPAC is conducting additional research on various aspects of the nearest neighbor proposal, the data we used to calculate the nearest neighbor hypothetical wage index values do not reflect ProPAC's final recommendation. One commenter stated that since we had published revised wage index values, HCFA should allow additional time for the public to submit comments. Another commenter suggested that in publishing a proposal for new labor market configurations, HCFA should make relevant supporting data (such as the address and longitude and latitude used for each hospital) readily available to the public and establish a process to be used to correct errors in the data. Some commenters noted that the point at which a hospital's longitude and latitude is taken could make a difference in determining if a hospital is included in a given labor market area. One commenter suggested that after ProPAC makes its final proposal that HCFA should publish the wage index values that would result from every alternative developed by ProPAC and give hospitals 90 days to comment.

Response: ProPAC recommended in its March 1, 1993 report that HCFA adopt its nearest neighbor proposal for implementation in FY 1994. For the reasons we outlined in the May 26, 1993 proposed rule, we do not believe it is feasible to do so for FY 1994 (58 FR 30242). However, because we believe that the proposal may have merit, we published hypothetical wage index values for every prospective payment system hospital on which we were given data in order to give the public time to study the proposal.

Regarding commenters concern about errors in ProPAC's database, we were aware that ProPAC's hospital location data base had not been verified. Thus, we stated in the proposed rule that "The determination of which hospitals comprise each hospital-specific labor market area is based on ProPAC's data base and has not been verified. Prior to implementation of hospital-specific labor market areas, we would verify the location of all hospitals." (58 FR 30242). In another section we asked for comments on the preferred process for verifying a hospital's location and noted that for large campuses a reference point would be needed to determine a hospital's longitude and latitude. We also noted that ProPAC had used six different data bases to develop its hospital location file. We cannot correct the hospital location file until we determine how to verify hospital location so that a consistent process can be used for every prospective payment system hospital. We gave the public an opportunity to comment on the issues involved in verifying hospital locations as well as other aspects of our labor market research because we believe it is important to allow the public to participate in the initial stages of our research. Public comment will also give us an indication of the extent of the errors in the data base.

In response to the commenter that requested additional time to study the revised wage data, we note that the correction notice was published June 29, 1993 and that comments were not due until August 31, 1993. Moreover, the correction notice only revised the wage index values, not the list of hospitals' nearest neighbors that was originally published. Thus, the public has had an additional month to analyze that aspect of the proposal, and we believe this constitutes ample opportunity for analysis and comment.

As outlined in the proposed rule, our plan is to analyze the comments we receive as well as to conduct the research we have outlined. We will also continue to consult with ProPAC and will study any additional information they develop. If the nearest neighbor wage index appears promising, we will develop and carry out a process to verify hospital locations in conjunction with the fiscal intermediaries and hospitals. Based on the information we receive, we may publish a proposal for revised labor market areas in the Spring of 1994 for public comment. We would include information describing all aspects of our proposal, and the public would have an opportunity to comment. We would consider all comments before issuing a final rule for implementation.

IV. Other Changes to the Prospective Payment System for Inpatient Operating Costs

A. Payment for Blood Clotting Factor for Hemophilia Inpatients (§§ 412.2 and 412.115)

Hemophilia is a blood disorder characterized by prolonged coagulation time, caused by an inherited deficiency of a factor in plasma necessary for blood to clot. Hemophilia encompasses three conditions: Factor VIII deficiency (classical hemophilia); Factor IX deficiency (plasma thromboplastin component); and Von Willebrand's disease. The most common factors required by hemophiliacs to increase coagulation are Factor VIII and Factor IX; a small number of hemophiliacs have developed inhibitors to these factors and require special treatment.

Under section 6011 of Public Law 101–239, Congress amended section 1886(a)(4) of the Act to provide that prospective payment hospitals receive an additional payment for the costs of administering blood clotting factor to Medicare hemophiliacs who are hospital inpatients. This add-on payment was effective for blood clotting factor furnished on or after June 19, 1990, and before December 19, 1991. We addressed the issue of payment for Medicare inpatients with hemophilia who require blood clotting factors in detail in the April 20, 1990 final rule with comment period (55 FR 15157), the September 4, 1990, final rule (55 FR 36000), and the final rule published August 30, 1991 (56 FR 43223). Section 13505 of Public Law 103–66 amended section 6011(d) of Public Law 101–239 to extend the period covered by the add-on payment for blood clotting factors administered to Medicare inpatients with hemophilia through September 30, 1994. Thus, section 6011 of Public Law 101–239 as amended provides for additional payment to be made to hospitals under the prospective payment system for the administration of blood clotting factor to Medicare hospital inpatients who have hemophilia for discharges occurring on or after June 19, 1990, and before October 1, 1994.

We are calculating the add-on payment for the extended period of applicability using the same methodology we used in FYs 1990, 1991, and 1992. The payment for blood clotting factor is based on a predetermined price per unit of clotting factor multiplied by the number of units provided. We establish a price per unit of clotting factor based on the most current price listing available from the Drug Topics Red Book, the publication

of pharmaceutical average wholesale prices (AWP). We set three separate add-on amounts, one for each of the three basic types of clotting factor. The add-on payment amount for each of the three factor types is based on the median AWP of the several products available in that category of factor, discounted by 15 percent.

To account for new products, the discontinuation of existing products, and other changes affecting the price of these factors, we reevaluate the price per unit for blood clotting factors for each Federal fiscal year based on the most current Drug Topics Red Book. In the August 30, 1991 final rule, we calculated updated prices for FY 1992 effective with discharges occurring on or after October 1, 1991, as follows:

Factor VIII	$0.72 per unit
Factor IX	0.26 per unit
Other Hemophilia Blood Clotting Factor	1.11 per unit

Given the extension of coverage under section 13505 of Public Law 103–66 for the add-on payment, the above prices remain in effect for discharges occurring in FY 1992; that is, from October 1, 1991 through September 30, 1992.

Due to the retroactive application of section 13505 of Public Law 103–66, we must calculate add-on payment prices for both FYs 1993 and 1994. We followed our past practice and set separate prices for each of those Federal fiscal years using the most recent Drug Topics Red Book. Thus, for discharges occurring in FY 1993, we calculated the price per unit of blood clotting factor based on the 1992 Drug Topics Red Book. Following the same methodology, that is, identifying the median price in the range of a specific factor type discounted by 15 percent, we are establishing the following prices per unit effective for discharges occurring in FY 1993 (October 1, 1992, through September 30, 1993):

Factor VIII	$0.76 per unit
Factor IX	0.30 per unit
Other Hemophilia Blood Clotting Factor	1.02 per unit

For discharges occurring during FY 1994, following the AWP guidelines in the 1993 Drug Topics Red Book, the updated prices per unit of factor are as follows:

Factor VIII	$0.76 per unit
Factor IX	0.33 per unit
Other Hemophilia Blood Clotting Factor	1.02 per unit

These prices will be effective for add-on payment for blood clotting factor administered to inpatients who have hemophilia for discharges beginning on or after October 1, 1993, through September 30, 1994.

As determined in prior years, we included in the category "Other" those new products that were most similar in terms of cost and effectiveness.

When the add-on payment for blood clotting factors was first implemented, specific codes were developed to identify these factors. (See the April 20, 1990, final rule with comment period (55 FR 15159).) We intend to use these same codes for both the retroactive and prospective periods covered by section 6011 of Public Law 101–239, as amended.

Because these codes were not required to be included on hospital inpatient claims for discharges occurring on or after December 19, 1991, hospitals that wish to receive payment for blood clotting factor provided to hemophiliacs will have to submit amended bills for discharges occurring on or after that date.

We will re-issue instructions to Medicare hospitals and fiscal intermediaries concerning the codes to use for clotting factor and how to use them. We note that payment will be made for blood clotting factor only if there is an ICD–9–CM diagnosis code for hemophilia included on the bill.

We have revised §§ 412.2(f)(8) and 412.115(b) to reflect the new effective date.

B. Outlier Payments for Transfer Cases (§ 412.4)

Since a Medicare discharge is the basis of payment under the prospective payment system, it is necessary to distinguish between discharges in which a patient has received complete treatment and discharges in which the patient is transferred to another acute care hospital for related care. If a full DRG payment were made to each hospital involved in a transfer situation regardless of the length of time the patient spent in the sending hospital before transfer, there would be a strong incentive to increase transfers, thereby unnecessarily endangering patients' health. Therefore, in a transfer situation, the regulations at § 412.4(d) provide that full payment is made to the final discharging hospital and each transferring hospital is paid a per diem rate for each day of the stay, not to exceed the full DRG payment that would have been made if the patient had been discharged without being transferred. The per diem rate is determined by dividing the full DRG payment that would have been paid in a nontransfer situation by the geometric mean length-of-stay for the DRG into which the case falls. Two exceptions to the transfer payment policy are transfer cases classified into DRG 385 (Neonates, Died or Transferred to Another Acute Care Facility) or DRG 456 (Burns, Transferred to Another Acute Care Facility), which are not paid on a per diem basis but receive the full DRG payment instead.

Transferring hospitals are also eligible for outlier payments for cases that meet the cost outlier criteria established for all other cases classified to the DRG. They are not, however, eligible for day outlier payments.

Since the inception of the prospective payment system, there has been concern that the flat per diem payment fails to account for the likelihood that the beginning of a patient's hospitalization is the most resource intensive portion of the stay. Thus, comments received in response to the September 1, 1983 interim final rule, which first implemented the prospective payment system, recommended that the transferring hospital should receive either the full DRG amount or should be paid on a sliding scale to reflect the higher costs of the first few days of a patient's stay. Our response at that time was that little or no data were provided in support of this position and that we believed that in many cases the bulk of a patient's treatment is received after the patient is transferred (49 FR 245, January 3, 1984).

In response to the requirement of section 9113 of the Consolidated Omnibus Budget Reconciliation Act of 1985 (Public Law 99–272), we prepared a report to Congress on the impact of outlier and transfer payment policy on rural hospitals (Review of the Impact of Outlier and Transfer Payment Policies Upon Rural Hospitals, May 1988). In this report, we examined the appropriateness of transfer payment policy for cases categorized by their length-of-stay at the transferring hospital. We found that, for transfer cases, the ratios of per diem payments to total charges were actually highest for cases with the shortest lengths-of-stay and, therefore, we recommended no changes in the per diem payment methodology.

In its March 1, 1992 Report to Congress, ProPAC recommended that the flat per diem methodology should be replaced with a graduated per diem methodology in order to recognize the higher daily costs associated with the first few days in a patient's stay. This recommendation has been repeated in the March 1, 1993 ProPAC report (Recommendation 16). In its reports, ProPAC cites a study conducted by RAND as evidence that average daily costs are highest during the first part of a patient's stay ("How Services and Costs Vary by Day of Stay for Medicare

Hospital Stays," RAND Report No. R-3870-ProPAC, March 1990). In response to the March 1, 1992 recommendation, we noted in the September 1, 1992 final rule (57 FR 39808) that RAND's study was not designed to evaluate transfer payment policy and included nontransfer cases in the analysis. Therefore, we did not implement ProPAC's recommendation because, among other things, the RAND report findings and the findings of our 1988 report did not agree. However, we stated that we would continue to examine transfer payment alternatives.

In order to analyze whether costs for transfer cases are indeed higher during the first few days of hospitalization prior to transfer, we contracted with RAND to conduct a study of Medicare transfer cases (contract number 500-92-0023). This analysis examined the characteristics of cases identified in the FY 1991 MedPAR file as transfers by their discharge destination. Using this criterion, the percentage of all cases identified as transfers was 2.75 percent. The percentage of rural cases that were transfers was 5.10 percent.

Prior to analyzing the per diem costs of transfer cases, RAND first examined the DRG-adjusted average costs of hospitals with a high proportion of transfers relative to other hospitals in order to determine whether these hospitals had higher overall costs per case. Rural hospitals above the 75th percentile in terms of their proportion of transfer cases had costs per case very similar to the average cost per case for all rural hospitals. The average cost per case for urban hospitals above the 75th percentile was below the average for all urban hospitals.

Having established that hospitals with the greatest proportions of transfer cases do not have a pattern of costs that are in excess of the average, the analysis turned to determining whether transfer cases are adequately compensated under the current payment methodology. The analysis separately examined transfers paid using the per diem method (cases where the patient was transferred prior to reaching the geometric mean length-of-stay) and transfer cases paid the full DRG amount (length-of-stay prior to transfer was equal to or greater than the geometric mean). Approximately 64 percent of the transfers examined were paid on the per diem basis. When RAND estimated payments for these transfer cases, the result was a ratio of Medicare payments to costs among transfer cases paid a per diem of 0.7221. However, among transfer cases receiving the full DRG amount, the ratio was only 0.6203. The ratio for all cases (transfer and nontransfer) was 0.9592 and for nontransfer cases it was 0.9665.

Dividing transfers into those with lengths of stay less than or greater than the geometric mean indicates not only that the payment-to-cost ratio for transfer cases is substantially less than the ratio for nontransfer cases, but also that, even for transfer cases receiving the full DRG amount, payments are, on average, much less than costs. Since transfer cases with length of stay equal to or longer than the geometric mean for the DRG receive the full DRG payment, revising the per diem payment methodology will not improve the payment-to-cost ratios for these cases. As we stated in the proposed rule, RAND's analysis is exploring all aspects of Medicare policy pertaining to transfer cases, including these cases, and we will continue to analyze appropriate policy changes.

Comparing the per diem payment based on geometric mean length of stay (our current policy) among cases that are transferred prior to reaching the geometric mean length of stay, RAND found that the first day of a stay costs a little over twice the per diem payment amount for cases in medical DRGs, and two-and-one-half times the per diem payment amount for cases in surgical DRGs (less than 1 percent of all cases classified to surgical DRGs are transfers). Among medical DRG transfer cases, the costs of the second day of a stay are about 20 percent higher than the applicable per diem payment amount, and each succeeding day costs about 10 percent more than the applicable per diem amount. Among surgical cases, the costs of each day after the first day are actually below the applicable per diem amount.

To evaluate the impact of replacing the flat per diem methodology with one designed to reflect the observed relationship between costs and the first few days of hospitalization, RAND simulated a transfer payment methodology that multiplies the flat per diem amounts by the coefficients referred to above. The improvement in payment-to-cost ratios was significant, from 0.7221 under current policy to 0.9719 using the scaled per diem. As part of its analysis, RAND also simulated the impacts of a transfer payment policy that would pay twice the per diem for the first day of hospitalization and a flat per diem after that. The results were similar to those using the per diem coefficients described above.

However, the effect of a graduated per diem on payment-to-cost ratios is not the only issue. Another consideration is the need to specify the transfer payment formula so as to fairly pay for these cases without creating an adverse impact on the incentives to provide appropriate care. While there is some concern that the current payment methodology discourages transfers due to the flat per diem payments, shifting the payments too much towards the first few days of hospitalization could actually encourage inappropriate transfers. Because of this, we intend to thoroughly analyze the various options and the resulting payments before making a change in our current transfer policy.

We note that ProPAC, in its March 1, 1993 report, recommended that Congress provide authority to the Secretary to implement a graduated per diem in a budget neutral manner. To implement the per diem coefficients in a budget neutral manner by offsetting the standardized amounts by a factor reflecting the additional payments made to short-stay transfer cases, RAND estimates a reduction in the standardized amounts of 0.32 percent would be necessary.

Transferring hospitals are also eligible to receive payments for cost outliers. Currently, in order to qualify, these cases must meet the same thresholds as nontransfer cases. Since cases transferred prior to reaching the geometric mean length-of-stay are paid less than the full DRG amount, they must incur much larger losses relative to their payments before qualifying for outlier payments. For example, using the FY 1993 cost outlier thresholds (the greater of 2.0 times the prospective payment rate for the DRG or $35,500), a discharge classified to a DRG with a prospective payment rate of $10,000 (geometric mean length-of-stay of 5 days) would have to incur a loss of at least $25,500 to qualify for outlier payments. However, a transfer classified to this same DRG that was sent to another hospital after 1 day would receive $2,000 under the per diem payment and would have to incur a loss of at least $33,500 to qualify for outlier payments. The loss prior to receiving any outlier payments is much greater for the transfer case ($2,000/$35,500 or a 0.0563 payment-to-cost ratio) than for the discharge case ($10,000/$35,500 or a 0.2817 payment-to-cost ratio).

For cases transferred prior to reaching the DRG geometric mean length-of-stay, we proposed that the cost outlier thresholds for such cases be set based on the per diem payment rate instead of the prospective payment rate for the DRG. For example, if the proposed methodology had been in place in FY 1993, the FY 1993 cost outlier thresholds for transfer cases would have

been the greater of: (1) 2.0 times the total per diem payment rate for the DRG or, (2) $35,500 divided by the geometric mean length-of-stay for the DRG, multiplied by the length-of-stay prior to transfer. (The FY 1994 thresholds are discussed in section II.A.4.d.ii. of the addendum to this preamble.) Under this method, using the FY 1993 cost outlier thresholds, the proportional loss for a transfer case would be identical to that for a discharge in the same DRG. Using the example described above, the fixed threshold for the transfer case will be reduced to $7,100 ($35,500/5), and the payment-to-cost ratio will rise to 0.2817 ($2,000/$7,100).

RAND estimated the impact upon transfer cases of this change. Under the current policy, only 1.35 percent of transfer cases qualify for cost outlier payments, and only 0.05 percent of transfers that are paid the per diem qualify for outlier payments. (Of transfers paid the full DRG amount, 3.63 percent meet the thresholds.) Under the per diem thresholds described above, 3.17 percent of transfer cases will qualify for cost outlier payments, including 2.93 percent of transfers paid using per diem and 3.17 percent of transfers paid the full DRG amount. The overall impact of this change on transfers paid the per diem rate is to increase the average payment per transfer case for outliers from $9 to $66. As a result of this change, the simulated average payment-to-cost ratio of transfers paid the per diem rises to 0.7417.

We are continuing to work with RAND to evaluate all aspects of transfer payment policy, including the impact on receiving hospitals of accepting transfers and the incentive to transfer patients back to community hospitals for recuperative care. We anticipate receiving the results of this analysis later this year.

Comment: In its comments, ProPAC supported our proposal that the cost outlier thresholds for transfer cases be based on the per diem payment rate instead of the prospective payment rate for the applicable DRG, noting that currently, transfer cases must incur much larger losses relative to their payments before qualifying for outlier payments. All other comments we received regarding this proposal were also supportive.

Response: We agree that this change in policy represents a significant improvement in case-level payment equity. Although the overall effect on transfer cases paid the per diem is marginal (a 2.7 percent improvement in their payment-to-cost ratios), the impact on individual cases can be significant.

Comment: Three commenters objected to our proposal not to implement a change in the transfer per diem payment methodology at this time. One commenter found unwarranted our concern that any new per diem payment methodology might create an incentive to transfer patients unnecessarily. This commenter pointed out that hospitals do not control transfers, rather physicians and family members dictate the appropriateness of a transfer. Another commenter contended that it is unlikely that hospitals would transfer patients based on the desire to receive a higher Medicare payment. The third commenter did not understand how more closely equating the payment-to-cost ratio of transfers paid the per diem to that of nontransfer cases would increase any adverse incentives that already exist.

Although ProPAC did not express an objection to our decision not to propose such a change for FY 1994, it did indicate its belief that the payment methodology analyzed by RAND will not result in inappropriate transfers. On the other hand, a major national hospital association recommended that we continue our work toward assuring that transfer payment policy provide proper incentives to both transferring and receiving hospitals.

Response: We continue to believe that it is appropriate to minimize any financial incentive created by the transfer payment methodology either to not transfer patients appropriately or to transfer patients inappropriately. We also believe that the commenters understate the role of hospital financial incentives in the decision to transfer a patient. We note that ProPAC, in its March 1, 1993, report, expressed the need for further examination of whether hospitals currently have the appropriate incentive to transfer patients, particularly for recuperative care. Also, as noted above, a national hospital association indicated its concern that transfer payment policy provide proper incentives. While we do not believe that financial impact is paramount among the factors influencing the decision of whether to transfer patients, we do believe they can be a significant consideration.

The current methodology was designed to be neutral in terms of these incentives, absent evidence that the costs per day of a transfer case are not evenly distributed throughout the stay. However, analyses by RAND and ProPAC indicate that transfer cases appear systematically to be paid less relative to their costs compared to nontransfer cases. We are concerned that this creates a significant adverse incentive against appropriately transferring patients, and thus we are examining alternatives that would both improve upon current payment equity and minimize the financial implications of the decision to transfer a patient.

The issue is more complicated, however, than suggested by the third commenter, who questions why equal payment-to-cost ratios for transfer and nontransfer cases would create adverse financial incentives. To illustrate, RAND simulated a graduated transfer payment methodology that resulted in payment-to-cost ratios for transfers roughly equal to those of nontransfers. (After publication of the proposed rule, RAND published its final report, with slightly different payment amounts from the preliminary results relied on for the proposed rule. "An Evaluation of Medicare Payments for Transfer Cases," RAND Report No. MR–304–HCFA.) The average payment-to-cost ratio using the graduated per diem methodology for transfers paid the per diem was 0.9722, compared to 0.9719 in the proposed rule. The ratio for nontransfers (0.9665) was unaffected.) Under this methodology (which used a per diem amount calculated by dividing the full DRG amount by the arithmetic mean length-of-stay rather than the smaller geometric mean length-of-stay), transfers assigned to medical DRGs were paid 2.69 times the per diem amount for the first day, 1.55 times the per diem amount for the second day, and 1.37 times the per diem amount for subsequent days, until the full DRG amount is reached. Although this methodology improves upon current payment equity for transfer cases by paying higher amounts for cases transferred within the first day or two after admission, we have several concerns regarding its application for payment policy.

First, as with any such estimate, the coefficients are dependent on the specification of the model and the data employed. Ensuring the continued validity of the per diem weighting factors would require frequent reestimation as other payment parameters change and more recent data become available. Second, we are concerned that weighting the per diem amounts by the coefficients directly from the regression may overstate the precision of the estimates of costs per day prior to transfer. Because available data do not attribute charges or costs to a particular day, the estimated costs for each additional day reflect the incrementally higher costs per case compared to transfers occurring one day earlier. If, in transfers occurring after three or more days, for example, costs

per day were more evenly distributed than the per diem payments, the higher payments of the first day or two may generate an incentive to transfer the patient prior to the point at which costs equal payments.

While we do not believe that hospitals are driven to either transfer or not transfer patients for purely financial reasons, and the results of the analyses by RAND and ProPAC clearly demonstrate that cases transferred out are currently underpaid on average, there are also significant unresolved issues at this time in terms of developing a graduated per diem payment methodology. We intend to evaluate further the issues discussed above, as well as RAND's findings regarding the costs at the receiving hospital, before making any further changes to transfer payment policy. In addition, as noted above, ProPAC recommends that Congress provide authority to the Secretary to implement future changes in a budget neutral manner, and we intend to seek that authority.

C. Changes to the Update Factors for Federal Rates for Inpatient Operating Costs (§ 412.63)

Public Law 103–66 made several revisions to the applicable percentage change (the update factor) to the Federal rates for prospective payment hospitals. Section 13501(a)(1) of Public Law 103–66 amended section 1886(b)(3)(B)(i) of the Act to provide for reductions in the update factors for the Federal rates for inpatient operating costs for FYs 1994 through 1997. The update factor for FY 1994 is now the market basket rate of increase minus 2.5 percentage points for hospitals located in urban areas and the market basket rate of increase minus 1.0 percentage point for hospitals located in rural areas. For FY 1995, the update for hospitals in urban areas is the market basket rate of increase minus 2.5 percentage points, while the rural update, that is, the update needed to make the rural payment rate equal to the other urban rate) is unchanged. For FY 1996, the update for all areas is the market basket rate of increase minus 2.0 percentage points. For FY 1997, the update for all areas is the market basket rate of increase minus 0.5 percentage point. For FY 1998 and subsequent years, the update for all areas is the market basket rate of increase. The specific updates to be applied for FY 1994 are discussed in the addendum and Appendix C to this document.

In this final rule with comment period, we are making the necessary changes to § 412.63 to implement these provisions.

D. Elimination of the Regional Floor (§ 412.70)

Section 4002(d) of Public Law 100–203 amended section 1886(d)(1)(A)(iii) of the Act to establish a "regional floor" for the prospective payment rate applicable to a hospital, effective for discharges occurring on or after April 1, 1988 and before October 1, 1990. Section 115(b)(1) of Public Law 101–403 (Continuing Appropriations, 1991, enacted on October 1, 1990) amended section 1886(d)(1)(A)(iii) of the Act to extend the regional floor provision through October 20, 1990.

Section 4002(e) of Public Law 101–508 further amended section 1886(d)(1)(A)(iii) of the Act to extend the regional floor provision through discharges occurring before October 1, 1993. In accordance with this section, hospital payments have been based on the greater of the national average standardized amount or the sum of 85 percent of the national average standardized amount and 15 percent of the average standardized amount for the Census region in which they are located. In the proposed rule, we announced that because the statutory authority for the regional floor was to expire on October 1, 1993, we would discontinue its use effective with discharges occurring on or after October 1, 1993. We received a number of comments supporting the continuation of the regional floor. After publication of the proposed rule, Congress enacted Public Law 103–66. Section 13501(f) of that law amended section 1886(d)(1)(A)(iii) of the Act to extend the regional floor provision through September 30, 1996. Therefore, we are revising § 412.70 to reflect the continued use of the regional floor through September 30, 1996.

E. Changes to the Update Factor Applied to Hospital-Specific Rates (§ 412.73)

Under section 1886(b)(3) (C) and (D) of the Act, certain hospitals that qualify as sole community hospitals (SCHs) and Medicare-dependent, small rural hospitals (MDHs) are paid using the higher of their FY 1982 or FY 1987 hospital-specific rate, updated through the current year. Section 13501(a)(2) of Public Law 103–66 amended section 1886(b)(3)(B) of the Act by adding a new paragraph (iv) to specify that, starting in FY 1994, updates to the hospital-specific rates will be made on a Federal fiscal year basis rather than on a cost reporting period basis. That section further states that the FY 1994 update factor will be computed taking into account the portion of the 12-month cost reporting period beginning during FY 1993 that occurred during FY 1994. As a result, the hospital-specific rate will be updated to October 1, 1993 as opposed to the beginning of the cost reporting period that begins in FY 1994.

In order to take into account the portion of the cost reporting period that began in FY 1993 and that occurs during FY 1994, the 1993 update factor used to determine the FY 1994 rate (and future rates) will be deemed to be the update factor necessary to update the hospital-specific rate to October 1, 1993. This will not in any way affect payments during FY 1993; in all cases, the payments for discharges occurring during the portion of FY 1993 that occurred in the cost reporting period that began during FY 1993 will be calculated using the full 1993 update of 4.1 percentage points. The deemed update will be used only to determine the hospital-specific rate starting in FY 1994. The deemed update factors are as follows:

FY 1993 cost reporting period beginning between	Deemed FY 1993 update factor (percent)
10/1/92–10/31/92	4.1000
11/1/92–11/30/92	3.7520
12/1/92–12/31/92	3.4052
1/1/93–1/31/93	3.0595
2/1/93–2/28/93	2.7150
3/1/93–3/31/93	2.3716
4/1/93–4/30/93	2.0294
5/1/93–5/31/93	1.6883
6/1/93–6/30/93	1.3484
7/1/93–7/31/93	1.0096
8/1/93–8/31/93	0.6719
9/1/93–9/30/93	0.3354

We calculated the deemed update factor by compounding the FY 1993 update factor using the number of months of the cost reporting period occurring in FY 1993. We raised 1.041 (the amount applied to the hospital-specific rates for cost reporting periods that began in FY 1993) to a power equal to the number of months in the cost reporting period that occurred during FY 1993 divided by 12, and determined the relevant percentage increase. For instance, for the update factor calculated for cost reporting periods beginning in June 1993, we raised 1.041 to the $^{4}/_{12}$ power, which equals 1.013484. The percentage increase is therefore 1.3484 percent (1.013484 − 1, converted to percentage terms).

In addition, new section 1886(b)(3)(B)(iv) specifies that the update factor for SCHs and MDHs paid using the hospital-specific rate will be the market basket rate of increase minus 2.3 percentage points for FY 1994, the market basket rate of increase minus 2.2 percentage points for FY 1995, and for

FY 1996 and beyond, the market basket rate of increase. The specific updates to be applied for FY 1994 are discussed in the addendum and appendix C to this document.

In this final rule with comment period, we are making the necessary changes to § 412.73 to implement these provisions.

F. Rural Referral Centers (§ 412.96)

Under the authority of section 1886(d)(5)(C)(i) of the Act, § 412.96 sets forth the criteria a hospital must meet in order to receive special treatment under the prospective payment system as a rural referral center (that is, payment is based on the other urban payment rate rather than the rural payment rate). One of the criteria under which a rural hospital may qualify as a referral center is to have 275 or more beds available for use. A rural hospital that does not meet the bed size criterion can qualify as a rural referral center if the hospital meets two mandatory criteria (number of discharges and case-mix index) and at least one of three optional criteria (medical staff, source of inpatients, or volume of referrals). With respect to the two mandatory criteria, a hospital is classified as a rural referral center if its—

- Case-mix index is at least equal to the lower of the median case-mix index for urban hospitals in its census region, excluding hospitals with approved teaching programs, or the median case-mix index for all urban hospitals nationally; and
- Number of discharges is at least 5,000 discharges per year or, if fewer, the median number of discharges for urban hospitals in the census region in which the hospital is located. (We note that the number of discharges criterion for an osteopathic hospital is at least 3,000 discharges per year.)

1. Case-Mix Index

Section 412.96(c)(1) provides that HCFA will establish updated national and regional case-mix index values in each year's annual notice of prospective payment rates for purposes of determining rural referral center status. In determining the proposed national and regional case-mix index values, we followed the same methodology we used in the November 24, 1986 final rule, as set forth in regulations at § 412.96(c)(1)(ii). Therefore, the proposed national case-mix index value included all urban hospitals nationwide, and the proposed regional values were the median values of urban hospitals within each census region, excluding those with approved teaching programs (that is, those hospitals receiving indirect medical education payments as provided in § 412.105).

The values in the proposed rule were based on discharges occurring during FY 1992 (October 1, 1991 through September 30, 1992) and included bills posted to HCFA's records through December 1992. Therefore, in addition to meeting other criteria, we proposed that to qualify for initial rural referral center status for cost reporting periods beginning on or after October 1, 1993, a hospital's case-mix index value for FY 1992 would have to be at least—

- 1.2919; or
- Equal to the median case-mix index value for urban hospitals (excluding hospitals with approved teaching programs as identified in § 412.105) calculated by HCFA for the census region in which the hospital is located. (See table set forth in the May 26, 1993, proposed rule at 58 FR 30247.)

Based on the latest data available (through June 1993), the final national case-mix value is 1.2944 and the median case-mix values for each region are set forth in the table below:

Region	Case-mix index value
1. New England (CT, ME, MA, NH, RI, VT)	1.1863
2. Middle Atlantic (PA, NJ, NY)	1.1923
3. South Atlantic (DE, DC, FL, GA, MD, NC, SC, VA, WV)	1.3055
4. East North Central (IL, IN, MI, OH, WI)	1.2224
5. East South Central (AL, KY, MS, TN)	1.2432
6. West North Central (IA, KS, MN, MO, NE, ND, SD)	1.2159
7. West South Central (AR, LA, OK, TX)	1.2892
8. Mountain (AZ, CO, ID, MT, NV, NM, UT, WY)	1.3479
9. Pacific (AK, CA, HI, OR, WA)	1.3039

For the benefit of hospitals seeking to qualify as referral centers or those wishing to know how their case-mix index value compares to the criteria, we are publishing each hospital's FY 1992 case-mix index value in Table 3C in section V of the addendum to this final rule. In keeping with our policy on discharges, these case-mix index values are computed based on all Medicare patient discharges subject to DRG-based payment.

2. Discharges

Section 412.96(c)(2)(i) provides that HCFA will set forth the national and regional numbers of discharges in each year's annual notice of prospective payment rates for purposes of determining referral center status. As specified in section 1886(d)(5)(C)(ii) of the Act, the national standard is set at 5,000 discharges. However, we proposed to update the regional standards. The proposed regional standards were based on discharges for urban hospitals' cost reporting periods that began during FY 1991 (that is, October 1, 1990 through September 30, 1991). That is the latest year for which we have complete discharge data available.

Therefore, in addition to meeting other criteria, we proposed that to qualify for initial rural referral center status for cost reporting periods beginning on or after October 1, 1993, the number of discharges a hospital must have for its cost reporting period that began during FY 1992 would have to be at least—

- 5,000; or
- Equal to the median number of discharges for urban hospitals in the census region in which the hospital is located. (See table set forth in the May 26, 1993, proposed rule at 58 FR 30247.)

Based on the latest discharge data available, the final median numbers of discharges for urban hospitals by census region are as follows:

Region	Number of discharges
1. New England (CT, ME, MA, NH, RI, VT)	7468
2. Middle Atlantic (PA, NJ, NY)	8749
3. South Atlantic (DE, DC, FL, GA, MD, NC, SC, VA, WV)	7533
4. East North Central (IL, IN, MI, OH, WI)	7647
5. East South Central (AL, KY, MS, TN)	5875
6. West North Central (IA, KS, MN, MO, NE, ND, SD)	5339
7. West South Central (AR, LA, OK, TX)	5050
8. Mountain (AZ, CO, ID, MT, NV, NM, UT, WY)	8257
9. Pacific (AK, CA, HI, OR, WA)	5358

We note that all the regional standards now exceed the national of 5,000. Therefore, 5,000 discharges is now the standard all hospitals will have to meet. We reiterate that, to qualify for rural referral center status for cost reporting periods beginning on or after October 1, 1993, an osteopathic hospital's number of discharges for its cost reporting period that began during FY 1992 would have to be at least 3,000.

Comment: One commenter suggested that we modify the case-mix index values and discharges used to qualify for rural referral center status to reflect the impact of transfer cases. The commenter pointed out that the transfer-adjusted case-mix index and number of discharges values would be more

precise and that since these values are already calculated for capital base-year redeterminations, no additional information would be required.

Response: The commenter has offered an interesting suggestion. However, we believe it would be inappropriate to implement such a change in this final rule. First, the transfer-adjusted case-mix index values and transfer adjustments to discharges that are calculated for capital base-year redetermination are based on individual hospital's fiscal years whereas, for referral center purposes, the case-mix index values for individual hospitals and for the national and regional values are based on Federal fiscal years. Thus, contrary to the commenter's assertion, a separate calculation would be necessary.

In addition, there may be policy reasons arguing against the commenters suggestion. Section 2311(a) of Public Law 98–369 (Deficit Reduction Act of 1984) amended section 1886(d)(5)(C)(i) of the Act by providing that effective October 1, 1984, a rural hospital can seek referral center classification on the basis that certain of its operating characteristics (as determined by the Secretary) are similar to those of a typical urban hospital located in the same census region. Section 9302(d)(1) of Public Law 99-509 (Omnibus Budget Reconciliation Act of 1986) further amended section 1886(d)(5)(C)(i) of the Act by providing that a rural hospital can qualify as a referral center if, in addition to meeting other criteria as required by the Secretary, its case-mix index is equal to or greater than the median case mix index for urban hospitals (other than hospitals with approved teaching programs) located in the same census region, and if it has at least 5,000 (3,000 for rural osteopathic hospitals) discharges a year or, if less, the median number of discharges for urban hospitals in the region in which hospital is located.

Thus, there is an extensive legislative history requiring that referral centers demonstrate that they are similar to either urban hospitals nationwide or to urban hospitals located within the same census region. There is an equally strong indication of Congressional intent that referral centers serve as the resource to which smaller, rural community hospitals may transfer their "sickest" patients; that is, Congressional debates on the rural referral center provision contemplated that such hospitals would be large, technologically sophisticated hospitals serving patients from a diverse geographic area.

Generally we believe that there should be a greater number of patients transferring into referral centers from other hospitals than transferring out to other hospitals. Conversely, in the past, we have found that generally rural hospitals transfer more cases than they receive. To the extent that our premise concerning referral centers is true, any transfer adjustment to discharges might serve to disadvantage a rural hospital seeking referral center status. For rural referral centers seeking to maintain their status, the effects of a transfer adjustment to discharges may or may not be advantageous, since we would also have to apply the transfer adjustment to determine the median number of discharges from urban hospitals nationally and within each census region. Since some of the regional urban median values are very close to the 5,000 national standard, the effect may or may not be significant.

In regard to the impact of transfer cases on case-mix index values, we believe that in most instances the effects of any adjustment will be negligible because, again, we would also adjust for transfers the national and regional case-mix index values for urban hospitals.

Although we are not implementing the commenter's suggestion in this year's final rule, we will consider the effects of such a policy change and, if warranted, may propose a revision in the proposed rule concerning changes to the prospective payment system for FY 1995.

Comment: One commenter stated that, for purposes of determining whether a hospital has 275 beds under § 412.96(b)(1)(ii), we have revised the criterion from an available bed count during the cost reporting period (§ 412.118(b)) to an average for the full cost reporting period (§ 412.105(b)). The commenter states that this method disadvantages hospitals that temporarily close a wing for remodeling and suggests that a hospital be required to maintain an average of 275 beds for only a majority (183 days) of the cost reporting period.

Response: There has been no change in our policy regarding counting days since the bed-count criterion was lowered from 500 to 275 effective for discharges on or after April 1, 1988 (section 4005(d) of Pub. L. 100–203). Section 412.118(b) was redesignated as § 412.105(b) as a part of the FY 1992 final rule (August 30, 1991; 56 FR 43241) and is worded exactly as it was previously. Thus, although the regulation section number changed, the policy did not.

In the September 30, 1988, final rule with comment period (53 FR 38513), we discussed in detail how we would count beds to determine whether a hospital meets the 275-bed criterion. As set forth in that final rule and codified at § 412.96(b)(1)(ii), we allow a hospital attempting to qualify initially for rural referral center status to submit convincing evidence to show that it has increased its bed count since its most recently completed cost reporting period. That is, a hospital may submit documentation to show that its bed count has increased because it transferred a previously excluded unit to prospective payment status; it expanded the number of beds it permanently maintains and has available for patient lodging; it reopened beds previously closed for renovation; or it merged with one or more other hospitals.

We do not allow an existing rural referral center to use these same methods to maintain its referral center status because, as we have previously stated, we believe it is important for a hospital to demonstrate that it has maintained at least 275 beds on average throughout its entire cost reporting period not just for a particular portion of the year, even if portions of the hospital were temporarily closed.

Thus, we do not agree with the commenter's suggestion and are not adopting it.

3. Retention of Referral Center Status

Section 412.96(f) states that each hospital receiving the referral center adjustment is reviewed every 3 years to determine if the hospital continues to meet the criteria for referral center status. To retain status as a referral center, a hospital must meet the criteria for classification as a referral center specified in § 412.96(b)(1) or (b)(2) or (c) for 2 of the last 3 years, or for the current year.

The requirement for triennial review was originally added to the regulations in 1984, to be effective for cost reporting periods beginning on or after October 1, 1987 (the end of the first 3 years of the referral center adjustment). However, two statutory moratoriums on the performance of the triennial reviews were enacted by Congress. The second of these moratoriums expired as of October 1, 1992. Therefore, the first triennial reviews of referral centers were implemented effective with cost reporting periods beginning on or after October 1, 1992. See the June 4, 1992 proposed rule (57 FR 23647) and the September 1, 1992 final rule (57 FR 39787) for a detailed explanation of the moratorium and the implementation of the triennial reviews.

Since publication of the proposed rule on May 26, 1993, Public Law 103–66 was enacted. Section 13501(d)(1) of Public Law 103–66 provides that any hospital that was classified as a rural referral center as of September 30, 1992, will continue to be so classified for the hospital's cost reporting periods beginning during FYs 1993 and 1994, unless the area in which the hospital is located is redesignated as an MSA by OMB for that fiscal year. (See section III.B of this preamble for a detailed discussion of the new MSA designations.)

Therefore, any hospital that lost its referral center status because of its failure to meet the triennial review requirements will be reinstated as a referral center retroactive to the date of termination. Section 13501(d)(3) of Public Law 103–66 provides that a lump-sum retroactive payment be made to the hospital equal to the difference between the aggregate payment made to the hospital under the prospective payment system (excluding outlier payments) and the amount the hospital would have received had its referral center status not been terminated. We have sent instructions to HCFA regional offices to terminate triennial review and to reinstate referral center status to all hospitals that were terminated. We are issuing separate instructions to the Medicare fiscal intermediaries concerning the calculation of the lump-sum retroactive payment due each affected referral center and will issue payment as soon as possible.

Some referral centers, anticipating the loss of the referral center adjustment during FY 1993 because of failure to meet the triennial review criteria, sought and were approved for reclassification of their standardized amounts to urban areas through the MGCRB. Normally, hospitals approved for reclassification have only 45 days from the date of the proposed rule to withdraw their request. However, because of the retroactive reinstatement of referral center status, the law provides that hospitals in this situation may retroactively withdraw their requests for reclassification. That is, section 13501(d)(2) of Public Law 103–66 provides that, should any hospital fail to qualify for reinstatement as a referral center due to its reclassification to an urban area by the MGCRB for its standardized amount for FY 1993 or 1994, or both, the hospital must be notified of its failure to requalify for referral center status and be given the opportunity to decline reclassification retroactively.

Generally, because a redesignated hospital received payment at the same rate it would have had it remained a referral center (that is, using the other urban standardized amount), any retroactive payment amounts will be minimal. If the hospital elects to decline reclassification, its referral center status will be reinstated back to the date it was terminated and payment will be calculated (including the lump-sum amount) as if the reclassification had never occurred. If the hospital elects to retain its reclassification, it will be considered to have voluntarily terminated its referral center status effective with the date of its reclassification or effective with the date it lost its referral center status because of triennial review, whichever is earlier. (See the August 30, 1991, final rule (56 FR 43200–43202) for a full discussion of the impact of geographic reclassification of the standardized amount on referral center status.)

We have revised § 412.96(g)(2) to reflect the extension of rural referral center status and the moratorium on triennial review.

Comment: We received one comment suggesting that we eliminate the triennial review requirement and that all referral centers keep their status for at least another 2 years.

Response: Because of the enactment of section 13501(d) of Public Law 103–66, as discussed above, the commenter's suggestion is made moot.

G. Hospitals in Areas Redesignated as Rural (§ 412.102)

On December 28, 1992, the Office of Management and Budget (OMB) announced revisions to the Metropolitan Statistical Area (MSA) definitions based on 1990 census data. As a result, 20 counties that were previously part of MSAs lost their urban status and are now part of a rural area. However, on June 30, 1993, OMB announced further revisions to the MSA definitions. As a result, urban status has been restored to 5 of the affected counties. Therefore, beginning October 1, 1993, the date on which the new MSA definitions will be implemented under the prospective payment system, the hospitals in 15 counties will be paid based on the rural standardized amount instead of an urban standardized amount. Section 1886(d)(8)(A) of the Act provides for an adjustment to the payment amounts for hospitals reclassified from urban to rural after April 20, 1983. Under the statute, a hospital that loses its urban status as a result of an OMB redesignation occurring after April 20, 1983, qualifies for special consideration by having the standardized amount payment reduction phased in over a 2-year period. We note that the impact of this provision will be minimized because in FY 1995 the rural standardized amount will be set equal to the other urban standardized amount.

As described at § 412.102, in the first year that a hospital loses urban status, an eligible hospital will receive, in addition to its rural average standardized amount, two-thirds of the difference between its present rural standardized amount and the urban standardized amount that it would have received had it retained its urban status. In the second year, the hospital's additional payment will be one third of the difference between the rural standardized amount and the appropriate urban standardized amount.

Section 1886(d)(8)(A) of the Act specifies that eligible hospitals will receive these special transition payments for two cost reporting periods. This provision was part of the Deficit Reduction Act of 1984 (Pub. L. 98–369), enacted on July 18, 1984. In drafting the law, Congress specified the use of cost reporting periods rather than Federal fiscal years because at that time hospitals were phasing into the prospective payment system at the beginning of their cost reporting periods. However, applying a literal reading of the statute at this time would result in denying some hospitals a full year of transition payments if their cost reporting periods do not coincide with the Federal fiscal year. To avoid such differential treatment, we proposed to implement these special transition payments at the beginning of the Federal fiscal year, which is consistent with the effective date of the revised MSA definitions. As proposed, we have revised § 412.102 to reflect this change.

In addition, since a hospital's payment status for the disproportionate share hospital adjustment provided under § 412.106 depends on its urban/rural designation for purposes of the standardized amount payment, where applicable, we proposed to include disproportionate share hospital payments in determining the amount of transition payments a hospital would receive.

Comment: Several commenters suggested that HCFA was incorrectly interpreting the 2-year phase-in allowed for under section 1886(d)(8)(A) of the Act for hospitals reclassified from urban to rural as a result of the Office of Management and Budget's 1990 revisions to Metropolitan Statistical Areas. HCFA has taken the position that the transition payment does not encompass differences in the wage index. The commenter asserts that section 1886(d)(8)(A) of the Act does not

distinguish between the wage index and standardized amount and that Congress therefore intended the phase-in to include all differences in payment.

Response: We have always taken the position that the transition payment in section 1886(d)(8)(A) of the Act applies only to the standardized amount and not to the wage index. According to the statute, the transition payment is based in part on "the amount which *would have been payable* to such hospital * * * *on the basis of an urban classification*." (Emphasis added.) Accordingly, HCFA considers the amount of payment the hospital would receive if it were classified as an urban hospital.

Under the statute, a hospital's status as urban or rural determines which average standardized amount it receives. In contrast, the wage index value that a hospital receives does not depend on the hospital's status as an "urban" hospital or a "rural" hospital by itself. Instead, the wage index value depends on the labor market area in which the hospital is located. Therefore, we believe the transition payment does not encompass differences in a hospital's wage index.

The legislative history supports this interpretation. Section 1886(d)(8)(A) of the Act was enacted by the Deficit Reduction Act (DEFRA) of 1984. The Conference Report states:

> Different Federal rates are calculated for hospitals located in rural areas and hospitals located in urban areas. * * * The Senate Amendment would provide that hospitals located in counties redesignated as rural since enactment of the prospective payment system would be allowed a two-year transition to the rural rates.

H.R. Conf. Rep. No. 861, 98th Congress, 2d Sess. 1299 (1984). This language indicates that Congress intended to limit the transition payment to the standardized amounts and did not intend to encompass the wage index.

Significantly, the statutory provision closely parallels a change to Medicare regulations proposed by HCFA prior to the date of enactment. On July 3, 1984, we published a proposed prospective payment system rule (49 FR 27422). The Office of Management and Budget issued revised MSA designations on June 30, 1983, and we proposed to exercise our exceptions authority to implement by regulation a 2-year transition for hospitals in areas redesignated from urban to rural. Under the proposal, in the first year a hospital would have received, in addition to its rural Federal rate, two-thirds of the difference between the rural Federal standardized amount and the urban standardized amount; in the second year, the hospital would have received one-third of the difference.

On July 18, 1984, after the proposed rule was published, Congress enacted section 1886(d)(8)(A) of the Act. This statutory provision, like the proposed transition payment described above, provides for a 2-year transition from the urban rate to the rural rate, under which hospitals receive two-thirds of the difference in the first year and one-third of the difference in the second year.

This historical background indicates that Congress adopted HCFA's methodology for computing the amount of transition payments. The preamble to the July 3, 1984, proposed rule includes a specific summary of the computation, the first two steps of which are as follows:

- Adjust the labor-related portions of the Federal urban and rural standardized amounts by the *rural area wage index;*
- Determine the difference between the adjusted urban and rural standardized amounts. (See 49 FR 27426 (emphasis added).)

Thus, the July 3, 1984 proposed rule, published prior to the enactment of section 1886(d)(8)(A) of the Act, makes clear that the amount of the transition payment was to be based on the difference between the Federal urban and rural standardized amounts after each had been adjusted by the rural area wage index. There is no evidence that Congress intended to change the proposed methodology.

On August 31, 1984, we published a final rule to implement section 1886(d)(8)(A) of the Act. HCFA has always interpreted the statute to mean that transition payments encompass only the difference in the standardized amounts. Now, however, the commenters raise the argument that, because labor market areas are based on MSAs, the distinction between the standardized amounts and the wage index is illogical. They also argue that most of the decrease in payment resulting from the new MSAs arises from the difference in the wage index, and that HCFA's policy is inconsistent with the purpose of the transition payment, which is to soften the financial impact of MSA redesignations.

We acknowledge the concerns of the commenters, but as the earlier discussion indicates, we do not believe the statute was intended to address differences in the wage index. The wage index does not depend on a hospital's status as urban or rural. Moreover, other hospitals may also be subject to a decrease in their wage index as a result of the new MSA designations. The statute confers broad discretion on the Secretary in applying the wage index, and we do not believe that Congress intended for us to apply section 1886(d)(8)(A) of the Act to grant a wage index transition payment to some hospitals, when other hospitals do not receive such a transition payment. Finally, at the time section 1886(d)(8)(A) of the Act was enacted, the difference between the urban standardized amount and the rural standardized amount was greater than it is today; therefore, the financial impact of receiving the rural standardized amount as opposed to the urban standardized amount was greater than it is today. We believe the statute was intended to address this difference only.

H. Indirect Costs for Graduate Medical Education Programs (§ 412.105)

Section 1886(d)(5)(B) of the Act provides that prospective payment hospitals that have residents in an approved graduate medical education program receive an additional payment to reflect the higher indirect operating costs associated with graduate medical education. The regulations governing the calculation of this additional payment are set forth at § 412.105. Each hospital's additional indirect medical education (IME) payment is determined by multiplying the hospital's total DRG revenue by the applicable IME adjustment factor. The adjustment is based on the hospital's resident-to-bed ratio. Currently, to be included in a hospital's resident count, a resident must be assigned to a portion of the hospital subject to the prospective payment system or the outpatient department of the hospital.

Section 13506 of Public Law 103–66 amended section 1886(d)(5)(B)(iv) of the Act to provide that, interns and residents providing services at any entity receiving a grant under section 330 of the Public Health Service Act that is under the ownership or control of a hospital (if the hospital incurs all, or substantially all, of the costs of the services furnished by the interns and residents) are to be included in the hospital's resident count for IME. These entities are commonly known as community health centers. Therefore, we are revising § 412.105(g) to reflect this change. We will be issuing instructions to fiscal intermediaries concerning the implementation of this revision. In the interim, if a hospital believes it is entitled to additional payments under this provision, the hospital should contact its fiscal intermediary.

I. Disproportionate Share Adjustment (§ 412.106)

Section 1886(d)(5)(F) of the Act provides for additional payments for hospitals that serve a disproportionate share of low income patients. Section 1886(d)(5)(F)(vii), as added by section 6003(c)(1)(B) of Public Law 101–239, specifies the formula for determining the disproportionate share adjustment percentage for hospitals that are located in an urban area and have 100 or more beds, or are located in a rural area and have 500 or more beds. The statute establishes different payment formulas for different years, including a change in the formula for discharges occurring on or after October 1, 1993.

Regulations concerning the disproportionate share adjustment are set forth at § 412.106. Under § 412.106(c)(1)(i), a hospital that is located in an urban area and has 100 or more beds, or is located in a rural area and has 500 or more beds, must have a "disproportionate patient percentage" of at least 15 percent to qualify for a disproportionate share payment adjustment. Section 412.106(d)(2) sets forth the formulas for determining the disproportionate payment adjustment factors applicable to these two groups of hospitals.

We are not making changes to any part of § 412.106 in this final rule. However, we wish to ensure that hospitals are aware of the revised payment formulas that will take effect in FY 1994. Specifically, for discharges occurring on or after October 1, 1993 and before October 1, 1994, any such hospital with a disproportionate share patient percentage greater than 20.2 percent will receive a disproportionate share adjustment equal to 5.88 percent plus 80 percent of the difference between 20.2 percent and the hospital's disproportionate patient percentage. If one of these types of hospitals has a disproportionate patient percentage of at least 15 percent but not more than 20.2 percent, for discharges occurring on or after October 1, 1993, it will receive a disproportionate share adjustment equal to 2.5 percent plus 65 percent of the difference between 15 percent and the hospital's disproportionate patient percentage.

J. Medicare-Dependent, Small Rural Hospitals (§ 412.108)

Section 6003(f) of Public Law 101–239, which added section 1886(d)(5)(G) to the Act, created a new category of hospitals eligible for a special payment adjustment under the prospective payment system. The adjustment was limited to Medicare-dependent, small rural hospitals (MDHs) and was effective for cost reporting periods beginning on or after April 1, 1990, and ending on or before March 31, 1993. Section 1886(d)(5)(G)(iii) of the Act defines an MDH as any hospital that meets all of the following criteria:

- The hospital is located in a rural area.
- The hospital has 100 or fewer beds.
- The hospital is not classified as an SCH (as defined at § 412.92) at the same time that it is receiving payment under this provision.
- In the hospital's cost reporting period that began during FY 1987, not less than 60 percent of its inpatient days or discharges were attributable to patients covered by Medicare Part A benefits.

(See the April 20, 1990, final rule with comment period (55 FR 15154–15156) and the September 4, 1990, final rule (55 FR 35994–35998) for a full discussion of the qualifying criteria and payment methodology for MDHs.) The regulations concerning the MDH provision are set forth at § 412.108. With the expiration of the provision for cost reporting periods ending on or before March 31, 1993, payment to MDHs reverted to the standard rural Federal payment rates under the prospective payment system.

Section 13501(e) of Public Law 103–66 amended section 1886(d)(5)(G) of the Act to extend the MDH provision through discharges occurring before October 1, 1994. Under the revised provision, for their first three 12-month cost reporting periods beginning on or after April 1, 1990, MDHs will be paid using the same methodology that is used to pay sole community hospitals, that is, based on whichever of the following rates yields the greatest aggregate payment for the cost reporting period:

- The national Federal rate applicable to the hospital;
- The updated hospital-specific rate using FY 82 cost per discharge; or
- The updated hospital-specific rate using FY 1987 cost per discharge.

After the first three 12-month cost reporting periods, for discharges occurring in any subsequent cost reporting period (or portion thereof) but before October 1, 1994, MDHs will be paid the Federal rate plus 50 percent of the amount, if any, by which the hospital's updated applicable (1982 or 1987) hospital-specific rate exceeds the national Federal rate. The MDH provision expires for all hospitals effective with discharges occurring on and after October 1, 1994, the date on which the urban/rural payment differential will be eliminated. After three 12-month cost reporting periods, the add-on payment to an MDH will be reduced to 50 percent of the difference by which the hospital's updated 1982 or 1987 cost per discharge exceeds the fully Federal rural rates applicable to the hospital.

Hospitals that were previously paid under the MDH provision need take no action to be reinstated. The Medicare fiscal intermediaries will automatically revise the payment methodology for all previously entitled MDHs unless there is evidence that the hospital no longer meets the qualifying criteria, for example, the hospital is located in an area that has been redesignated by OMB as an urban area, the hospital now has more than 100 beds, or the hospital has subsequently qualified as an SCH.

Section 13501(e)(3) of Public Law 103–66 provides for a lump-sum retroactive payment to each MDH equal to the difference between the aggregate payment made to the hospital under the prospective payment system (section 1886 of the Act) (excluding outlier payments) and the amount the hospital would have received had its MDH status continued uninterrupted. Again, previously qualified MDHs need take no action to qualify for this lump-sum payment. The fiscal intermediaries will calculate the difference between the amount the hospital received (excluding outlier payments) and the amount to which the hospital is entitled as an MDH and will issue a lump-sum payment to the hospital as soon as possible. For hospitals that no longer meet the criteria to qualify for MDH status, the lump-sum adjustment will be calculated from the date on which the hospital lost its MDH status to the date on which the hospital ceased to meet the criteria, for example, the date the hospital was redesignated to an urban area or qualified as an SCH.

Some hospitals, anticipating the loss of MDH status with the end of their cost reporting period ending on or before March 31, 1993, applied for and were approved for reclassification to urban areas for purposes of receiving the urban rate through the MGCRB. Normally, hospitals approved for reclassification have only 45 days from the date of the proposed rule to withdraw their request. However, the statute provides that hospitals in this situation may retroactively withdraw their requests for reclassification. That is, section 13501(e)(2) of Public Law 103–66 provides that should any hospital fail to qualify for reinstatement as an MDH due to its reclassification to an urban area by the MGCRB for FY 1993 or 1994, the hospital must be notified of its failure to requalify for MDH status and be given the opportunity to decline

reclassification retroactively. If the hospital elects to decline reclassification, its MDH status will be reinstated back to the date it lost its MDH status and payment will be calculated (including the lump-sum amount) as if the reclassification had never occurred. If the hospital elects to retain its reclassification, it will not be considered to be an MDH for the fiscal year for which it elects to retain reclassification.

We have revised the regulations at § 412.108 (a) and (c) to include the new effective date and payment methodology for MDHs.

K. Direct Graduate Medical Education Payment (§ 413.86)

1. Elimination of Cost of Living Update in Per Resident Amounts for Direct Medical Education

Section 1886(h) of the Act requires the calculation of hospital-specific approved per resident graduate medical education amounts for cost reporting periods beginning on or after July 1, 1985, based on the hospital's allowable costs for its cost reporting period beginning during Federal FY 1984. Section 1886(h)(2)(D) of the Act generally provides for updating the approved per resident amount for subsequent years by the estimated percentage change in the Consumer Price Index (CPI–U).

Section 13563(a)(1) of Public Law 103–66 requires that for cost reporting periods beginning in FYs 1994 and 1995 the approved per resident amount for a hospital will be updated for primary care residents and obstetrics and gynecology (OB–GYN) residents only. For all other residents, the per resident amount for cost reports beginning in Federal FYs 1994 and 1995 will not be updated for inflation. The effect of this change for teaching hospitals with both primary care (or OB–GYN) residents and non-primary care residencies is to have two different per resident amounts for those cost reporting periods. One amount (for primary care and OB–GYN residents) will reflect the prior period per resident amount with the CPI–U adjustment and one amount (for all other residents) will reflect the prior period per resident amount without the adjustment.

In addition, section 13563(a)(2) amended section 1886(h)(5) to specify that the term "primary care resident" means a resident enrolled in an approved medical residency training program in family medicine, general internal medicine, general pediatrics, preventive medicine, geriatric medicine or osteopathic general practice.

Section 1886(h)(4) of the Act bases payment for direct GME costs on a hospital's number of full-time equivalent (FTE) residents multiplied by a hospital-specific per resident amount. The number of FTE residents is determined by applying a weighting factor to each resident. A resident in an initial residency period is weighted as 1.0. If the resident is not in an initial residency period the weighting factor is reduced, as specified at § 413.86(g)(3). The initial residency period is defined at § 413.86(g)(1), as the minimum number of years of formal training necessary to satisfy the requirements for initial board eligibility in the particular specialty plus one year, not to exceed five years.

Section 13563(b) of Public Law 103–66 also added a preventive medicine residency provision to the GME payment provisions at section 1886(h) of the Act. Section 1886(h)(5)(F) of the Act is amended to allow a hospital to treat a resident or fellow in an approved preventive medicine residency or fellowship program the same as a resident in a geriatric program for purposes of determining whether a resident is in an initial residency period. That is, a preventive medicine resident or fellow would also be allowed to be counted as an FTE resident weighted as 1.0, for up to an additional 2 years beyond the initial residency period limitations. This change is effective on August 10, 1993. Before this effective date, the weighted FTE factor for preventive medicine residents beyond their initial residency period was reduced as specified at § 413.86(g)(3).

In this final rule we are revising the regulations at § 413.86, concerning direct graduate medical education payments, to implement these statutory requirements. We are adding to the regulations at § 413.86(b) the statutory definition of primary care resident. "Primary care resident" is a resident enrolled in an approved medical residency training program in family medicine, general internal medicine, general pediatrics, preventive medicine, geriatric medicine or osteopathic general practice.

We are also revising § 413.86(e)(3) to add paragraph (e)(3)(ii), which limits to primary care residents and OB–GYN residents only the adjustment of each hospital's per resident amount in the previous cost reporting period by the projected change in the CPI–U, for cost reporting periods beginning in FYs 1994 and 1995.

Finally, we are adding a sentence to the end of the first paragraph in § 413.86(g)(1) to specify that, effective August 10, 1993, a resident or fellow in an approved preventive medicine residency or fellowship program may also be counted as a full FTE resident for up to 2 additional years beyond the initial residency period limitations.

2. Technical Change

As proposed, we are making a technical change to correct an error in § 413.86(h)(2). In the second sentence of § 413.86(h)(2), we are revising the phrase "On or before July 1, 1986 and before July 1, 1987," to read "On or after July 1, 1986 and before July 1, 1987,".

L. Other Technical Changes (§§ 412.1, 412.2, 412.75, 412.108 and 412.234)

As proposed, we are making other technical changes to the regulations in §§ 412.1, 412.2, 412.75 and 412.108 to remove and replace obsolete language and to correct references.

We are also republishing provisions in § 412.234(b) that were inadvertently deleted from the regulations text published in the latest edition of the Code of Federal Regulations (CFR) due to an error in amendatory language in our September 1, 1992 final rule. In order to provide the public with the complete text of the provisions of § 412.234(b), pending publication of the next edition of the CFR, we are publishing § 412.234(b) in its entirety.

V. Changes and Clarifications to the Prospective Payment System for Capital-Related Costs

A. Evaluation of Provisions Relating to Obligated Capital for Hospitals Subject to Lengthy Certificate-of-Need (CON) Process (§ 412.302(c)(2))

Section 412.302(c)(2) specifies the conditions under which capital projects may be treated as obligated capital for hospitals subject to a lengthy CON process. As we noted in the policy changes and clarifications made in the last capital prospective payment system update published on September 1, 1992 (57 FR 39792–39793), we intend to conduct a systematic evaluation of the appropriateness of changing the criteria established in that regulation. We explained that any reassessment would be made within the policy framework used to establish the initial transition payment policies (August 30, 1991 final rule, 56 FR 43391–43394). We stated that we believed it would be premature to make modifications to the CON provisions based on the comments we received to the proposed rule changes (June 4, 1992 proposed rule, 57 FR 23651) without sufficient information about the extent of any potential problems unique to such hospitals. We

solicited information from the hospitals that had not already advised us of their concerns but were also concerned about the issues raised by the commenters.

As stated in the proposed rule, we do not have the prerequisite information to complete our assessment in time for consideration during the FY 1994 rulemaking process. Therefore, we will continue our efforts to evaluate capital prospective payment system policies on which we receive comments and expect to report on them in the proposed rule setting forth our FY 1995 capital payment policies and rates. In the interim, we continue to solicit hospital information on this matter.

Comment: We received two comments urging immediate adoption of the changes to § 412.302(c)(2) that we have under reassessment and ongoing solicitation for comment. The commenters assert that delay in making the requested revisions prevents certain hospitals from securing adequate capital formation or financing. The requested changes to the regulations are the same as those previously sought and described in the preamble to the September 1, 1992 final rule (57 FR 39792–39793).

Response: As the commenters acknowledge, these comments are virtually identical to those discussed in the preamble to the September 1, 1992, final rule. We believe that our original rationale and concerns over making immediate revisions to the obligated capital criteria in certificate-of-need (CON) situations continue to be appropriate.

As we pointed out in the FY 1993 final rule, any modifications should be made only after we have sufficient information about the extent of the problems cited by commenters and can determine whether the issues raised apply to any other hospital situations. In order to do so, we would conduct an evaluation of how the transition rules affect hospitals initiating major capital projects and solicit information from hospitals in similar circumstances who had not already advised us of these concerns. We pointed out that we were retaining the current regulation's thresholds because to do otherwise would give hospitals subject to CON processes even more favorable treatment than that afforded other hospitals. We also noted that any reassessment of the current thresholds would be made solely within the policy framework used to establish the initial transition payment policies.

Although data are not yet available that will allow evaluation of the effects of current transition rule payments for hospitals in these and similar circumstances (see 58 FR 30249), the comments submitted in response to our 2 requests in the last 12 months indicate that this issue apparently is limited to very few hospitals located in a single geographic area. The comments received to date on this issue indicate that not more than 9 hospitals, and possibly as few as 2 hospitals, would benefit from the changes suggested to the regulations that specifically address the lengthy CON provision for obligated capital determinations (that is, § 412.302(c)(2)). In addition, the comments identify locally imposed conditions as the primary cause of those affected hospitals' inability to meet the current obligated capital thresholds for their long-standing capital modernization plans. Thus, locally imposed conditions, rather than the capital prospective system criteria, which already recognize the lengthy CON process some hospitals faced at the time our transition rules were implemented, are the source of the problem.

We believe, therefore, that extending the time for announcing a final decision on this matter may be advantageous to those who have consistently advocated the suggested changes. It also will provide more time for hospitals in similar situations in other areas to alert us to whether there is any broader extent of concern over the pertinent thresholds and to assess any potentially negative payment impact reflected in the first transition year data, once that information is available. Due to these considerations we will retain in the regulations the current criteria for lengthy CON situations, at least until the FY 1995 prospective payment system rulemaking process while we continue to study this issue.

B. Evaluation of Provision Relating to Exceptions Payment (§ 412.348)

Although the May 26, 1993 proposed rule did not address any issues regarding policy on exceptions payments, we received one comment concerning exceptions payment policy. Section 412.348 of the regulations provides that, during the transition period, a hospital may receive additional payments under an exceptions process when its payments under the prospective payment system for capital-related costs are less than a minimum percentage, established by class of hospital, of the hospital's reasonable inpatient capital-related costs. The amount of the exceptions payment is the difference between the hospital's minimum payment percentage and the payments the hospital would receive under the capital prospective payment system in the absence of an exceptions payment. The comparison is made on a cumulative basis for all cost reporting periods during which the hospital is subject to the capital-PPS transition methodology.

The minimum payment levels by class of hospitals for FY 1994 are:

- For sole community hospitals, 90 percent;
- For urban hospitals with at least 100 beds that have a disproportionate share of at least 20.2 percent or that received more than 30 percent of net revenue from State or local funds for indigent care, 80 percent;
- For all other hospitals, 70 percent of the hospital's reasonable inpatient capital-related costs.

As we stated in the August 30, 1991, final rule for the prospective payment system for capital-related costs (56 FR 43362 and 43409), we will revise the minimum payment levels during any subsequent transition year, if necessary, to keep total payments under the exceptions process at no more than 10 percent of aggregate capital prospective payments. Section 412.348(f) requires that total estimated payments under the exceptions process may not exceed 10 percent of the total estimated capital prospective payments (exclusive of hold-harmless payments for old capital) for the same fiscal year.

Comment: One commenter pointed out that a specific group of hospitals in a particular geographic region has scheduled major modernization projects during the initial years of the capital prospective payment system transition period. The commenter recommended that HCFA maintain the transition period cumulative payment floor for high disproportionate share hospitals at 80% of actual Medicare inpatient capital-related costs and extend the 80% minimum payment level for those hospitals for ten years beyond the transition period. The basis for these recommendations is that the affected hospitals will not have had the opportunity to accrue retained earnings during lower-than-average cost years under capital-PPS to fund the needed modernization project.

Response: As is the case with the provision related to obligated capital for hospitals in CON situations (section V.A above), we have received no information to indicate that this issue affects more than a small number of hospitals in a limited geographic area. We are committed to maintaining a limit on the amount of exceptions payments of 10 percent of total capital prospective payments. Therefore, it may become necessary to reduce the minimum payment levels later in the transition to keep within the 10 percent limit. We

thus cannot adopt the recommendation that the minimum payment level for high disproportionate share hospitals be maintained at the 80 percent level throughout the transition period. We also believe that it is still premature to consider whether to adopt an exceptions provision after the transition period is over. We will study this issue later in the transition when we have more experience with prospective payments for capital-related costs. In any case, we do not believe that the difficulties of a small group of hospitals justifies major changes to the prospective payment system for capital-related costs. As the conference committee report accompanying the legislation establishing the prospective payment system for capital-related costs noted, by the time the system was implemented in October, 1991, hospitals had "had more than eight years since the Congress originally indicated its intent to reimburse for capital-related costs on a prospective basis." H.R. Report No. 495, 100th Cong., 1st Sess. 535 (1987). Thus, hospitals had ample opportunity to adjust their capital projects to the realities of payment under a prospective system. The affected hospitals have not yet expended funds on the projects cited. They therefore still have time to assure that they can fund the projects from the expected level of regular payments under the prospective payment system for capital-related costs.

C. Specific Adjustment for Taxes to the Federal Capital Prospective System Rate

Although the May 26, 1993 proposed rule did not address the ongoing issue of determining whether an adjustment to the capital prospective payment system Federal rate is appropriate to recognize the tax costs that proprietary hospitals must pay, we received two comments on this issue.

Comment: Two commenters recommended that HCFA exclude the cost of property taxes from the Federal capital rate base, provide a payment adjustment mechanism to proprietary hospitals to recognize this unique cost for that group of hospitals, and eliminate any inequitable distribution of capital prospective payments among all hospitals. One commenter submitted a specific methodology that would utilize hospital-specific tax assessment cost data to make a base year adjustment to the Federal rate and develop an adjustment factor that would remove State and local government incentives to adopt or increase provider-specific assessments.

Response: In the August 30, 1991, final rule, we acknowledged the need to study this issue and determine whether special treatment is feasible and appropriate for a specific component of capital-related costs, such as taxes (56 FR 43364–43365). In addition to noting our general opposition to singling out costs for specific payment adjustment action, we indicated that we also shared the concerns offered in the comments that property taxes and assessments are legitimate costs that vary across hospital groups and that including those costs in the rate base may overpay some hospitals and underpay others. This matter is further complicated by the fact that some commenters also asserted that non-proprietary hospitals were subject to other assessments in lieu of taxes. Thus, we concluded that additional information was needed on this issue before a comprehensive decision could be made. However, we did not have (and at this time still do not have) any data available to help determine whether and how to deal with special treatment of such costs in the capital prospective payment system rate payments. Neither HCFA's data base nor interested hospital industry sources we contacted could provide actual data (rather than estimates) on this capital cost item.

To obtain the information necessary to evaluate and address this issue, we have changed the hospital cost report to secure data on all types of property assessments effective for cost reports for hospital fiscal years beginning in FY 1992. That information will not be available in reliable form before the end of 1993. We hope to provide our initial analysis of this information for public review and comment during the FY 1995 rulemaking process.

In the interim, we reiterate our belief that currently property taxes are adequately represented in a hospital's payment for old capital under the hold harmless payment methodology and in the hospital-specific rate of the fully prospective payment methodology. Thus, the impact of not providing special treatment will be minimal in the first few years of the transition period when the hospital-specific payment basis constitutes the major portion of hospital capital payments. In the meantime we will give careful consideration to this matter.

D. Reduction to the Standard Federal Capital Rate and Provision for Redetermination of Hospital Payment Methodologies (§§ 412.308 and 412.336)

Section 13501(a)(3) of Public Law 103–66 amended section 1886(g)(1)(A) of the Act to require that, for discharges occurring after September 30, 1993, the unadjusted standard Federal rate be reduced by 7.4 percent. The purpose of the reduction is to correct inflation forecast errors that had accumulated by May 1993. By that time, the estimates of the increases in Medicare inpatient capital costs per case from FY 1989 to FY 1992 had declined from 31.30 percent (as stated in the August 30, 1991, final rule) to 21.57 percent. The 7.4 percent reduction to the standard Federal rate was calculated to account for those revised estimates (1.2157/1.3130=.926, a 7.4 percent decrease). This provision of Public Law 103–66 also requires that, for cost reporting periods beginning on or after October 1, 1993, the Secretary redetermine which hospital payment methodology is to be applied under the capital prospective payment system transition rules to take that reduction into account.

In this final rule, we are revising two sections of the capital prospective payment system regulations to implement these statutory requirements. Specifically, we are revising the regulations at § 412.308 to provide for the required 7.4 percent reduction to the unadjusted standard Federal rate. We are adding a new § 412.308(b)(2) to provide that, effective FY 1994, the standard Federal rate is reduced by 7.4 percent. Under current § 412.308(b), HCFA determined the standard Federal rate by adjusting the FY 1992 updated national average cost per discharge by a factor so that estimated aggregate payments based on the standard Federal rate adjusted by the payment adjustments described in § 412.312(b) equal estimated aggregate payments based solely on the national average cost per discharge. Section 412.308(c) further provides that the standard Federal rate is updated for inflation each Federal fiscal year and adjusted each year by an outlier adjustment factor, an exceptions payment adjustment factor, and two budget neutrality factors to determine the Federal capital payment rate for that year. Thus, the standard Federal rate is to be distinguished from the annual Federal rate actually used in making payment under the capital prospective payment system. The standard Federal rate is the underlying or base rate used to determine the Federal rate for each Federal fiscal year by applying the formula described in § 412.308(c). The annual Federal rate is the result of that determination process in § 412.308(c).

Because this reduction applies to the base rate prior to the application of the adjustment factors for outliers, exceptions, and budget neutrality, the reduction does not have the effect of lowering the FY 1994 Federal rate 7.4

percent compared to FY 1993. Rather, the 7.4 percent reduction to the standard Federal rate interacts with the annual rate adjustments (for example, the budget neutrality factor designed to assure that aggregate payments are 90 percent of estimated reasonable costs) to produce a 9.33 percent reduction in the FY 1994 Federal rate compared to FY 1993. We discuss the effect of this reduction to the standard Federal rate and other changes in the adjustment factors to the FY 1994 Federal rate in Part III of the Addendum to this final rule.

We note that the full effect of the 7.4 percent reduction to the standard Federal rate will become evident only when the budget neutrality requirement expires in FY 1996. Until FY 1996, the 7.4 percent reduction in the standard Federal rate will have no effect on aggregate capital prospective payments. This is because the change in the Federal rate is offset in FY 1994 and FY 1995 by the requirement that aggregate payments equal 90 percent of estimated payments on the basis of reasonable costs. Thus, we estimate that actual aggregate payments under the capital prospective payment system will increase 2.99 percent in FY 1994 over FY 1993. (As we explain in Part III of the addendum, this increase is the result of the estimated increase in actual costs of 9.45 percent in FY 1994 over FY 1993, less the estimated excess in aggregate payments during FY 1993 of 6.27 percent over the budget neutrality target.) However, we expect to realize significant savings from the effect of the change in FYs 1996, 1997, and 1998, when there is no longer a budget neutrality requirement tying aggregate payments to a percentage of estimated costs. Until then, the budget neutrality provision will cause other elements of the system to adjust so that aggregate payments will equal 90 percent of estimated reasonable costs.

In addition, we are adding a new paragraph (d) to § 412.336 to provide for redetermination of the hospital payment methodology to take into account the 7.4 percent reduction to the standard Federal rate.

The original payment methodology determinations for the capital prospective payment system transition were made in accordance with § 412.336(a). A hospital whose FY 1992 hospital-specific rate was greater than the FY 1992 Federal rate (after adjustment to account for the effects of the payment adjustments and outlier payments) has received payment under the hold-harmless methodology. Under § 412.344, hold harmless hospitals receive the greater of 100 percent of the Federal rate per discharge, or 85 percent of old capital costs plus a ratio of the Federal rate for new capital per discharge. (Under § 412.344(b), hospitals receiving payment based on 100 percent of the Federal rate during the later of FY 1994 or the year in which obligated capital comes on line continue to receive payment on that basis for the rest of the transition.)

A hospital whose FY 1992 hospital-specific rate was lower than its adjusted FY 1992 Federal rate has received payments based on the fully prospective methodology. Under § 412.340, fully prospective hospitals receive a payment per discharge based on a blend of the hospital-specific rate and the Federal rate (for cost reporting periods beginning in FY 1994, 70 percent of the hospital-specific rate and 30 percent of the Federal rate).

Under § 412.328(f), a fully prospective hospital can request a redetermination of its hospital-specific rate to account for increases in old capital costs (for example, obligated capital that is brought into use for patient care) in cost reporting years subsequent to the hospital base year. Under § 412.336(b), a hospital whose redetermined hospital-specific rate is higher than the adjusted Federal rate applicable to the new period is paid under the hold-harmless methodology effective with the beginning of the new base period. The redetermination mechanism thus provides an opportunity for fully prospective hospitals to receive the benefits of the hold harmless payment methodology on the basis of an increased hospital-specific rate. Once a hospital is paid under the hold harmless methodology, whether after the original payment methodology determination or only after a redetermination of the hospital-specific rate, the hospital is paid under that methodology for the remainder of the transition (56 FR 43403).

Since a hospital once paid under the hold-harmless methodology continues to be paid under that methodology for the remainder of the transition, the purpose of the payment methodology redetermination required under Public Law 103–66 is to allow fully prospective hospitals a further opportunity to receive payments under the hold-harmless payment methodology. To fulfill the requirements of Public Law 103–66, this final rule with comment provides that the intermediaries will compare the FY 1994 hospital-specific rate of each fully prospective hospital with the FY 1994 adjusted Federal rate of that hospital. A fully prospective hospital whose FY 1994 hospital-specific rate is higher than its FY 1994 adjusted Federal rate will be paid under the hold-harmless methodology beginning with its first cost reporting period beginning on or after October 1, 1993 and through the remainder of the transition. A fully prospective hospital whose FY 1994 hospital-specific rate is lower than its FY 1994 adjusted Federal rate will continue to be paid under the fully prospective methodology (unless the intermediary determines separately, after a redetermination of the hospital-specific rate to reflect an increase in old capital costs, as provided under § 412.328(f), that the hospital should be paid under the hold-harmless methodology).

Hospitals already paid under the hold-harmless methodology prior to FY 1994 will continue to be paid on that basis. However, in accordance with the provisions of § 412.344 (a) and (b), intermediaries determine whether each hold-harmless hospital receives 100 percent of the Federal rate, or 85 percent of old capital costs plus a ratio of the Federal rate for new capital. Accordingly, the reduction of the standard Federal rate may affect whether a hold-harmless hospital is paid 100 percent of the Federal rate, or the hold-harmless payment for old capital plus a ratio of the Federal rate for new capital. Section 412.344 (a) and (b) already provide that hospitals receive the higher of these formulae at least through FY 1994. (The requirement of § 412.344(b) for continued basis of payment remains in effect.) Therefore, no new provision is required in the regulations to take into account the effect of the reduction to the Federal rate on hold-harmless hospitals.

E. Disproportionate Share Adjustment Factor (§ 412.320)

Under section 1886(d)(5)(F)(i)(II) of the Act, hospitals may qualify for a disproportionate share adjustment and receive additional payments for operating costs. The August 30, 1991 final rule implementing the capital prospective payment system established a special provision under which these hospitals may receive an additional adjustment to the Federal rate for the prospective payment system for capital-related costs. Section 412.320(b)(2), as added by the final rule of August 30, 1991, establishes a disproportionate share adjustment of 14.16 percent to the capital Federal rate for these hospitals. As we explained in the preamble to the final rule (56 FR 43377), our intent was to establish a capital disproportionate share adjustment for these hospitals that would result from deeming them to have a disproportionate patient percentage equivalent to that which

would generate their operating disproportionate share payment, using the formula for urban hospitals with at least 100 beds. For discharges occurring on or after October 1, 1991, those hospitals qualified for an operating disproportionate share adjustment of 35 percent, which was equivalent to having a disproportionate share patient percentage of 65.4 based on the operating disproportionate share formula that was in effect for urban hospitals with at least 100 beds. Using the disproportionate share patient percentage of 65.4, we established the capital disproportionate share adjustment factor of 14.16 percent for these hospitals.

Section 1886(d)(5)(F)(vii) of the Act, as added by section 6003(c)(1)(B) of Public Law 101–239, specifies the formula for determining the disproportionate share adjustment percentage for hospitals that are located in an urban area and that have 100 or more beds. The statute establishes different payment formulas for different years, including a change in the formula for discharges occurring on or after October 1, 1993. Specifically, for discharges occurring on or after October 1, 1993 and before October 1, 1994, a hospital with a disproportionate share patient percentage greater than 20.2 percent will receive a disproportionate share adjustment equal to 5.88 percent plus 80 percent of the difference between 20.2 percent and the hospital's disproportionate share percentage.

Under this new formula, a hospital receiving a disproportionate share adjustment of 35 percent would be deemed to have a disproportionate share percentage of 56.6. In turn, a disproportionate share percentage of 56.6 yields a capital disproportionate share adjustment of 12.14 percent. Thus, the disproportionate share adjustment provided under § 412.320(b)(2) is no longer the adjustment that would result from deeming those hospitals to have the disproportionate share percentage that would yield their operating disproportionate share adjustment. We therefore proposed to revise the regulation so that the capital disproportionate share adjustment for these hospitals is once again consistent with the original rationale for making the adjustment.

We proposed to revise the regulation so that the capital disproportionate share adjustment for these hospitals changes automatically with any future revisions of the operating disproportionate share formula. We thus proposed to revise § 412.320(b)(2) to provide that the capital disproportionate share adjustment for eligible hospitals is the adjustment that results from deeming those hospitals to have the disproportionate share percentage that would yield their operating disproportionate share adjustment.

Comment: We received one comment on the proposed change. The commenter pointed out that, while it is understandable to provide that the capital disproportionate share adjustment will change automatically with revisions to the operating disproportionate share formula, the reduction in the disproportionate share adjustment from 14.16 percent in FY 1993 to 12.14 percent in FY 1994 will disadvantage disproportionate share hospitals, who are generally large teaching hospitals and who traditionally treat the poor.

Response: As explained above, a 14.16 percent disproportionate share adjustment for these hospitals is no longer consistent with the results of the changes at section 1886(d)(5)(F)(vii) of the Act. Furthermore, maintaining the adjustment at 14.16 percent would give these hospitals an advantage in their treatment under the capital prospective payment system in comparison to their treatment under the operating prospective payment system. This is because, without the change that we proposed to § 412.320(b)(2), these hospitals would receive payment based on a disproportionate share percentage of 65.4, while at the same time receiving operating payments equivalent to having a disproportionate share percentage of 56.6. We do not believe that such a disparity is appropriate.

We are therefore making all of the above changes as proposed. For FY 1994, this provision will result in a disproportionate share adjustment of 12.14 percent.

The additional capital disproportionate share payments to these hospitals will continue to be made at the same time that the additional operating disproportionate share payments are made, that is, as the result of application for these payments under § 412.106(c)(2).

VI. Changes for Hospitals Excluded From the Prospective Payment System

A. Limitation of Exclusions for Distinct-Part Hospital Units (§ 412.25)

Since the inception of the prospective payment system for hospital inpatient services, certain types of specialty-care hospitals and hospital units have been excluded from that system under section 1886(d)(1)(B) of the Act. The hospitals currently excluded are psychiatric, rehabilitation, children's, long-term care, and cancer hospitals. The units currently excluded are psychiatric or rehabilitation units of hospitals that are distinct part units (as defined by the Secretary) of hospitals paid under the prospective payment system.

In the proposed rule, we discussed several longstanding policies. We have always believed it is self-evident that when an entire hospital is excluded from the prospective payment system, a separate component of the hospital cannot qualify for a second and distinct exclusion as a psychiatric or rehabilitation unit. To allow a second exclusion would be redundant, since the entire institution is already excluded from the prospective payment system. We also indicated that it has been our policy that a hospital that does not otherwise qualify as an excluded hospital cannot obtain exclusion from the prospective payment system in its entirety by allocating all its beds between an excluded psychiatric and an excluded rehabilitation unit. Thus, exclusion of a unit is available only to units of institutions that have at least enough beds subject to payment under the prospective payment system to meet the requirements of § 413.24(c) regarding adequacy of cost information and the related instructions in sections 2336.1 (C) and (D) of the Medicare Provider Reimbursement Manual (HCFA Pub. 15–1). Finally, we stated that it has been our view that only one unit of each type (psychiatric or rehabilitation) can be approved in any hospital. However, these policies are not set forth explicitly in the regulations.

Because the current regulations are not explicit on these points, some institutions have expressed interest in reorganizing themselves in novel ways in order to obtain types of exclusions not contemplated by the statute. For example, representatives of an excluded psychiatric hospital may seek to set aside a part of the hospital for providing rehabilitation care to non-psychiatric patients, and may request exclusion of that facility as a rehabilitation unit. Since the facility is currently excluded from the prospective payment system in its entirety, the ceiling for the hospital encompasses costs associated with the unit. Thus, it would be inappropriate to apply a target amount to the unit that is different from (and higher than) the rate for the hospital as a whole (including the unit). If we were to allow a unit's ceiling to be artificially inflated in this way, we would diminish the incentive for efficient operation that is provided by the ceiling. Such an action would be at cross purposes with the intent of section 1886(b) of the Act.

In other cases, a hospital may wish to organize itself into two components, one that could qualify as an excluded rehabilitation unit and one that could qualify as an excluded psychiatric unit. Thus, a hospital that does not qualify as a psychiatric, rehabilitation, or other type of excluded hospital nevertheless could be excluded in its entirety from the prospective payment system. We believe that if a hospital does not qualify for exclusion from the prospective payment system as an excluded hospital, then some part of the hospital should be subject to payment under the prospective payment system. Accordingly, we would not approve exclusion of all units of a hospital if, as a result, all of the hospital beds would be excluded.

Finally, as noted above, a hospital may seek to set up multiple excluded units of the same type and obtain a separate target amount for each unit, thus defeating the purpose of the ceiling. The target amount is based on a system of averages and is intended to apply to all discharges of a hospital or unit, thereby encouraging the efficient delivery of needed health care.

To avoid the kinds of distortions in payment that would occur if we granted these types of exclusions, we proposed to revise the regulations concerning common requirements for excluded distinct part hospital units to state explicitly the policies described above, as they have been applied since the inception of the rate-of-increase ceiling. Specifically, we proposed to revise § 412.25 to allow a psychiatric or rehabilitation unit to be excluded only if the unit is a component of a hospital that is under the prospective payment system, and the hospital has a sufficient number of beds that are subject to the prospective payment system to permit the provision of adequate cost information as specified in § 413.24(c). We also proposed to revise the regulations to state explicitly that only one unit of each type (psychiatric or rehabilitation) is allowed in each hospital. We emphasized that these revisions would merely codify existing policy, and do not represent new substantive policies that would be effective only prospectively.

We received two comments on the proposal to revise § 412.25(a)(1) to state explicitly that a hospital unit is not eligible for a separate exclusion if it is part of a hospital that is eligible for exclusion in its entirety from the prospective payment system.

Comment: One commenter favored the proposed change, but stated that it should apply only to components of already excluded hospitals, not to hospitals that operate in separate buildings that also house other separately licensed and participating hospitals.

Response: We agree with this commenter, and do not plan to prohibit separate exclusions for separately licensed and participating hospitals that are housed in separate parts of the same building. For example, if a rehabilitation hospital and a psychiatric hospital each lease a different wing or floor of the same structure, but each has its own separate State license and Medicare participation agreement, each may be excluded if it meets applicable requirements.

Comment: One commenter stated that the proposal would discourage the efficient use of health care facilities in certain situations, citing the example of a community in which a psychiatric hospital has too many beds, while there is also a local shortage of rehabilitation beds. Under these circumstances, the commenter believes the most efficient use of space would require the psychiatric hospital to set up a separate rehabilitation unit, an option that would not be available under our proposal. The commenter also expressed the view that we have no statutory authority to prohibit the establishment of excluded units within already excluded hospitals.

Response: We agree that hospitals should be able to reorganize their operations to meet changing community needs, but we do not believe that the proposal would restrict that ability significantly. For example, in the hypothetical situation described by the commenter, the hospital would not be prohibited from participating as a general hospital that would have both an excluded psychiatric and an excluded rehabilitation unit, as well as the acute care capacity that will be needed, at least occasionally, by the patients of each unit. We also do not believe the proposal exceeds our authority to administer the exclusion provisions of the law; the statute confers broad discretion on the Secretary to define the circumstances under which a unit may be excluded.

We also received one comment on our proposal to revise § 412.25(a)(1) to state that a hospital unit cannot be excluded if its exclusion would leave the hospital with insufficient beds under the prospective payment system to allow the provision of adequate cost information.

In addition, we note that we are making one clarifying change in the proposed language for § 412.25(a)(1)(ii). The proposed regulations text provides that a unit of a hospital may be excluded if among other things, the hospital is not "eligible for" exclusion in its entirety. The purpose of the proposal is to avoid duplicating existing prospective payment system exclusions; it is not intended to apply to situations in which a hospital theoretically could meet the exclusion criteria and obtain an exclusion, but has not actually done so. To clarify this point we have revised the proposed regulations text to make clear that a unit cannot be excluded if it is part of an institution that is excluded in its entirety from the prospective payment system.

Comment: A commenter expressed support for the proposed change, stating that a hospital should not be allowed to have an excluded unit unless at least some part of the hospital is subject to the prospective payment system. However, the commenter stated that the "sufficient number of beds" guideline is too vague, and recommended that we adopt a specific numerical standard that could be used in a hospital's planning process.

Response: We understand the commenter's concern. However, we also are concerned that a uniform numerical standard for all hospitals might unnecessarily restrict some hospitals' flexibility to allocate beds to excluded and nonexcluded facilities, and believe that individual intermediaries are better able to determine how many prospective payment system beds must be maintained at each hospital to allow accurate cost reporting. Therefore, we have not revised the regulations to include a specific numerical standard.

Three comments were received on the proposal to revise § 412.25(d) to allow only one excluded unit of each type in any hospital.

Comment: A commenter asked for confirmation that the proposed revision to § 412.25(d) would only preclude multiple units of the same type, and would not prohibit a hospital from having two units of different types, such as a rehabilitation and a psychiatric unit.

Response: The commenter's view is correct; any hospital having units that meet the exclusion criteria would be free to set up both a rehabilitation unit and a psychiatric unit.

Comment: Two commenters stated that the proposed revision to § 412.25(d) would discourage some hospitals from adding needed specialty programs, such as a geriatric psychiatric program. One commenter reasoned that this would occur because those programs could be more costly than current programs and might cause the unit's cost to exceed the TEFRA target amount. To prevent this result, the commenter suggested that hospitals be allowed exclusions for

multiple units of each type, so that a new unit could be established, and a separate target amount set, for each added program. Another commenter stated that the exclusion provisions of the Medicare law were designed to exclude specialty hospital care from the prospective payment system, and argued that the proposal would be inconsistent with this objective.

Response: We do not agree that the commenters' concerns justify allowing multiple units and target amounts. On the contrary, we are concerned that such a policy could add an unintended incentive to facilities to fragment their operations in an effort to maximize payment. In particular, we do not believe the proposal is inconsistent with the exclusion provisions of the law (section 1886(d)(1)(B) of the Act). Those provisions do not mandate exclusion of all varieties of specialty care, but only require that specific types of dedicated units (psychiatric and rehabilitation units) be excluded. Our proposal would not further restrict the types of units to be excluded but would only prohibit the establishment of multiple units offering variations of the same types of care. Therefore, we are not making any revisions in this final rule based on this comment.

In addition, we received comments relating to provisions for which we had not proposed changes, and to changes that were adopted through previous publications. Because these comments do not relate to the provisions of the proposed rule, we have not responded to them in this document.

B. Ceiling on the Rate of Increase in Hospital Inpatient Costs—Rate-of-Increase Percentages and Update Factors (§ 413.40(c))

Section 13502 of Public Law 103-66 amended section 1886(b)(3)(B) of the Act, which provides the applicable rate-of-increase percentages to be applied to the target amounts for hospitals and hospital distinct part units excluded from the prospective payment system.

The applicable rate-of-increase percentage for the cost reporting period beginning during FY 1994 is the market basket percentage increase adjusted as follows. First, the "update adjustment percentage" is calculated by determining the percentage by which the hospital's costs subject to the ceiling exceed the hospital's ceiling (target amount times Medicare discharges) for the 12-month cost reporting period beginning in FY 1990.

Then, the applicable reduction is calculated as the lesser of 1 percentage point or the result of subtracting the hospital's "update adjustment percentage" from 10 percent.

The rate of increase percentage is the market basket percentage increase less the applicable reduction, except in the following situations:

- If the hospital's "update adjustment percentage" is 10 percent or more, there is no applicable reduction and its rate-of-increase percentage is the percentage increase in the hospital market basket.
- If a hospital's FY 1990 rate-of-increase ceiling was greater than cost subject to the ceiling, the rate-of-increase percentage is the percentage increase in the hospital market basket minus 1 percentage point.
- If a hospital did not have a 12-month cost reporting period beginning in FY 1990 that was subject to the rate-of-increase limitation, its applicable rate-of-increase percentage is the percentage increase in the hospital market basket minus one percentage point.

For cost reporting periods beginning in FY 1995 through 1997, the hospital's update adjustment percentage is its "update adjustment percentage" from the previous year plus the previous year's applicable reduction. The hospital's applicable reduction and applicable rate-of-increase percentage are then determined in the same manner as for FY 1994. The fiscal intermediary is to determine the applicable rate-of-increase percentage based on the methodology described above. Examples of how this provision applies in determining the applicable rate-of-increase percentages are as follows:

Example 1

Cost reporting period beginning in FY 1990:	
Allowable inpatient operating costs	$10,600
Rate-of-increase ceiling	$10,000
Percentage by which costs exceed ceiling)	6.00%
FY 1994:	
Update adjustment percentage (percentage by which costs exceed ceiling)	6.00%
Difference between 10% and update adjustment percentage	4.00%
Applicable reduction (lesser of 1% and the difference between 10% and the update adjustment percentage)	1.00%
Applicable rate-of-increase percentage is the market basket percentage increase minus the applicable reduction of 1%.	
FY 1995:	
Update adjustment percentage (last year's update adjustment percentage plus last year's applicable reduction)	7.00%
Difference between 10% and update adjustment percentage	3.00%
Applicable reduction (lesser of 1% and the difference between 10% and the update adjustment percentage)	1.00%
Applicable rate-of-increase percentage is the market basket percentage increase minus the applicable reduction of 1%.	
FY 1996:	
Update adjustment percentage (last year's update adjustment percentage plus last year's applicable reduction)	8.00%
Difference between 10% and update adjustment percentage	2.00%
Applicable reduction (lesser of 1% and the difference between 10% and the update adjustment percentage)	1.00%
Applicable rate-of-increase percentage is the market basket percentage increase minus the applicable reduction of 1%.	
FY 1997:	
Update adjustment percentage (last year's update adjustment percentage plus last year's applicable reduction)	9.00%
Difference between 10% and update adjustment percentage	1.00%
Applicable reduction (lesser of 1% and the difference between 10% and the update adjustment percentage)	1.00%
Applicable rate-of-increase percentage is the market basket percentage increase minus the applicable reduction of 1%.	

Example 2

Cost reporting period beginning in FY 1990:	
Allowable inpatient operating costs	$10,800
Rate-of-increase ceiling	$10,000
Percentage by which costs exceed ceiling	8.00%
FY 1994:	
Update adjustment percentage (percentage by which costs exceed ceiling)	8.00%
Difference between 10% and update adjustment percentage	2.00%
Applicable reduction (lesser of 1% and the difference between 10% and the update adjustment percentage)	1.00%
Applicable rate-of-increase percentage is the market basket percentage increase minus the applicable reduction of 1%.	
FY 1995:	
Update adjustment percentage (last year's update adjustment percentage plus last year's applicable reduction)	9.00%
Difference between 10% and update adjustment percentage	1.00%
Applicable reduction (lesser of 1% and the difference between 10% and the update adjustment percentage)	1.00%
Applicable rate-of-increase percentage is the market basket percentage increase minus the applicable reduction of 1%.	

FY 1996:	
Update adjustment percentage (last year's update adjustment percentage plus last year's applicable reduction)	10.00%
Because the update adjustment percentage is at least 10%, the applicable rate-of-increase percentage for FY 1996 and FY 1997 is the market basket percentage increase.	

Example 3

Cost reporting period beginning in FY 1990:	
Allowable inpatient operating costs	$10,950
Rate-of-increase ceiling	$10,000
Percentage by which costs exceed ceiling	9.50%
FY 1994:	
Update adjustment percentage (percentage by which costs exceed ceiling)	9.50%
Difference between 10% and update adjustment percentage	0.50%
Applicable reduction (lesser of 1% and the difference between 10% and the update adjustment percentage)	0.50%
Applicable rate-of-increase percentage is the market basket percentage increase minus the applicable reduction of 0.50%.	
FY 1995:	
Update adjustment percentage (last year's update adjustment percentage plus last year's applicable reduction)	10.00%
Because the update adjustment percentage is at least 10%, the applicable rate-of-increase percentage for FY 1995 through FY 1997 is the market basket percentage increase.	

Example 4

Cost reporting period beginning in FY 1990:	
Allowable inpatient operating costs	$9,000
Rate-of-increase ceiling	$10,000
Percentage by which costs exceed ceiling	0.00%
FY 1994:	
Applicable reduction	1.00%
Because costs did not exceed the rate-of-increase ceiling in FY 1990, the applicable rate-of-increase percentage for FY 1994 through FY 1997 is the market basket percentage increase minus 1%.	

For cost reporting periods beginning in FY 1998 and following, the applicable rate-of-increase percentage is the percentage increase in the hospital market basket.

We are revising proposed § 413.40(c)(2) by adding paragraphs (v) and (vi) to set forth the new rate-of-increase percentage provisions. We are also revising the proposed § 413.40(a)(3) by adding the definition of "update adjustment factor."

C. Ceiling on the Rate of Increase in Hospital Inpatient Costs—Adjustments (§ 413.40(g))

1. Proposed Rule Provisions

The rate-of-increase ceiling is based on an assumption that, except for inflation, a provider's year-to-year inpatient operating costs should remain comparable to its base year. Each hospital's target amount is adjusted annually, at the beginning of its cost reporting period, by an applicable rate-of-increase percentage for the Federal fiscal year in which the cost reporting period begins. Section 1886(b)(4)(A) of the Act authorizes the Secretary to grant an exemption from, or an adjustment or exception to, the rate-of-increase ceiling where events beyond the hospital's control or extraordinary circumstances create a distortion in the hospital's inpatient operating costs.

To implement section 1886(b)(4)(A) of the Act, regulations at § 413.40 provide that HCFA may adjust a hospital's operating costs that were considered in establishing a base year cost per case for purposes of determining the target amount, including the period subject to the limit and the hospital's base period. Section 413.40(g) provides that such an adjustment may be made only if the hospital exceeds its ceiling for the cost reporting period and only to the extent the hospital's costs are reasonable, attributable to the circumstances specified as creating the cost distortion, and are verified by the intermediary.

In the August 30, 1991 final rule (56 FR 43232), we set forth our policy for target amount adjustments for significant wage increases. Effective with cost reporting periods beginning on or after April 1, 1990, significant increases in wages since the base period are recognized as a basis for an adjustment in the target amount under § 413.40(g).

To qualify for an adjustment, the excluded hospital or hospital unit must be located in a labor market area that is determined to have an average hourly wage that increased significantly more than the national average hourly wage between the hospital's base period and the period subject to the ceiling. We use the hospital wage index for prospective payment hospitals to determine the rate of increase in the average hourly wage in the labor market area. For a hospital to qualify for an adjustment, the increase in its wage index value based on 1982 wage data and its wage index value based on the latest applicable wage data must be at least 8 percent. If the hospital's base period begins in FY 1984 or later, the increase in the wage index value based on 1984 data and the wage index value based on the latest applicable wage data must be at least 8 percent. Sections 413.40(g)(4)(A) and (B) specify that 1988 wage data is to be used for comparisons of wage index values to those based on 1982 or 1984 wage data. Since we will be updating the wage index information yearly, we are replacing the specific requirements based on 1988 wage data with more general provisions based on a comparison of the wage index based on wage survey data collected for the cost reporting period subject to the ceiling to the wage index based on wage survey data collected for the base year cost reporting period. If survey data are not available for one (or both) of the cost reporting periods used in the comparison, the wage index based on the latest available survey data collected prior to that cost reporting period will be used. For example, to make the comparison between a 1983 base period and a hospital's cost reporting period beginning in FY 1992, we would use the rate of increase between the wage index based on 1982 wage data and the wage index based on the FY 1990 data, since the FY 1990 data are the most recent data that are currently available. Further, the comparison is made without regard to geographic reclassifications made by the MGCRB under sections 1886(d)(8) and (10) of the Act. Therefore, the comparison is made based on the wage index value of the labor market area in which the hospital is actually located.

The geographic areas in which the percentage difference in wage indexes was sufficient to qualify for a wage index adjustment are listed in Table 10 of section V of the addendum to this final rule. The table is constructed with old MSAs instead of the revised MSAs effective October 1, 1993 because current adjustment requests are for years prior to FY 1994.

We determine the amount of the adjustment for wage increases by considering three factors for the time between the base period and the period for which an adjustment is requested: The rate of increase in the hospital's average hourly wage; the rate of increase in the average hourly wage in the labor market area in which the hospital is located; and, the rate of increase in the national average hourly wage for hospital workers. The adjustment is limited to the amount by which the lower of the hospital's or the labor market area's rate of increase in average hourly wages significantly exceeds the national increase (that is, exceeds the national rate of increase by more than 8 percent). For purposes of computing the adjustment, the relative rate of increase

in the average hourly wage for the labor market area is assumed to have been the same over each of the intervening years between the wage surveys.

To determine the rate of increase in the national average hourly wage, we use the average hourly earnings (AHE) component of the wages and salaries portion of the market basket. This measure is derived from the 1982-based market basket since the 1987-based market basket uses the employment cost index (ECI) for hospital workers as the price proxy for this component. Unlike the AHE, the ECI for hospital workers can be measured historically only back to 1986. In addition, the ECI does not adjust for skill-mix shifts and, therefore, measures only the change in wage rates per hour.

The average hourly earnings for hospital workers as measured by the market basket show the following increases:

1983 = 8.4 percent
1984 = 5.6 percent
1985 = 5.4 percent
1986 = 4.1 percent
1987 = 4.7 percent
1988 = 6.5 percent
1989 = 6.9 percent
1990 = 5.6 percent
1991 = 5.6 percent
1992 = 4.8 percent
1993 = 4.2 percent
1994 = 4.8 percent

We use the following methodology to determine if an adjustment for significant wage increases is appropriate:

Step 1: Compare the hospital's rate of increase in average hourly wages to the rate of increase in the labor market area in which the hospital is located. The hospital's rate of increase is calculated by dividing its average hourly wage in the year for which the adjustment is requested by its average hourly wage in the base year. The rate of increase in the labor market area is computed by multiplying the cumulative percentage increase in the AHE for hospital workers by the applicable percentage change in the wage index. The lower of the two rates of increase will be used in Step 3.

Step 2: Determine the threshold for the adjustment. The threshold is equal to the cumulative percentage increase in the AHE for hospital workers over the period in question multiplied by 1.08.

Step 3: Subtract the amount determined in Step 2 from the lower of the two amounts determined in Step 1. This result is the percentage increase that is considered significantly above the increase that is accounted for by the update factor.

Step 4: Determine the proportion of the hospital's operating costs that is attributable to wages and fringe benefits. Adjust this proportion of the hospital's target amount to account for the wage increase by multiplying it by the percentage increase determined in Step 3. As with other adjustments under § 413.40(g), the adjustment is made only to the extent the hospital's costs are in excess of the target amount.

Since we provide a specific methodology to be used to make the wage adjustment, we authorized the intermediary to make the determinations on these requests for an adjustment due to a significant wage increase.

We received no comments on the methodology change described above. Therefore, we are adopting this change as proposed.

2. Changes Based on New Legislation

Section 13502 also amended section 1886(b)(4)(A) of the Act by adding a new subsection (ii) that provides that the payment reductions resulting from the hospital receiving less than market basket as its percentage increase will not be considered in determining adjustments under § 413.40(g). In determining an adjustment, the applicable rate-of-increase percentage for the cost reporting period or periods (FY 1994 through FY 1997) will be deemed to be the percentage increase in the hospital market basket. That is, in determining the amount of the adjustment a hospital may warrant under the regulatory adjustment provisions, the adjustment can not exceed the difference between the allowable Medicare inpatient operating costs and the rate-of-increase ceiling adjusted for the payment reduction. For example, a rehabilitation hospital's inpatient operating costs were $1,800,000 and the ceiling (after application of an update of market basket minus 1 percentage point) was $1,700,000. The costs in excess of the ceiling is $100,000. If the hospital had been awarded the market basket increase, the ceiling would have been $1,785,000 and the hospital's inpatient operating costs would have exceeded the ceiling by $15,000. Therefore, the maximum adjustment the hospital may qualify for under this provision is $15,000 and not the $100,000 by which the hospital's inpatient operating costs actually exceed the ceiling.

We are adding new § 413.40(g)(5) to implement the adjustment restriction on payment reductions resulting from the rate-of-increase percentage determination.

D. Technical Changes Regarding the Ceiling on the Rate of Increase in Hospital Inpatient Costs (§ 413.40)

We proposed several technical changes to the regulations in § 413.40, which concern the ceiling on the rate of increase in hospital inpatient costs. These changes are necessary to define terms, clarify current provisions, correct citations, and remove obsolete material that applies to cost reporting periods for which a final notice of amount of program reimbursement (NPR) has long since been issued.

The specific changes we proposed to make are as follows:

• *Definitions.* In § 413.40, concerning the ceiling on the rate of increase in hospital inpatient costs, the terms "ceiling" and "target amount" heretofore have been used interchangeably. Although the terms are closely related, they have different meanings. Therefore, to eliminate any possible confusion, we proposed to add a new paragraph (a)(3) to define "target amount" and "ceiling." "Target amount" means the per discharge (case) limitation, derived from the hospital's allowable net Medicare inpatient operating costs in the hospital's base year, and updated for each subsequent hospital cost reporting period by the appropriate annual rate-of-increase percentage. "Ceiling" is the aggregate upper limit on the amount of a hospital's net Medicare inpatient operating costs that the program will recognize for payment purposes. For each cost reporting period, the ceiling is determined by multiplying the updated target amount for that period by the number of Medicare discharges during that period.

In addition, for the convenience of the reader, we proposed to define "date of discharge," "market basket index," "net inpatient operating costs," "rate-of-increase percentage," and "update factor" in the new paragraph (a)(3).

"Date of discharge" is the earliest of the following dates:

(1) The date the patient has exhausted Medicare Part A hospital inpatient benefits (including the election to use lifetime reserve days) during his or her spell of illness;

(2) The date the patient is formally released as specified in § 412.4(a)(1) of this chapter;

(3) The date the patient is transferred to another facility; or

(4) The date the patient dies.

"Market basket index" is HCFA's projection of the annual percentage increase in hospital inpatient operating costs. The market basket index is a wage and price index that incorporates

weighted indicators of changes in wages and prices that are representative of the mix of goods and services included in the most common categories of hospital inpatient operating costs subject to the ceiling.

"Net inpatient operating costs" include the costs of routine services, ancillary services, and intensive care services incurred by a hospital in furnishing covered inpatient services to Medicare beneficiaries. Net inpatient operating costs exclude capital-related costs, the costs of approved medical education programs, and heart, kidney, and liver acquisition costs incurred by approved transplantation centers. These costs are identified and excluded from inpatient operating costs before the application of the ceiling.

"Rate-of-increase percentage" is the percentage by which each hospital's target amount from the preceding fiscal year will be increased. "Update factor" is the decimal equivalent of the rate-of-increase percentage. The update factor is the value by which a hospital's target amount for the preceding year is multiplied in order to determine the target amount for the following year. For example, if the rate-of-increase percentage for a year is 2.7 percent, the update factor for that year is 1.027.

In conjunction with these changes, we proposed to make conforming changes to §§ 413.40(c) and (d). Specifically, in § 413.40(c), concerning costs subject to the ceiling, we proposed to remove the terms "target rate" and "target rate percentage," and replace these terms with "target amount" and "rate-of-increase percentage," respectively. In some instances, the terms "target amount," "ceiling" and "target rate percentage" were used interchangeably in paragraph (c); therefore, we also proposed to replace these terms with the appropriate terms. We proposed to delete current paragraph (c)(2), since the date of discharge would be defined in paragraph (a)(3). In current paragraph (c)(3) (which we would redesignate as paragraph (c)(2)), we proposed to include the update factors with the rate-of-increase percentages for FYs 1986 through 1988 since, as defined earlier, the update factor is the decimal equivalent of the rate-of-increase percentage. We also proposed to remove current paragraph (c)(3)(ii) since the market basket index would be defined in paragraph (a)(3), and in current paragraph (c)(3)(i)(D), change the reference to paragraph (c)(3)(ii) to read (a)(3).

In paragraph (d) of § 413.40, concerning the application of the target amount in determining the amount of payment, we proposed to replace the terms "target amount" and "reimbursement" with the appropriate terms. In paragraph (d)(1)(i) of § 413.40, we proposed to add a reference to paragraph (a)(3).

• *Clarifications.* In § 413.40(a)(1), concerning the ceiling on the rate of increase in hospital inpatient costs, we proposed to clarify that the ceiling applies to the operating costs incurred by a hospital in furnishing inpatient hospital services "to Medicare beneficiaries," and we proposed to change the term "reimbursement" to read "the amount of Medicare payment."

In § 413.40(b)(1), concerning the cost reporting periods subject to the rate-of-increase ceiling, we proposed to clarify the policy on the base period for new excluded units. Specifically, the base period for a newly established excluded distinct part unit is the first cost reporting period of at least 12 months following the unit's certification to participate in the Medicare program. We also proposed to divide paragraph (b)(1) into 3 subparagraphs, for ease of use.

In § 413.40(b)(3), concerning cost reporting periods of other than 12 months, we proposed to clarify that the ceiling does not apply to cost reporting periods of fewer than 12 months that occur in conjunction with a change in operations of the facility, as defined in paragraph (b)(1)(iii). The ceiling will apply to cost reporting periods of fewer than 12 months that result solely from the approval of a hospital's request for a change in accounting cycle, as specified in § 413.24(f)(3).

We proposed to remove §§ 413.40 (c)(1)(ii) and (c)(1)(iii), since those components of net inpatient operating cost that are subject to, and those that are excluded from, the application of the ceiling, are now defined in paragraph (a)(3).

In § 413.40(e)(1), concerning the timing of a hospital's request for an adjustment to the amount of payment allowed under the rate-of-increase ceiling, we proposed to clarify our policy on the deadline for requests for an adjustment to the ceiling.

In § 413.40(e)(4), concerning notification and review of a hospital's request regarding a payment adjustment, we proposed to clarify that the right to review under subpart R of part 405 is contingent upon the intermediary's issuance of a notice of amount of program reimbursement that disallows costs for which the hospital had requested an adjustment, as specified in § 405.1801(a), which refers to pertinent definitions, and § 405.1835, which addresses the provider's right to a hearing before the Provider Reimbursement Review Board (PRRB).

In § 413.40(e)(6), concerning a hospital's request for a review of a decision on a request for a payment adjustment, we proposed to change the term "reconsideration" to "review" in order to distinguish the review process from the formal reconsideration process.

In § 413.40(f)(1), concerning exemptions for new hospitals from the rate-of-increase ceiling, we proposed to redesignate paragraphs (f)(1)(ii) and (f)(2) as (f)(2) and (f)(3), respectively, and add new paragraphs (f)(1)(ii) and (f)(1)(iii) to clarify that the hospital's intermediary must notify a hospital of its exempt status, and to clarify that the right to review under subpart R of part 405 is contingent upon the intermediary's issuance of a notice of amount of program reimbursement for a cost reporting period that is affected by the intermediary's exemption determination to the financial detriment of the hospital, as specified in § 405.1801(a), which refers to pertinent definitions, and § 405.1835, which addresses the provider's right to a Board hearing. In the redesignated paragraph (f)(2), we proposed to clarify that a new distinct part unit does not qualify for an exemption unless the unit is located in an acute care hospital that, were it an excluded hospital, would qualify for the new hospital exemption. We also proposed to remove a redundant reference to the base period for newly established excluded units.

In § 413.40(i)(3), we proposed to add the term "update factor" to follow the term "rate-of-increase percentages" to be consistent with the changes in paragraph (c)(3) that clarify the methodology for updating the target amount.

• *Citation corrections.* In §§ 413.40(a)(2)(ii), paragraph (b)(1)(i), and redesignated paragraph (f)(2), we proposed to correct a reference to § 412.32 and replace it with § 412.30 since § 412.32 was removed in the September 1, 1992, final rule (see 57 FR 39821). In § 413.40(a)(2)(ii), we proposed to remove a reference to § 412.94(b) since § 412.94 was removed in the September 4, 1990, final rule (see 55 FR 36070). In § 413.40(f)(2), we also proposed to revise references to paragraph (f)(1)(i) to read (f)(1).

In § 413.40(f)(3), concerning exemptions for a risk-basis HMO, we proposed to correct a reference to § 417.250(c) and replace it with § 417.401 since § 412.250 was removed as an obsolete provision (see 56 FR 51985, October 17, 1991).

• *Removal of obsolete material.* In § 413.40(a)(1), concerning the ceiling on

the rate of increase in hospital inpatient costs, we proposed to delete a reference to costs that are included in FY 1982 base years. We also proposed to eliminate the reference to "exceptions to" the ceiling to reflect the clarifying changes made to §§ 413.40 (g) and (h) (see 56 FR 43231 and 43242, August 30, 1991).

In § 413.40(b)(3), concerning cost reporting periods of other than 12 months, we proposed to remove obsolete language that refers to prorating percentage rates of increase across fiscal years.

In current § 413.40(c)(5) (which we proposed to redesignate as paragraph (c)(4)), concerning the applicable update factor, we proposed to remove references to the proration of rate-of-increase percentages across years since these provisions ceased as of January 3, 1984 (see 49 FR 336). We also proposed to remove a now redundant reference to the development and proration of rate-of-increase percentages, and substitute language clarifying the policy on the application of rate-of-increase percentages to target amounts.

In § 413.40(d)(1)(ii), concerning the general application of the target amount in determining the amount of payment, we proposed to add references to paragraphs (d)(2) and (d)(3), and remove an obsolete reference to cost reporting periods beginning prior to October 1, 1983. In conjunction with these changes, we proposed to remove paragraphs (d)(1)(iii) and (d)(1)(iv).

In § 413.40(d)(2), concerning inpatient operating costs that are less than or equal to the ceiling, we proposed to remove paragraph (d)(2)(iii), which contains an obsolete reference to § 413.30.

In § 413.40(d)(3), concerning inpatient operating costs that are greater than the ceiling, we proposed to remove all references to cost reporting periods beginning on or after October 1, 1982 and before October 1, 1991.

Finally, we proposed to remove and reserve § 413.40(h), concerning the target amount revisions for the Medicare Catastrophic Coverage Act of 1988 (Public Law 100–360), since these regulations are now obsolete.

Comment: One commenter stated that the language in the preamble and regulations is unclear regarding appeal rights to the PRRB for disallowed costs. The proposed § 413.40(e)(4)(ii) states that a provider could not appeal an adjustment until a notice of program reimbursement has been issued that "disallows costs for which the hospital had requested an adjustment." The commenter expressed concern that the intent may be to preclude a provider from pursuing through the appeal process both disallowed costs and those denied in an adjustment request.

Response: The confusion regarding the intent of the regulations may come from the term "disallowed costs." For purposes of the review process described in § 413.40(e)(4), the term "disallowed costs" encompasses both costs that have been disallowed by the fiscal intermediary as unreasonable and therefore, will not be reimbursed by Medicare regardless of the TEFRA limits, and those costs that are allowable but were not reimbursed since they exceeded the TEFRA target amount. These latter costs are the subject of adjustment requests. Hospitals have the right to appeal both costs disallowed by the fiscal intermediary as well as costs denied through the adjustment process, providing an NPR has been issued.

Comment: One commenter recommended that the regulations be modified to assure that hospitals be given detailed explanation by the fiscal intermediary upon notification from HCFA regarding decisions on adjustment requests. The commenter referred to the regulations requiring that HCFA fully explain adjustment decisions but indicated that some fiscal intermediaries fail to pass this information on to the hospital.

Response: The regulations already state at § 413.40(e)(4) that "the intermediary notifies the hospital of the decision, including a full explanation of the grounds for the decision." We believe this language clearly indicates the intermediaries' responsibility regarding notification of adjustment decisions to providers.

Two commenters addressed other aspects of our adjustment policy that were not the subject of the proposed rule, specifically the provision for additional payment when hospital inpatient operating costs exceed the rate-of-increase limitation and the 8 percent threshold for wage increase adjustments. Both of these issues were addressed in detail in our August 30, 1991, final rule at 56 FR 43229 and 43233, respectively.

We received no other comments on these proposed technical changes and are adopting all of them as proposed.

E. Related Technical Changes (§§ 412.62, 412.63, 412.73 and 412.98)

As proposed, we are making minor technical changes to the regulations in §§ 412.62, 412.63, 412.73 and 412.98 to reflect the numbering and terminology changes in § 413.40.

VII. Other ProPAC Recommendations

As required by law, we reviewed the March 1, 1993 report submitted by ProPAC to Congress and gave its recommendations careful consideration in conjunction with the proposals set forth in the proposed rule. We also responded to the individual recommendations in the proposed rule. The comments we received on the treatment of the ProPAC recommendations are set forth below along with our responses to those comments. However, if we received no comments from the public concerning a ProPAC recommendation or our response to that recommendation, we have not repeated the recommendation and response in the discussion below. Recommendations 5, 9, and 10 concerning the update factors for inpatient operating costs are discussed in Appendix C to this final rule. Recommendations 6 and 7 concerning the update factors for capital costs are discussed in Appendix D. Recommendation 16 concerning Medicare transfer payment policy is discussed in section IV of this preamble. The remaining recommendations on which we received comments are discussed below.

A. Controlling Spending Across Sites of Care (Recommendation 3)

Recommendation: ProPAC believes the Medicare program should continue to seek effective methods to control its total spending across all sites of care. Total Medicare spending is growing at rates much greater than can be explained by inflation and increases in the number of enrollees. The growth in spending is straining the resources of the Medicare trust funds, adding to the Federal deficit, and creating substantial financial burdens for Medicare beneficiaries.

Response in the Proposed Rule: We agree that controlling the rate of growth in health care spending both in the Medicare program and in the health care sector in general is of critical importance. The Medicare program has various mechanisms in place to stem the growth in spending for some services. For inpatient hospital services, the prospective payment system has been shown to slow the growth in Medicare spending compared with estimates of growth in program payments under reasonable cost reimbursement. The reform of Medicare physician payments, although recently enacted, has demonstrated a reduction in the growth of program expenditures in its first year. We are also developing a prospective payment system for outpatient services

that will provide the appropriate economic incentives to help control the growth of Medicare outpatient spending.

However, we acknowledge the need to extend these cost control methods to other providers and to control the growth in the volume of services provided. We are developing alternative payment systems for hospitals and units that are excluded from the prospective payment system, for skilled nursing facilities, and for home health agencies. The Medicare volume performance standards (MVPS) system is one mechanism available for controlling the volume of services provided. The MVPS provides physicians with incentives to control the volume of services they provide. Similar mechanisms for other services do not exist, although we continue to explore other means of controlling the growth in the volume of services provided, such as bundling payment for multiple services into a single payment.

Ultimately, the key to controlling spending across sites of care lies in the reform of the health care system. One of the goals of reforming health care is slowing the rate of increase in public and private health care costs and, thus, health care spending overall.

Comment: ProPAC continues to support our efforts to develop and implement policies to control Medicare spending, and agrees that health care reform may provide opportunity to control overall health care costs; however, at the same time, the Commission urges us to seek more immediate measures to control spending under the Medicare program.

Response: We believe that our response on this subject in the proposed rule continues to be appropriate.

B. Data for Evaluating Case-Mix Index Change Recommendation 8)

Recommendation: The Secretary should collect the data necessary to apportion case-mix index change into its real and upcoding components.

Response in the Proposed Rule: We agree with ProPAC that it would be desirable to separate case-mix index (CMI) change into its real and upcoding components. In the past, estimates of real CMI change and upcoding were based on a sample of medical records analyzed by the SuperPRO in its evaluation of PRO performance (SuperPRO is an organization of health care professionals whose responsibility is to provide HCFA with an independent, professionally recognized evaluation of PRO medical determinations). The Fourth Scope of Work for the SuperPRO is now under development, and we will take into account ProPAC's recommendations regarding the sampling scheme. However, we note that SuperPRO's mission is to improve the validity of PRO medical review decisions in accordance with our Health Care Quality Improvement Initiative (HCQII). The HCQII shifts the emphasis of PRO review activity from review of individual cases to the review of patterns of care and patterns of outcomes. As a result, it may no longer be possible for SuperPRO to collect the data necessary to analyze real CMI change. If this proves to be the case, the Uniform Clinical Data Set System (UCDSS) may be a means for collecting the necessary data elements to analyze CMI change. Assuming the data necessary for evaluating CMI change can be obtained through an analysis of a random sample of medical records, we believe that the data could be abstracted using the UCDSS. The UCDSS can be restructured, as necessary, to collect the type of variables needed to evaluate CMI change. The UCDSS is currently being pilot tested at 5 PRO sites. We do not plan to implement UCDSS on a nationwide basis before January 1995. We look forward to working with ProPAC to explore alternative methods of analyzing CMI change.

Comment: ProPAC supports the Secretary's efforts to investigate data sources necessary to apportion the case-mix index into its real and upcoding components. While the Uniform Clinical Data Set System appears promising for this purpose, ProPAC encourages the Secretary to consider modifying the SuperPRO's Fourth Scope of Work to provide for a sampling scheme that can provide this information.

Response: The SuperPRO contract expired July 1993. The purpose of the SuperPRO contract was to validate the accuracy of the individual medical review decisions and other individual review determinations made by the PROs under their HCFA contracts. With the implementation of the Health Care Quality Improvement Initiative (HCQII), the purpose of PRO case review has changed from identifying individual problem cases to identifying patterns of problems. As a result, the review no longer entails large medical record samples for each State; consequently, the alternative proposed is not viable. Nonetheless, HCFA will pursue other opportunities within HCQII to assist in the evaluation of case-mix index change.

C. Improving Outlier Payment Policy (Recommendation 14)

Recommendation: The Commission believes that the following changes should be made in the current policy for identifying outlier cases and determining outlier payments under the prospective payment system:

- In determining outlier payment, the increasing emphasis on cost outliers relative to day outliers should continue, with the goal of eliminating day outlier payment over three years;
- The cost outlier threshold should be a fixed dollar amount (adjusted for differences in area wages and cost of living) above the payment rate received by the hospital for each case, regardless of the DRG to which the case is assigned;
- Neither the estimated cost of the case nor the outlier payment amount should be adjusted to reflect the hospital's indirect medical education or disproportionate share status;
- The marginal cost factor for cost outliers should be increased to 80 percent;
- The outlier payment pool should be set at 6 percent; and
- The payment rate for cases in each DRG should reflect the anticipated percentage of outlier payments for that DRG.

ProPAC believes these changes would improve the effectiveness of outlier payment policy in protecting against the risk of large losses on some cases.

Response in the Proposed Rule: We continue to evaluate outlier payment policy in order to ensure that outlier payments are appropriately targeted at those cases that present the largest burden to hospitals. We are currently examining several possible refinements to outlier payment policy, including most of those recommended by the Commission.

The Commission first recommends that we continue to increase the emphasis on cost outlier cases relative to day outlier cases, with the goal of eliminating day outlier payments in 3 years. In our September 1, 1992, final rule, we made a major change to day outlier payment policy: we initiated the use of the arithmetic mean length of stay to determine the day outlier payment per diem, and we reduced the day outlier marginal cost factor to 55 percent. At that time, we made a commitment (at 57 FR 39782) to assess the full effects of that change before we established further changes in the day outlier payment methodology. As a result, we believe that it would be inappropriate to propose any further changes to day outlier payment policy at this time.

The Commission's second outlier policy recommendation concerns the formula for determining the cost outlier threshold. Currently, the cost outlier threshold is the greater of a fixed dollar amount (adjusted for differences in area wages and cost of living) or 2.0 times the DRG payment for the case. For some time, research performed by the RAND Corporation for HCFA has indicated that a modification of that formula would improve outlier payment equity. Under the modified methodology (now recommended by ProPAC as well), the cost outlier threshold would be the DRG payment for the case plus a fixed dollar amount (still adjusted for area wage levels and cost of living) for all cases, so that any case with a specified dollar loss would be eligible for outlier payment, regardless of its DRG classification. However, section 1886(d)(5)(A)(ii) of the Act mandates that the cost outlier threshold take its current form of the greater of a fixed multiple of the DRG payment rate or a fixed dollar amount. Therefore, until there is a statutory change, we are precluded from using the fixed loss threshold.

The Commission's third outlier recommendation concerns the method by which we adjust the charges of a case to cost in order to compare them to the cost outlier threshold. Currently, those charges are standardized to remove the effects of the indirect costs of medical education (IME) and the costs associated with serving a disproportionate share of low income patients (DSH). A cost-to-charge ratio is then applied in order to determine the operating and capital costs of the case to be compared to the cost thresholds. The resulting cost outlier payment amount is then subject to adjustment by the relevant IME and DSH payment adjustments that were used to determine the operating and capital costs of the case. The Commission advocates that we eliminate the standardization of the costs for IME and DSH, and that cost outlier payments should no longer be adjusted to reflect the additional IME and DSH costs. The effect of standardizing costs to remove the effects of IME and DSH is to increase the threshold faced by those hospitals.

The statute requires that we pay IME and DSH payments on outlier payments (under sections 1886(d)(5)(B)(i) and 1886(d)(5)(F)(ii) of the Act, respectively); therefore, we believe it would be inappropriate to implement the Commission's recommendation without a change to the statute. Moreover, we believe that changes to the outlier standardization method should be considered in conjunction with the overall level of the IME and DSH adjustments. In this regard, we believe that the IME adjustment to prospective payments for operating costs is currently too high when compared to the differences in Medicare costs associated with teaching activity. Since the elimination of the standardization would further increase payments to teaching hospitals, we believe it would be appropriate to make this change only in conjunction with a reduction in the level of the IME adjustment (see Recommendation 15 below).

The Commission's next two outlier recommendations concern the marginal cost factor for cost outlier payments and the percentage of outlier payments. Section 1886(d)(5)(A)(iii) of the Act specifies that the amount of day and cost outlier payments shall approximate the marginal cost of care beyond the threshold, while section 1886(d)(5)(A)(iv) of the Act specifies that the total amount of outlier payments for discharges in a fiscal year may not be less than 5 percent nor more than 6 percent of the total payments projected or estimated to be made based on DRG prospective payment rates for discharges in that year. We currently set the thresholds so that total estimated outlier payments are 5.1 percent of total estimated DRG payments. When determining the percentage of payments that will be made for outliers, it is important to balance the protection for losses associated with outlier cases with the reduction in the standardized amounts that hospitals receive for all cases. Increasing the outlier payment percentage would result in an offsetting reduction in the standardized amounts. Unless the outlier payment percentage were increased, an increase in the marginal cost factor for cost outlier cases (currently 75 percent) would necessitate more restrictive cost outlier thresholds or further reductions in day outlier payments. We believe the current outlier policies achieve an appropriate balance and are not proposing to make any changes at this time. However, we will re-examine the issues of the outlier payment percentage and marginal cost factor for cost outliers at the same time we evaluate the effects of the day outlier policy changes.

ProPAC's final recommendation concerns the financing of outlier payments through a DRG-by-DRG payment reduction, rather than the current system-wide reduction. We look forward to further discussions of this issue, but are not aware of a feasible method of implementing such a change. We will continue to examine possible refinements to outlier policy, in order to provide the best protection possible to hospitals that are faced with unusually resource-intensive cases.

Comment: ProPAC reiterated its recommendation that we increase the marginal cost factor for cost outliers from 70 to 80 percent and that the outlier payment pool be set at 6 percent. The Commission maintains that a 6 percent outlier pool is necessary to effectively address the risk hospitals face for treating exceptionally costly cases. ProPAC also believes that hospitals treating exceptionally costly cases should receive a higher percentage of those costs.

Response: We believe that our response to these issues in the proposed rule continues to be appropriate.

D. Indirect Medical Education Adjustment to Prospective Payment System Operating Payments (Recommendation 15)

Recommendation: ProPAC recommends that the indirect medical education adjustment to the prospective payment system operating payments be reduced from its current level of 7.7 percent to 7.0 percent for fiscal year 1994. This reduction should be implemented with the anticipated decrease in indirect medical education payments returned to all hospitals through a proportionate increase in the standardized payment amounts.

Response in the Proposed Rule: This recommendation is very similar to ProPAC's recommendation on the level of the indirect medical education (IME) adjustment for FY 1993, to which we responded in the proposed (57 FR 23661) and final (57 FR 39804) rules concerning the changes to the prospective payment systems for FY 1993. We continue to disagree with ProPAC's methodology for estimating the indirect cost effect of teaching without accounting for the disproportionate share (DSH) adjustment. Also, we believe that the resident-to-average daily census (ADC) ratio rather than the resident-to-bed ratio is the most appropriate measure of teaching intensity.

One difference in ProPAC's recommendation for FY 1994 is that the reduction in IME payments would be returned to all hospitals through an increase in the standardized amounts. For FY 1993, ProPAC recommended the reduction in IME payments be returned to teaching hospitals that qualify for the DSH payment adjustment, by increasin the DSH adjustment. This aspect of ProPAC's FY 1993 recommendation stemmed from concern that hospitals receiving both adjustments have lower total margins than other hospitals, even though their margins on Medicare

patients are among the highest of any hospital group. However, as a result of increases in the level of the DSH adjustment enacted by the Omnibus Budget Reconciliation Act of 1990 (Public Law 101-508), ProPAC no longer believes the IME savings should be targeted toward teaching, DSH hospitals. Instead, the savings would be redistributed among all hospitals.

We agree that the IME adjustment should be reduced. When the capital prospective payment system was implemented beginning in FY 1992, we estimated the indirect effect of graduate medical education on total costs (excluding direct graduate medical education costs) to be an increase of approximately 2.82 percent for every 10 percent increase in the resident-to-ADC ratio. The President's FY 1994 budget recommends reducing the IME adjustment for the operating prospective payment system from its current level to the equivalent of a 5.65 percent increase for every 10 percent increase in the resident-to-bed ratio. (An IME adjustment of 5.65 percent based on the resident-to-bed ratio produces the same payment result as an adjustment of 3.43 percent that is based on resident-to-ADC ratio. See the discussion below comparing the different formulas.) Effective for discharges occurring on or after January 1, 1996, and before January 1, 1998, the budget would reduce IME payments to approximately a 3.51 percent increase for every 10 percent increase in teaching intensity (as measured by hospitals' resident-to-ADC ratios). Effective for discharges on or after January 1, 1998, the adjustment would be further reduced to approximately 3.43 percent. This proposal would also change the specification of the operating IME adjustment formula to make it similar to that used for the capital IME adjustment factor.

Under the President's budget proposal, the reduced IME payments would be used for deficit reduction rather than being redistributed to all hospitals through the standardized amounts. By delaying the reduction for 2 years, the proposal allows teaching hospitals time to prepare. Furthermore, to the extent that health care reform addresses some of the non-Medicare social issues currently facing many major teaching hospitals, the current high level of the adjustment may no longer be needed to subsidize non-Medicare operations. We believe that payments to nonteaching hospitals are adequate and that it would be inappropriate to increase their payments by making the teaching reduction budget neutral.

We note that the difference between the President's budget proposal and ProPAC's proposal (or the current adjustment) is not as large as the percentage increases might suggest. That is because, by convention, this adjustment has been described as the percentage increase in payments that occurs when the ratio increases slightly from zero (0.001), multiplied by the amount necessary to characterize the ratio increase as 10 percent. We believe the adjustments can better be compared by describing them in terms of the average adjustment factor (weighted by DRG payments plus outliers) they produce. Because these average adjustment factors are weighted by payments, they reflect the different levels of overall IME payments under the various formulas. For example, under the current operating IME formula, the weighted average IME adjustment factor is 0.133 (or an average per case adjustment for teaching hospitals of 13.3 percent). Under ProPAC's recommendation, we estimate the average adjustment factor would be 0.128 (an average adjustment of 12.8 percent per case). Under the President's budget proposal, for discharges on or after January 1, 1996, through December 31, 1997, the average factor would be 0.096, and, on or after January 1, 1998, it would be 0.094 (that is, average adjustments of 9.6 and 9.4 percent per case, respectively).

Comment: ProPAC commented on several issues addressed in our response to their comment in the proposed rule. First, ProPAC continues to believe that the IME adjustment should begin to be reduced effective in FY 1994, and points out that subsidization of non-Medicare operations is not an objective of the IME adjustment. They further believe that the savings from reducing IME should be returned to all hospitals through a budget neutral increase in the standardized payment amounts, in light of concern that the Medicare operating margin for nonteaching hospitals was −9.4 percent during FY 1991. This position was also taken by another commenter. That commenter opposes any reduction in IME, but, should a reduction occur, the commenter believes that the decrease in anticipated IME payments should be redistributed to all hospitals in light of the overall negative Medicare operating margins. The commenter stated that using any IME reduction as a budget-cutting tool is inappropriate and contrary to the budget neutrality concept of the prospective payment system.

Another commenter recommended that no further adjustments be made to the IME adjustment until refinements are made to the DRG classification system to properly recognize cost differences related to severity of illness. The commenter believes that a reduction of IME payments would place a disproportionate burden on a segment of the industry that has already borne significant payment reductions. Finally, one commenter stated that teaching hospitals' Medicare operating margins may indicate they are overpaid and suggested removing these payments from the base rates and pooling the dollars. This commenter states that this would allow these facilities to be monitored with efficiency incentives as a reward for lower cost programs, and would encourage primary care residencies.

The second issue raised by ProPAC relates to our disagreement with its methodology for estimating the indirect cost effect of teaching without accounting for the DSH adjustment. ProPAC indicates that our position does not reflect the unique objective of the DSH adjustment. Specifically, ProPAC commented that it is inappropriate to control for DSH in the estimate of IME cost because DSH does not reflect cost differences.

Third, ProPAC repeated its previous opposition to our recommendation for a statutory revision that would change the measure of teaching intensity from the resident-to-bed ratio to the ratio of residents-to-average daily census. ProPAC contends that this revision would shift the distribution of IME payments away from high-occupancy hospitals toward low-occupancy hospitals. The Commission goes on to state that a central objective of the prospective payment system is to encourage hospitals to use resources efficiently and changing to average daily census in the denominator of the IME equation would reward inefficiency.

Finally, ProPAC expressed its shared interest in finding a better convention to describe the level of the IME adjustment, stating that the current convention is an imprecise and often misinterpreted hospital-level description of the relationship between teaching intensity and the adjustment factor. The HCFA recommended convention, however, is an aggregate-level description affected by factors unrelated to teaching activity, such as the distribution of cases across teaching hospitals and outlier payment rules.

Response: We wholeheartedly agree with ProPAC's statement that subsidization of non-Medicare operations is not an objective of the IME adjustment. We have consistently recommended lowering the IME adjustment to a level more in line with

the actual effect of graduate medical education on inpatient operating costs. Although ProPAC has indicated that further reductions beyond its FY 1994 recommendation should occur only after an examination of the financial status of teaching hospitals, we share their belief that the objective of the IME adjustment is to compensate teaching hospitals for their IME costs. While our best estimate of those costs is significantly less than ProPAC's (as described above in our response in the proposed rule), the underlying premises of our positions are very similar. That is, the IME adjustment should be reduced, but it should be done in a way that recognizes the critical roles teaching hospitals play in meeting many of society's health care needs.

We disagree with the comment suggesting that no further reductions in IME should occur until the DRG classification system is refined further. The IME adjustment has not been changed since October 1, 1988, while the DRG classification system is refined annually. Furthermore, our estimate of the IME cost relationship controlled for case-mix variation using the GROUPER in place at the time (1991). To the extent that teaching hospitals have higher costs due to more severely ill patients that are not explained by controlling for case-mix, those costs would be reflected in the IME estimate. Also, the commenter's point that a reduction in IME payments would place a disproportionate burden on teaching hospitals is unsubstantiated in light of the singularly high Medicare operating margins of these hospitals.

With regard to the commenter's position that the savings from reducing IME should be returned to all hospitals through a budget-neutral increase in the standardized payment amounts, and their contention that it is inappropriate and contrary to the concept of the prospective payment system to use the savings from reducing IME as a budget-cutting tool, any such increase must be examined in the larger contexts of health care reform and deficit reduction. In response to the suggestion that IME payments should be pooled and used to reward efficiency and promote primary care residencies, these are beyond the current objective of the IME adjustment as stated above.

With respect to ProPAC's point that it is inappropriate to include a DSH variable when estimating the IME cost effect, our position has not changed from that stated in the September 1, 1992 final rule (57 FR 39805). Congress recognized the overlapping costs accounted for by these two adjustments by simultaneously revising the level of the IME adjustment when the DSH adjustment was enacted in 1986 and twice hence. Our analysis indicates that there is evidence of significantly higher costs related to DSH among urban hospitals with 100 or more beds. This group of hospitals, which will receive 96 percent of all DSH payments during FY 1994, includes the large majority of teaching hospitals. Failing to account for the higher costs shown to be associated with DSH for these hospitals results in some of the cost effects of DSH being reflected in the IME estimate, thus creating the potential for double payment of DSH costs. The fact that teaching hospitals will receive approximately 66 percent of all FY 1994 DSH payments (over $2 billion) illustrates the significance of such potential overpayments.

Similarly, with regard to ProPAC's opposition to the resident-to-average daily census ratio, we discussed in detail our reasons for preferring this ratio in the September 1, 1992 final rule (57 FR 39807). While ProPAC is correct that this change would result in a one-time redistribution of IME payments, its argument that changing the denominator would reward inefficiency is not persuasive. We believe the resident-to-average daily census ratio is a more straightforward and appropriate measure of teaching intensity. Therefore, we are recommending the change as a refinement to the IME adjustment, not as a reward for low-occupancy hospitals or a penalty for high-occupancy hospitals. Contrary to ProPAC's comment, we believe that hospitals will have an incentive to minimize average daily census and this is a result entirely consistent with the general incentives of the prospective payment system. Furthermore, the IME adjustment is intended to recognize the costs associated with the teaching process. Provided that a hospital is maintaining a training environment in accordance with the criteria of its national approving organization, our responsibility is to compensate the hospital for those costs as accurately and equitably as possible. We believe the resident-to-average daily census ratio represents an improvement in this regard.

Finally, regarding the convention used to describe the IME adjustment, we acknowledge ProPAC's shared concern that the current description of the adjustment may be inadequate, and we agree that there is a need for an improved description of the rate of increase in the adjustment as teaching intensity rises. However, the weighted-average IME adjustment factor facilitates comparisons between adjustment formulas using different measures of teaching intensity and different formula specifications. Because it reflects total IME payments, this description is necessarily dependent on the factors that affect these payments, such as hospitals' case mix and percentages of outlier cases.

E. Evaluating and Improving Medicare Quality of Care Mechanisms (Recommendation 17)

Recommendation: ProPAC recommends that HCFA assess the methods Medicare uses to monitor quality of care. The Medicare program should adequately fund these evaluations as well as ongoing efforts to monitor and assure the quality of care delivered to its beneficiaries. Further, HCFA should coordinate its quality assurance programs with those of the rest of the health care industry.

Response in the Proposed Rule: In its report, ProPAC implies that the PROs have had no methods for improving quality of care based on individual case review, other than merely notifying the physician or provider, on the one hand, and imposing sanctions, on the other, a system that many physicians regard as punitive. It also states that the present PRO methods fail to discern systematic patterns of poor quality care, and are oriented toward punishing providers for past care, rather than modifying future performance.

Although PROs already have a number of interventions available to them, including educational interventions and corrective action plans, HCFA, through the PRO program, is addressing ProPAC's concerns by implementing a quality improvement mechanism called pattern analysis, with educational feedback to physicians. Under this method, hospital records are still sampled and reviewed, but the emphasis is on examining patterns of care at both the physician and the facility level.

In concert with this new system, HCFA is also developing an approach to evaluate PRO performance in the use of pattern analysis, and to ensure that measurable improvements have been made in the quality of care. HCFA is working to develop a methodology that will:

- Quantify change;
- Measure performance against the baseline; and
- Provide continuous feedback to the hospitals.

The individual case review performed under the present contracts and under SOW IV will allow the PROs to identify individual instances of poor quality care. Additionally, the beneficiary-specific sampling mechanism used

under SOW IV allows HCFA to track the individual beneficiary's care over a period of time. The result should be a definitive picture of the health delivery system available to the individual Medicare beneficiary, and an emerging picture of the relationship of the care provided by multiple facilities to the same individual.

However, case review, by itself, is not a cost-effective means of identifying and dealing with quality concerns. Under SOW IV, HCFA will supplement individual case review with a data-driven approach to monitoring care and outcomes and a cooperative approach to working with the health care community to improve care. The major changes are that PROs will use clinical and other data bases to examine patterns of care and outcomes, focus primarily on the differences that occur regularly between the observed and the achievable in both care and outcomes (rather than isolated cases), and identify variations that are concerns or of interest (practices that generally result in positive outcomes) by monitoring patterns of care and outcomes. PROs will be encouraged to conduct more detailed studies of the sources of outstanding problems or performance, and how and why they occurred. Under SOW IV, PROs will work cooperatively with the health care community by providing information pertaining to patterns of quality concerns to medical associations and to individual physicians and providers.

ProPAC further states that HCFA should coordinate its quality assurance efforts with those being conducted in the rest of the health care industry including quality assurance activities in hospitals, the National Committee for Quality Assurance, and the Joint Commission on Accreditation of Healthcare Organizations.

HCFA concurs that coordination with others in the health care industry concerned with quality of care is advisable. We welcome cooperative efforts. It should be noted that under SOW IV, the PROs will be working directly with those in hospitals responsible for internal quality assurance (for example, quality assurance committees) to utilize PRO-obtained information in improving the quality of care delivered to Medicare beneficiaries.

As reported in the Journal of the American Medical Association, new quality management models focusing on improving the processes of producing typical care rather than using inspection to correct unusual errors are emerging outside the health care industry. The models suggest that we should inspect care in order to identify patterns of care and outcomes, not to focus on individual concerns. Under SOW IV, PROs will conduct medical review of a limited number of cases and use the resulting data to identify common care and outcomes.

The PRO will analyze the review data looking for positive and negative outcomes, and provide feedback to the providers and practitioners that they may use as a basis for positive changes in future patient care behavior. In effect, the PRO's feedback serves to reinforce good behavior, and provide evidence of behaviors which may result in poor outcomes. The success will be measured by the decline in the use of a specific pattern of medical care which has been shown statistically to produce less favorable outcomes than another given the same set of medical circumstances.

Comment: ProPAC reiterated the comments they submitted in their original recommendations.

Response: We believe our original response to these comments remains appropriate.

F. Update to Composite Rate for Dialysis Services (Recommendation 18)

Recommendation: ProPAC recommends that the composite rate payment for dialysis services be updated by 2.5 percent for fiscal year 1994. ProPAC believes that this increase in payments will allow facilities to deliver high quality dialysis services to Medicare beneficiaries with end-stage renal disease.

Response in the Proposed Rule: ProPAC's recommended increase would raise facilities' composite payment rates an average of $3.15 per treatment, and Medicare expenditures about $50 million annually. In constructing its recommendation, ProPAC used a framework similar to that employed in updating payments for PPS hospitals. This framework included an estimated market basket rate of increase in input prices, quality-enhancing scientific and technological advances, and a productivity improvement target. A discretionary adjustment of minus 2 percentage points was made to reflect the relationship between payments and estimated fiscal year 1993 costs.

Over the years renal facilities have controlled their costs. At this time, however, there is concern that inflation and new regulatory costs will erode renal facilities' operating margins and that this erosion could adversely affect the quality of patient care. In its report, ProPAC cited these factors as reasons for recommending a payment increase. Its recommendations would increase all renal facilities payment rates, even though 69 percent of all independent outpatient hemodialysis treatments are furnished at facilities with costs below their payment rates. For these independent providers, ProPAC's comparison of per treatment composite payments to estimated per treatment costs for 1993 indicates that payments exceed average costs by nearly 9 percent. Furthermore, the number of facilities reporting Medicare revenues in excess of Medicare reported costs increased by 62 from FYs 1990 to 1991.

We do not believe a 2.5 percent increase for all renal facilities is justified at this time. Increasing the payment rate for a facility whose costs are below its payment rate does not ensure quality of care, nor does it match payment with the proper level of medical resources needed to furnish a dialysis treatment. We note that since 1983, the number of renal facilities has increased at a rate of one new facility every 3.4 days. Moreover, during the last 3 years, the number of renal facilities has grown even faster, at a rate of one facility every 2.8 days. This increase in the number of new ESRD facilities does not support the argument that payment rates are too low to foster growth. Although the growth in the number of facilities can be attributed in part to growth in patient population, we believe that the increasing number of renal facilities also reflects the continuing economic viability of the industry, as evidenced by the fact that a majority of these new facilities are for-profit, independent facilities.

Hospital-based renal facilities, on the other hand, have historically reported Medicare costs in excess of Medicare payments. The 1990 and 1991 hospital cost data continue to display a wide range of costs per treatments. Attempts have been made to explain why hospital-based renal facilities report a wider variance of cost per treatment. However, for whatever reasons, hospitals have been less successful than independent facilities in keeping their costs below their payment rates. Even though hospitals report costs in excess of their payment rates, the number of hospital-based facilities continues to grow, but at a much slower pace than independent facilities. We believe the composite rate exception process provides an adequate mechanism to adjust payment levels for those renal facilities, particularly hospital-based ones, that report higher costs and are able to relate these amounts to the exception criteria specified in regulations at § 413.170.

Section 4201 of Public Law 101–508 mandated that ProPAC recommend an annual update for dialysis payments.

Following is a discussion of the appropriate factors to be considered for such an update if there were substantiated evidence of a need to update payment rates to ESRD providers.

The purpose of a payment update is to account for changes in conditions that affect providers' costs of production. The intent is to insure that payments per treatment cover costs per treatment for efficient providers of services. Factors to consider in determining the need for and size of an update should include inflation, productivity and economies of scale, and scientific and technological advancement that increases costs and enhances health.

Inflation

A key consideration in updating payment rates is the appropriate price measure to be used. HCFA has two areas of concern about ProPAC's input price index recommendation.

The first is the appropriateness of the proposed cost share categories and weights for the current distribution of costs among ESRD facilities. The cost shares for the ProPAC ESRD input price index were developed from 1991 Medicare cost report data on dialysis facilities. However, the 1991 data on cost shares are from unaudited cost reports. Therefore, these data may be biased for particular categories of costs, and their use could raise valid questions about the integrity of the payment process. HCFA is currently conducting an audit of ESRD facility costs to be completed in the fall of 1993. This audit should provide valuable information regarding ESRD cost levels and cost shares by provider type.

ProPAC's recommendation identifies only four categories of cost: capital, labor, other direct costs, and overhead. Medicare cost reports indicate that it may be possible to further disaggregate costs to show individual cost categories for wages and salaries, employee benefits, depreciation of plant and equipment, depreciation of movable equipment, drugs, supplies, laboratory and overhead. HCFA input price index analyses for hospitals, home health agencies and skilled nursing facilities suggest that more disaggregation of cost categories is needed than the ProPAC index employs for its ESRD input price index. When the audited data sources become available, the additional cost categories should be considered.

Our second area of concern is the appropriateness of the price proxies identified for the cost share categories in the ESRD input price index. We believe it is inappropriate to use the price proxies from the hospital prospective payment system, SNF, and HHA input price indexes to measure price growth for ESRD providers, as ProPAC has proposed. ESRD facilities purchase inputs in many markets that are unique to the ESRD industry. ProPAC's March 1993 report provides evidence of substantial declines in the prices of key inputs to ESRD treatments. None of the other price indexes reflect these price declines. HCFA is evaluating data from the Bureau of Labor Statistics and other sources that suggest the possibility of providing some wage and price measures specific to the ESRD industry.

Productivity and Economies of Scale

Understanding changes in productivity and economies of scale is essential to the development of an update formula. As firms become more productive, they can produce the same level of outputs using smaller levels of inputs. This is also true for firms experiencing increasing economies of scale. Over a certain range of growth in treatments per facility, firms that increase capacity utilization achieve greater specialization and higher levels of efficiency. This phenomenon produces unit cost reductions, which, if unaccounted for in an update methodology, could result in excessive payments relative to costs.

ProPAC estimates indicate that the ESRD industry has experienced considerable productivity growth in the last decade. ProPAC doubts that future growth in productivity will continue at current rates, but does not make a persuasive case why a decline in ESRD industry productivity growth should be the most likely scenario. If historical trends hold, further cost reductions can be expected in the near term. When new ESRD firms enter the industry, typically the number of treatments per facility is relatively low. As these facilities expand utilization rates, large productivity gains are likely. Failure to adjust payments for productivity gains would diminish ESRD providers' incentive to take productivity enhancing actions.

Science and Technological Advancement

In the last decade, the ESRD industry has witnessed ongoing scientific and technological innovation. Some of these innovations were cost-increasing but quality-enhancing. In spite of this, ProPAC indicates that industry productivity gains have lowered costs per treatment more than scientific and technological innovations have increased costs. The lack of evidence indicating that a major change in this relationship is imminent implies that there is no basis to increase payment per treatment at this time.

As discussed above, HCFA and ProPAC analyses indicate that current payment levels substantially exceed costs for the independent facilities. HCFA maintains an exceptions procedure for those facilities whose costs legitimately exceed payments. These facts suggest it is not appropriate to update payment rates at this time. In addition, ProPAC acknowledges that their input price index does not effectively measure changes in costs for ESRD providers.

We support the development of an update methodology as a paradigm for analyzing and monitoring payment levels for ESRD providers. However, existing data do not indicate the need for an update at this time. HCFA will continue to work with ProPAC to develop a valid input price index as well as an update methodology that accounts for changes in science and technology, productivity growth and changing economies of scale.

Comments and Responses

We received comments on a number of related issues, as discussed below.

1. Exceptions Process

In the proposed rule, we stated that a payment rate increase was not justified for all renal facilities at this time since many independent renal facilities reported Medicare revenues in excess of Medicare allowable costs. We indicated that the exception process provides relief for those renal facilities that meet the exception criteria in the composite rate regulation. Under this process, renal facilities may receive additional payments.

Comment: One commenter believes that small renal facilities will not apply for exceptions because they lack the expertise in submitting exception requests. In addition, the commenter suggests that it is not reasonable for small renal facilities to incur costs in preparing an exception, especially if the additional revenue does not cover the cost of preparing an exception request.

Response: We understand the commenter's concern and realize that this may be a problem for small renal facilities. However, we believe that the current process is adequate for approving additional revenues for those facilities that meet the isolated essential facility criteria. We have recently revised these instructions to more clearly indicate the procedures a facility must follow in filing an exception request. We anticipate that these instructions will be less burdensome to facilities.

Comment: A commenter complained that the exception process takes too much time.

Response: Under section 1881(b)(7) of the Act, HCFA is required to process exceptions within 60 working days of the receipt of the exception request, or the exception is deemed approved. HCFA has processed all exception requests received from intermediaries within this stringent time frame.

Comment: One commenter indicated that the exception process was originally intended to be available on a regular basis, and stated that the exception process has been opened in an irregular manner and only six times in the past 10 years.

Response: Under regulations at § 413.170(f), we have opened the exception process when payment rates are revised. We have also voluntarily opened the exception process on several occasions. Opening the exception process on an annual basis would place a burden on renal facilities to qualify for an exception each year.

Comment: A commenter stated that the exception criteria are vague, and that we are inconsistent in our interpretation of the criteria. The commenter also stated that the cost standards (which make up the rates and are used to determine exception amounts) are outdated and need to be revised.

Response: The regulations provide guidelines for evaluating exception requests. However, each facility has different circumstances and must be reviewed on a case-by-case basis. Thus, we believe it would not be appropriate to set forth narrow criteria that might appropriately address some situations and not others.

We note that the composite rate is currently set by statute. Nevertheless, the cost standards now in use will be reevaluated when the current ESRD audits are completed and the data are analyzed. We plan to revise these standards when payment rates are revised.

Comment: A commenter explained that there are forces affecting costs that are beyond its control. In some areas the rate is capped at $139 per treatment even though the wage index would have afforded a higher payment rate. The commenter stated that the wage index should have an appeal process.

Response: We believe that the costs necessary to administer and to monitor the appeal system would not be justified. Moreover, for services furnished on or after January 1, 1991, section 9335 of Public Law 99–509, as amended by section 4201 of Public Law 101–508, prescribes by statute the composite payment rate. Once Congress enacts legislation to revise composite payment rates, we will consider using the most current HCFA wage index to compute payment rates. At that time, we will examine the need to continue the payment limitation of $139.00 and the wage index floor of 90 percent.

2. Renal Facilities Reporting Medicare Revenues in Excess of Medicare Costs

Several commenters were concerned about our statements that 69 percent of outpatient treatments are performed at independent renal facilities reporting Medicare revenues in excess of Medicare costs. Our analysis did not take into consideration home patients or other revenues generated by renal facilities. ProPAC data showed that independent renal facilities had an average 9 percent profit factor.

Comment: Several commenters pointed out that since 69 percent of the facilities are profitable, 31 percent of the facilities do not cover their costs. Further, an industry with 31 percent of the business not covering their costs is an industry whose viability is in question.

Response: We stated that 69 percent of outpatient treatments furnished by independent facilities reported dialysis revenues in excess of composite rate costs. A number of facilities that were not reporting excess Medicare revenues were new facilities in operation for less than 2 years. Under-utilized new facilities tend to report costs in excess of revenues. In computing composite payment rates, we used the median costs of hospital and independent renal facilities. This methodology presumes 50 percent of treatments are furnished below the median. The purpose of the payment methodology is to pay a reasonable amount for furnishing a maintenance dialysis treatment, and facilities are afforded the opportunity to apply for an exception if the circumstances warrant such an increase.

Comment: One commenter stated that the profit factor of 9 percent does not include items like bad debts and the overhead allocated to Epoietin (EPO). The commenter argues that if such items were accounted for, the result would be a lower profit factor.

Response: It is correct that the 9 percent figure did not reflect the effects of bad debts or the effects of overhead allocated to EPO. However, this percentage also did not reflect the effects of home patients or revenues generated from other services furnished by renal facilities. As home costs are generally less than in-facility costs, a typical facility would benefit from furnishing services to home patients. Regarding EPO, we are in the process of addressing this issue. We are revising cost report instructions to eliminate the requirement to allocate overhead cost to EPO. Furthermore, the current audits will eliminate overhead allocated to EPO. This will enable us to eliminate the effects this allocation has on composite rate costs.

3. ProPAC's Proposed 2.5 Percent Rate Increase

All of the respondents recommended the adoption of ProPAC's proposed 2.5 percent rate increase. Many believed the logic behind HCFA's rejection of the proposal to be flawed.

Comment: All commenters wanted HCFA to reconsider its position that ProPAC's proposed 2.5 percent rate increase was unnecessary.

Response: Since the inception of the composite payment rate, the renal industry has maintained that the payment levels are not adequate and should be increased. As noted above, however, for services furnished on or after January 1, 1991, the composite payment rate is set by statute. Furthermore, although the ESRD industry continues to grow. The growth rate of renal facilities would not continue if there were not a reasonable expectation of financial rewards. While a payment rate increase may be justified for some facilities, a 2.5 percentage increase for all facilities at this time does not appear justified.

Comment: Several commenters argued that the increase in the number of dialysis facilities was not related to the profitability in the industry but rather reflects only the overall increase in the number of ESRD patients.

Response: We are aware that there have been significant increases in the number of ESRD patients. However, regardless of the population increase, entrepreneurs would not invest capital if a reasonable expectation of return on investment did not exist. The vast majority of new facilities are "for-profit". We believe that the rate of entry of for-profit firms does provide economic evidence of the financial attractiveness and profitability of the industry. As long as patient population continues to grow, new facilities will enter the market. In addition, existing facilities will continue to expand. As these facilities expand and their utilization increases, data have shown that these facilities will report lower costs per treatment. These larger facilities furnish the majority of treatments and tend to report revenues in excess of costs.

4. Establish a Separate Rate for Hospitals

Comment: One commenter recommended that we establish a separate rate for hospital-based ESRD facilities. The commenter believes that since these facilities treat a sicker population with more complications, they should be paid a higher rate.

Response: Currently, section 1881(b)(7) of the Act requires a separate rate computation for hospital-based facilities. This rate reflects the characteristics of hospital-based facilities. We note that ProPAC, in its analysis of patient data, found no difference between patients treated at hospital facilities and independent facilities. We also note that ESRD facilities may seek an exception on the basis of atypical patient mix.

Comment: ProPAC expressed concern about our position regarding whether price proxies from other input price indexes should be used in an input price index for end stage renal facilities.

Response: We believe that ProPAC's concerns result from misunderstanding HCFA's position as expressed in the proposed rule. ProPAC expressed concern about "* * * the Secretary's assertion that it is inappropriate for a dialysis market basket to use price proxies that also are used in other health care facility market baskets." However, in the proposed rule we stated that "it is inappropriate to use the price proxies from the prospective payment system, SNF, and HHA input price indexes to measure price growth for ESRD providers, *as ProPAC has proposed*" (emphasis added). This language in the proposed rule was intended to take issue with the specific application of these price proxies in ProPAC's report rather than the general question of whether or not they should be used.

HCFA's input price proxies for the hospital, SNF and HHA indexes are not tailored to the unique cost categories of ESRD facilities. In choosing a price proxy, relevancy and market structure need to be taken into account. Relevancy relates the specific category of cost to a price proxy that captures the patterns of cost unique to that cost category. Market structure considerations include the extent to which competition or administered prices determine price levels and changes. ProPAC's comments explained why it is necessary to balance market structure considerations with relevancy in certain situations, such as when there is vertical integration among ESRD providers and suppliers of ESRD inputs. If there is vertical integration among ESRD providers and input suppliers, then the prices of dialysis inputs may to some degree reflect corporate cost accounting decisions rather than market forces. In such a situation, it might be misleading to use industry-specific price measures exclusively to measure costs.

Also, we believe that the issue of whether to use an ESRD input price index for payment purposes has not been adequately considered at this time due to lack of data. While developing and monitoring an input price index for the ESRD industry is desirable, we believe that such an index should not be adopted for payment purposes until it has been studied to understand its characteristics relative to the industry's actual performance.

Comment: One commenter said that increasing the number of cost categories in ProPAC's ESRD input price index would add unnecessary complexity to the payment mechanism.

Response: We agree that adding unnecessary complexity to an input price index would not be constructive. However, ProPAC's proposal, which uses only four broad cost categories, does not allow sufficient delineation of cost structures for fair payment. We believe that the number of cost categories in an input price index should be determined by the structure of costs in the industry. The number of categories should allow heterogeneity of costs across categories and homogeneity of costs within categories. This principle has guided the development of all of the input price indexes that HCFA uses for reimbursement under Medicare. This criterion is necessary to aid in the selection of price proxies that are representative of the cost growth in the categories for which they are being selected. For example, ProPAC proposed to use a category called "other direct costs" to represent all factors other than capital, labor, and overhead expenses. This residual cost category includes a heterogeneous mixture of inputs unique to the ESRD industry as well as general to the overall economy. Based on data supplied by ProPAC, it is likely that this cost category encompasses an unknown mixture of costs that are rising and costs that are falling. Appropriate disaggregation of this broad category will be useful for both the ESRD providers and the regulators. HCFA believes the benefits of increasing the number of cost categories outweigh the risk of introducing complexity into the payment mechanism.

Comment: Several commenters asserted that the rate of productivity gain in the ESRD industry has declined over time and that future gains cannot be expected to match the large productivity gains that the industry experienced during the 1980s. These commenters conclude that unless cost growth is offset by productivity gains, ESRD providers will be harmed by the increasing financial pressure.

Response: Even if there has been a decline in the rate of increase in productivity among ESRD providers, we have not seen evidence that demonstrates that efficient providers are not receiving adequate payments relative to costs. Given that ProPAC has estimated a 9 percent profit margin for independent facilities for 1993, we do not see the basis for concluding that a 2.5 percent update is necessary to prevent a decline in the access to services and quality of care in ESRD facilities. As noted above, the continuing rapid growth in for-profit firm entry is significant and suggests that current financial conditions for renal facilities are attractive and profitable. Also, it is likely, at least in the short term, that there will be continued productivity gains as new providers become more experienced and more efficient.

Comment: Several commenters suggested that the pending ESRD facility audit results will provide useful information on the current cost structure and level of ESRD costs relative to payment levels.

Response: Like the commenters, we are optimistic that the audit will provide useful information for assessing the appropriateness of payment rates relative to cost levels for efficient providers. We appreciate the industry's support of this initiative.

G. Improving Data Quality and Program Administration for Dialysis Services (Recommendation 19)

Recommendation: ProPAC is concerned that the dialysis facility data are inadequate for assessing costs across providers and modalities and changes in costs over time. ProPAC believes that HCFA should regularly audit the cost reports of a representative sample of dialysis facilities and maintain a database with this information. ProPAC states that HCFA should also improve policies to ensure the consistency of the data across providers through changes in program administration.

Response in the Proposed Rule: Renal cost data come from cost reports filed by renal facilities. After renal facilities file their cost reports, intermediaries transmit the cost report data to the Hospital Cost Reporting Information System (HCRIS) in HCFA. For the most part, the renal cost reports are not

audited and represent "as-submitted" data. Currently, the composite payment rates are not based on audits of renal facilities cost. Therefore, no benefit would be derived from auditing these facilities on a regular basis. However, intermediaries still perform a limited desk review on these cost reports, especially if a renal facility is claiming bad debts.

Auditing renal cost reports to improve the quality of the data would not be cost effective. Furthermore, audits would only correct a small percentage of the data. To improve overall quality of the renal cost data, administrators of renal facilities must take a more active role in ensuring that renal data submitted by their facilities are correct.

In 1992, we reviewed the 1990 cost data to identify renal facilities with cost report data that did not appear to be correct. We instructed intermediaries to contact those renal facilities that submitted questionable cost data. Intermediaries are responsible for correcting cost report data and for submitting a revised cost report to HCRIS. In addition, intermediaries are responsible for informing HCFA about problems with the renal cost report data. The most notable of these problems deals with the reporting of costs and treatments for home patients under Method I and Method II. Under Method I, Medicare pays for home patients under the composite payment rate system; under Method II, the beneficiary deals directly with the supplier. In many instances, renal facilities either have combined Method I and Method II costs or they have combined Method I and Method II treatments. Combining costs or combining treatments is incorrect. To eliminate this problem, renal facilities should separately report costs for Method I and Method II home patients on their cost reports. Only Method I treatments are to be reported on the facilities cost report. In addition, renal facilities also have reported data that did not represent patient weeks for continuous ambulatory peritoneal dialysis (CAPD) and continuous cycling peritoneal dialysis (CCPD) services. This resulted in incorrect cost per treatment computations. The remaining errors by facilities included omitting information, using incorrect statistics for allocation, and using incorrect treatments to calculate their cost per treatment. These problems heighten the concern about using unaudited data for any analysis.

To reduce future problems, we are adding edits to HCRIS so that cost reports are rejected if they include treatments without costs, or costs without treatments. Also, these edits will reject renal cost reports if facilities do not report patient weeks for CAPD and CCPD.

In addition, we are preparing more detailed instructions to intermediaries and renal facilities for the purpose of:

- Helping facilities complete their renal cost reports properly;
- Making intermediaries aware of the errors in cost reports submitted by renal facilities and having the errors corrected in future cost reporting periods; and
- Explaining the proper procedures for facilities to follow in completing their cost reports, in order to eliminate these common errors.

These initiatives should help improve the reliability of the renal cost data without the need for regular audits. In the future, renal administrators should ensure that costs are not missing, treatments are reported correctly, Method I and Method II home costs are reported properly, and patient weeks are reported for CAPD and CCPD services.

We are in the process of auditing audit renal facilities in FY 1993 as recommended by ProPAC. Limited audit funds were made available to accomplish this special audit task. We have selected a scientific sample of 150 renal facilities to audit. Before selecting the audit sample, we discussed with ProPAC staff the design and limitation of the audit sample. The results of the audits will enable ProPAC to estimate the reasonable costs of furnishing a maintenance dialysis treatment in a hospital renal facility and in an independent renal facility. However, some issues raised by section 4201(b) of Public Law 101–508, such as the cost of furnishing a treatment in a rural facility and adjustment for patient mix, are beyond the scope of this audit sample.

ProPAC also believes that current procedures for reporting overhead costs for administration of EPO, while not affecting payment, may distort cost data. The renal cost report instructions for independent facilities require renal facilities to allocate overhead costs to EPO. Because this drug is expensive and frequently administered, a substantial amount of a facility's overhead costs are allocated to it. This allocation understates the costs of furnishing dialysis treatments. We are planning to revise the independent cost report to eliminate this concern about EPO and to make other necessary changes. We do not expect to receive data from the revised independent cost report before 1995. However, the audits planned for 1993 will include an adjustment to eliminate the allocation of overhead to the EPO cost center on the independent cost report.

Another concern raised by ProPAC is the possibility that services that should be incorporated under the composite rate will be paid for separately because of inadequate coordination within fiscal intermediaries and across fiscal intermediaries and carriers. ProPAC states that when the fiscal intermediary or carrier is processing bills, there is no means of distinguishing which dialysis-related services should be included in the composite rate. ProPAC recommends that HCFA develop a list of services for inclusion within the composite rate to resolve this inconsistency.

The composite rate payment is a comprehensive prospective payment per treatment that provides an incentive for the efficient delivery of outpatient maintenance dialysis services to Medicare beneficiaries. The composite rate includes payment for all dialysis related items and services furnished to the patient by the ESRD facility. The determination as to whether an item or service is covered under the composite rate payment does not depend on the frequency that dialysis patients require the item or service, or the number of patients who require it.

The development of a list of items and services included under the composite rate is not a simple matter. Although there is a group of services routinely furnished to ESRD patients that are dialysis related, such as nursing, social work services, equipment and supplies, there may be other services that are dialysis related only under certain circumstances and for certain patients. Further, there are multiple modes of dialysis, such as several means of peritoneal dialysis, hemodialysis, and hemofiltration. Each method involves different supplies that are directly related to dialysis.

Thus, while isolated cases of errors may occur under the claims processing system, we believe that the current safeguards provide sufficient assurance that services directly related to the dialysis session are included in the composite payment rate and, at the same time, allow for flexibility to address these isolated cases.

If we were to develop a list as ProPAC has suggested, we believe such a list might not be sufficiently comprehensive, or may be too comprehensive, resulting, under certain circumstances, in inappropriate inclusion or exclusion of items and services under the composite rate. Further, given the rapid changes that occur in technology, we would envision such a list as quickly becoming obsolete and subject to suggested additions and deletions.

ProPAC is also concerned that intermediaries and carriers have

excessive latitude in determining medical justification for services that may be paid separately outside the composite rate. ProPAC believes this situation has resulted in coverage variation for these services.

In most cases, HCFA delegates medical necessity decisions to its contractors. After extensive assessments by the Office of Health Technology Assessment, we have issued national coverage policies for a few services and procedures; however, contractors make coverage determinations for the vast majority of procedures and services.

Contractors develop their individual medical necessity policies by considering the medical literature and local consultants' medical opinions. Although such contractor discretion may result in inconsistency among the carriers and intermediaries in Medicare claims processing, we believe such variation is consistent with the intent of the law that allows local practices to be reflected in Medicare coverage policies.

Medical directors from our contractors convene regularly for meetings with HCFA to discuss issues that have arisen. In this forum, contractors share their local practices and have an opportunity to hear alternative strategies. We believe that this open forum promotes consistency without being restrictive.

Comments and Responses

Again, we received comments on a number of related issues, as discussed below.

1. Data Quality

Comment: Several commenters were concerned about the quality of data used by HCFA. Complaints included outdated cost reports, limited intermediary understanding of ESRD, a lack of system edit checks, and improper training of the intermediaries.

Response: As discussed in our above response from the proposed rule, we have initiated several measures to improve data quality, and ProPAC has expressed support for our efforts. We have added edit checks to the facility reporting system so that obvious errors are detected. These edits included identification of cost reports that show treatments with no costs, or vice versa, and no patient weeks for CAPD and CCPD. We are providing more detailed instructions to providers and intermediaries including a description of common errors. Further, both the independent facility cost report (HCFA 265) and the hospital-based cost reports (HCFA 2552) are being revised to maximize data quality.

Comment: ProPAC expressed its support for HCFA's performing audits in 1993, but argued that audits should be more regular to ensure that quality data is maintained.

Response: The 1993 audits currently underway will cost in excess of $1 million. This is a substantial amount of money at a time when audit funds continue to decline and other Medicare expenditures are significantly higher. As reimbursement is not determined from the cost report, an annual audit is unnecessary. While future availability of audit funds is at best tenuous, we are considering a schedule under which we would audit ESRD facilities every 3 years, provided audit funds are available. In between these years, the unaudited data (with improved edits, better intermediary and provider instructions, and revised cost reports) can be used as a proxy to evaluate ESRD costs.

2. EPO Rates

Comment: One commenter recommended that no further cuts be made to the payment rates for EPO, without a comprehensive evaluation of the potential effects on patient outcomes of any such changes in reimbursement.

Response: Public Law 103–66 (enacted August 10, 1993) requires a reduction in the payment rate from $11 to $10 per one thousand units. HCFA will issue instructions implementing this provision.

3. Services Not Covered Under the Composite Rate

Comment: One commenter was pleased to see that HCFA would no longer require facilities to allocate overhead to EPO. The commenter also believes that this policy should be applied to any separately billable item shown on the cost report.

Response: The payment for EPO and for other separately billable items are handled differently. The EPO payment rate per dosage is set by statute, while other separately billable items are paid generally according to the amount shown in the Drug Topics Red Book. We believe that the amounts included in the Drug Topics Red Book are reasonable payments. There is also a significant difference between the volume of EPO costs and separately billable items.

4. Cost Data From Independent Facilities vs. Cost Data From Hospital-Based Facilities

Comment: One commenter questioned our use of cost data from independent facilities only, and not from hospital-based facilities.

Response: We did not use cost data for hospital-based renal facilities because we concluded that these data were not reliable or reasonable. Intermediary auditors who are conducting the current audits have reported that a substantial number of hospital renal facilities do not properly maintain statistics to allocate renal department costs. Independent renal facilities tend to control and to report their costs properly, since this is their primary source of revenues.

5. Quality of Care

Comment: One commenter reflected the dialysis community's widespread concern about the current and future quality of care.

Response: Needless to say, we share the commenter's concern about the quality of patient care. However, the issue that needs to be addressed is the price level at which patients will receive adequate dialysis. Commenters argue that the current payment level is not adequate. Once medical standards are established for dialysis treatments, the inputs necessary to produce the desired level of dialysis can be quantified and we will reevaluate payment rates.

6. Improving Data Quality and Program Administration for Dialysis Services

Comment: ProPAC was concerned that services that should be incorporated under the composite rate might be paid for separately because of inadequate coordination within fiscal intermediaries and across fiscal intermediaries and carriers. ProPAC recommended that HCFA develop a list of services for inclusion within the composite rate. As a result of HCFA's response in the proposed rule, ProPAC acknowledges the need to accommodate different modes of dialysis and the variation in local medical practice patterns in services under the composite rate; ProPAC, therefore, no longer recommends the development of a list of services paid for under that rate. ProPAC believes that HCFA should continue to explore methods to improve the comparability of data across dialysis facilities.

In contrast, two commenters expressed support for ProPAC's earlier recommendation for a list of services covered under the composite rate. The first commenter supports the recommendation for three reasons:

(1) Spelling out the bundle of services will make it possible to determine the agreed upon costs of providing dialysis treatments;

(2) There is wide variation among the Medicare intermediaries in interpreting

what services are included in the composite rate and a list would make payments more predictable and lessen uncertainty and variation; and

(3) HCFA has begun adding services to the composite rate that had been separately billable.

Response: While the commenter's first assertion may be true, we disagree with the second assertion and refer the commenter to ProPAC's more recent position that HCFA needs to accommodate different modes of dialysis and variation in local medical practice patterns in services under the composite rate and therefore no longer requests a list. Furthermore, we do not agree that HCFA has recently added many services to the composite rate; the only services that have been determined to be covered under the composite rate are services that are the same or comparable to services that have always been covered under the rate; any policy clarification did not change the coverage of services.

The other commenter in support of ProPAC's earlier request for a comprehensive list of composite rate services states that HCFA often takes advantage of the current ambiguity about the covered bundle of services by trying to force facilities to pay for new items or services that were never contemplated when the composite rate was established. An example given is that HCFA has sought to make facilities pay for the costs for intradialytic parenteral/enteral nutrition (IDPN) but has abandoned the proposal.

To the contrary, IDPN is not part of the Medicare ESRD benefit. However, parenteral/enteral nutrition (PEN) may be covered under Medicare. An ESRD facility or PEN supplier may bill Medicare separately from the composite rate for PEN solution if the patient meets all of the requirements for PEN coverage. ESRD facility staff time used to administer PEN solution is not covered by Medicare and not included in the composite rate. Since it is not covered under Medicare, it is not part of the composite rate nor may a facility bill Medicare separately for it.

Again, the services that have been determined to be covered under the composite rate are the same as services that have always been included in the composite rate; any policy clarifications did not change the scope of services encompassed. A service not already under the rate may be separately billable.

Comment: This same commenter states that our policy of allowing local Medicare contractors to determine coverage decisions on issues on which there is no national policy is inconsistent with HCFA's practice of convening centralized meetings of contractor medical directors on variations in coverage. The commenter states that these centralized meetings evade the rulemaking process HCFA must follow to make national coverage policy. The commenter states that if local variations in coverage are undesirable, then we should set national policy; conversely, if local medical directors should be setting policy, HCFA should not try to influence those decisions in their central meetings.

Response: We are not required to employ the rulemaking process in order to make national coverage policies. At times, we convene central meetings to determine whether a national policy should be issued. Sometimes national coverage policies result from these meetings. However, if the meeting participants decide no national policy is appropriate, then discretion is left to the local directors. HCFA usually issues manual instructions to implement national coverage policies. We see no inconsistency in this process.

H. Beneficiary Liability for Hospital Outpatient Services (Recommendation 21)

Recommendation: For Medicare outpatient services that are paid prospectively, beneficiary Part B coinsurance should be limited to 20 percent of the Medicare allowed payment. Until prospective payment systems can be implemented for all Medicare outpatient services, beneficiary Part B liability should be based on an estimate of 20 percent of costs.

Response in the Proposed Rule: We share ProPAC's concern that beneficiaries may be paying a disproportionate share of the total payment for hospital outpatient services under the current cost-based system. As noted above, we are in the process of developing a prospective payment system for hospital outpatient services that will be moving away from the use of hospital-specific costs and charges as a basis for payment. We believe that it would be most appropriate to make any changes to beneficiary coinsurance in conjunction with the implementation of this hospital outpatient prospective payment system. Therefore, as we develop the new payment system, we are reviewing the issue of beneficiary liability and are working to come up with an approach that will be fair to beneficiaries, while minimizing the negative financial impact on the Medicare program.

Comment: We received two comments regarding this recommendation and response. ProPAC reiterated its belief that the Secretary should not delay correcting beneficiary liability for outpatient services until the implementation of prospective payment. The other commenter shares this view and asks that an interim solution to high beneficiary copayment be adopted that would set some limits on reasonable charges.

Response: We understand the concern expressed by the two commenters. However, we continue to believe that a meaningful solution to the high level of beneficiary liability can be achieved most quickly through the implementation of a prospective payment system in the near future. The time and effort needed to develop an interim solution might detract from the development of a prospective payment system that would make possible an equitable solution for all parties.

I. Nursing Facility Wage Index (Recommendation 22)

Recommendation: The Secretary should collect data on employee compensation and paid hours of employment for nursing facilities that care for Medicare beneficiaries. Once these data become available, the Secretary should develop a nursing facility wage index, and use it to adjust Medicare skilled nursing facility (SNF) payments.

Response in the Proposed Rule: We have no way of knowing what impact a SNF wage index would have on payment for individual SNFs. A change in the wage index would undoubtedly impact SNFs positively in some areas, while posing a disadvantage for SNFs in other areas (possibly a major one). Considering this impact, as well as our serious concerns about developing an accurate SNF wage index and the reporting burden imposed on HCFA, the intermediaries, and the providers (based on our prior attempts to develop and implement a home health agency (HHA) specific wage index), we believe it would be inappropriate to initiate data collection, development and implementation of a SNF-specific wage index at this time.

In 1988 we implemented an HHA specific wage index based on data received from HHAs. Subsequently, HCFA and Congress received numerous provider complaints concerning the burden that the reporting requirements posed and the accuracy of the data. As a result, Congress passed legislation that repealed the mandate for the Secretary to develop the HHA wage index. Instead, the hospital wage index was again mandated for HHAs. This legislation had a retroactive effective

date requiring HCFA to develop and issue new cost limits using the hospital wage index. These new limits were then applied retroactively to one period and to future periods, causing confusion among both providers and fiscal intermediaries.

Based on the HHA experience, we believe SNFs would have similar difficulty developing and maintaining the data needed for HCFA to develop an accurate SNF wage index. In particular, the reporting burden on the smaller freestanding SNFs (especially rural SNFs), which do not have the sophisticated accounting systems that hospitals have, would be significant and would reduce the accuracy of the data.

In addition, the reporting burden would be a disincentive for SNFs electing low-volume prospective payment to continue participation in the Medicare program, resulting in a reduction in access to SNF care for Medicare beneficiaries. This would be true especially in rural areas. SNFs that elect this alternative payment system do so primarily to avoid the large reporting burden associated with the normal cost reimbursement system. Finally, auditing and/or verifying the data would place a burden on Medicare fiscal intermediaries.

We believe it would be inadvisable to adopt a SNF-specific wage index that would not be as accurate as the current hospital wage index. In addition, even before a SNF wage index could be implemented, the Medicare program, SNFs, and the fiscal intermediaries would be impacted negatively by the reporting burden required by this recommendation. Consequently, we believe the major effort necessary to collect data and construct a wage index would be an inappropriate use of scarce government resources.

In addition, at the direction of Congress (section 4008(k) of Public Law 101–508), HCFA is currently developing a prospective payment system for SNFs that will include a methodology to account for geographic variations in prevailing wage levels. Rather than expending a major effort to develop a wage index for the current SNF retrospective reimbursement system, we would focus our efforts on the development of a new prospective payment system. Consequently, we recommend continued use of the hospital wage index until the current SNF payment system is replaced.

Comment: ProPAC continues to recommend that data be collected and the impact of a SNF wage index be evaluated.

Response: The Conference Committee report accompanying Public Law 103–66 (H. R. Rep. No. 2264, 103rd Cong., 1st Sess. 745–747 (1993)) states that the conferees expect that the Secretary will begin to collect data on employee compensation and hours of employment specific to skilled nursing facilities, for potential use in development of a skilled nursing facility wage index, within 1 year of enactment.

VIII. Other Required Information

A. Paperwork Reduction Act

This document does not impose information collection and recordkeeping requirements. Consequently, it need not be reviewed by the Office of Management and Budget under the authority of the Paperwork Reduction Act of 1980 (44 U.S.C. 3501 et seq.).

B. Requests for Data From the Public

In order to respond promptly to public requests for data related to the prospective payment system, we have set up a process under which commenters can gain access to the raw data on an expedited basis. Generally, the data are available in computer tape format or cartridges; however, some files are available on diskette. In our May 26, 1993 proposed rule, we published a list of data sets that are available for purchase (58 FR 30261). We received one comment concerning this process.

Comment: One commenter expressed concern about two of the public use files available from HCFA. The commenter stated that the 12/92 update of the provider-specific file has 0 values for the disproportionate share (DSH) adjustment for the majority of DSH hospitals. In addition, the commenter is concerned about swing bed and outpatient data on the PPS-8 minimum data set (cost report data for cost reporting periods beginning on or after October 1, 1990 and before October 1, 1991). The commenter believes that we should make available accurate files used in developing the proposed rule.

Response: We make every effort to ensure that the data used to develop the proposed rule are accurate and available on a timely basis. The DSH adjustment factor variable on the provider-specific file is no longer used, either in pricing bills or in the rulemaking process. We now use, both in the prospective payment system Pricer program and in the rulemaking process, the DSH patient percentage (composed of the Medicaid patient percentage and the SSI percentage), and compute the relevant operating and capital DSH adjustment factors. As a result, fiscal intermediaries may not be filling in the DSH adjustment factor field of the provider-specific file.

With regard to the PPS–8 minimum data set, we note that none of the fields about which the commenter is concerned were used in developing the proposed rule. Instead, we used discharge data from the Medicare Provider Analysis and Review (MedPAR) file for FY 1992, because we believe that discharges over a consistent Federal fiscal year (which are subject to the same payment rules and GROUPER), rather than over varying hospital cost reporting periods, provide a more accurate estimate of the cases for a future Federal fiscal year. The only data that we used from the cost reports are the number of beds, and patient days for those providers for which an operating teaching factor is reported (a resident-to-bed ratio) but no capital factor is reported (which requires the ratio of residents to average daily census). For this final rule, we used the PPS–8 cost reports in part to determine the cost inflation factor used in estimating the outlier thresholds (as described in the Addendum to this regulation), but we adjusted for errors in the swing bed discharge field, and are confident that our cost inflation factor accurately represents the change in hospital costs per case.

Even though the minimum data set has minimal use in developing the prospective payment system rule, it is used for other hospital analyses and we are therefore concerned about its accuracy. The cost report data are put through a range of edits before being included in the minimum data set. The edits are both fatal (that is, the data will not be included if the data that triggered the edit are not corrected) and advisory (the fiscal intermediary must either correct the data or reaffirm that the data are correct). We are aware of the difficulties with the swing bed discharge data and are currently refining our edit process in order to eliminate the problem. The outpatient capital reduction amount included in the minimum data set is currently computed by us rather than submitted directly. There is a programming problem related to its computation, and we are working to correct this field. This does not affect program payments as determined in the cost report settlement process.

C. Response to Comments

Because of the large number of items of correspondence we normally receive on FR documents published for comment, we are not able to acknowledge or respond to them individually. We will consider all

comments we receive by the date and time specified in the "DATES" section of this preamble, and, if we proceed with a subsequent document, we will respond to the comments in the preamble to that document. Comments on changes to the May 26, 1993 proposed rule resulting from provisions of the Omnibus Budget Reconciliation Act of 1993 will be considered if we receive them by the date specified in the "DATES" section of this preamble. We will not consider comments concerning provisions that remain unchanged from the May 26, 1993 proposed rule or on provisions that were changed based on public comments.

List of Subjects

42 CFR Part 412

Administrative practice and procedure, Health facilities, Medicare, Puerto Rico, Reporting and recordkeeping requirements.

42 CFR Part 413

Health facilities, Kidney diseases, Medicare, Puerto Rico, Reporting and recordkeeping requirements.

42 CFR chapter IV is amended as follows:

A. Part 412 is amended as follows:

PART 412—PROSPECTIVE PAYMENT SYSTEMS FOR INPATIENT HOSPITAL SERVICES

1. The authority citation for part 412 continues to read as follows:

Authority: Secs. 1102, 1815(e), 1820, 1871, and 1886 of the Social Security Act (42 U.S.C. 1302, 1395g(e), 1395i-4, 1395hh, and 1395ww).

Subpart A—General Provisions

2. In paragraph (a) of § 412.1, the third sentence is revised, and an additional sentence is added after the revised third sentence to read as follows:

§ 412.1 Scope of part.

(a) * * * Payment for other costs related to inpatient hospital services (organ acquisition costs incurred by hospitals with approved organ transplantation centers, the costs of qualified nonphysician anesthetist's services, as described in § 412.113(c), and direct costs of approved nursing and allied health educational programs) is made on a reasonable cost basis. Payment for the direct costs of graduate medical education is made on a per resident amount basis in accordance with § 413.86 of this chapter. * * *

* * * * *

3. Section 412.2 is amended as follows:

a. Paragraph (b)(2)(i) is revised.

b. In paragraph (f)(8), the phrase "For discharges on or after June 19, 1990 and before December 19, 1991," is revised to read "For discharges on or after June 19, 1990, and before October 1, 1994,".

The revision is to read as follows:

§ 412.2 Basis of payment.

* * * * *

(b) * * *

(2) * * *

(i) Limitation of liability days payable under the payment procedures for custodial care and services that are not reasonable and necessary as specified in § 411.400 of this chapter.

* * * * *

Subpart B—Hospital Services Subject To and Excluded From the Prospective Payment Systems for Inpatient Operating Costs and Inpatient Capital-Related Costs

4. In § 412.25, paragraph (a)(1) is revised and paragraph (d) is added to read as follows:

§ 412.25 Excluded distinct part hospital units: Common requirements.

(a) * * *

(1) Be part of an institution that—

(i) Has in effect an agreement under part 489 of this chapter to participate as a hospital;

(ii) Is not excluded in its entirety from the prospective payment systems; and

(iii) Has enough beds that are not excluded from the prospective payment systems to permit the provision of adequate cost information, as required by § 413.24(c) of this chapter.

* * * * *

(d) *Number of excluded units.* Each hospital may have only one unit of each type (psychiatric or rehabilitation) excluded from the prospective payment systems.

Subpart D—Basic Methodology for Determining Prospective Payment Federal Rates for Inpatient Operating Costs

§ 412.62 [Amended]

5. In § 412.62(c)(2), the parenthetical phrase "(as defined in § 413.40(c)(3) of this chapter)" is revised to read "in the hospital market basket".

6. Section 412.63 is amended as follows:

a. In paragraph (c)(2)(i), the phrase "under § 413.40(c) of this chapter;" is revised to read "in the hospital market basket;";

b. In paragraph (g) introductory text, the parenthetical phrase "(as described in § 413.40(c)(3)(ii))—" is revised to read "(as defined in § 413.40(a)(3) of this chapter)—";

c. In the introductory text of paragraphs (j) and (k), the parenthetical phrase "(generally described in § 413.40(c)(3)(ii) of this subchapter)—" is revised to read "(as defined in § 413.40(a)(3) of this chapter)—"; and

d. Paragraphs (l) and (m) are revised, paragraphs (n) through (p) are redesignated as paragraphs (q) through (s), new paragraphs (n) through (p) are added, and redesignated paragraph (s)(2) is revised to read as follows:

§ 412.63 Federal rates for inpatient operating costs for fiscal years after Federal fiscal year 1984.

* * * * *

(l) *Applicable percentage change for fiscal year 1994.* The applicable percentage change for fiscal year 1994 is the percentage increase in the market basket index for prospective payment hospitals (as defined in § 413.40(a) of this chapter)—

(1) Minus 1.0 percentage point for hospitals located in rural areas.

(2) Minus 2.5 percentage points for hospitals located in large urban areas and other urban areas.

(m) *Applicable percentage change for fiscal year 1995.* The applicable percentage change for fiscal year 1995 is the percentage increase in the market basket index for prospective payment hospitals (as defined in § 413.40(a) of this chapter)—

(1) Plus, for hospitals located in rural areas, the percentage increase necessary so that the average standardized amounts computed under paragraphs (c) through (i) of § 412.63 are equal to the average standardized amounts for hospitals located in an urban area other than a large urban.

(2) Minus 2.5 percentage points for hospitals located in large urban areas and other urban areas.

(n) *Applicable percentage change for fiscal year 1996.* The applicable percentage change for fiscal year 1996 is the percentage increase in the market basket index for prospective payment hospitals (as defined in § 413.40(a) of this chapter) minus 2.0 percentage points for all areas.

(o) *Applicable percentage change for fiscal year 1997.* The applicable percentage change for fiscal year 1997 is the percentage increase in the market basket index for prospective payment hospitals (as defined in § 413.40(a) of this chapter) minus 0.5 percentage point for all areas.

(p) *Applicable percentage change for fiscal year 1998 and for subsequent years.* The applicable percentage change for fiscal year 1998 and for subsequent years is the percentage increase in the market basket index for prospective

payment hospitals (as defined in § 413.40(a) of this chapter) for all areas.

* * * * *

(s) * * *

(2) If an error is discovered before October 1, 1992, in the survey data that results in a change to the wage index value for an area, the revised wage index is effective prospectively from the date the change to the wage index is made.

* * * * *

Subpart E—Determination of Transition Period Payment Rates for the Prospective Payment System for Inpatient Operating Costs

§ 412.70 [Amended]

7. In § 412.70, the phrase "For discharges occurring on or after April 1, 1988 and before October 1, 1993," is revised to read "For discharges occurring on or after April 1, 1988, and before October 1, 1996,".

8. Section 412.73 is amended as follows:

a. In paragraph (c)(1), the phrase "the target rate percentage determined under § 413.40(c)(3) of this chapter," is revised to read "the rate-of-increase percentage determined under § 413.40(c)(2) of this chapter,".

b. Paragraph (c)(9) is revised and new paragraphs (c)(10) through (c)(12) are added to read as follows:

§ 412.73 Determination of the hospital-specific rate based on a Federal fiscal year 1982 base period.

* * * * *

(c) * * *

(9) *For Federal fiscal years 1992 and 1993.* For Federal fiscal years 1992 and 1993, the update factor is the percentage increase in the market basket index for prospective payment hospitals (as defined in § 413.40(a) of this chapter). For purposes of determining the hospital-specific rate for FY 1994 and following, the FY 1993 update factor is deemed to be that factor necessary to update the hospital-specific rate from the beginning of the cost reporting period that began in FY 1993 to September 30, 1993.

(10) *For Federal fiscal year 1994.* For Federal fiscal year 1994, the update factor is the percentage increase in the market basket index for prospective payment hospitals (as defined in § 413.40(a) of the chapter) minus 2.3 percentage points.

(11) *For Federal fiscal year 1995.* For Federal fiscal year 1995, the update factor is the percentage increase in the market basket index for prospective payment hospitals (as defined in § 413.40(a) of this chapter) minus 2.2 percentage points.

(12) *For Federal fiscal years 1996 and following.* For Federal fiscal years 1996 and following, the update factor is the market basket index for prospective payment hospitals (as defined in § 413.40(a) of this chapter).

* * * * *

§ 412.75 [Amended]

9. In § 412.75(d), the phrase "the update factor is determined using the methodology set forth in § 412.73 (c)(5) through (c)(9)." is revised to read "the update factor is determined using the methodology set forth in § 412.73 (c)(5) through (c)(12)."

Subpart G—Special Treatment of Certain Facilities Under the Prospective Payment System for Inpatient Operating Costs

§ 412.96 [Amended]

10. In § 412.96(g)(2), the phrase "HCFA discontinues the adjustment beginning on the first day of the hospital's next cost reporting period beginning on or after October 1, 1992." is revised to read "HCFA discontinues the adjustment beginning on the first day of the hospital's next cost reporting period beginning on or after October 1, 1994."

§ 412.98 [Amended]

11. In § 412.98(b), in the first sentence, the phrase "under § 413.40(c)(4) of this chapter" is revised to read "under § 413.40(c)(3) of this chapter".

12. Section 412.102 is revised to read as follows:

§ 412.102 Special treatment: Hospitals reclassified as rural.

Effective on or after October 1, 1983, a hospital reclassified as rural, as defined in § 412.62(f), may receive an adjustment to its rural Federal payment amount for operating costs for two successive fiscal years.

(a) *First year adjustment.* The hospital's rural average standardized amount and disproportionate share payments as described in § 412.106 are adjusted on the basis of an additional amount that equals two-thirds of the difference between the urban standardized amount and disproportionate share payments applicable to the hospital before its reclassification and the rural standardized amount and disproportionate share payments otherwise applicable to the Federal fiscal year for which the adjustment is made.

(b) *Second year adjustment.* If a hospital continues to be reclassified as rural, its rural average standardized amount and disproportionate share payments are adjusted on the basis of an additional amount that equals one-third of the difference between the urban standardized amount and disproportionate share payments applicable to the hospital before its reclassification and the rural standardized amounts and disproportionate share payments otherwise applicable to the Federal fiscal year for which the adjustment is made.

13. In § 412.105, paragraphs (g)(1)(ii) and (g)(1)(iii), and paragraph (g)(2)(v) are revised to read as follows:

§ 412.105 Special treatment: Hospitals that incur indirect costs for graduate medical education programs.

* * * * *

(g) * * *

(1) * * *

(ii) In order to be counted, the resident must be assigned to one of the following areas:

(A) The portion of the hospital subject to the prospective payment system.

(B) The outpatient department of the hospital.

(C) For discharges occurring on or after August 10, 1993, any entity receiving a grant under section 330 of the Public Health Service Act that is under the ownership or control of the hospital (if the hospital incurs all, or substantially all, of the costs of the services furnished by those residents).

(iii) Full-time equivalent status is based on the total time necessary to fill a residency slot. No individual may be counted as more than one full-time equivalent. If a resident is assigned to more than one hospital, the resident counts as a partial full-time equivalent based on the proportion of time worked in any of the areas of the hospital listed in paragraph (g)(1)(ii) of this section, to the total time worked by the resident. A part-time resident or one working in an area of the hospital other than those listed under paragraph (g)(1)(ii) of this section (such as a freestanding family practice center or an excluded distinct part hospital unit) would be counted as a partial full-time equivalent based on the proportion of time assigned to an area of the hospital listed in paragraph (g)(1)(ii) of this section, compared to the total time necessary to fill a full-time internship or residency slot.

* * * * *

(2) * * *

(v) The proportion of the total time necessary to fill a residency slot that the resident is assigned to an area of the hospital listed under paragraph (g)(1)(ii) of this section.

* * * * *

14. Section 412.108 is amended as follows:

a. In paragraph (a)(1), the phrase "For cost reporting periods beginning on or after April 1, 1990 and ending before April 1, 1993," is revised to read "For cost reporting periods beginning on or after April 1, 1990, and before October 1, 1994,".

b. In paragraph (a)(2), the two sentences should be combined to make one single paragraph. At the end of the first sentence of the paragraph, the phrase "under §§ 412.25 through 412.32" is revised to read "under §§ 412.25 through 412.30".

c. Paragraph (c) is revised to read as follows:

§ 412.108 Special treatment: Medicare-dependent, small rural hospitals.

* * * * *

(c) *Payment methodology.* A hospital that meets the criteria in paragraph (a) of this section is paid for its inpatient operating costs the sum of paragraphs (c)(1) and (c)(2) of this section.

(1) The Federal payment rate applicable to the hospital as determined under § 412.63, subject to the regional floor defined in § 412.70(c)(6).

(2) The amount, if any, determined as follows:

(i) For discharges occurring during the first three 12-month cost reporting periods that begin on or after April 1, 1990, 100 percent of the amount that the Federal rate determined under paragraph (c)(1) of this section exceeds the higher of the following:

(A) The hospital-specific rate as determined under § 412.73.

(B) The hospital-specific rate as determined under § 412.75.

(ii) For discharges occurring during any subsequent cost reporting period (or portion thereof) and before October 1, 1994, 50 percent of the amount that the Federal rate determined under paragraph (c)(1) of this section exceeds the higher of the following:

(A) The hospital-specific rate as determined under § 412.73.

(B) The hospital-specific rate as determined under § 412.75.

* * * * *

Subpart H—Payments to Hospitals Under the Prospective Payment Systems

§ 412.115 [Amended]

15. In § 412.115(b), the phrase "For discharges on or after June 19, 1990, and before December 19, 1991," is revised to read "For discharges on or after June 19, 1990, and before October 1, 1994,".

Subpart L—The Medicare Geographic Classification Review Board

16. In § 412.230, paragraph (e)(2)(ii) introductory text is republished, and paragraph (e)(2)(ii)(B) is revised to read as follows:

§ 412.230 Criteria for an individual hospital seeking redesignation to another rural area or an urban area

* * * * *

(e) * * *

(2) * * *

(ii) For data of other hospitals, the hospital must provide the data concerning the following: * * *

(B) If the hospital is requesting reclassification under § 412.230(e)(1)(iii)(B), occupational-mix data to demonstrate the average occupational mix for each employment category in the adjacent area. Occupational-mix data can be obtained from surveys conducted by the American Hospital Association.

17. In § 412.232, paragraph (b) is revised, paragraph (d)(2)(ii) introductory text is republished and paragraph (d)(2)(ii)(B) is revised to read as follows:

§ 412.232 Criteria for all hospitals in a rural county seeking urban redesignation.

* * * * *

(b) *Metropolitan character.* The group of hospitals must demonstrate that the county in which the hospitals are located meets the standards for redesignation to an MSA or an NECMA as an outlying county that were published in the **Federal Register** on March 30, 1990 (55 FR 12154) using Bureau of the Census data or Bureau of Census estimates made after 1990.

* * * * *

(d) * * *

(2) * * *

(ii) For data of other hospitals, the hospitals must provide the following: * * *

(B) Occupational-mix data to demonstrate the average occupational mix for each employment category in the adjacent area. Occupational-mix data can be obtained from surveys conducted by the American Hospital Association.

18. In § 412.234, paragraph (b) is revised to read as follows:

§ 412.234 Criteria for all hospitals in an urban county seeking redesignation to another urban area.

* * * * *

(b) *Wage criteria.* In applying the following numeric criteria, rounding of numbers to meet the qualifying percentages is not permitted.

(1) *Aggregate hourly wage.* The aggregate average hourly wage of all hospitals in the urban county must be at least 85 percent of the average hospital hourly wage in the MSA or NECMA to which the hospitals in the county seek reclassification; or

(2) *Aggregate hourly wage weighted for occupational mix.* The aggregate average hourly wage of all hospitals in the urban county, weighted for occupational categories, is at least 90 percent of the occupationally adjusted hourly wage, in the MSA or NECMA to which the hospitals in the county seek reclassification.

* * * * *

Subpart M—Prospective Payment System for Inpatient Hospital Capital Costs

19. In § 412.308, paragraph (b) is revised to read as follows:

§ 412.308 Determining and updating the Federal rate.

* * * * *

(b) *Standard Federal rate.* The standard Federal rate is used to determine the Federal rate for each fiscal year in accordance with the formula specified in paragraph (c) of this section.

(1) HCFA determines the standard Federal rate by adjusting the FY 1992 updated national average cost per discharge by a factor so that estimated aggregate payments based on the standard Federal rate adjusted by the payment adjustments described in § 412.312(b) equal estimated aggregate payments based solely on the national average cost per discharge.

(2) Effective FY 1994, the standard Federal rate used to determine the Federal rate each year under paragraph (c) of this section is reduced by 7.4 percent.

* * * * *

20. In § 412.320, paragraph (b)(2) is revised to read as follows:

§ 412.320 Disproportionate share adjustment factor.

* * * * *

(b) * * *

(2) If a hospital meets the criteria in § 412.106(c)(2) for purposes of hospital inpatient operating prospective payments, the disproportionate share adjustment factor is the factor that results from deeming the hospital to have the same disproportionate share patient percentage that would yield its operating disproportionate share adjustment.

21. In § 412.336, paragraph (d) is added to read as follows:

§ 412.336 Transition period payment methodologies.

* * * * *

(d) *Special Rule for Redetermination of Hospital Payment Methodology.* For cost reporting periods beginning on or after October 1, 1993, the intermediary redetermines the hospital payment methodologies to take into account the reduction to the standard Federal rate provided in § 412.308(b)(2):

(1) For a hospital paid under the fully prospective payment methodology in the last hospital cost reporting period beginning before October 1, 1993, the intermediary compares the hospital's FY 1994 hospital-specific rate with the hospital's FY 1994 Federal rate (after taking into account the estimated effect of the payment adjustments and outlier payments).

(i) A hospital with a FY 1994 hospital-specific rate that is above the FY 1994 adjusted Federal rate is paid under the hold-harmless payment methodology described in § 412.344.

(ii) Subject to the provisions of § 412.328(f), a hospital with a FY 1994 hospital-specific rate that is below the FY 1994 adjusted Federal rate continues to be paid under the fully prospective payment methodology as described in § 412.340.

(iii) The intermediary notifies the hospital of the new determination of the hospital's payment methodology within 90 days of the hospital's first cost reporting period beginning on or after October 1, 1993. The new determination is effective to the beginning of the hospital's first cost reporting period beginning on or after October 1, 1993.

(2) A hospital paid under the hold-harmless payment methodology in the last cost reporting period beginning before October 1, 1993, will continue to be paid in accordance with the provisions of § 412.344.

B. Part 413 is amended as follows:

PART 413—PRINCIPLES OF REASONABLE COST REIMBURSEMENT; PAYMENT FOR END-STAGE RENAL DISEASE SERVICES

1. The authority citation for part 413 is revised to read as follows:

Authority: Secs. 1102, 1814(b), 1815, 1833(a), (i), and (n), 1861(v), 1871, 1881, 1883, and 1886 of the Social Security Act (42 U.S.C. 1302, 1395f(b), 1395g, 1395l(a), (i), and (n), 1395x(v), 1395hh, 1395rr, 1395tt, and 1395ww); sec. 104(c) of Pub. L. 100–360 as amended by sec. 608(d)(3) of Pub. L. 100–485 (42 U.S.C. 1395ww (note)); and sec. 101(c) of Pub. L. 101–234 (42 U.S.C. 1395ww (note)).

Subpart C—Limits on Cost Reimbursement

2. Section 413.40 is revised to read as follows:

§ 413.40 Ceiling on the rate of increase in hospital inpatient costs.

(a) *Introduction*—(1) *Scope.* This section implements section 1886(b) of the Act, establishing a ceiling on the rate of increase in operating costs per case for hospital inpatient services furnished to Medicare beneficiaries that will be recognized as reasonable for purposes of determining the amount of Medicare payment. This rate-of-increase ceiling applies to hospital cost reporting periods beginning on or after October 1, 1982. This section also sets forth rules governing exemptions from and adjustments to the ceiling.

(2) *Applicability.* (i) This section is not applicable to—

(A) Hospitals reimbursed in accordance with section 1814(b)(3) of the Act or under State reimbursement control systems that have been approved under section 1886(c) of the Act and subpart C of part 403 of this chapter; or

(B) Hospitals that are paid under the prospective payment systems for inpatient hospital services in accordance with section 1886 (d) and (g) of the Act and part 412 of this chapter.

(ii) For cost reporting periods beginning on or after October 1, 1983, this section applies to hospitals excluded from the prospective payment system in accordance with § 412.23 of this chapter, and psychiatric and rehabilitation units (distinct parts) excluded from the prospective payment system in accordance with §§ 412.25 through 412.30 of this chapter.

(3) *Definitions.* As used in this section—

Ceiling is the aggregate upper limit on the amount of a hospital's net Medicare inpatient operating costs that the program will recognize for payment purposes. For each cost reporting period, the ceiling is determined by multiplying the updated target amount, as defined in this paragraph, for that period by the number of Medicare discharges during that period.

Date of discharge is the earliest of the following dates:

(A) The date the patient has exhausted Medicare Part A hospital inpatient benefits (including the election to use lifetime reserve days) during his or her spell of illness.

(B) The date the patient is formally released as specified in § 412.4(a)(1) of this chapter.

(C) The date the patient is transferred to another facility.

(D) The date the patient dies.

Market basket index is HCFA's projection of the annual percentage increase in hospital inpatient operating costs. The market basket index is a wage and price index that incorporates weighted indicators of changes in wages and prices that are representative of the mix of goods and services included in the most common categories of hospital inpatient operating costs subject to the ceiling, as described in paragraph (c)(1) of this section.

Net inpatient operating costs include the costs of routine services, ancillary services, and intensive care services (as defined in § 413.53(b)) incurred by a hospital in furnishing covered inpatient services to Medicare beneficiaries. Net inpatient operating costs exclude capital-related costs as described in § 413.130, the costs of approved medical education programs as described in §§ 413.85 and 413.86, and heart, kidney, and liver acquisition costs incurred by approved transplantation centers. These costs are identified and excluded from inpatient operating costs before the application of the ceiling.

Rate-of-increase percentage is the percentage by which each hospital's target amount from the preceding Federal fiscal year is increased.

Target amount is the per discharge (case) limitation, derived from the hospital's allowable net Medicare inpatient operating costs in the hospital's base year, and updated for each subsequent hospital cost reporting period by the appropriate annual rate-of-increase percentage.

Update adjustment percentage is the percentage by which a hospital's allowable inpatient operating service costs for the 12-month cost reporting period beginning in Federal fiscal year 1990 exceeds the hospital's ceiling for that period.

Update factor is the decimal equivalent of the rate-of-increase percentage. The update factor is the value by which a hospital's target amount for the preceding year is multiplied in order to determine the target amount for the following year. For example, if the rate-of-increase percentage for a year is 2.7 percent, the update factor for that year is 1.027.

(b) *Cost reporting periods subject to the rate-of-increase ceiling*—(1) *Base period.* Each hospital's target amount is based on its allowable net inpatient operating costs per case from the cost reporting period of at least 12 months immediately preceding the first cost reporting period subject to the rate-of-increase ceiling established under this section. If the immediately preceding cost reporting period is a short reporting

period (fewer than 12 months), the first period of at least 12 months subsequent to that short period is the base period.

(i) The target amount established under this provision remains applicable to a hospital or excluded distinct part hospital unit, as described in §§ 412.25 through 412.30 of this chapter, despite intervening cost reporting periods during which the hospital or excluded distinct part hospital unit is not subject to the ceiling as a result of other provisions of the law or regulations, or nonparticipation in the Medicare program, unless the hospital or excluded distinct part hospital unit qualifies as a new hospital or excluded distinct part hospital unit under the provisions of paragraph (f) of this section.

(ii) The base period for a newly established excluded distinct part unit is the first cost reporting period of at least 12 months following the unit's certification to participate in the Medicare program.

(iii) When the operational structure of a hospital or distinct part unit changes (that is, a freestanding hospital becomes a distinct part unit or vice versa) the base period is the first cost reporting period of at least 12 months effective with the revised Medicare certification classification.

(2) *Periods subject to the ceiling.* The ceiling established under this section applies to all cost reporting periods that—

(i) Begin on or after October 1, 1982; and

(ii) Immediately follow the base period established under paragraph (b)(1) of this section unless the exception in paragraph (b)(3) of this section is applicable.

(3) *Periods of other than 12 months.* The ceiling established under this section does not apply to cost reporting periods of fewer than 12 months that occur in conjunction with a change in operation of the facility, as defined in paragraph (b)(1)(iii) of this section, as a result of changes in ownership, merger, or consolidation. However, the ceiling applies to cost reporting periods of fewer than 12 months that result solely from the approval of a hospital's request for a change in accounting cycle, as specified in § 413.24(f)(3).

(c) *Costs subject to the ceiling*—(1) *Applicability.* The ceiling established under this section applies to net operating costs incurred by a hospital in furnishing inpatient hospital services to Medicare beneficiaries.

(2) *Rate-of-increase percentages and update factors.* The applicable rate-of-increase percentages and update factors are determined as follows:

(i) *Federal fiscal year 1986.* The applicable rate-of-increase percentage for cost reporting periods beginning on or after October 1, 1985 and before September 30, 1986 is five twenty-fourths of one percent, and the update factor is 1.00208333. For purposes of determining the target amount for cost reporting periods beginning on or after October 1, 1986, the applicable percentage increase for cost reporting periods beginning during Federal fiscal year 1986 is deemed to have been one-half percent, and the update factor is 1.005.

(ii) *Federal fiscal year 1987.* The applicable rate-of-increase percentage for cost reporting periods beginning on or after October 1, 1986 and before September 30, 1987 is 1.15 percent; the update factor is 1.0115.

(iii) *Federal fiscal year 1988.* The applicable rate-of-increase percentage for cost reporting periods beginning on or after October 1, 1987 and before October 1, 1988 is 2.3238 percent; the update factor is 1.023238. For purposes of updating the target amount for cost reporting periods beginning on or after October 1, 1988, the rate-of-increase percentage for cost reporting periods beginning during FY 1988 is deemed to have been 2.7 percent; the update factor is deemed to have been 1.027.

(iv) *Federal fiscal year 1989 through Federal fiscal year 1993.* The applicable rate-of-increase percentage for cost reporting periods beginning on or after October 1, 1988, and before October 1, 1993, is the percentage increase projected by the hospital market basket index (as defined in paragraph (a)(3) of this section).

(v) *Federal fiscal year 1994 through Federal fiscal year 1997.* The applicable rate-of-increase percentage for cost reporting periods beginning on or after October 1, 1993, and before October 1, 1998, is the market basket percentage increase minus the lesser of, 1 percentage point, or the percentage point difference between 10 percent and the hospital's "update adjustment percentage" (as defined in paragraph (a)(3) of this section); for hospitals with an "update adjustment percentage" of at least 10 percent, the applicable rate-of-increase percentage is the market basket percentage increase. The "update adjustment percentage" is increased in each Federal fiscal year by the sum of the hospital's applicable reductions applied to the market basket percentage increase for previous Federal fiscal years.

(vi) *Federal fiscal year 1998 and following.* The applicable rate-of-increase percentage for cost reporting periods beginning on or after October 1, 1998, is the percentage increase projected by the hospital market basket index.

(3) *Target amount.* The intermediary will establish a target amount for each hospital. The target amount for each cost reporting period is determined as follows:

(i) For the first cost reporting period to which this ceiling applies, the target amount equals the hospital's allowable net inpatient operating costs per case for the hospital's base period increased by the update factor for the subject period.

(ii) For subsequent cost reporting periods, the target amount equals the hospital's target amount for the previous cost reporting period increased by the update factor for the subject cost reporting period, unless the provisions of paragraph (c)(4)(ii) of this section apply.

(4) *Applicable update factor.* (i) The applicable update factor is derived from the prospectively determined rate-of-increase percentage published by HCFA. The update factor for each Federal fiscal year is applied prospectively to the target amount for each cost reporting period beginning during the Federal fiscal year.

(ii) In the case of cost reporting periods of less than 12 months, the target amount determined for a hospital's first cost reporting period beginning in a Federal fiscal year applies to subsequent periods beginning in the same Federal fiscal year.

(d) *Application of the target amount in determining the amount of payment*—(1) *General process.* (i) At the end of each cost reporting period subject to this section, the hospital's intermediary will compare a hospital's allowable net inpatient operating costs with that hospital's ceiling (as defined in paragraph (a)(3) of this section) for that period.

(ii) The hospital's actual allowable costs will be determined without regard to the lesser of cost or charges provisions of § 413.13, and in accordance with the provisions of paragraphs (d)(2) or (d)(3) of this section, as applicable.

(2) *Net inpatient operating costs are less than or equal to the ceiling.* If a hospital's allowable net inpatient operating costs do not exceed the hospital's ceiling, payment to the hospital will be determined on the basis of the lower of the—

(i) Net inpatient operating costs plus 50 percent of the difference between inpatient operating costs and the ceiling; or

(ii) Net inpatient operating costs plus 5 percent of the ceiling.

(3) *Net inpatient operating costs are greater than the ceiling.* For cost reporting periods beginning on or after October 1, 1991, if a hospital's allowable net inpatient operating costs exceed the hospital's ceiling, payment will be based on the lower of the—

(i) Ceiling plus 50 percent of the allowable net inpatient operating costs in excess of the ceiling; or

(ii) 110 percent of the ceiling.

(e) *Hospital requests regarding adjustments to the payment allowed under the rate-of-increase ceiling*—(1) *Timing of application.* A hospital may request an adjustment to the rate-of-increase ceiling imposed under this section. The hospital's request to its fiscal intermediary may be made upon receipt of the intermediary's notice of amount of program reimbursement (NPR) and must be made no later than 180 days after the date on the intermediary's NPR for the cost reporting period for which the hospital requests an adjustment.

(2) *Intermediary recommendation.* Unless HCFA has authorized the intermediary to make the decision, the intermediary makes a recommendation on the hospital's request to HCFA, which makes the decision. HCFA issues a decision to the intermediary no later than 180 days after receipt of the completed application and the intermediary's recommendation.

(3) *Intermediary decision.* If HCFA has authorized the intermediary to make the decision, the intermediary issues a decision no later than 180 days after receipt of the completed application.

(4) *Notification and review.* (i) The intermediary notifies the hospital of the decision, including a full explanation of the grounds for the decision. A decision issued under paragraph (e)(2) or (e)(3) of this section is considered final unless the hospital submits additional information and requests a review of the decision no later than 180 days after the date on the intermediary's notice of the decision.

(ii) The final decision is subject to review under the provider reimbursement determination and appeal procedures in subpart R of part 405 of this chapter, provided the hospital has received an NPR for the cost reporting period in question, and the NPR disallows costs for which the hospital had requested an adjustment (see the definitions in § 405.1801(a) of this chapter and the provisions regarding a provider's right to a Board hearing in § 405.1835 of this chapter).

(5) *Extending time limit for PRRB review of NPR.* The time required to review the request is considered good cause for the granting of an extension of the time limit to apply for review of the notice of amount of program reimbursement by the Provider Reimbursement Review Board, as specified in § 405.1841(b) of this chapter.

(6) *Applicability.* The provisions in paragraphs (e)(1) through (e)(5) of this section apply to a hospital's initial request for an adjustment and to a request for a review of the original decision based on additional data.

(f) *Exemptions*—(1) *New hospitals.* (i) A new hospital is exempt from the rate-of-increase ceiling imposed under this section. The exemption begins when the hospital accepts its first patient and ends at the end of the first cost reporting period ending at least 2 years after the hospital accepts its first patient. The first cost reporting period of at least 12 months beginning at least 1 year after the hospital accepts its first patient is the base year, in accordance with paragraph (b) of this section. For purposes of this section, a new hospital is a provider of hospital inpatient services that—

(A) Has operated as the type of hospital for which HCFA granted it approval to participate in the Medicare program, under present or previous ownership (or both), for less than two full years; and

(B) Has provided the type of hospital inpatient services for which HCFA granted it approval to participate in the Medicare program, for less than two years.

(ii) Within 180 days of the date a hospital is excluded from the prospective payment system, the intermediary determines whether the hospital is exempt from the rate-of-increase ceiling. The intermediary notifies the hospital of its determination and the hospital's base period.

(iii) A decision issued under paragraph (f)(1) of this section is considered final unless the hospital submits additional information and requests a review of the decision no later than 180 days after the date on the intermediary's notice of the decision. The final decision is subject to review under the provider reimbursement determination and appeal procedures in subpart R of part 405 of this chapter, provided the hospital has received an NPR for the cost reporting period in question and the NPR does not reflect an exemption (see the definitions in § 405.1801(a) of this chapter and the provisions regarding a provider's right to a Board hearing in § 405.1835 of this chapter).

(2) *New distinct part units.* A newly established distinct part unit that is excluded from the prospective payment system under the provisions of §§ 412.25 through 412.30 of this chapter does not qualify for the exemption afforded to a new hospital under paragraph (f)(1) of this section unless the distinct part unit is located in an acute care hospital that, if it were subject to the provisions of this section, would qualify as a new hospital under paragraph (f)(1) of this section.

(3) *Risk-basis HMOs.* Items or services that are furnished to beneficiaries enrolled in an HMO by a hospital that is either owned or operated by a risk-basis HMO or related to a risk-basis HMO by common ownership or control are exempt from the rate-of-increase ceiling (see the definition of an entity with a risk sharing contract in § 417.401 of this chapter).

(g) *Adjustments*—(1) *General rule.* HCFA may adjust the amount of the operating costs considered in establishing the rate-of-increase ceiling for one or more cost reporting periods, including both periods subject to the ceiling and the hospital's base period, under the circumstances specified below. When an adjustment is requested by the hospital, HCFA makes an adjustment only to the extent that the hospital's operating costs are reasonable, attributable to the circumstances specified, separately identified by the hospital, and verified by the intermediary. HCFA may grant an adjustment requested by the hospital only if a hospital's operating costs exceed the rate-of-increase ceiling imposed under this section.

(2) *Extraordinary circumstances.* HCFA may make an adjustment to take into account unusual costs (in either a cost reporting period subject to the ceiling or the hospital's base period) due to extraordinary circumstances beyond the hospital's control. These circumstances include, but are not limited to, strikes, fire, earthquakes, floods, or similar unusual occurrences with substantial cost effects.

(3) *Comparability of cost reporting periods*—(i) *Adjustment for distortion.* HCFA may make an adjustment to take into account factors that would result in a significant distortion in the operating costs of inpatient hospital services between the base year and the cost reporting period subject to the limits.

(ii) *Factors.* The adjustments described in paragraph (g)(3)(i) of this section, include, but are not limited to, adjustments to take into account:

(A) FICA taxes (if the hospital did not incur costs for FICA taxes in its base period).

(B) Services billed under part B of Medicare during the base period, but

paid under part A during the subject cost reporting period.

(C) Malpractice insurance costs (if malpractice costs were not included in the base year operating costs).

(D) Increases in service intensity or length of stay attributable to changes in the type of patient served.

(E) A change in the inpatient hospital services that a hospital provides, and that are customarily provided directly by similar hospitals, such as an addition or discontinuation of services or treatment programs.

(F) The manipulation of discharges to increase reimbursement.

(iii) *Adjusting operating costs.* Without a formal request from a hospital, HCFA may adjust the amount of operating costs determined under paragraph (c)(1) of this section to take into account certain adjustments. These adjustments include, but are not limited to, adjustments under paragraphs (g)(3)(ii) (A), (B), (C), (E), and (F) of this section.

(4) *Significant wage increase*—(i) *Criteria.* HCFA may make an adjustment to take into account a significant increase in wages occurring between the base period and the cost reporting period subject to the ceiling if there is a significant increase in the average hourly wage for the geographic area in which the hospital is located (determined by reference to the wage index for prospective payment hospitals without regard to geographic reclassifications under sections 1886(d)(8) and (10) of the Act). For this purpose, there is a significant wage increase if the wage index value based on wage survey data collected for the cost reporting period subject to the ceiling is at least 8.0 percent higher than the wage index value based on survey data collected for the base year cost reporting period. If survey data are not available for the cost reporting periods used in the comparison, the wage index value based on the latest available survey data collected prior to that cost reporting period is used.

(ii) *Amount of the adjustment.* The adjustment for a significant wage increase equals the amount by which the lesser of the following calculations exceeds 108 percent of the increase in the national average hourly earnings for hospital workers:

(A) The rate of increase in the average hourly wage in the geographic area (determined by applying the applicable increase in the area wage index value to the rate of increase in the national average hourly earnings for hospital workers).

(B) The rate of increase in the hospital's average hourly wage.

(5) *Adjustment limitations.* For cost reporting periods beginning on or after October 1, 1993, and before October 1, 1998, the payment reductions under paragraph (c)(2)(v) of this section will not be considered when determining adjustments under this paragraph.

(h) [Reserved]

(i) *Assignment of a new base period*—(1) *General rule.* (i) Effective with cost reporting periods beginning on or after April 1, 1990, HCFA may assign a new base period to establish a revised ceiling if the new base period is more representative of the reasonable and necessary cost of furnishing inpatient services and all the following conditions apply:

(A) The actual allowable inpatient costs of the hospital in the cost reporting period that would be affected by the revised ceiling exceed the target amount established under paragraph (c) of this section.

(B) The hospital documents that the higher costs are the result of substantial and permanent changes in furnishing patient care services since the base period. In making this determination, HCFA takes into consideration the following factors:

(*1*) Changes in the services provided by the hospital.

(*2*) Changes in applicable technologies and medical practices.

(*3*) Differences in the severity of illness among patients or types of patients served.

(C) The adjustments described in paragraph (g) of this section would not result in recognition of the reasonable and necessary costs of providing inpatient services.

(ii) The revised ceiling is based on the necessary and proper costs incurred during the new base period.

(A) Increases in overhead costs (for example, administrative and general costs and housekeeping costs) are not taken into consideration unless the hospital documents that these increases result from substantial and permanent changes in furnishing patient care services.

(B) In determining whether wage increases are necessary and proper, HCFA takes into consideration whether increases in wages and wage-related costs for hospitals in the labor market area exceed the national average increase.

(2) *New base period.* The new base period is the first cost reporting period that is 12 months or longer that reflects the substantial and permanent change.

(3) *New applicable rate-of-increase percentages and update factors.* The revised target amount resulting from the assignment of a new base period is increased by the applicable rate-of-increase percentages (update factors) described in paragraph (c)(2) of this section.

Subpart F—Specific Categories of Costs

3. Section 413.86 is amended as follows:

a. In paragraph (b), the definition "Primary care resident" is added, in alphabetical order.

b. Paragraph (e)(3) is revised.

c. In paragraph (g)(1), an additional sentence is added after the first sentence.

d. In paragraph (h)(2), in the second sentence, the phrase "On or before July 1, 1986 and before July 1, 1987," is revised to read "On or after July 1, 1986, and before July 1, 1987,".

The revision and additions are to read as follows:

§ 413.86 Direct graduate medical education payments.

* * * * *

(b) * * *

Primary care resident is a resident enrolled in an approved medical residency training program in family medicine, general internal medicine, general pediatrics, preventive medicine, geriatric medicine or osteopathic general practice.

* * * * *

(e) * * *

(3) *For cost reporting periods beginning on or after July 1, 1986.* For cost reporting periods beginning on or after July 1, 1986, a hospital's base-period per resident amount is adjusted as follows:

(i) Except as provided in paragraph (e)(3)(ii) of this section, each hospital's per resident amount for the previous cost reporting is adjusted by the projected change in the CPI-U for the 12-month cost reporting period. This adjustment is subject to revision during the settlement of the cost report to reflect actual changes in the CPI-U that occurred during the cost reporting period.

(ii) For cost reporting periods beginning on or after October 1, 1993 through September 30, 1995, each hospital's per resident amount for the previous cost reporting period will not be adjusted for any resident FTEs who are not either a primary care resident or an obstetrics and gynecology resident.

* * * * *

(g) * * *

(1) * * * Effective August 10, 1993, residents or fellows in an approved preventive medicine residency or fellowship program may also be counted

as a full FTE resident for up to two additional years beyond the initial residency period limitations. * * *

* * * * *

(Catalog of Federal Domestic Assistance Program No. 93.773, Medicare—Hospital Insurance; and Program No. 93.774, Medicare—Supplementary Medical Insurance Program)

Dated: August 23, 1993.

Bruce C. Vladeck,

Administrator, Health Care Financing Administration.

Dated: August 24, 1993.

Donna E. Shalala,

Secretary.

[Note: The following addendum and appendixes will not appear in the Code of Federal Regulations.]

Addendum—Schedule of Standardized Amounts Effective With Discharges On or After October 1, 1993 and Update Factors and Rate-of-Increase Percentages Effective With Cost Reporting Periods Beginning On or After October 1, 1993

I. Summary and Background

In this addendum, we are setting forth the amounts and factors for determining prospective payment rates for Medicare inpatient operating costs and Medicare inpatient capital-related costs. We are also setting forth new rate-of-increase percentages for updating the target amounts for hospitals and hospital units excluded from the prospective payment system.

For discharges occurring on or after October 1, 1993, except for sole community hospitals, Medicare-dependent, small rural hospitals, hospitals located in Puerto Rico, and hospitals subject to the regional floor, each hospital's payment per discharge under the prospective payment system is based on 100 percent of the Federal national rate.

Sole community hospitals and Medicare-dependent, small rural hospitals are paid based on whichever of the following rates yields the greatest aggregate payment: the Federal national rate (subject to the regional floor), the updated hospital-specific rate based on FY 1982 cost per discharge, or the updated hospital-specific rate based on FY 1987 cost per discharge. Hospitals in Puerto Rico are paid on the basis of a rate per discharge comprised of 75 percent of a Puerto Rico rate and 25 percent of a national rate (section 1886(d)(9)(A) of the Act). Hospitals affected by the regional floor are paid on the basis of 85 percent of the Federal national rate and 15 percent of the Federal regional rate (section 13501(f) of Public Law 103–66 amended section 1886(d)(1)(a)(iii) of the Act to extend the regional floor through FY 1996).

As discussed below in section II, we are making changes in the determination of the prospective payment rates for Medicare inpatient operating costs. The changes, to be applied prospectively, will affect the calculation of the Federal rates. In section III we discuss changes we are making in the determination of the prospective payment rates for Medicare inpatient capital-related costs. Section IV sets forth our changes for determining the rate-of-increase limits for hospitals excluded from the prospective payment system. The tables to which we refer in the preamble to the final rule are presented at the end of this addendum in section V.

II. Changes to Prospective Payment Rates for Inpatient Operating Costs for FY 1994

The basic methodology for determining prospective payment rates for inpatient operating costs is set forth at § 412.63 for hospitals located outside of Puerto Rico. The basic methodology for determining the prospective payment rates for inpatient operating costs for hospitals located in Puerto Rico is set forth at §§ 412.210 and 412.212. Below, we discuss the manner in which we are changing some of the factors used for determining the prospective payment rates. The Federal and Puerto Rico rate changes will be effective with discharges occurring on or after October 1, 1993. As required by section 1886(d)(4)(C) of the Act, we must adjust the DRG classifications and relative weights for discharges in FY 1994.

In summary, the standardized amounts set forth in Tables 1a, 1b, and 1c of section V of this addendum were—

- Updated by 1.8 percent for urban hospitals and 3.3 percent for rural hospitals (that is, the market basket percentage increase of 4.3 percent minus 2.5 percent for urban areas and the market basket percentage increase of 4.3 percent minus 1.0 percent for rural areas);
- Adjusted to ensure budget neutrality as provided for in sections 1886(d)(4)(C)(iii) and (d)(3)(E) of the Act by applying new budget neutrality adjustment factors to the urban and rural standardized amounts;
- Adjusted to ensure budget neutrality as provided for in section 1886(d)(8)(D) of the Act by removing the FY 1993 budget neutrality factor and applying a revised factor; and
- Adjusted by removing the FY 1993 outlier offsets and applying the revised urban and rural outlier offsets.

A. Calculation of Adjusted Standardized Amounts

1. *Standardization of base-year costs or target amounts.* Section 1886(d)(2)(A) of the Act required the establishment of base-year cost data containing allowable operating costs per discharge of inpatient hospital services for each hospital. The preamble to the September 1, 1983 interim final rule (48 FR 39763) contains a detailed explanation of how base-year cost data were established in the initial development of standardized amounts for the prospective payment system and how they are used in computing the Federal rates.

Section 1886(d)(9)(B)(i) of the Act required that Medicare target amounts be determined for each hospital located in Puerto Rico for its cost reporting period beginning in FY 1987. The September 1, 1987 final rule contains a detailed explanation of how the target amounts were determined and how they are used in computing the Puerto Rico rates (52 FR 33043, 33066).

The standardized amounts are based on per discharge averages of adjusted hospital costs from a base period or, for Puerto Rico, adjusted target amounts from a base period, updated and otherwise adjusted in accordance with the provisions of section 1886(d) of the Act. Sections 1886(d)(2)(C) and (d)(9)(B)(ii) of the Act required that the updated base-year per discharge costs and, for Puerto Rico, the updated target amounts, respectively, be standardized in order to remove from the cost data the effects of certain sources of variation in cost among hospitals. These include case mix, differences in area wage levels, cost of living adjustments for Alaska and Hawaii, indirect medical education costs, and payments to hospitals serving a disproportionate share of low-income patients.

Since the standardized amounts have already been adjusted for differences in case mix, wages, cost-of-living, indirect medical education costs, and payments to hospitals serving a disproportionate share of low-income patients, no additional adjustments for these factors for FY 1994 were made. That is, the standardization adjustments reflected in the FY 1994 standardized amounts are the same as those reflected in the FY 1993 standardized amounts.

Sections 1886(d)(2)(H) and (d)(3)(E) of the Act require that, in making payments under the prospective payment system, the Secretary adjust the proportion of payments that are wage-related (as estimated by the Secretary from time to time). Beginning with October 1, 1990, when the market basket was rebased, we have considered

71.40 percent of costs to be labor-related for purposes of the prospective payment system.

Comment: One commenter asked why the ratio of the labor-related share of the rural standardized amount to the combined labor-related and nonlabor-related shares is higher than the ratio for the other urban and large urban standardized amounts, since the wage index values for rural areas generally are lower.

Response: The difference results from the standardization process. The labor-related payment rate equals the labor-related share of the standardized amount times the wage index. In order to determine the labor-related share of each standardized amount, we first take the applicable cost per case for each hospital, multiply it by the labor-related share of the hospital market basket (currently 71.40 percent), and divide that number by the wage index for the hospital. The individual hospital labor shares are then averaged for all rural hospitals to determine the rural labor-related share. Since, as the commenter points out, hospitals in rural areas tend to have lower wage index values than hospitals in urban areas, the resulting labor share tends to be higher for rural hospitals, if other factors are equal. This is because dividing a given number by a smaller number will yield a larger result than dividing it by a larger number. The process is explained in detail in the September 1, 1983, interim final rule at 48 FR 39765.

2. *Computing urban and rural averages within geographic areas.* Section 1886(d)(3) of the Act requires the Secretary to compute three average standardized amounts for discharges occurring in a fiscal year: One for hospitals located in rural areas; one for hospitals located in large urban areas; and one for hospitals located in other urban areas. In addition, under section 1886(d)(9)(B)(iii) of the Act, the average standardized amount per discharge must be determined for hospitals located in urban and rural areas in Puerto Rico. Hospitals in Puerto Rico are paid a blend of 75 percent of the applicable Puerto Rico standardized amount and 25 percent of a national standardized payment amount.

Section 1886(d)(2)(D) of the Act defines a "large urban area" as an urban area with a population of more than 1,000,000. In addition, section 4009(i) of Public Law 100–203 provides that a New England County Metropolitan Area (NECMA) with a population of more than 970,000 is classified as a large urban area. As required by section 1886(d)(2)(D) of the Act, population size is determined by the Secretary based on the latest population data published by the Bureau of the Census. Urban areas that do not meet the definition of a "large urban area" are referred to as "other urban areas."

Based on 1991 population estimates published by the Bureau of the Census, 55 large urban areas meet the criteria to be defined as large urban areas for FY 1994. (These consist of the 51 areas identified in the proposed rule, and an additional 4 areas identified as a result of OMB's June 30, 1993, revisions to the MSA definitions.) These areas are identified by an asterisk in Table 4a.

Table 1a contains the three national standardized amounts that continue to be applicable to most hospitals. Table 1b sets forth the 27 regional standardized amounts that continue to be applicable for hospitals located in census areas subject to the regional floor. Under section 1886(d)(9)(A)(ii) of the Act, the national standardized payment amount applicable to hospitals in Puerto Rico consists of the discharge-weighted average of the national rural standardized amount, the national large urban standardized amount, and the national other urban standardized amount (as set forth in Table 1a). The national average standardized amount for Puerto Rico is set forth in Table 1c. This table also includes the three standardized amounts that are applicable to most hospitals in Puerto Rico.

3. *Updating the average standardized amounts.* In accordance with section 1886(d)(3)(A) of the Act, we are updating the large urban, other urban, and rural average standardized amounts using the applicable percentage increases specified in section 1886(b)(3)(B)(i) of the Act. Section 1886(b)(3)(B)(i)(IX) of the Act (as amended by section 13501(a) of Public Law 103–66) specifies the following update factors for the standardized amounts for FY 1994:

- The market basket percentage increase of 4.3 percent minus 2.5 percent (that is 1.8 percent) for hospitals located in urban areas.
- The market basket percentage increase of 4.3 percent minus 1.0 percentage points (that is, 3.3 percent) for hospitals located in rural areas.

The percentage change in the market basket reflects the average change in the price of goods and services purchased by hospitals to furnish inpatient care. The most recent forecasted hospital market basket increase for FY 1994 is 4.3 percent.

Although the update factor for FY 1994 is set by law, we were required by section 1886(e)(3)(B) of the Act to report to Congress no later than March 1, 1993 on our initial recommendation of update factors for FY 1994 for both prospective payment hospitals and hospitals excluded from the prospective payment system. For general information purposes, we published the report to Congress as appendix C to the proposed rule. This recommendation was based on an earlier forecast of the hospital market basket increase. Our final recommendation on the update factors (which is required by sections 1886(e)(4)(A) and (e)(5)(A) of the Act), is set forth as appendix D to this final rule.

4. *Other adjustments to the average standardized amounts—a. Recalibration of DRG Weights and Updated Wage Index—Budget Neutrality Adjustment.* Section 1886(d)(4)(C)(iii) of the Act specifies that beginning in FY 1991, the annual DRG reclassifications and recalibration of the relative weights must be made in a manner that assures that aggregate payments to hospitals are not affected. As discussed in section II of the preamble, we normalized the recalibrated DRG weights by an adjustment factor, so that the average case weight after recalibration is equal to the average case weight prior to recalibration. While this adjustment is intended to ensure that recalibration does not affect total payments to hospitals, our analysis indicates that the normalization adjustment does not necessarily achieve budget neutrality with respect to aggregate payments to hospitals.

Section 1886(d)(3)(E) of the Act specifies that the hospital wage index must be updated based on new survey data no later than October 1, 1990 and on an annual basis beginning October 1, 1993. This provision also requires that any updates or adjustments to the wage index must be made in a manner that assures that aggregate payments to hospitals are not affected by the change in the wage index.

To comply with the requirement of section 1886(d)(4)(C)(iii) of the Act that the DRG reclassification and recalibration of the relative weights be budget neutral and the requirement in section 1886(d)(3)(E) of the Act that the updated wage index be implemented in a budget neutral manner, we compared aggregate payments using the FY 1993 relative weights and the wage index effective October 1, 1992 to aggregate payments using the proposed FY 1994 relative weights and wage index. The same methodology was used for the FY 1993 budget neutrality adjustment. (See the discussion in the September 1, 1992 final rule (57 FR 39832).) Based on this comparison, we computed a proposed budget neutrality adjustment factor equal to .997819. The final budget

neutrality adjustment factor is equal to .999003. This budget neutrality adjustment factor is applied to the standardized amounts without removing the effects of the FY 1993 budget neutrality adjustment. We do not remove the prior budget neutrality adjustment because the statute requires that aggregate payments after the changes in the DRG relative weights and wage index equal estimated payments prior to the changes. If we removed the prior year adjustment, we would not be able to satisfy this condition.

In addition, we are continuing to apply the same FY 1994 adjustment factor to the hospital-specific rates that are effective October 1, 1993, in order to ensure that we meet the statutory requirement that aggregate payments neither increase nor decrease as a result of the implementation of the DRG weights and updated wage index. (See the discussion in the September 4, 1990 final rule (55 FR 36073).)

b. *Reclassified hospitals—budget neutrality adjustment.* Section 1886(d)(8)(B) of the Act provides that certain rural hospitals are deemed urban. In addition, section 1886(d)(10) of the Act provides for the reclassification of hospitals based on determinations by the Medicare Geographic Classification Review Board (MGCRB). Under section 1886(d)(10) of the Act, a hospital may be reclassified for purposes of the standardized amount or the wage index, or both.

Section 1886(d)(8)(D) of the Act specifies two budget neutrality objectives that must be met. First, the FY 1994 urban standardized amounts are to be adjusted so as to assure that total aggregate payments under the prospective payment system after implementation of the provisions of sections 1886(d)(8)(B) and (C) and 1886(d)(10) of the Act are equal to the aggregate prospective payments that would have been made absent these provisions. Second, the rural standardized amounts are to be adjusted to assure that aggregate payments to rural hospitals not affected by these provisions neither increase nor decrease as a result of implementation of these provisions. We note that some rural referral centers have been reclassified for purposes of the standardized amount. The budget neutrality adjustment for geographic reclassifications does not include the cost of paying the other urban standardized amount to rural referral centers or hospitals that lost their rural referral center status as a result of reclassification, since they are already paid on this basis in the absence of reclassification. Rather, the budget neutrality adjustment includes only the difference between the payments to these hospitals after reclassification and payments as a rural referral center before reclassification (for example, higher disproportionate share payments or the difference between large urban and other urban rates, as applicable). The following adjustment factors, necessary to achieve the requisite budget neutrality constraints, were applied to the proposed standardized amounts:

Urban	Rural
.993665	.998805

The following adjustment factors were applied to the final standardized amounts:

Urban	Rural
.992529	.999472

The adjustment factors are applied to the standardized amounts after removing the effects of the FY 1993 budget neutrality adjustment factors. We note that the proposed FY 1994 adjustments reflect wage index and standardized amount reclassifications approved by the MGCRB or the Administrator as of March 15, 1993. The final budget neutrality adjustment factors reflect the effects of all reclassification decisions and changes in these decisions resulting from appeals and review of the MGCRB's decisions for FY 1994, or from a hospital's request for the withdrawal of a reclassification.

c. *Retroactive budget neutrality adjustment to reflect FY 1993 midyear wage index corrections.* In the September 4, 1990 final rule (55 FR 36042), we set forth under § 412.63(l) (redesignated at § 412.63(p)) our policy for making midyear corrections in the wage index and applying those corrections on a prospective basis effective with discharges occurring on or after the date the corrections are made. As described in that rule, when midyear corrections are made under the provisions of § 412.63(l), the correction in the wage index value for the affected area is effective prospectively from the date the revision is made; however, both the corresponding prospective adjustment to the wage index values for all other wage areas (to reflect the effect of the corrected data on the national average hourly wage), and the budget neutrality adjustment to the standardized amounts required by section 1886(d)(3)(E) of the Act (to account for the effect on payments of the midyear corrections), are not made until the beginning of the next fiscal year. We note that midyear wage index corrections will not be recognized in FY 1994.

To account for the effect that midyear corrections in the wage index for FY 1993 had on program payments for that year, we have computed a retroactive budget neutrality adjustment factor of .998188. This adjustment was computed by comparing FY 1993 aggregate payments before the wage data corrections were made with aggregate payments after the revised wage index values were implemented. This adjustment has been applied to the FY 1994 standardized amounts after removing the effects of the FY 1993 budget neutrality adjustment for midyear wage corrections made in FY 1992.

d. *Outliers.* Section 1886(d)(5)(A) of the Act provides that, in addition to the basic prospective payment rates, payments must be made for discharges involving day outliers and may be made for cost outliers. Section 1886(d)(3)(B) of the Act requires that the urban and rural standardized amounts be separately reduced by the proportion of estimated total DRG payments attributable to estimated outlier payments for hospitals located in urban areas and those located in rural areas. Section 1886(d)(9)(B)(iv) of the Act requires that the urban and rural standardized amounts applicable to hospitals in Puerto Rico be reduced by the proportion of estimated total DRG payments attributable to estimated outlier payments.

Consequently, instead of a uniform reduction factor applying equally to all the standardized amounts, there are two separate reduction factors, one applicable to the urban standardized amounts and the other applicable to the rural standardized amounts. Furthermore, section 1886(d)(5)(A)(iv) of the Act directs that outlier payments in any year may not be less than 5 percent nor more than 6 percent of total payments projected to be made based on the prospective payment rates.

i. *Factors affecting outlier thresholds.* In the September 1, 1992 final rule (at 57 FR 39783), we discussed several factors that could have been responsible for FY 1991 outlier payments being lower than expected. We also indicated that we would continue to explore possible refinements to the outlier estimation methodology that would help ensure that actual outlier payments are as close as possible to estimated outlier payments (as a fraction of total DRG payments).

We examined the various adjustment factors that are used to estimate cost

outlier payments. These include adjustments for the indirect costs of medical education (IME) and for hospitals serving a disproportionate share of low income patients (DSH), the hospital cost-to-charge ratios, and the charge inflation factor. We decided not to make any adjustments to the IME and DSH adjustments currently used to estimate outlier payments because they do not change in any predictable fashion. As a result, there is no accurate adjustment that we can make to these adjustment factors that would improve our estimation methodology. However, we have noted a continued trend with respect to changes in costs relative to charges. Over time, charges have continued to increase at a faster rate than costs, so that cost-to-charge ratios have been declining. Because we use the latest available cost-to-charge ratios (which may be as much as 2 years old) to convert billed charges to costs for purposes of estimating cost outlier payments, we may be overestimating outlier payments in setting the thresholds. As a result, actual payments may be lower than estimated. In order to alleviate this problem, we are using a cost inflation factor rather than a charge inflation factor to estimate FY 1994 costs. In other words, instead of inflating the FY 1992 charge data by a charge inflation factor for 2 years in order to estimate FY 1994 charge data and then applying the cost-to-charge ratio, we will adjust the charges by the cost-to-charge ratio and then inflate the estimated costs for 2 years of cost inflation. In this manner, we will be automatically adjusting for any changes in the cost-to-charge ratios that may occur, since the relevant variable is the costs estimated for a given case.

In setting the FY 1994 outlier thresholds, we used a cost inflation factor of 8.3 percent. This is the average increase in cost per case between PPS–5 (data from cost reporting periods beginning in FY 1988) and PPS–8 (data from cost reporting periods beginning in FY 1991), for a matched set of hospitals. We made an audit adjustment for any cost report that had not been settled, based on the average ratio between submitted and final cost report data. This adjustment was made separately for Medicare inpatient capital costs and Medicare inpatient operating costs. We used the actual settlement ratio for PPS–5 cost report data, since most cost reports for that period had been settled, but used the settlement ratio from PPS–6 (data from cost reporting periods beginning in FY 1989) for the PPS–7 and PPS–8 cost reports, since the PPS–7 and PPS–8 settlement ratios currently available are based on many fewer hospitals (approximately 55 percent for PPS–7 and 6 percent for PPS–8, as opposed to 92 percent for PPS–6).

ii. *FY 1992 and FY 1993 outlier payments.* In the June 4, 1992 proposed rule (57 FR 23645), we discussed several reasons for a difference between actual and estimated outlier payments as a percentage of total DRG payments for FY 1992. At that time, we estimated that actual FY 1992 outlier payments would be approximately 3.6 percent of FY 1992 total DRG payments. We also estimated that total DRG payments for FY 1992 would be higher than estimated at the time that we set the FY 1992 outlier thresholds. Thus, we stated our belief that hospitals were not necessarily disadvantaged by the lower than estimated outlier payment percentage. Our current estimate is that actual FY 1992 outlier payments will be approximately 3.6 percent of total DRG payments. At the same time, we estimate that FY 1992 total DRG payments per case were 2.4 percent higher than we estimated when we set the FY 1992 outlier thresholds. This estimate is based on the June 30, 1992, update of the provider-specific file and the June 30, 1993, update of the MedPAR file.

We believe that using a cost inflation factor in setting the FY 1994 outlier thresholds, rather than a charge inflation factor, will further improve our estimation methodology in order that actual outlier payments as a percentage of total DRG payments will equal estimated outlier payments as a percentage of total DRG payments.

In the September 1, 1992 final rule, we set the outlier thresholds so that estimated operating outlier payments were equal to 5.1 percent of estimated total estimated operating prospective payments. We currently estimate that FY 1993 outlier payments will be 4.5 percent of total DRG payments.

Although we now estimate that FY 1993 outlier payments will be lower than anticipated, we note that FY 1993 total DRG payments per case will be approximately 1.0 percent higher than we estimated when setting the FY 1993 outlier thresholds. In addition, we note that the estimate of the market basket rate of increase used to set the FY 1993 rates was 4.1 percentage points, while our current estimate for the FY 1993 market basket rate of increase is 3.2 percent. Thus, the net effect is that hospitals are receiving higher FY 1993 payments than would have been established based on the more recent data.

Comment. Some commenters are concerned about our projection that FY 1993 payments will be lower than we estimated when we set the FY 1993 outlier thresholds. These commenters urge that we establish a method of monitoring outlier payments during a fiscal year, so that we can prospectively change the outlier thresholds in the event that projected outlier payments are not between 5 and 6 percent of total DRG payments. These commenters support our efforts to establish a cost inflation factor and to refine the estimation process.

Response: We responded to similar comments in the final rule for FY 1993 (57 FR 39784). Section 1886(d)(5)(A)(iv) of the Act requires that outlier payments be between 5 and 6 percent of the total payments "projected or estimated to be made" based on diagnosis-related group (DRG) prospective payment rates for discharges in that year. We set the FY 1993 outlier thresholds so that estimated outlier payments were the appropriate fraction of estimated total DRG payments. We used the most recent Medicare discharge and hospital-specific data available to estimate total payments and the percentage of payments for outliers. This is necessarily a prospective process and the resulting estimate may prove to be inaccurate.

We currently estimate that FY 1993 outlier payments may not be equal to the 5.1 percent level that we originally estimated when setting the FY 1993 outlier thresholds. However, we do not believe that Congress envisioned we would revise, in midyear, any of the estimates of the factors used to set prospective payment amounts for a given Federal fiscal year. These factors include not only the outlier thresholds, but the market basket rate of increase used to establish the update factors, the recalibration of the DRG rates, and the various required budget neutrality provisions. The market basket rate of increase has been overestimated for the past three fiscal years, but we have not made adjustments to the standardized amounts during the year as new estimates of the market basket rate of increase became available. Further, our most recent estimate of the FY 1993 market basket rate of increase is 3.2 percent, or 0.9 percentage points lower than that used to establish the FY 1993 standardized amounts. In addition, although we now have evidence that we underestimated the recalibration budget neutrality factor applied to the standardized amounts, we have not contemplated changing that factor. We do not believe it would be appropriate to make these midyear corrections to the standardized amounts, given the requirements under sections 1886(d)(6)

and 1886(e)(5)(B) of the Act that we publish annual prospective payment system rates by September 1 of each year. This provision ensures that hospitals have advance notice of the rates that will be in effect for the upcoming fiscal year. While our current estimate of FY 1993 outlier payments is lower than our estimate in the FY 1993 final prospective payment system rule, our estimate for standard payments (DRG payments plus outlier payments) is higher as is our estimate for total prospective payments. Any midyear correction to the standardized amounts and adjustment factors would have to remove any anticipated payments in excess of our total payment target in order to maintain budget neutrality.

Comment: Several commenters believe that section 1886(d)(5)(A)(iv) of the Act requires that actual outlier payments for any fiscal year be between 5 and 6 percent of total DRG payments as estimated to be made in that fiscal year. Other commenters believe that we should retroactively pay out any difference between actual and estimated outlier payments.

Response: Again, section 1886(d)(5)(A)(iv) of the Act requires that outlier payments in each fiscal year be between 5 and 6 percent of the total payments "projected or estimated to be made" based on DRG prospective payment rates for discharges in that year. The statute requires that we set outlier payment policy based on estimates, and we make every effort to ensure that our estimates are as accurate as possible. We have always set the outlier thresholds based on the most current data available at the time, and we continue to refine the estimation methodology.

For several years, commenters have suggested that HCFA has failed to pay out funds set aside for outlier cases in a given fiscal year. This issue was discussed most recently in the August 30, 1991, final rule (56 FR 43227), and previously in the September 3, 1986, final rule (51 FR 31525), the September 1, 1987, final rule (52 FR 33048), the September 30, 1988, final rule (53 FR 38508), the September 1, 1989, final rule (54 FR 36500), and the September 4, 1990, final rule (55 FR 36077). As indicated in our previous responses, there are no funds explicitly set aside for outlier cases. If actual outlier payments are less than estimated outlier payments, this does not mean that the Medicare program retains the difference. In fact, in some years, actual total payments (including outlier payments) have been greater than estimated payments. Also, we do not make adjustments if we pay more in outlier payments than we estimated at the time we set the outlier thresholds.

iii. *FY 1994 outlier thresholds.* For FY 1993, the day outlier threshold is the geometric mean length of stay for each DRG plus the lesser of 23 days or 3.0 standard deviations. The cost outlier threshold is the greater of 2.0 times the prospective payment rate for the DRG or $35,500 ($32,500 for hospitals that have not yet entered the prospective payment system for inpatient capital-related costs). The outlier adjustments for FY 1993 standardized amounts were .944598 for the urban rates, .978420 for the rural rates, and .9496 for the capital Federal rate.

For FY 1994, we proposed to set the day outlier threshold at the geometric mean length of stay for each DRG plus the lesser of 23 days or 3.0 standard deviations and the cost outlier threshold at the greater of 2.0 times the prospective payment rate for the DRG or $36,000 ($33,000 for hospitals that have not yet entered the prospective payment system for capital-related costs). The thresholds that we are establishing in this final rule are: for day outliers, the geometric mean length of stay for each DRG plus the lesser of 23 days or 3.0 standard deviations, and for cost outliers, the greater of 2.0 times the prospective payment rate for the DRG or $36,000 ($33,000 for hospitals that have not yet entered the prospective payment system for capital-related costs).

The FY 1994 outlier thresholds will result in a slight increase in the proportion of outliers paid as cost outliers relative to those paid as day outliers. We estimate that 46.9 percent of outlier cases will be paid using the cost outlier methodology and 53.1 percent will be paid using the day outlier methodology. Cases that meet the day outlier threshold but that are paid using the cost outlier methodology, because it yields the higher payment, will represent 17.3 percent of all outlier cases. Our simulation of FY 1994 outlier payments based on FY 1992 MedPAR data indicates that the percentage of outlier cases that will qualify as day outliers is about 70.4 percent. The cases qualifying as day outliers will receive 74.2 percent of operating outlier payments in FY 1994. An estimated 29.6 percent of outlier cases will be cost-only outlier cases, which will receive about 25.8 percent of operating outlier payments. The following table illustrates this finding in greater detail:

Type of outlier	Percentage of outlier cases	Percentage of operating outlier payments	Percentage of capital outlier payments	Percentage of total outlier payments
Meets day threshold only	44.4	18.6	17.0	18.4
Meets day and cost thresholds, paid using day methodology	8.6	13.1	11.9	12.9
Meets day and cost thresholds, paid using cost methodology	17.3	42.5	42.3	42.5
Subtotal—All cases meeting day threshold	70.4	74.2	71.1	73.9
Meets cost threshold only	29.6	25.8	28.9	26.1
Total	100.0	100.0	100.0	100.0

When we modeled the combined operating and capital outlier payments, we found that using a common set of thresholds resulted in a slightly higher percentage of outlier payments for capital-related costs than for operating costs. We estimate the final thresholds for FY 1994 will result in outlier payments equal to 5.1 percent of operating DRG payments and 5.5 percent of capital payments based on the Federal rate.

We proposed to establish outlier thresholds that would be applicable to both inpatient operating costs and inpatient capital-related costs. The proposed outlier adjustment factors applied to the standardized amounts and the capital Federal rate for FY 1994 were as follows:

Urban standardized amount	Rural standardized amount	Capital Federal rate
.945752	.977589	.9455

We proposed to apply the outlier adjustment factors after removing the effects of the FY 1993 outlier adjustment factors on the standardized amounts and the capital Federal rate.

The final outlier adjustment factors applied to the standardized amounts and the capital Federal rate for FY 1994 are as follows:

Urban standardized amount	Rural standardized amount	Capital Federal rate
.945960	.977157	.9454

As proposed, we will continue to set the outlier thresholds so that estimated outlier payments equal 5.1 percent of estimated total operating prospective payments. The model that we use to determine the outlier thresholds necessary to target our desired outlier-payment percentage for FY 1994 uses the FY 1992 MedPAR file and the most recent available information on hospital-specific payment parameters (such as the cost-to-charge ratios). This information is based on the June, 1993 update of the provider-specific file used in the PRICER program.

iv. *Other changes concerning outliers.* Because of the change to the calculation of day outlier payments beginning in FY 1993, we are now including the arithmetic mean length of stay in Table 5 of section V of this addendum. When we recalibrate DRG weights, we set a threshold of 10 cases as the minimum number of cases required to compute a reasonable weight and geometric mean length of stay. DRGs that do not have at least 10 cases are considered to be low volume DRGs. For the low volume DRGs, we use the original geometric mean lengths of stay, because no arithmetic mean length of stay was calculated based on the original data.

Table 8a in section V of this addendum contains the updated Statewide average operating cost-to-charge ratios for urban hospitals and for rural hospitals to be used in calculating cost outlier payments for those hospitals for which the intermediary is unable to compute a reasonable hospital-specific cost-to-charge ratio. Effective October 1, 1993, these Statewide average ratios replace the ratios published in the September 1, 1992 final rule (57 FR 39944). Table 8b contains comparable Statewide average capital cost-to-charge ratios. These average ratios will be used to calculate cost outlier payments for those hospitals for which the intermediary computes operating cost-to-charge ratios lower than 0.295580 or greater than 1.287780 and capital cost-to-charge ratios lower than 0.012983 or greater than 0.247433. This range represents 3.0 standard deviations (plus or minus) from the mean of the log distribution of cost-to-charge ratios for all hospitals. The cost-to-charge ratios in Tables 8a and 8b will be applied to all hospital-specific cost-to-charge ratios based on cost report settlements occurring during FY 1994.

B. Adjustments for Area Wage Levels and Cost of Living

This section contains an explanation of the application of two types of adjustments to the adjusted standardized amounts that will be made by the intermediaries in determining the prospective payment rates as described in this addendum. For discussion purposes, it is necessary to present the adjusted standardized amounts divided into labor and nonlabor portions. Tables 1a, 1b, and 1c, as set forth in this addendum, contain the actual labor-related and nonlabor-related shares that will be used to calculate the prospective payment rates for hospitals located in the 50 States, the District of Columbia, and Puerto Rico.

1. *Adjustment for area wage levels.* Sections 1886(d)(3)(E) and 1886(d)(9)(C)(iv) of the Act require that an adjustment be made to the labor-related portion of the prospective payment rates to account for area differences in hospital wage levels. This adjustment is made by the intermediaries by multiplying the labor-related portion of the adjusted standardized amounts by the appropriate wage index for the area in which the hospital is located. In section III of the preamble, we discuss certain revisions we are making to the wage index. This index is set forth in Tables 4a through 4e of this addendum.

2. *Adjustment for cost of living in Alaska and Hawaii.* Section 1886(d)(5)(H) of the Act authorizes an adjustment to take into account the unique circumstances of hospitals in Alaska and Hawaii. Higher labor-related costs for these two States are taken into account in the adjustment for area wages described above. For FY 1994, the adjustment necessary for nonlabor-related costs for hospitals in Alaska and Hawaii will be made by the intermediaries by multiplying the nonlabor portion of the standardized amounts by the appropriate adjustment factor contained in the table below. The Office of Personnel Management published revised cost-of-living adjustment factors on June 18, 1993 at 58 FR 33506, and these adjustment factors are reflected in the table below.

TABLE OF COST-OF-LIVING ADJUSTMENT FACTORS, ALASKA AND HAWAII HOSPITALS

Alaska—All areas	1.25
Hawaii:	
County of Honolulu	1.225
County of Hawaii	1.15
County of Kauai	1.175
County of Maui	1.225
County of Kalawao	1.225

(The above factors are based on data obtained from the U.S. Office of Personnel Management.)

C. DRG Relative Weights

As discussed in section II of the preamble, we have developed a DRG classification system for hospital inpatient discharges, and have developed relative weights for each DRG that reflect the resource utilization of cases in that DRG relative to Medicare cases in other DRGs. The intermediary calculates the prospective payment amount by multiplying the applicable standardized amount by the relative weight for the DRG to which the discharge is assigned.

Table 5 of section V of this addendum contains the relative weights that we will use for discharges occurring in FY 1994. These factors have been recalibrated as explained in section II of the preamble.

D. Calculation of Prospective Payment Rates for FY 1994

General Formula for Calculation of Prospective Payment Rates for FY 1994:

Prospective payment rate for all hospitals located outside Puerto Rico except sole community hospitals and Medicare-dependent, small rural hospitals = Federal rate.

Prospective payment rate for sole community hospitals = Whichever of the following rates yields the greatest aggregate payment: 100 percent of the Federal rate, 100 percent of the FY 1982 hospital-specific rate, or 100 percent of the FY 1987 hospital-specific rate.

Prospective payment rate for Medicare-dependent, small rural hospitals = 100 percent of the Federal rate plus, if the greater of the FY 1982 hospital-specific rate and the FY 1987 hospital-specific rate is higher than the Federal rate, an adjustment depending on the hospital's cost reporting period as follows:

- For discharges occurring during the first 3 12-month cost reporting periods that began on or after April 1, 1990, the amount by which the greater hospital-specific rate exceeds the Federal rate; and
- For discharges occurring during any subsequent cost reporting period, 50

percent of the difference between the greater hospital-specific rate and the Federal rate.

Prospective payment rate for Puerto Rico = 75 percent of the Puerto Rico rate + 25 percent of a discharge-weighted average of the large urban, other urban, and rural national rates.

1. *Federal rate.* For discharges occurring on or after October 1, 1993 and before October 1, 1994, except for sole community hospitals, Medicare-dependent, small rural hospitals, hospitals subject to the regional floor, and hospitals in Puerto Rico, the hospital's rate is comprised exclusively of the Federal national rate. Hospitals located in counties that were reclassified from urban to rural due to redesignation of MSAs by the Office of Management and Budget shall have their rural average standardized amount adjusted on the basis of an additional amount that equals two-thirds of the difference between the urban and rural standardized amounts. Section 1886(d)(1)(A)(iii) of the Act, as amended by section 13501(f) of Public Law 103–66, provides that the Federal rate is comprised of 100 percent of the Federal national rate except for those hospitals located in census regions that have a regional rate that is higher than the national rate. The Federal rate for hospitals located in census regions that have a regional rate that is higher than the national rate equals 85 percent of the Federal national rate plus 15 percent of the Federal regional rate. For discharges occurring on or after October 1, 1993, rural hospitals in regions I, II, III, and IV and urban hospitals in regions I, IV, and VI are affected by the regional floor.

The Federal rates are determined as follows:

Step 1—Select the appropriate regional or national adjusted standardized amount considering the type of hospital and designation of the hospital as large urban, other urban, or rural (see Tables 1a and 1b, section V of this addendum).

Step 2—Multiply the labor-related portion of the standardized amount by the applicable wage index for the geographic area in which the hospital is located (see Tables 4a, 4b, and 4c, section V of this addendum).

Step 3—For hospitals in Alaska and Hawaii, multiply the nonlabor-related portion of the standardized amount by the appropriate cost-of-living adjustment factor.

Step 4—Add the amount from Step 2 and the nonlabor-related portion of the standardized amount (adjusted if appropriate under Step 3).

Step 5—Multiply the final amount from Step 4 by the relative weight corresponding to the appropriate DRG (see Table 5, section V of this addendum).

2. *Hospital-specific rate (applicable only to sole community hospitals and medicare-dependent, small rural hospitals).* Sections 1886(d)(5)(D)(i) and (b)(3)(C) of the Act provide that sole community hospitals are paid based on whichever of the following rates yields the greatest aggregate payment: The Federal rate, the updated hospital-specific rate based on FY 1982 cost per discharge, or the updated hospital-specific rate based on FY 1987 cost per discharge.

Section 1886(d)(5)(G) of the Act, as amended by section 13501(e) of Public Law 103–66, specifies that payments to Medicare-dependent, small rural hospitals are calculated as follows:

Prospective payment rate for Medicare-dependent, small rural hospitals = 100 percent of the Federal rate plus, if the greater of the FY 1982 hospital-specific rate and the FY 1987 hospital specific rate is greater than the Federal rate, an adjustment depending on the hospital's cost reporting period as follows:

- For discharges occurring during the first 3 12-month cost reporting periods that began on or after April 1, 1990, the amount by which the greater hospital-specific rate exceeds the Federal rate; and
- For discharges occurring during any subsequent cost reporting period, 50 percent of the difference between the greater hospital-specific rate and the Federal rate.

Hospital-specific rates have been determined for each of these hospitals based on both the FY 1982 cost per discharge and the FY 1987 cost per discharge. For a more detailed discussion of the calculation of the FY 1982 hospital-specific rate and the FY 1987 hospital-specific rate, we refer the reader to the September 1, 1983 interim final rule (48 FR 39772); the April 20, 1990 final rule with comment (55 FR 15150); and the September 4, 1990 final rule (55 FR 35994).

a. *Updating the FY 1982 and FY 1987 hospital-specific rates for FY 1994 cost reporting periods.* For discharges occurring on or after October 1, 1993, we are increasing the hospital-specific rates by 2.0 percent (the hospital market basket percentage increase minus 2.3 percentage points) for sole community hospitals located in all areas and Medicare-dependent, small rural hospitals. Section 1886(b)(3)(C)(ii) of the Act, as amended by section 13501(a)(2) of Public Law 103–66, provides that the update factor applicable to the hospital-specific rates for sole community hospitals equals the update factor under section 1886(b)(3)(B)(iv) of the Act, which was added by section 13501(a)(2) of Public Law 103–66. For discharges occurring during FY 1994, the update factor is the market basket rate of increase minus 2.3 percentage points, taking into account any porion of the 12-month cost reporting period beginning during FY 1993 that occurred during FY 1994. In order to implement this provision, we are deeming the FY 1993 updates to be those necessary to update the hospital-specific rate to October, 1, 1993 as described in section IV of the preamble to this final rule.

b. *Calculation of hospital-specific rate.* For discharges occurring on or after October 1, 1993 and before October 1, 1994, the applicable hospital-specific rate will be calculated by multiplying a hospital's deemed hospital-specific rate for the preceding cost reporting period by the applicable update factor (that is, 1.020). In addition, the hospital-specific rate will be adjusted by the budget neutrality adjustment factor (that is, .999003) as discussed in section II.A.4.b. of this addendum. This resulting rate will be used in determining which rate applies to a sole community hospital or Medicare-dependent, small rural hospital for discharges occurring on or after October 1, 1993, based on the formula set forth above.

3. *General formula for calculation of prospective payment rates for hospitals located in Puerto Rico beginning on or after October 1, 1993 and before October 1, 1994*—a. *Puerto Rico rate.*

The Puerto Rico prospective payment rate is determined as follows:

Step 1—Select the appropriate adjusted average standardized amount considering the large urban, other urban, or rural designation of the hospital (see Table 1c, section V of the addendum).

Step 2—Multiply the labor-related portion of the standardized amount by the appropriate wage index (see Tables 4a and 4b, section V of the addendum).

Step 3—Add the amount from Step 2 and the nonlabor-related portion of the standardized amount.

Step 4—Multiply the result in Step 3 by 75 percent.

Step 5—Multiply the amount from Step 4 by the appropriate DRG relative weight (see Table 5, section V of the addendum).

b. *National rate.* The national prospective payment rate is determined as follows:

Step 1—Multiply the labor-related portion of the national average standardized amount (see Table 1c,

section V of the addendum) by the appropriate wage index.

Step 2—Add the amount from Step 1 and the nonlabor-related portion of the national average standardized amount.

Step 3—Multiply the result in Step 2 by 25 percent.

Step 4—Multiply the amount from Step 3 by the appropriate DRG relative weight (see Table 5, section V of the addendum).

The sum of the Puerto Rico rate and the national rate computed above equals the prospective payment for a given discharge for a hospital located in Puerto Rico.

III. Changes to Payment Rates for Inpatient Capital-Related Costs for FY 1994

The prospective payment system for hospital inpatient capital-related costs was implemented for cost reporting periods beginning on or after October 1, 1991 During a 10-year transition period extending through FY 2001, hospital inpatient capital-related costs are paid on the basis of an increasing proportion of the capital prospective payment system Federal rate and a decreasing proportion of the historical costs for capital.

The basic methodology for determining Federal capital prospective rates is set forth at §§ 412.308 through 412.352 of the regulations. Below we discuss the factors that we used to determine the Federal rate and the hospital-specific rate for FY 1994. The rates will be effective for discharges occurring on or after October 1, 1993

We computed the FY 1992 standard Federal payment rate for capital-related costs under the prospective payment system by updating the FY 1989 Medicare inpatient capital cost per case by an actuarial estimate of the increase in Medicare inpatient capital costs per case. Each year after FY 1992 we updated the standard Federal rate for increases in capital-related costs as provided in § 412.308(c)(1). Also, § 412.308(c)(2) provides that the Federal rate is adjusted annually by a factor equal to the estimated additional payments under the Federal rate for outlier cases, determined as a proportion of total capital payments under the Federal rate. For FY 1992 through FY 2001, § 412.308(c)(3) requires that the Federal rate be reduced by an adjustment factor equal to the estimated additional payments made for exceptions under § 412.348, and § 412.308(c)(4)(ii) requires that the Federal rate be adjusted so that the annual DRG reclassification and the recalibration of DRG weights and changes in the geographic adjustment factor are budget neutral. For FY 1992 through FY 1995, § 412.352 requires that the Federal rate also be adjusted by a budget neutrality factor, so that estimated aggregate payments for inpatient hospital capital costs will equal 90 percent of the estimated payments that would have been made for capital-related costs on a reasonable cost basis during the fiscal year. In addition, Public Law 103–66 requires that, effective for discharges occurring after September 30, 1993, the unadjusted standard Federal rate be reduced by 7.4 percent.

The hospital-specific rate for each hospital was calculated by dividing the hospital's Medicare inpatient capital-related costs for a specified base year by its Medicare discharges (adjusted for transfers), and dividing the result by the hospital's case mix index (also adjusted for transfers). The resulting case-mix adjusted average cost per discharge was then updated to FY 1992 based on the national average increase in Medicare's inpatient capital cost per discharge and adjusted by the exceptions payment adjustment factor and the budget neutrality adjustment factor to yield the FY 1992 hospital-specific rate. The hospital-specific rate is updated each year after FY 1992 for inflation and for changes in the exceptions payment adjustment factor and the budget neutrality adjustment factor.

To determine the appropriate budget neutrality adjustment factors and the exceptions payment adjustment factor, we developed a dynamic model of Medicare inpatient capital-related costs, that is, a model that projects changes in Medicare inpatient capital-related costs over time. The model and its application are described more fully in appendix B.

In accordance with section 1886(d)(9)(A) of the Act, under the prospective payment system for inpatient operating costs, hospitals located in Puerto Rico are paid under a special payment formula. These hospitals are paid a blended rate that takes into account their geographical designation and is comprised of 75 percent of the applicable standardized amount specific to Puerto Rico hospitals and 25 percent of the applicable national average standardized amount. Section 412.374 provides for the use of this blended payment system for payments to Puerto Rico hospitals under the prospective payment system for inpatient capital-related costs. Accordingly, for capital-related costs we compute a separate payment rate specific to Puerto Rico hospitals using the same methodology used to compute the national Federal rate for capital. Hospitals in Puerto Rico are paid based on 75 percent of the Puerto Rico rate and 25 percent of the Federal rate.

A. Determination of Federal Inpatient Capital-Related Prospective Payment Rate Update

For FY 1993, the Federal rate was $417.29. In the proposed rule, we stated that the proposed FY 1994 Federal rate was $394.88. In this final rule, we are establishing an FY 1994 Federal rate of $378.34.

In the discussion that follows, we explain the factors that were used to determine the proposed FY 1994 Federal rate. In particular, we explain why the FY 1994 Federal rate has decreased 9.33 percent compared to the FY 1993 Federal rate, and 4.19 percent compared to the proposed FY 1994 Federal rate. We also explain that aggregate payments under the capital proposal increase by 2.99 percent.

The major factor contributing to the decrease in the Federal rate is the 7.4 percent reduction to the unadjusted standard Federal rate required under section 13501(a)(3) of Public Law 103–66. We explain this reduction and its effect on the FY 1994 Federal rate in section III.A.1 below.

Another factor contributing to the decrease in the FY 1994 rate in comparison to FY 1993 is the requirement at 42 CFR 412.352 that estimated payments each year from FY 1992 through FY 1995 for capital costs equal 90 percent of what would have been payable that year on a reasonable cost basis. Based on the most recent data, we now estimate that capital payments for FY 1992 equal 98.56 percent of reasonable costs, and that capital payments for FY 1993 equal 95.64 percent of reasonable costs. The data thus indicate that the budget neutrality adjustments for FY 1992 and FY 1993 were not sufficient to meet the 90 percent target and that, as a consequence, the Federal rates for both FY 1992 and FY 1993 were higher than they should have been. While we do not retroactively adjust the budget neutrality factor and the Federal rate for previous years to account for revised estimates, we do employ the most recent information available to refine the budget neutrality adjustment for subsequent years. The result is a lower budget neutrality adjustment factor for FY 1994 to FY 1993 (partially offset by the effect of the reduction to the standard Federal rate, as discussed in sections III.A.1 and III.A.5 below), which contributes to the decrease in the Federal rate.

The decrease in the Federal rate for FY 1994 also can be attributed in part

to an anticipated increase in exceptions payments. Section 412.308(c)(3) requires that the standard Federal rate for inpatient capital-related costs be reduced by an adjustment factor equal to the estimated additional payments for exceptions under § 412.348 determined as a proportion of total payments under the hospital-specific rate and the Federal rate. We estimate that there will be a six-fold increase in exceptions payments in FY 1994 compared to FY 1993. (Because we now estimate that total capital payments exceeded the budget neutrality target by 5.64 percentage points (which equals a 6.27 percent reduction) in FY 1993, we now estimate that exceptions for FY 1993 will be 70 percent lower than we estimated in the FY 1993 final rule.) We expect exceptions payments to increase during the transition period as payments are based increasingly on the Federal rate. The anticipated increase for FY 1994 is fully consistent with that expectation.

Although the Federal rate for FY 1994 is 9.33 percent lower than the FY 1993 Federal rate, we estimate that total capital payments per case will increase 2.99 percent in FY 1994. The increase in total payments per case is due to the increase in the budget neutrality target to equal 90 percent of estimated FY 1994 capital costs per case. Since section 1886(g)(1)(A) of the Act requires that estimated payments equal 90 percent of estimated reasonable costs for capital-related expenses, payments under the capital prospective payment system can be expected to increase as capital costs per case increase. The increase in payments per case from FY 1993 to FY 1994 (2.99 percent) is less than the total estimated increase in capital costs per case between FY 1993 and FY 1994 (9.45 percent) because estimated FY 1993 payments were 6.27 percent higher than the FY 1993 budget neutrality target. As a result, payments must increase less than the full increase in costs to prevent estimated payments for FY 1994 from exceeding 90 percent of reasonable cost. Specifically, the increase in payments from FY 1993 to FY 1994 is determined by dividing the increase in cost per case by the excess of FY 1993 payments over the budget neutrality target (that is, 1.0945/1.0627 = 1.0299). We discuss the determination of the budget neutrality target in section III.A.3 below.

Finally, it should be noted that total payments to hospitals under the prospective payment system for capital-related costs will be relatively insensitive to changes in the Federal rate even after the expiration of the budget neutrality provision in FY 1996. Since capital payments constitute about 10 percent of hospital payments, a 1 percent change in the Federal rate yields only about a 0.1 percent change in actual payments to hospitals.

1. *Public Law 103-66 reduction to the standard Federal rate.* Section 13501(a)(3) of Public Law 103-66 requires that, for discharges occurring after September 30, 1993, the unadjusted standard Federal rate be reduced by 7.4 percent. As we discuss in section V.D of the preamble to this final rule with comment period, the purpose of the reduction is to correct for inflation forecast errors that accrued up to the time of the proposed rule for FY 1994.

The regulation changes required to implement this statutory requirement are discussed in section V.D of the preamble. Here we discuss the effects of the required reduction on the computation of the FY 1994 Federal capital rate.

Under § 412.708(b), HCFA determines the standard Federal rate by adjusting the FY 1992 updated national average cost per discharge by a factor so that estimated payments based on the standard Federal rate adjusted by the payment adjustments described in § 412.312(b) equal estimated aggregate payments based solely on the national average cost per discharge. Section 412.308(c) provides further that the standard Federal rate is updated for inflation each Federal fiscal year and adjusted each year by an outlier payment adjustment factor, an exceptions payment adjustment factor, and two budget neutrality factors to determine the Federal capital payment rate for that year. Thus, the standard Federal rate is to be distinguished from the annual Federal rate actually used in making payment under the capital prospective payment system. The standard Federal rate is, in effect, the underlying or base rate used to determine the annual Federal rate by means of the formula in § 412.308(c). The annual Federal capital rate is the result of that determination process in section 412.308(c).

Because the 7 4 percent reduction applies to the standard Federal rate before the application of the adjustment factors for outliers, exceptions, and budget neutrality, the reduction to the standard Federal rate does not have the effect of simply lowering the FY 1994 Federal rate by 7 4 percent compared to FY 1993. Rather, the 7.4 percent reduction to the standard Federal rate is one factor contributing to the overall 9.33 percent reduction in the FY 1994 Federal rate compared to FY 1993. This is because the 7.4 percent reduction to the standard Federal rate has an effect on the level of the other adjustments applied to determine the FY 1994 Federal rate. In particular, the 7.4 percent reduction to the standard Federal rate affects the budget neutrality adjustment applied to assure that aggregate payments equal 90 percent of estimated aggregate costs. Since the standard Federal rate before the budget adjustment has already been reduced by 7.4 percent, a lesser reduction to the rate (and, therefore, a higher budget neutrality adjustment factor) is necessary to meet the 90 percent target. This is the primary reason why the budget neutrality adjustment factor has increased from 0.8726 in the proposed rule to 0.8947 in this final rule, despite the reduction in the FY 1994 budget neutrality target, which we discuss in section III.A.5 below. (The increase in the budget neutrality adjustment factor due to the reduction of the standard Federal rate would have been greater if it had not been partially offset by the effect of the reduction in the budget neutrality target.)

The full effect of the 7.4 percent reduction to the standard Federal rate will become evident only when the budget neutrality requirement expires in FY 1996. Until FY 1996, the reduction to the standard Federal rate will have no effect on aggregate capital prospective payments. This is because aggregate payments are set at 90 percent of estimated reasonable costs in FY 1994 and FY 1995, as required by the budget neutrality provision. Barring further changes to the system (such as further reductions in the standard Federal rate), the FY 1996 Federal rate should be 7.4 percent lower than it would have been in the absence of the reduction to the standard Federal rate. Therefore, the reduction in the standard Federal rate will yield substantial savings beginning in FY 1996.

2. *Standard Federal rate update.* Section 412.308(c)(1)(i) provides that for FY 1993 through FY 1995, the standard Federal rate is updated on the basis of a lagged 2-year moving average of the actual increase, adjusted for case-mix index change, in Medicare inpatient capital-related costs per case for the fiscal years 3 and 4 years before the fiscal year in question. For FY 1994, the increase is based on the increase in Medicare inpatient capital-related costs per case from FY 1989 through FY 1991. These are the most recent fiscal years for which cost report data are available. To determine the amount of the increase, we apportioned a hospital's costs and discharges to each fiscal year based on the number of months in the hospital's cost reporting period that occurred

during the applicable fiscal year. Thus, an individual hospital may have more than one cost report included in the calculation.

In the proposed rule, we stated that the proposed FY 1994 update factor for the Federal rate would be 3.10 percent. In this final rule, based on the most recent data, we are providing that the final FY 1994 update factor for the Federal rate is 3.04 percent. The following chart, based on the June 1993 update of HCRIS, shows how this figure was computed:

CAPITAL COSTS PER CASE INCREASE FROM COST REPORT DATA

Fiscal year	(1) Number hospitals 1st HCR	(2) Number hospitals 2nd HCR[1]	(3) Unadj. capital cost per case	(4) Increase in cost per case (unadj.)	(5) Audit adjusted capital cost per case[2]	(6) Increase in adjusted cost per case	(7) Average 2-year increase in adjusted cost per case	(8) Observed CMI	(9) Adj. to CMI	(10) Adjusted CMI	(11) CMI adjusted increase	(12) Update (average two-year increase of CMI adjusted rate of increase)
1989	4,299	5,493	$509.54	.....	$506.26							
1990	4,269	5,411	$555.31	8.98%	$538.65	6.40%	.....	0.85%	1.22%	2.08%	4.23%	
1991	4,162	5,287	$608.23	9.53%	$562.50	4.43%	5.42%	2.51%	.....	2.51%	1.87%	3.04%

[1] Columns 1 and 2 represent the numbers of hospital cost reports used in developing capital costs per case figures in column 3. Since hospital cost reporting periods do not all coincide with the Federal fiscal year, data for a given Federal fiscal year must be derived from more than one hospital cost report, allocated proportionately to the Federal fiscal year For example, for a hospital with a cost reporting period beginning January 1, one quarter of its cost report for the period ending December 31, 1987 would be allocated to Federal fiscal year 1988, and three quarters of its cost report for the period ending December 31, 1988 would be allocated to Federal fiscal year 1987. Column 1 represents the number of cost reports used that ended in the Federal fiscal year in question. Column 2 represents the number of cost reports used that began in the Federal fiscal year in question. Column 2 is greater than Column 1 because Column 2 includes cost reports for hospitals whose cost reporting period coincides with the Federal year along with cost reports for those hospitals whose cost reporting periods do not coincide with the Federal fiscal year Column 1 includes only cost reports for hospitals whose cost reporting periods do not coincide with the Federal fiscal year.

[2] Figures in column 5 represent capital costs per case, adjusted for the anticipated effects of cost report audits and reopenings, from the June 1993 update of HCRIS. The following factors were used in adjusting capital costs per case figures from column 3 for the effects of audits and reopenings:

Audit Adjustment Applied to As-Submitted Cost Reports
Cost reporting periods beginning in:
FY 1989—0.9107
FY 1990—0.9265
FY 1991—0.9063
Audit Adjustment Applied to Settled Cost Reports
All years—1.0036
The costs per case figures that result after the application of these audit adjustments to submitted and settled cost reports, respectively, are entered in Column 5.

For the final rule, we have recalculated the FY 1994 update factor on the basis of the June 1993 update of HCRIS. We note that the final FY 1994 update factor has changed only slightly from the proposed update of 3.10 percent. This 0.06 percentage point difference is due to slightly lower capital costs per case amounts in the most recent HCRIS data.

As we explained in the final rule for FY 1990 (54 FR 36471), 1.22 percent of the total increase in case mix from FY 1987 to FY 1988 resulted from FY 1988 GROUPER changes and recalibration. In other words, 1.22 percent of the increase in case mix from FY 1987 to FY 1988 did not represent an increase in resource requirements that should be recognized in increased payments in subsequent years. To assure that this distortion was not continued into subsequent years, we reduced the FY 1990 weights to remove prospectively the 1.22 percent increase in the average weight attributable to GROUPER changes and recalibration in FY 1988. In computing the capital update factor, we adjust each year's rate of increase in capital costs per case for observed case-mix increase in that year. Since 1.22 percent was removed from the FY 1990 weights to adjust for the effects of administrative changes on the DRG weights in 1988, that reduction must be reincorporated into the case mix increase for FY 1990. The purpose of this adjustment is to assure consistent measures of case mix.

We note that the effect of the update on the Federal rate is limited by the requirement of budget neutrality until FY 1996. Thus, although the update factor for inflation is 3.04 percent, the FY 1994 Federal rate is lower than the FY 1993 Federal rate because of the effects of the budget neutrality adjustment and the Public Law 103–66 reduction to the standard Federal rate. We also note that the FY 1994 budget neutrality target is determined by the estimate of FY 1994 capital costs, not by the 2-year average update factor applied to the FY 1993 Federal rate. We discuss the basis for the budget neutrality target further in section III.A.4 below.

Comment: One commenter recommended that an add-on adjustment be employed in setting the update factor to account for appropriate changes in new technology prior to the adoption of an analytical update framework in FY 1996.

Response The present update factor is based on a 2-year moving average of actual increases in Medicare inpatient capital-related costs per discharge. Since the actual costs include spending for new technology, the cost of new technology is already accounted for in the update factor. A separate adjustment for new technology would constitute double-counting and is therefore not appropriate, as long as the update is determined by the average of actual cost increases in recent years. However, we do believe that the cost of new technology is a factor that should be accounted for in the capital analytical update framework that will be used beginning in FY 1996. We discuss the methodology for incorporating appropriate changes in cost for new

technology into the update framework in appendix D.

3. *Outlier payment adjustment factor.* Section 412.312(c) establishes a unified outlier methodology for inpatient operating and inpatient capital-related costs. A single set of thresholds is used to identify outlier cases for both inpatient operating and inpatient capital-related payments. Outlier payments are made only on the portion of the Federal rate that is used to calculate the hospital's inpatient capital-related payments (for example, 30 percent for cost reporting periods beginning in FY 1994 for hospitals paid under the fully prospective methodology). Section 412.308(c)(2) provides that the standard Federal rate for inpatient capital-related costs be reduced by an adjustment factor equal to the estimated additional payments under the Federal rate for outlier cases, determined as a proportion of inpatient capital-related payments under the Federal rate. The outlier thresholds are set so that estimated outlier payments are 5.1 percent of estimated inpatient operating payments. The inpatient capital-related outlier reduction factor is then set according to the estimated inpatient capital-related outlier payments that would be made if all hospitals were paid according to 100 percent of the Federal rate. For purposes of calculating the outlier thresholds and the outlier reduction factor, we model all hospitals as if paid 100 percent of the Federal rate because, as explained above, outlier payments are made only on the portion of the Federal rate that is included in the hospital's inpatient capital-related payments.

The September 1, 1992 final rule, we estimated that outlier payments for FY 1993 would equal 5.04 percent of inpatient capital-related payments based on the Federal rate. Accordingly, we applied an outlier adjustment factor of 0.9496 to the Federal rate. Based on the thresholds as set forth in section II.A.4.d of the preamble, we estimate that outlier payments will equal 5.46 percent of inpatient capital-related payments based on the Federal rate in FY 1994. We are therefore applying an outlier adjustment factor of 0.9454 to the Federal rate. The outlier reduction factors are not built permanently into the rates; that is, they are not applied cumulatively in determining the Federal rate. Therefore, the net change in the outlier adjustment to the Federal rate for FY 1994 is .9454/.9496 or 0.9956. Thus, the outlier adjustment reduces the FY 1994 Federal rate by 0.44 percent (0.9956–1) compared with the FY 1993 outlier adjustment.

4. *Budget neutrality adjustment factor for changes in DRG weights and the geographic adjustment factor.* Section 412.308(c)(4)(ii) requires that the Federal rate be adjusted so that estimated aggregate payments for the fiscal year based on the Federal rate after any changes resulting from the annual reclassification and recalibration of the DRG weights and changes in the geographic adjustment factor equal estimated aggregate payments that would have been made on the basis of the Federal rate without such changes. We used the actuarial model described in appendix B to estimate the aggregate payments that would have been made on the basis of the Federal rate without changes in the DRG classifications and weights and in the geographic adjustment factor. We also used the model to estimate aggregate payments that would be made on the basis of the Federal rate as a result of those changes. We then used these figures to compute the adjustment required to maintain budget neutrality for changes in DRG weights and in the geographic adjustment factor.

For FY 1993, we calculated a GAF/DRG budget neutrality factor of 0.9980. For FY 1994, we proposed a GAF/DRG budget neutrality factor of 1.0046. In this final rule, we are applying a factor of 1.0053 to meet this requirement. The GAF/DRG budget neutrality factors are built permanently into the rates; that is, they are applied cumulatively in determining the Federal rate. This follows from the requirement that aggregate payments each year be no more than it is estimated that they would have been in the absence of the changes from the annual DRG reclassification and recalibration and in the geographic adjustment factor. The incremental change in the adjustment from FY 1993 to FY 1994 is 1.0053. The cumulative change in the GAF/DRG budget neutrality adjustment to the Federal rate is 1.0033 (.9980 x 1.0053).

We note that this factor accounts for changes due to DRG classification changes and recalibration and in the geographic adjustment factor. It also incorporates the effects on the geographic adjustment factor of FY 1994 geographic reclassification decisions made by the MGCRB compared to FY 1993 decisions. However, it does not account for changes in payments due to changes in the disproportionate share and indirect medical education adjustment factors or in the large urban add-on.

5. *Budget neutrality adjustment factor to assure aggregate payments equal 90 percent of reasonable cost payments.* Section 1886(g)(1)(A) of the Act requires that aggregate payments made each year in FY 1992 through FY 1995 for hospital inpatient services be reduced in a manner that results in payments equal to 90 percent of what the Secretary estimates would have been payable on a reasonable cost basis for inpatient capital-related costs in that year. No retroactive increase or decrease is made if aggregate payments are greater than or less than 90 percent of actual Medicare inpatient capital-related costs for that year.

Section 412.352 of the regulations provides that HCFA determines an adjustment to the hospital-specific rate and the Federal rate proportionately, so that the estimated payments for capital in each year from FY 1992 through FY 1995 will equal 90 percent of what would have been payable that year on a reasonable cost basis. The effect of this provision is that the reduction required under section 1886(g)(1)(A) of the Act is realized entirely through a reduction in the prospective payments for capital costs (that is, no reduction is made for this purpose in the reasonable cost payments for old capital) in FY 1992 through FY 1995

For FY 1993, we determined that a budget neutrality factor of 0.9162 was required, so that estimated aggregate payments for inpatient capital-related costs would equal 90 percent of what would have been payable on a reasonable cost basis in that year. For FY 1994, we proposed a budget neutrality factor of 0.8726. In this final rule, we are establishing a budget neutrality factor of .8947. The budget neutrality adjustment factor for FY 1994 is 2.35 percent lower than the FY 1993 budget neutrality adjustment (0.9162), and 2.53 percent higher than the budget neutrality factor in the proposed rule (0.8726). Below we explain how two factors, the 7.4 percent reduction to the standard Federal rate and the decrease in the budget neutrality target for FY 1994, account for these changes.

As we explain in appendix B, we determine the budget neutrality adjustment factor on the basis of a projected FY 1994 capital costs per case budget neutrality target. We develop this target from available data on average Medicare capital costs per case for all short-term acute care hospitals subject to the capital prospective payment system (that is, data from excluded and waiver hospitals were eliminated). For the May 26, 1993, proposed rule, we had data from the March 1993 update of HCRIS on the average Medicare capital cost per case for FY 1991. We adjusted this figure for the effects of audits and updated it to FY 1994 on the basis of estimated rates

of increase in Medicare capital costs per case. For the final rule, we have actual data for FY 1991 from the June 1993 HCRIS update. We also have revised estimates of the rates of increase in Medicare capital costs per case for the years FY 1992 through FY 1994.

In the preposed rule for FY 1994 (58 FR 30277–30279), we explained how changes in the FY 1991 cost per case data and in the rate of increase estimates for FY 1992 through FY 1994 produced an 8.67 percent decline in the budget neutrality target for FY 1994. That decline was the result of two factors. First, the actual FY 1991 capital cost per case from the March 1993 HCRIS update that we used in the proposed rule for FY 1994 was 5.20 percent lower than we had estimated in the final rule for FY 1993.

Second, in the final rule for FY 1993, we had estimated that there would be a 31.63 percent increase in Medicare inpatient capital cost per case between FY 1991 and FY 1994. In the proposed rule for FY 1994, we estimated that there would be a 26.68 percent increase in Medicare inpatient capital cost per case between FY 1991 and FY 1994.

For this final rule, there is a further 2.10 percent decline in the FY 1994 budget neutrality target, for a cumulative decline in the target of 10.59 percent since the final rule for FY 1993. The rate-of-increase estimate for FY 1992 through FY 1994 has declined further from 26.68 percent in the proposed rule to 24.30 percent in this final rule. The following chart shows how the rate-of-increase estimates for FY 1992 through FY 1994 were calculated in the proposed rule and in this final rule for FY 1994.

COMPARISON OF FACTORS FOR MEDICARE INPATIENT CAPITAL COST PER CASE INCREASES: FY 1994 PROPOSED RULE (PR) AND FY 1994 FINAL RULE (FR)

[In percentages]

Estimate for FY	(1) Total inpatient capital			(2) Medicare share			(1)x(2)=(3) Medicare inpatient capital			(4) Medicare enrollment			(5) Admissions incidence			(4)x(5)=(6) Medicare admissions			(3)/(6)=(7) Estimate increase in Medicare inpatient capital cost per case		
	FY94 PR	FY94 FR	Change	FY94 PR	FY94 FR	Change	FY94 PR	FY94 FR	Change	FY94 PR	FY94 FR	Change	FY94 PR	FY94 FR	Change	FY94 PR	FY94 FR	Change	FY94 PR	FY94 FR	Change
1992	7.07	6.77	−0.34	3.10	2.81	−0.28	10.68	9.77	−0.82	1.99	1.82	−0.17	2.72	2.75	0.03	4.77	4.62	−0.14	5.64	4.92	−0.68
1993	8.00	8.00	0.00	3.30	3.30	0.00	11.56	11.56	0.00	1.89	2.03	0.14	0.30	1.02	0.72	2.19	3.07	0.86	9.17	8.24	−0.85
1994	9.00	9.00	0.00	3.60	3.60	0.00	12.92	12.92	0.00	1 73	2.11	0.37	0.97	1.03	0.06	2.71	3.17	0.45	9.94	9.45	−0.45

The chart shows the causes of the decline in the rate-of-increase projections since the proposed rule. For FY 1992, the decline in the projected rate of increase is due to a 0.82 percent decline in the projected rate of increase of total Medicare capital costs and a 0.14 percent increase in the projected rate of increase of Medicare admissions. Together these factors produced a 0.68 percent decline in the projected rate of increase of Medicare inpatient capital costs per case. For FY 1993, the 0.85 percent decline in the projected rate of increase is due entirely to the decline in the projected rate of increase in Medicare admissions. For FY 1994, the 0.45 percent decline in the projected rate of increase is also due entirely to the decrease in the projected rate of increase in Medicare admissions.

In addition to the decline in the rate of increase estimates since the proposed rule, there has been a slight (−0.13 percent) decrease in the FY 1991 cost per case in the June 1993 HCRIS data, compared to the March 1993 HCRIS data which we used in the proposed rule. The following chart shows the combined effect of the reduced rates of increase estimates and the reduced FY 1991 cost per case by comparing the projections from FY 1991 to FY 1994 at the time of the proposed rule and in this final rule for FY 1994:

EFFECT OF REVISED RATE OF INCREASE ESTIMATES ON CALCULATION OF FY 1994 BUDGET NEUTRALITY TARGET

	Capital cost per case	Percent change in rate of increase	Percent change in capital cost per case
FY 1991 Cost per Case:			
Proposed: March 93 HCRIS	[1] $566.98	N/A	−0.13
Final: June 93 HCRIS	[2] 566.220		
FY 1992 Adjusted Cost:			
Proposed Rate: 5.64%	598.96		
Final Rate: 4.92%	594.09	−0.68	−0.81
FY 1993 Adjusted Cost:			
Proposed Rate: 9.17%	653.91		
Final Rate: 8.24%	643.05	−0.85	−1.66
FY 1994 Adjusted Cost:			
Proposed Rate: 9.94%	718.93		
Final Rate: 9.45%	703.85	−0.45	−2.10
Cumulative		−1.97	

[1] FY 1991 cost per case based on March 1993 HCRIS data, audit-adjusted, excluding waiver hospitals and PPS-excluded hospitals.
[2] FY 1991 cost per case based on June 1993 HCRIS data, audit-adjusted, excluding waiver hospitals and PPS-excluded hospitals.

The chart shows that the cumulative effect of the revised rates of increase is to lower the FY 1994 budget neutrality target by 1.97 percent. Together with the 0.13 percent decline due to updated HCRIS data, this accounts for the 2.10

percent reduction in the FY 1994 capital cost per case budget neutrality target compared to the level estimated in the FY 1994 proposed rule. In turn, the 2.10 percent reduction in the FY 1994 budget neutrality target since the proposed rule, together with the 8.67 percent decline between the final rule for FY 1993 and the proposed rule, accounts for the 10.59 percent decline in the FY 1994 budget neutrality target in this final rule compared to the final rule for FY 1993.

The cumulative 10.59 percent reduction in the FY 1994 budget neutrality target, together with the effect of the 7.4 percent reduction in the standard Federal rate, accounts for the 2.35 percent reduction in the FY 1994 budget neutrality adjustment compared to the FY 1993 budget neutrality adjustment. The effect of the decline in the budget neutrality target alone, in the absence of the 7.4 percent reduction to the standard Federal rate, would have been an even lower budget neutrality adjustment for FY 1994. We estimate that, in the absence of the 7.4 percent reduction to the standard Federal rate, the FY 1994 budget neutrality adjustment would have been 0.8576 instead of the 0.8947 in this final rule. (In making this estimate, we used the same outlier effects as we did with the 7.4 percent reduction to the standard Federal rate. If we had recalibrated outliers for the unreduced standard Federal rate, the estimated rate and budget neutrality factor might have been slightly different. This estimate is, however, adequate for purposes of evaluating the relative impact of the 7.4 percent reduction to the standard Federal rate.) With a base Federal rate that is 7.4 percent lower, a lesser reduction to the rate (and therefore a higher budget neutrality adjustment factor, 0.8947 as opposed to 0.8576) is adequate to meet the lower FY 1994 budget neutrality target. Thus, the cause of the 2.35 percent reduction in the FY 1994 budget neutrality adjustment compared to FY 1993 arises largely from the 10.59 percent decline in the budget neutrality target, partially offset by the effect of the 7.4 percent reduction to the standard Federal rate.

The decline in the budget neutrality target and the 7.4 percent reduction to the standard Federal rate also account for the 2.53 percent increase in the final FY 1994 budget neutrality adjustment compared to the proposed rule. The increase in the adjustment since the proposed rule is due to the effect of the 7.4 percent reduction to the standard Federal rate (which allows a lesser reduction to the rate, and hence a higher adjustment factor, as explained above), partially offset by the 2.10 percent decline in the FY 1994 budget neutrality target (which reduces the budget neutrality factor) since the proposed rule.

For FY 1994, we proposed a budget neutrality factor of 0.8726 to realize the 90 percent target. In this final rule, the budget neutrality adjustment factor is 0.8947. The budget neutrality factors are not built permanently into the rates; that is, the factors are not applied cumulatively in determining the Federal rate. The net adjustment to the FY 1994 Federal rate will therefore be .8947/.9162 or 0.9765.

Comment: One commenter noted that the most significant factor in the proposed 5.37 percent decrease in the Federal rate was the change in the budget neutrality factor. The commenter contended that the lower estimates of capital spending which caused the change in the budget neutrality factor indicate either that hospitals are controlling their spending or that reimbursement has been insufficient to meet the expected level of capital spending. The commenter contended that, under either circumstance, it was inappropriate to propose to further reduce the level of Medicare payment.

Response: Whatever the causes of the declining capital cost per case target for setting the budget neutrality target, we are required to adjust the Federal rate and the hospital-specific rate so that aggregate payments under the prospective payment system for capital-related costs equal 90 percent of what it is estimated would have been paid on the basis of reasonable costs. Furthermore, we did not propose a reduction in payments, as the commenter states. As we have stated before, we estimated that aggregate payments under the prospective payment system for capital-related costs would have increased 3.8 percent under the rates and factors in the proposed rule. In this final rule, we estimate that aggregate payments will increase 2.99 percent. We do not believe that the level of payments under the capital prospective payment system has been inadequate, especially since the estimated 2.99 percent increase in payments for FY 1994 represents an increase over payments that we estimate were 95.64 percent of cost in FY 1993 and 98.56 percent of cost in FY 1992.

Comment: One commenter expressed concern that inaccurate estimates of the budget neutrality target would create a vicious cycle in which payments are reduced, leading to increased interest rates for hospital financing, thus resulting in further underestimations of the actual amount of capital expenditures.

Response: Since aggregate payments increase both under the rates and factors in the proposed rule and this final rule, the commenter's concerns are unfounded. We also note that our most recent estimates of capital cost per case increases suggest that we previously *over*-estimated, rather than under-estimated, the amounts of capital expenditures in recent years.

Comment: One commenter noted that the proposed rule included the effect of reductions in FY 1991, FY 1992, and FY 1993 capital cost per case from previously published amounts. The commenter contended that, to protect the prospective nature of the system, HCFA should not be making retroactive changes to previously published amounts. Another commenter noted that changes in these estimates indicates the need for more accurate forecasts of actual hospital capital expenditures.

Response: It is precisely the need to make better forecasts of capital cost per case that requires us to revise previously published figures. For example, we have revised our estimates of capital cost per case increases in FY 1992, FY 1993, and FY 1994. We base these estimates on the best data and trend analysis available at the time. As we update the data and trend analysis, the accuracy of these estimates should increase. The commenter's concern about the accuracy of our estimates confirms our practice of revising them as better data and trend analysis become available. The prospective nature of the system is not threatened by revising previous estimates of cost per case in various years, since we use the revised estimates only to set the budget neutrality adjustment factor and the rate for the current year, not to revise the rates for prior years.

6. *Exceptions payment adjustment factor.* Section 412.308(c)(3) requires that the standard Federal rate for inpatient capital-related costs be reduced by an adjustment factor equal to the estimated additional payments for exceptions under § 412.348 determined as a proportion of total payments under the hospital-specific rate and Federal rate. The model developed for determining the budget neutrality adjustment factor is also used to estimate payments under the exceptions payment process and to determine the exceptions payment adjustment factor.

For FY 1993, we estimated that exceptions payments would equal 2.44 percent of aggregate payments based on the Federal rate and the hospital-specific rate. Therefore, we applied an exceptions reduction factor of 0.9756 (1–0.0244) in determining the Federal rate. For FY 1994, we estimated in the

May 26, 1993, proposed rule that exceptions payments would equal 6.01 percent of aggregate payments based on the Federal rate and the hospital-specific rate. Therefore, we proposed to apply an exceptions reduction factor of 0.9399 to determine the FY 1994 Federal rate. For the final rule, we estimate that exceptions payments for FY 1994 will equal 5.15 percent of aggregate payments based on the Federal rate and the hospital-specific rate. We are therefore applying an exceptions payment reduction factor of 0.9485 to the Federal rate for FY 1994.

The final exceptions reduction factor for FY 1994 is thus 2.35 percent lower than the factor for FY 1993, and 0.91 percent higher than the factor in the FY 1994 proposed rule. We have always expected exceptions payments to increase during the transition period as payments are based increasingly on the Federal rate. This explains the higher level of exceptions payments for FY 1994 as compared to FY 1993.

We believe that two factors account for the 0.91 percent increase in the exceptions reduction factor since the proposed rule. One is the 2.10 percent reduction in the budget neutrality target, as explained in section III.A.5 above. Since hospital costs in FY 1994 are now estimated to be 2.10 percent lower than previously estimated, fewer hospitals than we originally estimated will qualify for exceptions payments by falling below their minimum payment levels, and those that still do qualify may receive somewhat smaller payments.

The other factor is the 7.4 percent reduction to the standard Federal rate. Because of this reduction, we are implementing a special redetermination of the payment methodology for hospitals previously paid under the fully prospective payment methodology. As a result of this special redetermination, some of these hospitals will receive payment under the more advantageous hold-harmless payment methodology during FY 1994 and through the rest of the transition. Fewer of these hospitals than we originally estimated should thus qualify for exceptions payments by receiving regular payments that fall short of their minimum payment levels.

The exceptions reductions factors are not built permanently into the rates; that is, the factors are not applied cumulatively in determining the Federal rate. The net adjustment to the FY 1994 Federal rate is therefore 9485/.9756, or 0 9722.

Comment Two commenters noted that exceptions payments are funded by reducing the Federal rate and the hospital-specific rates. Thus, the commenters argued that inaccurate assumptions can result in withholding more funds than are needed to make exceptions payments. The commenters contended that, in the absence of provisions to redistribute excess money from the pool of money reserved for exceptions, inaccurate projections can artificially reduce payment rates.

Response As we stated in the final rule for the capital prospective payment system (56 FR 43413), there is no "pool" set aside in a fund for exceptions payments. Rather, the Federal rate and hospital-specific rates are reduced by the estimated amount of exceptions payments for the fiscal year. Consistent with the concept of exceptions payments, the exceptions reduction factor (like the other factors) is determined on the basis of the best data available when the factor is established. There is no retroactive adjustment if actual payments are more or less than anticipated. The appropriate adjustment factors are reestimated annually on the basis of new data, but no retroactive correction is made for prior years. Not only would such an adjustment violate the prospective nature of rate-setting, but it would also be impractical. It would require an adjustment both when exception payments are less than the amount anticipated in setting the adjustment and when payments exceed the amount anticipated in setting the adjustment.

Also, we note that even if actual exceptions payments are lower than estimated, this does not mean total payments are lower than estimated. The lower estimated level of exceptions payments for FY 1993 was the direct result of the fact that regular payments were estimated to have exceeded the budget neutrality target that year. These factors are directly related; that is, as regular payments exceed the budget neutrality target, fewer hospitals fall short of the minimum payment levels that qualify them for exceptions payments, and those that do qualify receive smaller exceptions payments. The lower estimate of exceptions payments for FY 1993 was thus due to the fact that fewer exception payments, and lower exception payment amounts, were necessary to ensure that hospitals received their minimum payment levels. We do not believe that, because we now estimate that regular payments exceeded the budget neutrality target in any fiscal year, we should then also pay hospitals more (in the form of the "redistribution" recommended by the commenters) for not making exceptions payments that would have exceeded the established minimum payment levels.

Comment. Several commenters contended that HCFA has not adequately justified why exceptions payments were estimated to be 6.01 percent of aggregate payments in FY 1994 as compared to only 2.45 percent in FY 1993. The commenters also noted that HCFA estimated in the proposed rule that exceptions payments would increase six-fold in FY 1994 over FY 1993. These commenters contended that HCFA should not change estimates of exceptions without substantial new information. Two commenters contended that the fact that the observed level of exceptions in FY 1993 was 63 percent lower than estimated in the final rule for FY 1993 raises questions about the validity of HCFA's estimation method.

Response We stated in the proposed rule (58 FR 30275) that "we now estimate that exceptions for FY 1993 will be 63 percent lower than we originally estimated." All our current figures on exceptions are estimates, and thus we made no statement about the "observed" level of exceptions payments for FY 1993. We will not begin to have data on actual exceptions payments until cost reports for FY 1992 are settled in FY 1995 and FY 1996. In the meantime, our estimates of the level of exceptions payments in any given year change with new data or revised estimates of those factors in the system that affect the level of exceptions payments.

In the FY 1993 final rule, we estimated that exceptions payments would be 2.44 percent of aggregate payments based on the Federal rate and the hospital-specific rate (not 2.45 percent of aggregate payments under the capital prospective payment system, as stated by the commenters). In the May 26, 1993 proposed rule for FY 1994, we estimated that exceptions payments for FY 1993 would be 63 percent lower than our estimate last year. As we explained in the response to the previous comment, the revised estimate of exceptions for FY 1993 was related to the revised budget neutrality estimate for FY 1993. Since our more recent estimate showed that aggregate payments under the prospective payment system for capital-related costs in FY 1993 were 5.89 percent higher than the budget neutrality target, we also estimate that fewer hospitals qualified for exceptions payments by falling short of the minimum payment levels, and that those who did qualify received smaller exceptions payments.

In the proposed rule for FY 1994, we estimated that exceptions payments in FY 1994 would be 6.01 percent of aggregate payments based on the

Federal rate and the hospital-specific rate. In this final rule, we are estimating that exceptions payments in FY 1994 will be 5.15 percent of aggregate payments based on the Federal rate and the hospital-specific rate. We also currently estimate that exceptions payments in FY 1993 will be 70 percent lower than we estimated at the time of the final rule in FY 1993. This revised estimate is directly related to our estimate that aggregate payment will be 95.64 percent of reasonable cost, or 6.27 percent over the budget neutrality target in FY 1993. The higher level of payments means that fewer hospitals will qualify for exceptions payments by falling below their minimum payments, and that those that still do qualify will receive lower payments.

The regulations require us to reduce the Federal rate and the hospital-specific rate each year by a factor equal to the estimated additional payments for exceptions, determined as a proportion of total payments under the hospital-specific rate and the Federal rate. We use the best available data each year to determine our estimates as appropriate, and we continue to refine our methodology as appropriate. We do not believe that we should retain estimates that no longer have the best empirical and methodological support. We also do not believe that the prospective nature of the system is jeopardized by refining our estimates, since we do not retroactively adjust the exceptions reductions factors for previous years, but rather use our revised estimates to set the factor more accurately for the current year.

We have always expected exceptions payments to increase during the transition as payments are based increasingly on the Federal rate and decreasingly on factors related to hospital cost experience (that is, the hospital-specific rate, which was derived from hospital base year costs, and the hold-harmless payment of 85 percent for old capital costs). While our estimates concerning the annual amount of exceptions payments have changed with new data and new estimates on factors that affect exceptions payments, all our estimates have been consistent with this expectation.

7. *Standard Federal rate for FY 1994.* For FY 1993, the Federal rate was $417.29. With the changes we proposed to the factors used to establish the Federal rate, we proposed that the FY 1994 Federal rate would be $394.88. In this final rule, we are establishing an FY 1994 Federal rate of $378.34. The final Federal rate for FY 1994 was calculated as follows:

- The FY 1994 update factor is 1.0304.
- The FY 1994 outlier adjustment factor is 0.9454.
- The FY 1994 budget neutrality adjustment factor that is applied to the standard Federal payment rate for changes in the DRG relative weights and in the geographic adjustment factor is 1.0053.
- The FY 1994 budget neutrality adjustment factor that is applied to the standard Federal payment rate and the hospital-specific rate to assure that aggregate payments equal 90 percent of payments that would have been made on a reasonable cost basis is 0.8947.
- The FY 1994 exceptions payments adjustment factor is 0.9485.

Since the Federal rate has already been adjusted for differences in case mix, wages, cost of living, indirect medical education costs, and payments to hospitals serving a disproportionate share of low-income patients, we proposed to make no additional adjustments in the standard Federal rate for these factors other than the budget neutrality factors for changes in the DRG relative weights and the geographic adjustment factor.

Comment. One commenter contended that the proposed reduction in capital payments did not allow adequately for inflation. Another commenter contended that the proposed reduced rate would inhibit hospitals' ability to pay for preexisting debt. Other commenters contended that the proposed reduction in the Federal rate would increase the financial risk of hospital funding arrangements and thus increase the interest rates charged to hospitals.

Response. We did not propose a reduction in capital payments, but in the capital Federal rate. Under the proposed rule, aggregate payments under the capital prospective payment system would have increased by 3.8 percent. Since section 1886(g)(1)(A) of the Act requires that estimated payments equal 90 percent of reasonable costs for capital-related expenses, until the expiration of the budget neutrality requirement in FY 1996, payments under the capital prospective payment system can be expected to increase as capital costs per case increase. The proposed increase from FY 1993 to FY 1994 was less than the total estimated increase in capital costs per case between FY 1993 and FY 1994 because, at the time of the proposed rule, we estimated that FY 1993 payments were 95.3 percent of reasonable costs, or 5.89 percent higher than the budget neutrality target. The estimated increase in cost per case in FY 1994 divided by the excess of estimated FY 1993 payments over the budget neutrality target set the rate of increase in payments in the proposed rule (1.0994/1.0589=1.038, a 3.8 percent increase).

As we explained in the introduction to section III above, we now estimate that FY 1993 payments were 95.64 percent of reasonable costs, or 6.3 percent higher than the budget neutrality target. The estimated increase in cost per case in FY 1994 divided by the estimated excess of FY 1993 payments over the budget neutrality target (1.0945/1.0627) yields the estimated 2.99 percent increase in aggregate payments with the rates and factors we are adopting in this final rule. We believe that this increase in payments, together with the payments that we estimate that hospitals have received during the first 2 years of the prospective payment system for capital-related costs, should allow hospitals to pay for preexisting debt. The increase in payments is a much more important factor in gauging the adequacy of payments, and the risks of hospital financing arrangements, than changes in the Federal rate alone.

Comment: Several commenters contended that uncertainty in capital reimbursement has caused bond down-ratings. One commenter noted that the proposed 5.4 percent reduction to the Federal rate represented a reversal from the levels previously projected by HCFA. Another commenter stated that changes in the rates from the levels projected make it difficult for a hospital to plan adequately for the coming year.

Response. We are sensitive to the concerns of hospitals that there be predictability in the levels of their capital payments. We make our projections based on the best data available, and we share them so that the public also will have the most current information. At the same time, we have a statutory obligation to assure that payments equal 90 percent of what would have been paid on a reasonable cost basis. To fulfill that statutory obligation, we must revise our estimates for rate-setting purposes as better data become available. When we published our previous projections, we cautioned that they were only estimates, and that they were subject to revisions resulting from continued methodological refinements, more recent data, and payment policy changes. Some differences between the projections and the FY 1994 Federal rate were to be expected.

We are providing a chart that shows how each of the factors and adjustments for FY 1994 affected the computation of the final FY 1994 Federal rate in

comparison to the FY 1993 Federal rate. The final FY 1994 update factor has the effect of increasing the Federal rate 3.04 percent compared to the rate in FY 1993 while the final geographic and DRG budget neutrality factor has the effect of increasing the Federal rate by 0.53 percent. The final FY 1993 exceptions reduction factor has the effect of decreasing the final Federal rate by 2.78 percent compared to the exceptions reduction for FY 1993. The final FY 1994 budget neutrality adjustment factor has the effect of reducing the final FY 1994 rate by 2.35 percent compared to the budget neutrality reduction in FY 1993. Finally, the Public Law 103–66 reduction to the standard Federal rate has the effect of reducing the FY 1994 Federal rate by 7.4 percent. The combined effect of all the proposed changes is to decrease the final Federal rate by 9.33 percent compared to the Federal rate for FY 1993.

COMPARISON OF FACTORS AND ADJUSTMENTS: FY 1993 FEDERAL RATE AND FY 1994 FEDERAL RATE

		Change	Percent change
Public Law 103–66 Standard Federal Rate Reduction	0.9260	0.9260	−7.40
Update factor: [1]			
FY 1993	1.0607		
FY 1994	1.0304	1.0304	3.04
GAF/DRG adjustment factor: [1]			
FY 1993	0.9980		
FY 1994	1.0053	1.0053	0.53
Outlier adjustment factor: [2]			
FY 1993	0.9496		
FY 1994	0.9454	0.9956	−0.44
Exceptions adjustment factor:			
FY 1993 [2]	0.9756		
FY 1994	0.9485	0.9722	−2.78
Budget neutrality adjustment factor: [2]			
FY 1993	0.9162		
FY 1994	0.8947	0.9765	−2.35
Federal Rate:			
FY 1993	$417.29		
FY 1994	$378.34	0.9067	−9.33

[1] The update factor and the GAF/DRG budget neutrality factors are built permanently into the rates. Thus, for example, the incremental change from FY 1993 to FY 1994 resulting from the application of the 1.0053 GAF/DRG budget neutrality factor for FY 1994 is 1.0053.

[2] The outlier reduction factor, the exceptions reduction factor, and the budget neutrality factor to assure that payments do not exceed 90 percent of what it is estimated would have been paid on the basis of reasonable cost are not built permanently into the rates; that is, these factors are not applied cumulatively in determining the rates. Thus, for example, the net change resulting from the application of the FY 1994 exceptions reduction factor is 0.9485/0.9756, or 0.9722.

We are also providing a chart that shows how the final FY 1994 Federal rate differs from the proposed FY 1994 Federal rate.

COMPARISON OF FACTORS AND ADJUSTMENTS: PROPOSED FY 1994 FEDERAL RATE AND FINAL FY 1994 FEDERAL RATE

		Change	Percent change
Public Law 103–66 Standard Federal Rate Reduction	0.9260	0.9260	−7.40
Update factor:			
Proposed FY 1994	1.0310		
Final FY 1994	1.0304	0.9994	−0.06
GAF/DRG adjustment factor:			
Proposed FY 1994	1.0046		
Final 1994	1.0053	1.0007	0.07
Outlier adjustment factor:			
Proposed FY 1994	0.9455		
Final FY 1994	0.9454	0.9999	−0.01
Exceptions adjustment factor:			
Proposed FY 1994	0.9399		
Final FY 1994	0.9485	1.0091	0.91
Budget neutrality adjustment factor:			
Proposed FY 1994	0.8729		
Final FY 1994	0.8947	1.0253	2.53
Federal Rate:			
Proposed FY 1994	$394.88		
Final FY 1994	$378.34	0.9581	−4.19

This chart shows that the effect of the 7 4 percent reduction to the standard Federal rate which was enacted after the proposed rule, is partially offset by other factors, especially the 2.53 percent increase in the budget neutrality factor.

We discuss the reasons for the change in the budget neutrality factor in section III.A.5 above.

We have refined our budget neutrality and exceptions reduction factors for FY 1994 on the basis of the most recent data at our disposal. We have not retroactively adjusted the Federal rate for FY 1993 in determining the rate for FY 1994.

8. *Special rate for Puerto Rico hospitals.* For FY 1993, the special rate for Puerto Rico hospitals was $320.99. With the changes we proposed making to the factors used to determine the rate, the proposed FY 1994 special rate for Puerto Rico was $303.75, in this final rule, the standard rate for Puerto Rico is $291.03.

B. Determination of Hospital-Specific Rate Update

Section 412.328(e) of the regulations provides that the hospital-specific rate for FY 1994 be determined by adjusting the FY 1993 hospital-specific rate by the following factors:

1. *Hospital-specific rate update factor.* The hospital-specific rate is updated in accordance with the update factor for the standard Federal rate determined under § 412.308(c)(1). For FY 1994, we proposed that the hospital-specific rate be updated by a factor of 1.0310. In this final rule, we are updating the hospital-specific rate by a factor of 1.0304.

2. *Exceptions payment adjustment factor.* For FY 1992 through FY 2001, the updated hospital-specific rate is reduced by an adjustment factor equal to the estimated additional payments for capital-related costs for exceptions under § 412.348, determined as a proportion of the total amount of payments under the hospital-specific rate and the Federal rate. For FY 1994, we estimated in the proposed rule that exceptions payments would be 6.01 percent of aggregate payments based on the Federal rate and the hospital-specific rate. We therefore proposed that the updated hospital-specific rate be reduced by a factor of 0.9399. In this final rule, we are applying an exceptions reduction factor of 0.9485 to the hospital-specific rate. The exceptions reductions factors are not built permanently into the rates; that is, the factors are not applied cumulatively in determining the hospital-specific rate. The net adjustment to the FY 1994 hospital-specific rate is therefore .9485/.9756, or 0.9722.

3. *Budget neutrality adjustment factor.* For FY 1992 through FY 1995, the updated hospital-specific rate is adjusted by a budget neutrality adjustment factor determined under § 412.352, so that estimated aggregate payments under the capital prospective payment system will equal 90 percent of what would have been payable on a reasonable cost basis. (The budget neutrality adjustment for changes in the DRG relative weights and in the geographic adjustment factor is not applied to the hospital-specific rate.) For FY 1994, we proposed a budget neutrality factor of 0.8726. In this final rule, we are applying a budget neutrality factor of 0.8947 to the hospital-specific rate. The budget neutrality factor is not built permanently into the rates; that is, the factor is not applied cumulatively in determining the hospital-specific rate. The net adjustment to the FY 1994 hospital-specific rate is therefore .8947/.9162, or 0.9765.

4. *Net change to hospital-specific rate.* We are providing a chart below to show the net change to the hospital-specific rate. The chart shows the factors for FY 1993 and FY 1994 and the net adjustment for each factor. It also shows that the cumulative net adjustment from FY 1993 to FY 1994 is 0.9784, which represents a decrease of 2.16 percent to the hospital-specific rate, as opposed to the 5.4 percent decrease to the hospital-specific rate in the proposed rule. The lower decrease in the hospital-specific rate in the final rule as compared to the proposed rule is due primarily to the effects of the 7.4 percent reduction to the standard Federal rate. As we have explained in section III.A.5 above, one effect of the reduced standard Federal rate is a higher (.8947 as compared to .8726) budget neutrality adjustment to the final FY 1994 Federal rate and hospital-specific rate compared to the proposed rule. The FY 1994 hospital-specific rate for each hospital is determined by multiplying the FY 1993 hospital-specific rate by the cumulative net adjustment of 0.9784.

FINAL FY 1994 UPDATE AND ADJUSTMENTS TO HOSPITAL-SPECIFIC RATES

		Net adjustment	Percent change
Update factor:			
FY 93	1.0607	.....	.....
FY 94	1.0304	1.0304	3.10
Exceptions payment adjustment factor:			
FY 93	0.9755	.....	.....
FY 94	0.9485	0.9722	−2.78
Budget neutrality factor:			
FY 93	0.9162	.....	.....
FY 94	0.8947	0.9765	−2.35
Cumulative adjustments:			
FY 93	0.9481	.....	.....
FY 94	0.9275	0.9784	−2.16

Note: The update factor for the hospital-specific rate is applied cumulatively in determining the rates. Thus, the incremental increase in the update factor from FY 1993 to FY 1994 is 1.0304. In contrast, the exceptions payment adjustment factor and the budget neutrality factor are not applied cumulatively. Thus, for example, the incremental increase in the budget neutrality factor from FY 1993 to FY 1994 is .8947/9162, or .9765.

C. Calculation of Inpatient Capital-Related Prospective Payments for FY 1994

During the capital prospective payment system transition period, a hospital is paid for the inpatient capital-related costs under one of two alternative payment methodologies: the fully prospective payment methodology or the hold-harmless methodology. The payment methodology applicable to a particular hospital is determined when a hospital comes under the prospective payment system for capital-related costs by comparing its hospital-specific rate to the Federal rate applicable to the hospital's first cost reporting period under the prospective payment system. The applicable Federal rate was determined by adjusting:

• For outliers by dividing the standard Federal rate by the outlier reduction factor for that fiscal year; and,

• For the payment adjustment factors applicable to the hospital (that is, the hospital's geographic adjustment factor, the disproportionate share adjustment factor, and the indirect medical education adjustment factor, where appropriate).

If the hospital-specific rate is above the applicable Federal rate, the hospital is paid under the hold-harmless methodology. If the hospital-specific rate is below the applicable Federal rate, the hospital is paid under the fully prospective methodology.

To take into account the 7 4 percent reduction to the standard Federal rate, the payment methodology for hospitals paid under the fully prospective payment methodology in the last cost reporting period beginning before to October 1, 1993 will be redetermined by comparing the hospital's FY 1994 hospital-specific rate with its FY 1994 applicable Federal rate (that is, the FY 1994 Federal rate adjusted for the effects of the payments adjustment and outlier payments). If the FY 1994 hospital-specific rate is higher than the FY 1994 adjusted Federal rate, the hospital will be paid under the hold-harmless payment methodology during its first cost reporting period beginning after October 1, 1993 and throughout the rest of the transition. We discuss this provision further in section V.D. of the preamble to this final rule.

For purposes of calculating payments for each discharge under both the hold-harmless payment methodology and the fully prospective payment methodology, the standard Federal rate is adjusted as follows: (Standard Federal Rate) × (DRG weight) × (Geographic Adjustment Factor) × (Large Urban Add-on, if applicable) × (for hospitals located in Alaska and Hawaii, COLA adjustment) × (1+Disproportionate Share Adjustment Factor + Indirect Medical Education Adjustment Factor, if applicable). The result is termed the adjusted Federal rate.

Payments under the hold-harmless methodology are determined under one of two formulas. A hold-harmless hospital is paid the higher of:

• 100 percent of the adjusted Federal rate for each discharge; or

• An old capital payment equal to 85 percent (100 percent for sole community hospitals) of the hospital's allowable Medicare inpatient old capital costs per discharge for the cost reporting period plus a new capital payment based on a percentage of the adjusted Federal rate for each discharge. The percentage of the adjusted Federal rate equals the ratio of the hospital's allowable Medicare new capital costs to its total Medicare inpatient capital-related costs in the cost reporting period.

Once a hospital receives payment based on 100 percent of the adjusted Federal rate in a cost-reporting period beginning on or after October 1, 1993 (or the first cost reporting period after obligated capital that is recognized as old capital under § 412.302(c) is put in use for patient care, if later), the hospital continues to receive capital prospective payment system payments on that basis for the remainder of the transition period.

Payment for each discharge under the fully prospective methodology is the sum of:

• The hospital-specific rate multiplied by the DRG relative weight for the discharge and by the applicable hospital-specific transition blend percentage for the cost reporting period; and

• The adjusted Federal rate multiplied by the Federal transition blend percentage.

The blend percentages for cost reporting periods beginning in FY 1994 are 30 percent of the adjusted Federal rate and 70 percent of the hospital-specific rate.

Hospitals may also receive outlier payments for those cases that qualify under the thresholds established for each fiscal year. Section 412.312(c) provides for a single set of thresholds to identify outlier cases for both inpatient operating and inpatient capital-related payments. Outlier payments are made only on that portion of the Federal rate that is used to calculate the hospital's inpatient capital-related payments. For fully prospective hospitals, that portion is 30 percent of the Federal rate for discharges occurring in cost reporting periods beginning during FY 1994. Thus, a fully prospective hospital will receive 30 percent of the capital-related outlier payment calculated for the case for discharges occurring in cost reporting periods beginning in FY 1994. For hold-harmless hospitals paid 85 percent of their reasonable costs for old inpatient capital, the portion of the Federal rate that is included in the hospital's outlier payments is based on the hospital's ratio of Medicare inpatient costs for new capital to total Medicare inpatient capital costs. For hold-harmless hospitals that are paid 100 percent of the Federal rate, 100 percent of the Federal rate is included in the hospital's outlier payments.

The rules to establish outlier thresholds for FY 1994 are published in section II.A.4.d of the Addendum to this final rule. For FY 1994, as proposed, a case qualifies as a cost outlier if the cost for the case (after standardization for the indirect teaching adjustment and disproportionate share adjustment) is greater than the larger of 2 times the prospective payment rate for the case or $36,000. A case also qualifies as a day outlier for FY 1994 if the length of stay is greater than the geometric mean length of stay for the DRG plus the lesser of 3 standard deviations of the length of stay or 23 days.

During the capital prospective payment system transition period, any hospital may also receive an additional payment under an exceptions process if its total inpatient capital-related payments are less than a minimum percentage of its allowable Medicare inpatient capital-related costs. The minimum payment level is established by class of hospital under § 412.348. The minimum payment levels for portions of cost reporting periods occurring in FY 1994 are:

• Sole community hospitals (located in either an urban or rural area), 90 percent;

• Urban hospitals with at least 100 beds and a disproportionate share patient percentage of at least 20.2 percent and urban hospitals with at least 100 beds that qualify for disproportionate share payments under § 412.106(c)(2), 80 percent, and,

• All other hospitals, 70 percent.

Under § 412.348(d), the amount of the exceptions payment is determined by comparing the cumulative payments made to the hospital under the capital prospective payment system to the cumulative minimum payment levels applicable to the hospital for each cost reporting period subject to that system. Any amount by which the hospital's cumulative payments exceed its cumulative minimum payment is deducted from the additional payment that would otherwise be payable for a cost reporting period.

New hospitals are exempted from the capital prospective payment system for their first 2 years of operation and are paid 85 percent of their reasonable costs during that period. A new hospital's old capital costs are its allowable costs for capital assets that were put in use for patient care on or before the later of December 31, 1990 or the last day of the hospital's base year cost reporting period, and are subject to the rules pertaining to old capital and obligated capital as of the applicable date. Effective with the third year of operation, we will pay the hospital under either the fully prospective methodology, using the appropriate transition blend in that Federal fiscal year, or the hold-harmless methodology.

If the hold-harmless methodology is applicable, the hold-harmless payment for assets in use during the base period will extend for 8 years, even if the hold-harmless payments extend beyond the normal transition period.

IV. Rate-of-Increase Percentages for Hospitals and Hospital Units Excluded From the Prospective Payment System

The inpatient operating costs of hospitals and hospital units excluded from the prospective payment system are subject to rate-of-increase limits established under the authority of section 1886(b) of the Act, which is implemented in § 413.40 of the regulations. Under these limits, an annual target amount (expressed in terms of the inpatient operating cost per discharge) is set for each hospital, based on the hospital's own historical cost experience trended forward by the applicable rate-of-increase percentages (update factors). The target amount is multiplied by the number of Medicare discharges in a hospital's cost reporting period, yielding the ceiling on aggregate Medicare inpatient operating costs for the cost reporting period.

Effective with cost reporting periods beginning on or after October 1, 1991, a hospital that has Medicare inpatient operating costs in excess of its ceiling is paid its ceiling plus 50 percent of its costs in excess of the ceiling. Total payment may not exceed 110 percent of the ceiling. A hospital that has inpatient operating costs less than its ceiling will continue to be paid its costs plus the lower of—

- Fifty percent of the difference between the inpatient operating costs and the ceiling; or
- Five percent of the ceiling.

Each hospital's target amount is adjusted annually, at the beginning of its cost reporting period, by an applicable rate-of-increase percentage. Section 13502 of Pub. L. 103–66 amended section 1886(b)(3)(B) of the Act to provide that for cost reporting periods beginning on or after October 1, 1993 and before October 1, 1994, the applicable rate-of-increase percentage is the market basket percentage increase minus the lesser of, one percentage point, or the percentage point difference between 10 percent and the hospital's "update adjustment percentage" except for hospitals with an "update adjustment percentage" of at least 10 percent. The rate-of-increase percentage for hospitals in the latter case will be the market basket percentage increase. The "update adjustment percentage" is the percentage by which a hospital's allowable inpatient operation costs exceeds the hospital's ceiling for the cost reporting period beginning in Federal fiscal year 1990. For cost reporting periods beginning on or after October 1, 1994 and before October 1, 1997, the update adjustment percentage is the update adjustment percentage from the previous year plus the previous year's applicable reduction. The applicable reduction and applicable percentage are then determined in the same manner as for FY 1994. The most recent forecasted market basket increase for FY 1994 for hospitals and hospital units excluded from the prospective payment system is 4.3 percent.

V. Tables

This section contains the tables referred to throughout the preamble to this final rule and in this addendum. For purposes of this final rule, and to avoid confusion, we have retained the designations of Tables 1 through 5 that were first used in the September 1, 1983 initial prospective payment final rule (48 FR 39844). Tables 1a, 1b, 1c, 1d, 3C, 4a, 4b, 4c, 4d, 4e, 5, 6a, 6b, 6c, 6d, 6e, 6f, 6g, 6h, 7A, 7B, 8a, 8b, 9 and 10 are presented below. The tables presented below are as follows:

Table 1a—National Adjusted Operating Standardized Amounts, Labor/Nonlabor
Table 1b—Regional Adjusted Operating Standardized Amounts, Labor/Nonlabor
Table 1c—Adjusted Operating Standardized Amounts for Puerto Rico, Labor/Nonlabor
Table 1d—Capital Standard Federal Payment Rate
Table 3C—Hospital Case Mix Indexes for Discharges Occurring in Federal Fiscal Year 1992
Table 4a—Wage Index and Capital Geographic Adjustment Factor (GAF) for Urban Areas
Table 4b—Wage Index and Capital Geographic Adjustment Factor (GAF) for Rural Areas
Table 4c—Wage Index and Capital Geographic Adjustment Factor (GAF) for Hospitals That Are Reclassified
Table 4d—Average Hourly Wage for Urban Areas
Table 4e—Average Hourly Wage for Rural Areas
Table 5—List of Diagnosis Related Groups (DRGs), Relative Weighting Factors, Geometric Mean Length of Stay, and Length of Stay Outlier Cutoff Points Used in the Prospective Payment System
Table 6a—New Diagnosis Codes
Table 6b—New Procedure Codes
Table 6c—Invalid Diagnosis Codes
Table 6d—Revised Diagnosis Code Titles
Table 6e—Revised Procedure Code Titles
Table 6f—Additions to the CC Exclusions List
Table 6g—Deletions to the CC Exclusions List
Table 6h—Additional OR Procedures That Group to DRG 477
Table 7A—Medicare Prospective Payment System Selected Percentile Lengths of Stay FY 92 MedPAR Update 12/92 GROUPER V 10.0
Table 7B—Medicare Prospective Payment System Selected Percentile Lengths of Stay FY 92 MedPAR Update 12/92 GROUPER V 11.0
Table 8a—Statewide Average Operating Cost-to-Charge Ratios for Urban and Rural Hospitals (Case Weighted) April 1993
Table 8b—Statewide Average Capital Cost-to-Charge Ratios for Urban and Rural Hospitals (Case Weighted) April 1993
Table 9—1992 Transfer Adjusted Case-Mix Index and Transfer Adjustment to Discharges for Capital Hospital-Specific Rate Redeterminations
Table 10—Percentage Difference in Wage Indexes for Areas That Qualify for a Wage Index Exception for Excluded Hospitals and Units

TABLE 1A—NATIONAL ADJUSTED OPERATING STANDARDIZED AMOUNTS, LABOR/NONLABOR

Large Urban		Other Urban		Rural	
Labor-related	Nonlabor-related	Labor-related	Nonlabor-related	Labor-related	Nonlabor-related
2,646.19	1,090.21	2,604.30	1,072.95	2,698.19	869.31

TABLE 1B—REGIONAL ADJUSTED OPERATING STANDARDIZED AMOUNTS, LABOR/NONLABOR

	Large Urban		Other Urban		Rural	
	Labor-related	Nonlabor-related	Labor-related	Nonlabor-related	Labor-related	Nonlabor-related
1. New England (CT, ME, MA, NH, RI, VT)	2,778.92	1,138.39	2,734.93	1,120.37	2,991.46	1,031.69
2. Middle Atlantic (PA, NJ, NY)	2,496.61	1,078.50	2,457.09	1,061.43	2,864.92	975.30
3. South Atlantic (DE, DC, FL, GA, MD, NC, SC, VA, WV)	2,665.05	995.33	2,622.86	979.58	2,738.74	845.71
4. East North Central (IL, IN, MI, OH, WI)	2,810.97	1,177.65	2,766.47	1,159.00	2,773.33	939.95
5. East South Central (AL, KY, MS, TN)	2,557.71	901.26	2,517.22	886.99	2,714.37	788.64
6. West North Central (IA, KS, MN, MO, NE, ND, SD)	2,665.81	1,073.03	2,623.60	1,056.05	2,638.17	842.55
7. West South Central (AR, LA, OK, TX)	2,650.47	988.59	2,608.51	972.95	2,530.11	774.85
8. Mountain (AZ, CO, ID, MT, NV, NM, UT, WY)	2,556.76	1,058.92	2,516.28	1,042.16	2,558.62	891.18
9. Pacific (AK, CA, HI, OR, WA)	2,487.02	1,209.59	2,447.65	1,190.44	2,488.47	1,003.96

TABLE 1C—ADJUSTED OPERATING STANDARDIZED AMOUNTS FOR PUERTO RICO, LABOR/NONLABOR

	Large Urban		Other Urban		Rural	
	Labor-related	Nonlabor-related	Labor-related	Nonlabor-related	Labor-related	Nonlabor-related
Puerto Rico	2,379.97	494.98	2,342.29	487.14	1,839.16	396.47
National	2,644.11	1,028.04				

TABLE 1D—CAPITAL STANDARD FEDERAL PAYMENT RATE

	Rate
National	378.34
Puerto Rico	291.03

TABLE 3C.—HOSPITAL CASE MIX INDEXES FOR DISCHARGES OCCURRING IN FEDERAL FISCAL YEAR 1992
PAGE 1 OF 17

Provider	Case mix	Provider	Case mix	Provider	Case mix	Provider	Case mix	Provider	Case mix
010001	01.3184	010094	01.2019	020024	01.0867	030091	01.0202	040081	00.9104
010004	01.0100	010095	01.0165	020025	00.9006	030092	01.4882	040082	01.3064
010005	01.1294	010096	00.8975	020026	01.1945	030093	01.3409	040084	01.1107
010006	01.3899	010097	00.9347	020027	00.9344	030094	01.3651	040085	01.2388
010007	01.0576	010098	01.0022	030001	01.3419	030095	01.2314	040088	01.2804
010008	01.0172	010099	01.0354	030002	01.7678	030898	00.7882	040090	00.9114
010009	01.0876	010100	01.1528	030003	01.3136	030899	00.8352	040091	01.2890
010010	01.1274	010101	01.0476	030004	00.9667	040001	01.0977	040093	01.0473
010011	01.4176	010102	00.9065	030006	01.6141	040002	01.2152	040095	00.8358
010012	01.2562	010103	01.6271	030007	01.2629	040003	01.0095	040100	01.1378
010015	01.0017	010104	01.5563	030008	01.9427	040004	01.2636	040105	00.9958
010016	01.1189	010108	01.2383	030009	01.1971	040005	01.0042	040106	01.1699
010018	00.8782	010109	01.0576	030010	01.4708	040007	01.5985	040107	01.0750
010019	01.1914	010110	00.9045	030011	01.4278	040008	01.2054	040109	01.0807
010020	00.9172	010112	01.1615	030012	01.2367	040010	01.1813	040114	01.7965
010021	01.2188	010113	01.6379	030013	01.2189	040011	00.9588	040116	01.3758
010022	00.9645	010114	01.2682	030014	01.4856	040013	00.9205	040118	01.2007
010023	01.3586	010115	00.8747	030016	01.2726	040014	01.2251	040119	01.1432
010024	01.2923	010117	01.0771	030017	01.3939	040015	01.1193	040124	01.1323
010025	01.2247	010118	01.2168	030018	01.7192	040016	01.5380	040126	00.9748
010027	00.8708	010119	01.1622	030019	01.2500	040017	01.2942	040133	00.8231
010029	01.5021	010120	00.9548	030022	01.5171	040018	01.3335	040898	00.8089
010031	01.2301	010121	01 1005	030023	01.2800	040019	01.1858	040899	00.8443
010032	00.8265	010122	00.9082	030024	01.6496	040020	01.4690	050002	01.3452
010033	01.9344	010123	01.2434	030025	01.1151	040021	01.2892	050006	01.3273
010034	01.0190	010124	01.2601	030027	01.0789	040022	01.7093	050007	01.5974
010035	01.1932	010125	01.0373	030030	01.6671	040024	01.0271	050008	01.4267
010036	01.1536	010126	01.1367	030033	01.2252	040025	00.9725	050009	01.5871
010038	01.2225	010127	01.5178	030034	01.1085	040026	01.5472	050013	02.1223
010039	01.6322	010128	00.8829	030035	01.2894	040027	01.2950	050014	01.1343
010040	01.3226	010129	01.0348	030036	01.2201	040028	00.9958	050015	01.4248
010043	00.9662	010130	01.1170	030037	01.9042	040029	01.1238	050016	01.1686
010044	01.0824	010131	01.2493	030038	01.5227	040030	00.8678	050017	01.9988
010045	01.0399	010134	00.7874	030040	00.9988	040031	00.9401	050018	01.4103
010046	01.3962	010136	01.0490	030041	00.9784	040032	00.9539	050019	00.8366
010047	00.8684	010137	01.2143	030043	01.2156	040035	00.9504	050021	01.2713
010049	01.0837	010138	00.9468	030044	01.0726	040036	01.3241	050022	01.4735
010050	00.9382	010139	01.6484	030046	01.0220	040037	01.1470	050024	01.3473
010051	00.8987	010143	01.1499	030047	01.0151	040039	01.1996	050025	01.6186
010052	00.9691	010144	01.3371	030049	01.0504	040040	01.0472	050026	01.4649
010053	01.0134	010145	01.2354	030054	00.8335	040041	01.1581	050028	01.2998
010054	01.2658	010146	01.0251	030055	01.2018	040042	01.2687	050029	01.2960
010055	01.3531	010148	00.9838	030059	01.3791	040044	00.9406	050030	01.3355
010056	01.3573	010149	01.3896	030060	01.0428	040045	00.9728	050032	01.2359
010058	00.9853	010150	01.0463	030061	01.5193	040047	01.0305	050033	01.4545
010059	01.0531	010152	01.2892	030062	01.3318	040048	01.1511	050036	01.6849
010061	00.9933	010153	02.1383	030064	01.4920	040050	01.1239	050038	01.3523
010062	00.9684	010155	01.0413	030065	01.4732	040051	01.0703	050039	01.6543
010064	01.6350	010898	00.7956	030067	01.0456	040053	01.1278	050040	01.2019
010065	01.2408	010899	00.9642	030068	01.0327	040054	00.9608	050041	01.2633
010066	00.8511	020001	01.4964	030069	01.3161	040055	01.4192	050042	01.2301
010068	01.2129	020002	01.0126	030071	00.9394	040058	01.0167	050043	01.5121
010069	01.1391	020004	01.1405	030072	00.8540	040060	00.9686	050045	01.2616
010072	01.1839	020005	00.9016	030073	01.0768	040062	01.4595	050046	01.1954
010073	00.9380	020006	01.1053	030074	00.8810	040063	01.4793	050047	01.7795
010078	01.2043	020007	00.8771	030075	00.9243	040064	00.9105	050051	01.0755
010079	01.1066	020008	00.9970	030076	01.0227	040066	01.1519	050052	00.8884
010080	01.0086	020009	00.9161	030077	00.9098	040067	01.0545	050053	01.3922
010081	01.8425	020010	00.9024	030078	01.0521	040069	01.0600	050054	01.3290
010083	01.0647	020011	00.9956	030079	00.8527	040070	00.9852	050055	01.2733
010084	01.2935	020012	01.1509	030080	01.6622	040071	01.4447	050056	01.3599
010085	01.2556	020013	01.0535	030083	01.4020	040072	01.0547	050057	01.4798
010086	01.0142	020014	01.0319	030084	01.0761	040074	01.2072	050058	01.3939
010087	01.7903	020017	01.4214	030085	01.4203	040075	01.1001	050060	01.5104
010089	01.1351	020018	00.9516	030086	01.1947	040076	01.1536	050061	01.3597
010090	01.5745	020019	00.8909	030087	01.6297	040077	00.9271	050063	01.4012
010091	00.9961	020020	00.7904	030088	01.3134	040078	01.2252	050065	01.5591
010092	01.3901	020021	00.8397	030089	01.3501	040080	01.0759	050066	01.2809

PAGE 2 OF 17

Provider	Case mix	Provider	Case mix	Provider	Case mix	Provider	Case mix	Provider	Case mix
050067	01.3386	050150	01.2357	050257	01.0623	050366	01.3484	050478	01.0043
050068	01.0342	050152	01.3914	050258	01.3158	050367	01.2610	050481	01.4948
050069	01.6767	050153	01.6461	050260	00.9921	050369	01.2606	050482	00.9882
050070	01.2582	050154	01.1832	050261	01.1558	050373	01.3506	050483	01.1561
050071	01.3090	050155	01.1296	050262	01.8002	050376	01.3760	050485	01.6688
050072	01.3123	050158	01.7111	050263	01.2223	050377	00.9205	050486	01.4781
050073	01.2608	050159	01.3080	050264	01.4274	050378	01.1243	050488	01.2123
050074	01.0574	050161	01.3486	050267	01.5351	050379	01.0728	050489	01.0203
050075	01.2905	050167	01.3664	050269	01.1050	050380	01.6118	050491	01.4273
050076	01.5470	050168	01.6690	050270	01.3201	050382	01.3933	050492	01.2630
050077	01.6412	050169	01.5602	050272	01.3950	050385	01.4299	050494	01.0494
050078	01.3689	050170	01.4664	050274	01.1312	050387	00.9659	050496	01.8218
050079	01.4813	050172	01.3533	050276	01.1097	050388	00.9362	050497	00.9107
050080	01.2882	050173	01.2867	050277	01.3786	050390	01.2833	050498	01.2607
050081	01.6031	050174	01.6974	050278	01.3852	050391	01.3797	050502	01.6793
050082	01.4397	050175	01.3192	050279	01.2394	050392	00.9456	050503	01.2712
050084	01.5551	050177	01.2482	050280	01.4330	050393	01.4892	050506	01.4949
050088	01.0966	050179	01.2505	050281	01.3630	050394	01.5033	050510	01.2901
050089	01.3485	050180	01.5103	050282	01.3818	050396	01.6092	050512	01.2641
050090	01.2767	050181	01.2525	050283	01.3640	050397	00.9120	050515	01.3312
050091	01.2599	050183	01.1984	050286	01.0394	050401	01.1810	050516	01.5631
050092	00.9144	050186	01.4137	050289	01.7308	050404	01.1358	050517	01.4177
050093	01.5391	050188	01.4154	050290	01.5587	050406	01.1016	050522	01.3809
050095	01.5486	050189	01.0085	050291	01.2048	050407	01.2638	050523	01.2380
050096	01.0386	050191	01.4014	050292	01.1322	050410	01.1185	050526	01.3120
050097	01.4466	050192	01.2034	050293	01.3196	050411	01.3164	050528	01.2839
050099	01.6847	050193	01.3288	050295	01.3620	050414	01.2747	050530	00.9260
050100	01.8603	050194	01.2519	050296	01.1616	050417	01.1989	050531	01.3260
050101	01.4067	050195	01.5799	050298	01.2230	050418	01.2687	050534	01.2825
050102	01.3321	050196	01.3426	050299	01.2845	050419	01.2708	050535	01.4484
050103	01.4286	050197	01.9071	050300	01.2917	050420	01.3886	050537	01.2438
050104	01.3441	050199	01.3350	050301	01.3217	050421	01.3516	050539	01.1919
050107	01.3391	050204	01.3997	050302	01.3826	050423	01.0125	050541	01.5332
050108	01.4358	050205	01.3610	050305	01.5241	050424	01.7277	050542	01.0835
050109	02.1526	050207	01.3267	050307	01.4950	050425	01.2745	050543	01.4038
050110	01.1689	050208	01.2986	050308	01.5558	050426	01.3971	050545	00.9657
050111	01.3533	050211	01.3337	050309	01.2797	050427	00.7685	050546	00.9134
050112	01.4679	050212	00.9062	050310	01.1819	050430	00.9946	050547	00.9787
050113	01.2124	050213	01.3383	050312	01.7946	050431	01.1102	050548	00.5777
050114	01.5016	050214	01.6064	050313	01.1421	050432	01.5648	050549	01.7935
050115	01.5351	050215	01.4198	050315	01.3064	050433	01.0039	050550	01.9174
050116	01.4455	050217	01.2689	050317	01.3692	050434	01.0708	050551	01.2708
050117	01.2965	050219	01.3323	050320	01.4180	050435	01.2406	050552	01.1046
050118	01.1522	050220	01.2933	050324	01.8454	050436	01.0099	050557	01.5234
050121	01.3299	050222	01.5650	050325	01.2400	050438	01.5579	050559	01.3108
050122	01.4894	050224	01.6121	050327	01.5917	050440	01.3409	050560	01.3584
050124	01.2008	050225	01.3770	050328	01.2804	050441	01.8279	050561	01.1847
050125	01.3317	050226	01.4215	050329	01.2201	050443	00.9113	050564	01.2646
050126	01.4286	050228	01.3313	050331	01.3474	050444	01.2625	050565	01.2564
050127	01.2761	050230	01.4152	050333	00.9740	050446	00.9452	050566	00.9890
050128	01.5715	050231	01.5123	050334	01.4973	050447	01.1833	050567	01.6773
050129	01.4671	050232	01.7969	050335	01.2708	050448	01.2407	050568	01.3608
050131	01.1487	050233	01.2258	050336	01.2953	050449	01.2521	050569	01.2322
050132	01.3647	050234	01.2612	050337	01.2805	050451	01.0487	050570	01.7107
050133	01.2283	050235	01.4684	050342	01.3218	050454	01.8497	050571	01.4579
050135	01.3263	050236	01.3959	050343	01.0649	050455	01.9525	050573	01.6481
050136	01.4045	050238	01.4758	050345	01.2944	050456	01.3118	050575	01.2296
050137	01.2337	050239	01.3911	050348	01.8379	050457	01.8740	050577	01.2485
050138	01.7985	050240	01.4753	050349	01.0010	050458	00.9751	050578	01.3345
050139	01.2226	050241	01.2715	050350	01.3761	050459	01.2591	050579	01.3975
050140	01.3264	050242	01.4078	050351	01.5125	050464	01.8174	050580	01.2564
050143	01.4244	050243	01.4789	050352	01.3039	050467	01.2809	050581	01.4198
050144	01.4794	050245	01.3554	050353	01.6376	050468	01.3851	050583	01.6814
050145	01.3446	050248	01.1131	050355	01.0194	050469	01.1028	050584	01.2212
050146	01.1689	050251	01.1663	050357	01.9078	050470	01.1335	050585	01.3658
050147	00.7313	050253	00.9050	050359	01.1061	050471	01.7972	050586	01.2399
050148	01.1350	050254	01.1634	050360	01.4885	050476	01.2583	050587	01.3447
050149	01.3725	050256	01.7668	050363	01.3622	050477	01.3970	050588	01.3773

PAGE 3 OF 17

Provider	Case mix	Provider	Case mix	Provider	Case mix	Provider	Case mix	Provider	Case mix
050589	01.2704	050898	00.7857	060104	01.2926	100014	01.2734	100092	01.5123
050590	01.3103	050899	00.8627	070001	01.7615	100015	01.3747	100093	01.4953
050591	01.1728	060001	01.5384	070002	01.8441	100016	01.0243	100098	01.2265
050592	01.3361	060003	01.2037	070003	01.1416	100017	01.6273	100099	01.2422
050593	01.3040	060004	01.2148	070004	01.1172	100018	01.3396	100100	01.3550
050594	01.8694	060006	01.2350	070005	01.3122	100019	01.5091	100102	01.1492
050597	01.3160	060007	01.1388	070006	01.2731	100020	01.2406	100103	00.9786
050598	01.3941	060008	01.0563	070007	01.3913	100022	01.6453	100105	01.4238
050599	01.6112	060009	01.4008	070008	01.2475	100023	01.2953	100106	01.1019
050601	01.3624	060010	01.5628	070009	01.2164	100024	01.3305	100107	01.2699
050603	01.4194	060011	01.1675	070010	01.4900	100025	01.5507	100108	01.1455
050604	01.4453	060012	01.4349	070011	01.2235	100026	01.5313	100109	01.2344
050607	01.1772	060013	01.1839	070012	01.2399	100027	00.8642	100110	01.4577
050608	01.1695	060014	01.6742	070013	01.3956	100028	01.2954	100112	01.0045
050609	01.3784	060015	01.5192	070015	01.2809	100029	01.4370	100113	01.9932
050613	01.0892	060016	01.1867	070016	01.2818	100030	01.2534	100114	01.4716
050615	01.3185	060018	01.2613	070017	01.3195	100032	01.8892	100117	01.3899
050616	01.3312	060020	01.4945	070018	01.3446	100034	01.6551	100118	01.1957
050618	01.2082	060022	01.6559	070019	01.1532	100035	01.5071	100121	01.1711
050619	01.3352	060023	01.4919	070020	01.4167	100038	01.6672	100122	01.3935
050622	01.2085	060024	01.6154	070021	01.2521	100039	01.6679	100124	01.3305
050623	01.4671	060026	01.4479	070022	01.6885	100040	01.6824	100125	01.1781
050624	01.2641	060027	01.4245	070023	01.2967	100042	01.1758	100126	01.5119
050625	01.5155	060028	01.4032	070024	01.2801	100043	01.4285	100127	01.6064
050630	01.2180	060029	01.0222	070025	01.7282	100044	01.3964	100128	02.2290
050633	01.1649	060030	01.4140	070026	01.1828	100045	01.4067	100129	01.3371
050635	01.3118	060031	01.5252	070027	01.2810	100046	01.3129	100130	01.1685
050636	01.3598	060032	01.3857	070028	01.5078	100047	01.6205	100131	01.2565
050637	01.1831	060033	01.1693	070029	01.2214	100048	01.0245	100132	01.3585
050638	00.9402	060034	01.3650	070030	01.2393	100049	01.3530	100134	01.0247
050641	01.1258	060036	01.1776	070031	01.2844	100050	01.2269	100135	01.5274
050643	00.9296	060037	00.9889	070033	01.3666	100051	01.3305	100137	01.1574
050644	01.0685	060038	01.0653	070034	01.3058	100052	01.3031	100138	01.0059
050655	00.8780	060041	01.0717	070035	01.3592	100053	01.2647	100139	01.0366
050660	01.0771	060042	00.9868	070036	01.2815	100054	01.2538	100140	01.1062
050661	00.9004	060043	00.9201	070898	00.7953	100055	01.3586	100142	01.1247
050662	00.8410	060044	01.1633	070899	00.8437	100056	01.5273	100143	01.2191
050663	01.0600	060046	01.0253	080001	01.6213	100057	01.2966	100144	01.2152
050666	00.8646	060047	00.8943	080002	01.1675	100059	01.5240	100145	01.3484
050667	00.9996	060049	01.0599	080003	01.2763	100060	01.8043	100146	01.1024
050668	01.1774	060050	01.2530	080004	01.2756	100061	01.5119	100147	01.1151
050670	00.8312	060052	01.0204	080005	01.3027	100062	01.7528	100150	01.3634
050671	01.1320	060053	01.1352	080006	01.1535	100063	01.2470	100151	01.7970
050672	00.6540	060054	01.2160	080007	01.2702	100065	01.1231	100152	01.4402
050674	01.1751	060056	00.9271	080898	00.7998	100067	01.4028	100154	01.6110
050675	01.5339	060057	01.1409	080899	00.9119	100068	01.5091	100156	01.1263
050676	00.8456	060058	00.8298	090001	01.4469	100069	01.4103	100157	01.5639
050677	01.3436	060060	00.9939	090002	01.2659	100070	01.3653	100159	01.0219
050678	01.1145	060062	00.9434	090003	01.3988	100071	01.3472	100160	01.2225
050680	01.3434	060063	01.0813	090004	01.5734	100072	01.3055	100161	01.5011
050682	00.8933	060064	01.4053	090005	01.2905	100073	01.7987	100162	01.3597
050684	01.2259	060065	01.3399	090006	01.3004	100074	01.3258	100164	00.9560
050685	01.1349	060066	01.0240	090007	01.2764	100075	01.7025	100165	00.9377
050686	01.2700	060068	01.2254	090008	01.4387	100076	01.4665	100166	01.4452
050688	01.1824	060070	01.0031	090010	00.9912	100077	01.2940	100167	01.4203
050689	01.4767	060071	01.1781	090011	01.8896	100078	01.2564	100168	01.2849
050690	01.1993	060072	00.9189	090898	00.7823	100079	00.9314	100169	01.8514
050693	01.3064	060073	00.9769	090899	00.8432	100080	01.6109	100170	01.4949
050694	01.1653	060075	01.2572	100001	01.4451	100081	01.0834	100172	01.2933
050695	01.1759	060076	01.3939	100002	01.3953	100082	01.4229	100173	01.6317
050696	01.8238	060085	00.9443	100004	01.0098	100083	01.3016	100174	01.3773
050697	01.3528	060087	01.5402	100005	00.9952	100084	01.4246	100175	00.9897
050698	01.1722	060088	01.0322	100006	01.5798	100085	01.3219	100176	01.9904
050699	00.9809	060090	00.8479	100007	01.9250	100086	01.3392	100177	01.3345
050700	01.4069	060096	00.9776	100008	01.7229	100087	01.7834	100179	01.6789
050701	01.1869	060100	01.3315	100009	01.4716	100088	01.6103	100180	01.4079
050702	00.9099	060101	01.4883	100010	01.3897	100089	01.2782	100181	01.3403
050703	00.7898	060103	01.3310	100012	01.5401	100090	01.3555	100183	01.3759

PAGE 4 OF 17

Provider	Case mix	Provider	Case mix	Provider	Case mix	Provider	Case mix	Provider	Case mix
100185	01.1917	100275	01.3581	110071	00.9926	110163	01.3764	130010	00.9366
100186	01.3608	100276	01.3077	110072	00.9783	110164	01.3422	130011	01.3437
100187	01.3712	100277	00.9711	110073	01.2091	110165	01.2575	130012	01.0276
100189	01.2648	100278	00.9765	110074	01.3015	110166	01.4286	130013	01.2506
100191	01.3345	100279	01.3206	110075	01.2150	110168	01.6087	130014	01.2761
100194	01.2380	100280	01.4681	110076	01.3465	110169	00.7689	130015	01.0052
100196	01.2199	100281	01.1961	110078	01.5697	110171	01.3111	130016	00.8340
100199	01.2463	100898	00.7489	110079	01.3576	110172	01.2436	130017	01.0018
100200	01.3067	100899	00.8338	110080	01.1099	110174	01.0489	130018	01.5352
100203	01.2076	110001	01.1870	110082	02.1230	110176	01.1042	130019	01.2157
100204	01.5996	110002	01.2009	110083	01.6058	110177	01.3838	130021	00.8411
100206	01.4123	110003	01.3242	110085	01.1590	110178	01.2337	130022	01.1858
100207	01.4871	110004	01.1884	110086	01.0327	110179	01.1575	130024	01.1002
100208	01.5534	110005	01.3383	110087	01.2556	110181	00.9830	130025	01.0746
100209	01.5476	110006	01.2542	110088	00.8800	110183	01.3255	130026	01.0936
100210	01.7271	110007	01.4327	110089	01.2087	110184	01.1842	130027	00.8838
100211	01.3226	110008	01.1462	110091	01.3426	110185	01.1117	130028	01.2364
100212	01.7281	110009	01.0429	110092	01.0644	110186	01.2668	130029	01.0448
100213	01.6057	110010	02.0158	110093	00.9112	110187	01.1687	130030	01.0804
100217	01.2127	110011	01.1263	110094	01.0707	110188	01.3472	130031	00.9469
100218	00.9074	110013	01.0365	110095	01.2877	110189	01.0591	130034	00.9860
100219	01.5459	110014	01.0599	110096	01.1009	110190	01.1706	130035	00.9442
100220	01.8088	110015	01.0762	110097	01.0691	110191	01.2990	130036	01.2040
100221	01.5296	110016	01.2105	110098	00.9383	110192	01.3193	130037	01.1637
100222	01.2406	110017	00.9898	110100	01.0825	110193	01.2273	130039	01.3255
100223	01.4153	110018	01.1653	110101	01.0411	110194	00.9896	130040	00.8685
100224	01.4147	110020	01.2500	110103	00.9065	110195	01.1546	130043	01.0175
100225	01.2724	110023	01.1868	110104	01.1553	110198	01.3523	130044	00.8825
100226	01.3738	110024	01.3429	110105	01.1538	110200	01.9651	130045	00.9074
100227	01.0125	110025	01.2842	110107	01.6337	110201	01.3426	130048	01.0678
100228	01.2566	110026	01.1129	110108	00.8981	110203	00.9964	130049	01.2237
100229	01.3876	110027	01.0406	110109	01.0594	110204	00.6703	130054	01.0264
100230	01.3150	110028	01.6027	110111	01.1345	110205	01.0523	130056	00.9922
100231	01.7472	110029	01.2812	110112	01.0627	110207	01.1849	130058	00.9742
100232	01.3229	110030	01.2519	110113	01.0078	110208	01.0370	130060	01.0969
100234	01.3693	110031	01.2816	110114	01.1175	110898	00.8005	140001	01.2881
100235	01.3634	110032	01.1050	110115	01.7132	110899	00.8561	140002	01.2104
100236	01.3895	110033	01.3586	110117	01.0744	120001	01.7206	140003	01.0116
100237	02.1907	110034	01.4702	110118	01.0360	120002	01.1992	140004	00.9798
100238	01.4000	110035	01.3279	110120	01.0628	120003	01.0415	140005	00.9090
100239	01.4538	110036	01.6956	110121	01.1209	120004	01.2506	140007	01.4136
100240	00.8015	110037	01.0422	110122	01.3072	120005	01.2633	140008	01.3816
100241	00.9631	110038	01.3638	110124	01.0421	120006	01.1612	140010	01.3357
100242	01.3300	110039	01.3357	110125	01.1494	120007	01.5790	140011	01.0808
100243	01.4500	110040	01.0248	110127	00.8814	120009	00.8847	140012	01.2507
100244	01.3581	110041	01.0552	110128	01.1658	120010	01.6719	140013	01.5485
100246	01.3645	110042	01.0143	110129	01.6300	120011	01.2336	140014	01.1193
100248	01.6333	110043	01.5553	110130	01.0611	120012	00.9620	140015	01.2336
100249	01.2764	110044	01.1486	110132	01.1594	120014	01.1722	140016	00.9761
100252	01.2449	110045	01.0795	110134	00.8486	120015	01.0773	140018	01.5374
100253	01.3994	110046	01.2018	110135	01.0876	120016	00.9497	140019	00.9010
100254	01.6195	110048	01.1257	110136	01.2594	120018	00.9628	140024	01.0258
100255	01.3472	110049	01.0687	110140	00.9063	120019	01.1765	140025	01.1395
100256	01.9104	110050	01.0426	110141	00.9400	120021	00.9054	140026	01.1307
100258	01.7024	110051	00.9886	110142	01.0793	120022	01.5949	140027	01.0916
100259	01.4506	110052	00.9172	110143	01.2751	120024	01.0500	140029	01.3876
100260	01.3692	110054	01.2474	110144	01.1862	120026	01.2577	140030	01.5315
100262	01.3940	110055	00.9155	110146	00.9428	120027	01.4508	140031	01.0430
100263	01.4268	110056	00.9240	110149	01.1723	120898	00.7956	140032	01.2801
100264	01.4229	110059	01.2243	110150	01.3029	120899	00.8443	140033	01.2112
100265	01.2972	110061	01.0094	110152	01.0540	130001	00.9616	140034	01.1153
100266	01.3607	110062	00.9303	110153	01.0737	130002	01.3758	140035	01.0631
100267	01.3265	110063	01.0152	110154	00.9507	130003	01.1791	140036	01.1407
100268	01.2223	110064	01.2793	110155	01.0733	130005	01.3996	140037	01.0028
100269	01.3948	110065	00.9597	110156	00.9038	130006	01.7350	140038	01.1462
100270	00.8875	110066	01.3219	110157	01.1366	130007	01.4741	140039	01.0104
100271	01.5611	110069	01.1856	110161	01.2699	130008	01.0129	140040	01.2486
100273	01.1541	110070	00.9882	110162	00.8412	130009	00.9906	140041	01.1074

PAGE 5 OF 17

Provider	Case mix	Provider	Case mix	Provider	Case mix	Provider	Case mix	Provider	Case mix
140042	01.0555	140128	01.1292	140218	00.9388	150033	01.5815	150112	01.1899
140043	01.2600	140129	01.0685	140220	01.1145	150034	01.2907	150113	01.1860
140045	00.9909	140130	01.1816	140223	01.5364	150035	01.3888	150114	01.0467
140046	01.2236	140132	01.5118	140224	01.3325	150036	01.0380	150115	01.3165
140047	01.0776	140133	01.3405	140228	01.4852	150037	01.2339	150122	01.0958
140048	01.1985	140135	01.2127	140229	00.9243	150038	01.2084	150123	00.9635
140049	01.3183	140137	01.0424	140230	00.9204	150039	00.9607	150124	01.1736
140051	01.3263	140138	01.0584	140231	01.5809	150042	01.2057	150125	01.4058
140052	01.2625	140139	01.0816	140233	01.6444	150043	01.0809	150126	01.5333
140053	01.7779	140140	01.0136	140234	01.1720	150044	01.2773	150127	01.0869
140054	01.3456	140141	01.0139	140236	01.0061	150045	01.1658	150128	01.1775
140055	00.9578	140143	01.0741	140239	01.5976	150046	01.5287	150129	01.2536
140058	01.1500	140144	01.0585	140240	01.3831	150047	01.6730	150130	01.1102
140059	01.0771	140145	01.0854	140242	01.5294	150048	01.1644	150132	01.3335
140061	01.1115	140146	01.0007	140245	01.0076	150049	01.1229	150133	01.1929
140062	01.2557	140147	01.1972	140246	01.0681	150050	01.1511	150134	01.1968
140063	01.3558	140148	01.6324	140250	01.2161	150051	01.2641	150135	00.9424
140064	01.2160	140150	01.3688	140251	01.3638	150052	01.0089	150136	00.9042
140065	01.4120	140151	01.1742	140252	01.3320	150053	01.0360	150898	00.7956
140066	01.2313	140152	01.1050	140253	01.1988	150054	01.1531	150899	00.8299
140067	01.7615	140155	01.2094	140258	01.4277	150056	01.6772	160001	01.1698
140068	01.3111	140158	01.3701	140271	01.0755	150057	02.2621	160002	01.2932
140069	01.0665	140159	01.1906	140275	01.2158	150058	01.5582	160003	01.0531
140070	01.2754	140160	01.1576	140276	02.0132	150059	01.1761	160005	01.0229
140074	01.1019	140161	01.1207	140280	01.2224	150060	01.1979	160007	01.0108
140075	01.3958	140162	01.6977	140281	01.5539	150061	01.2052	160008	01.1228
140077	01.0925	140164	01.2260	140285	01.3296	150062	01.0079	160009	01.2713
140079	01.2899	140165	01.1101	140286	01.1485	150063	01.1408	160012	01.1431
140080	01.8717	140166	01.2075	140288	01.5690	150064	01.0564	160013	01.2761
140081	01.2015	140167	01.1395	140289	01.2636	150065	01.1121	160014	00.9350
140082	01.2912	140168	01.1588	140290	01.3937	150066	01.0948	160016	01.2580
140083	01.2751	140170	00.9390	140291	01.2585	150067	01.0918	160018	00.9798
140084	01.2148	140171	00.9890	140292	01.2268	150069	01.2451	160020	01.0971
140086	01.1244	140172	01.5077	140294	01.1224	150070	01.0727	160021	01.1460
140087	01.4647	140173	01.0640	140297	01.4071	150071	01.0996	160023	01.0930
140088	01.4536	140174	01.4067	140299	00.9685	150072	01.3248	160024	01.5108
140089	01.2385	140176	01.2290	140898	00.7956	150073	01.0419	160025	01.8985
140090	01.3546	140177	01.3330	140899	00.8611	150074	01.5012	160026	01.0955
140091	01.6055	140179	01.2684	150001	01.0650	150075	01.2057	160027	01.1460
140093	01.2125	140180	01.3774	150002	01.4082	150076	01.1077	160028	01.2290
140094	01.2395	140181	01.3109	150003	01.6496	150077	01.2717	160029	01.4331
140095	01.2232	140182	01.3197	150004	01.4324	150078	01.0110	160030	01.3029
140097	00.9461	140184	01.1563	150005	01.1864	150079	01.1320	160031	01.0647
140098	01.3201	140185	01.3787	150006	01.2114	150082	01.4294	160032	01.1426
140100	01.2948	140186	01.2385	150007	01.2292	150084	01.8247	160033	01.3952
140101	01.1288	140187	01.3783	150008	01.3616	150085	00.9809	160034	00.9804
140102	01.0246	140188	00.9931	150009	01.2963	150086	01.1974	160035	00.9518
140103	01.3736	140189	01.1426	150010	01.2149	150088	01.1569	160036	01.0332
140105	01.3065	140190	01.1429	150011	01.2691	150089	01.3379	160037	01.1005
140107	01.0721	140191	01.3967	150012	01.6180	150090	01.2977	160039	01.0243
140108	01.1799	140192	00.9878	150013	01.2585	150091	01.1838	160040	01.2668
140109	01.1235	140193	00.9818	150014	01.4062	150092	01.0270	160041	01.1346
140110	01.3201	140197	01.2025	150015	01.2318	150094	00.9883	160043	01.0374
140112	01.0858	140199	01.0089	150017	01.7326	150095	01.0158	160044	01.2980
140113	01.4567	140200	01.4307	150018	01.2672	150096	01.0444	160045	01.6632
140114	01.3061	140202	01.2819	150019	01.0953	150097	01.0792	160046	01.0322
140115	01.2403	140203	01.2399	150020	01.1000	150098	01.0942	160047	01.3978
140116	01.3284	140205	00.9386	150021	01.6790	150099	01.2483	160048	01.1135
140117	01.2740	140206	01.0982	150022	01.1624	150100	01.6634	160049	00.9855
140118	01.5415	140207	01.4205	150023	01.3918	150101	01.0952	160050	01.0091
140119	01.6263	140208	01.4687	150024	01.2278	150102	01.0516	160051	01.1540
140120	01.2653	140209	01.6560	150025	01.5480	150103	01.0696	160052	00.9525
140121	01.1880	140210	01.0299	150026	01.2126	150104	01.1871	160054	01.0488
140122	01.4272	140211	01.1823	150027	01.0162	150105	01.1646	160055	00.9854
140123	01.2227	140212	01.1898	150029	01.2371	150106	01.0681	160056	01.0439
140124	01.1711	140213	01.2142	150030	01.0924	150109	01.2696	160057	01.3606
140125	01.2340	140215	01.0844	150031	01.0053	150110	00.8958	160058	01.7011
140127	01.2865	140217	01.2390	150032	01.7097	150111	01.1076	160059	01.2844

PAGE 6 OF 17

Provider	Case mix	Provider	Case mix	Provider	Case mix	Provider	Case mix	Provider	Case mix
160060	01.0705	160143	01.1082	170074	01.0884	170172	00.9652	180072	01.0290
160061	00.9977	160145	01.0226	170075	00.8727	170173	00.7621	180075	00.9867
160062	01.0277	160146	01.3641	170076	01.0852	170174	00.8708	180078	01.0991
160063	01.0834	160147	01.1697	170077	00.9084	170175	01.2330	180079	00.9998
160064	01.5602	160151	01.1133	170079	00.9336	170176	01.4589	180080	01.1322
160065	01.0618	160152	00.9792	170080	01.0055	170898	00.7570	180081	01.4759
160066	01.1195	160153	01.6465	170081	01.0530	170899	00.8231	180085	01.3187
160067	01.2953	160898	00.8503	170082	00.9175	180001	01.1934	180087	01.0532
160068	01.0509	160899	00.8432	170084	00.9059	180002	01.1222	180088	01.6640
160069	01.3733	170001	01.1982	170085	00.9192	180004	01.1533	180092	01.1942
160070	01.0798	170004	01.0328	170086	01.6149	180005	01.0385	180093	01.3979
160071	01.0613	170006	01.2112	170087	01.3512	180006	00.9320	180094	01.0021
160072	01.0498	170008	01.0555	170088	00.8922	180007	01.4445	180095	01.0098
160073	00.9685	170009	01.1190	170089	00.9925	180009	01.2122	180099	01.0550
160074	01.0256	170010	01.2010	170090	00.9598	180010	01.8107	180101	01.2918
160075	01.1227	170011	01.4483	170092	00.8236	180011	01.1640	180102	01.4425
160076	01.0156	170012	01.4332	170093	00.9628	180012	01.2925	180103	01.9068
160077	01.0707	170013	01.2614	170094	01.1058	180013	01.3236	180104	01.4002
160079	01.3353	170014	01.0814	170095	01.1731	180014	01.5306	180105	00.9435
160080	01.1651	170015	00.9876	170097	00.9250	180015	01.1188	180106	00.8986
160081	01.0777	170016	01.5478	170098	01.1049	180016	01.2298	180108	00.9259
160082	01.7412	170017	01.2237	170099	01.3912	180017	01.2830	180115	00.9988
160083	01.5186	170018	01.0165	170100	00.8924	180018	01.1993	180116	01.3753
160085	01.2509	170019	01.1659	170101	01.0571	180019	01.2331	180117	01.1000
160086	00.9718	170020	01.2218	170102	00.9710	180020	01.0739	180118	00.9703
160088	01.0775	170022	01.2045	170103	01.2236	180021	01.0174	180120	00.8976
160089	01.1913	170023	01.3620	170104	01.4312	180023	00.8687	180121	01.1101
160090	01.0295	170024	01.2065	170105	01.0131	180024	01.3355	180122	00.9955
160091	01.1145	170025	01.2557	170106	00.9255	180025	01.1484	180123	01.4404
160092	00.9348	170026	01.0475	170108	00.8286	180026	01.1752	180124	01.3229
160093	01.1418	170027	01.2217	170109	01.0735	180027	01.1968	180125	01.0359
160094	01.1542	170030	00.9290	170110	00.9268	180028	01.0245	180126	00.9863
160095	01.0658	170031	00.8815	170112	00.9407	180029	01.3234	180127	01.2371
160097	01.1452	170032	01.0299	170113	01.0400	180030	01.1903	180128	01.1465
160098	01.0204	170033	01.2565	170114	01.0594	180031	01.0314	180129	01.1007
160099	01.0895	170034	00.9776	170115	00.9990	180032	01.0305	180130	01.3551
160101	01.1072	170035	00.9468	170116	01.1105	180033	01.0505	180132	01.2452
160102	01.4165	170036	00.8852	170117	00.9479	180034	00.9856	180133	01.2313
160103	00.9720	170037	01.0735	170119	01.0287	180035	01.4652	180134	01.0232
160104	01.1933	170038	00.8888	170120	01.3406	180036	01.1032	180136	01.3530
160106	01.0641	170039	01.0256	170121	00.8749	180037	01.2775	180137	01.7720
160107	01.1598	170040	01.4194	170122	01.8176	180038	01.3397	180138	01.2432
160108	01.0811	170041	01.0305	170123	01.6793	180040	01.9924	180139	01.0617
160109	00.9347	170043	01.0236	170124	00.9840	180041	01.0588	180898	00.7869
160110	01.5186	170044	01.1241	170126	00.9081	180042	01.1098	180899	00.8443
160111	01.0672	170045	01.0367	170128	00.9968	180043	01.1139	190001	00.9386
160112	01.3828	170049	01.2919	170131	01.2200	180044	01.0898	190002	01.5769
160113	01.0037	170050	00.9569	170133	01.1145	180045	01.1812	190003	01.3510
160114	00.9536	170051	00.9763	170134	00.9336	180046	01.1281	190004	01.2830
160115	01.0491	170052	01.0489	170137	01.1493	180047	01.1191	190005	01.3542
160116	01.2630	170053	00.8892	170139	01.0089	180048	01.1842	190006	01.1111
160117	01.3369	170054	01.0773	170140	01.0980	180049	01.3375	190007	01.0783
160118	00.9907	170055	01.0494	170142	01.3506	180050	01.3396	190008	01.5153
160120	00.9600	170056	00.9873	170143	01.1636	180051	01.1413	190009	01.1163
160122	01.2022	170057	00.9977	170144	01.4409	180053	01.2239	190010	00.9328
160123	01.1476	170058	01.0889	170145	01.2114	180054	01.0399	190011	01.1135
160124	01.1324	170060	01.0480	170146	01.3093	180055	01.0749	190013	01.2313
160126	01.1917	170061	01.1666	170147	01.1682	180056	01.0550	190014	01.0844
160129	01.0782	170062	00.9271	170148	01.3322	180058	00.8997	190015	01.1949
160130	01.1101	170063	00.8363	170150	01.0984	180059	00.9319	190017	01.2106
160131	01.1679	170064	01.1082	170151	01.0407	180060	00.8735	190018	01.2074
160133	01.1717	170066	00.8849	170152	01.0120	180063	01.0589	190019	01.4507
160134	00.9620	170067	00.9909	170159	01.0763	180064	01.1404	190020	01.1812
160135	00.9799	170068	01.2842	170160	00.9317	180065	00.9817	190025	01.2587
160138	01.1056	170069	00.9750	170164	01.0581	180066	01.2535	190026	01.3652
160140	01.0661	170070	00.9897	170166	01.0034	180067	01.8256	190027	01.4261
160141	00.8460	170072	00.9371	170168	00.8510	180069	01.1604	190029	01.2638
160142	01.0971	170073	01.0654	170171	01.2075	180070	01.0745	190033	00.9438

PAGE 7 OF 17

Provider	Case mix	Provider	Case mix	Provider	Case mix	Provider	Case mix	Provider	Case mix
190034	01.2179	190148	00.9593	200025	01.1679	210055	01.2270	220084	01.2091
190035	01.4124	190149	00.9697	200026	00.9999	210056	01.3927	220086	01.5838
190036	01.6955	190151	01.0761	200027	01.1783	210057	01.2429	220088	01.4920
190037	01.0166	190152	01.3672	200028	01.0065	210058	01.8423	220089	01.3108
190039	01.4480	190155	00.9543	200031	01.2723	210059	01.3072	220090	01.2056
190040	01.3858	190156	00.8564	200032	01.2903	210060	01.1020	220092	01.1762
190041	01.5578	190158	01.2649	200033	01.6941	210898	00.7390	220094	01.2573
190043	01.1260	190160	01.1360	200034	01.1863	210899	00.9480	220095	01.2020
190044	01.1025	190161	00.8949	200037	01.1658	220001	01.1962	220097	01.0307
190045	01.2825	190162	01.2000	200038	01.0122	220002	01.3684	220098	01.2621
190046	01.4691	190164	01.1444	200039	01.2858	220003	01.1408	220099	01.1061
190047	01.0713	190165	01.0611	200040	01.0306	220004	01.2407	220100	01.2242
190048	01.0784	190166	01.0572	200041	01.1391	220006	01.3116	220101	01.3751
190049	01.0177	190167	01.2633	200043	00.6909	220008	01.1819	220102	00.7578
190050	01.0740	190170	01.0121	200050	01.1536	220010	01.1367	220104	01.1867
190053	01.0898	190173	01.4173	200051	01.0023	220011	01.1606	220105	01.1469
190054	01.3100	190175	01.8346	200052	01.0635	220012	01.1983	220106	01.1159
190059	00.9326	190176	01.4895	200055	01.0977	220015	01.2049	220107	01.1527
190060	01.3455	190177	01.4578	200062	00.9518	220016	01.2109	220108	01.1351
190064	01.4881	190178	01.0041	200063	01.2137	220017	01.2647	220110	01.9375
190065	01.4944	190182	01.0674	200066	01.2106	220019	01.0964	220111	01.1581
190071	00.9013	190183	01.1597	200898	00.7832	220020	01.1609	220114	01.0586
190075	01.4157	190184	00.9418	200899	00.8443	220021	01.2594	220115	00.7331
190077	00.8724	190185	01.2092	210001	01.3079	220023	01.1870	220116	01.8280
190078	01.1310	190186	00.8759	210002	01.9364	220024	01.1977	220118	01.9757
190079	01.2423	190187	00.8798	210003	01.4562	220025	01.1120	220119	01.3092
190081	00.9097	190189	00.5025	210004	01.3089	220026	01.3553	220120	01.0360
190083	01.0021	190190	00.9680	210005	01.2097	220028	01.3947	220123	00.9783
190086	01.3062	190191	01.2507	210006	01.1451	220029	01.1617	220126	01.2491
190088	01.3407	190193	01.2359	210007	01.4925	220030	01.1338	220128	01.0921
190089	01.0772	190194	01.2312	210008	01.3136	220031	01.6837	220131	01.1019
190090	01.1914	190196	00.8919	210009	01.7598	220033	01.2800	220133	00.8199
190092	01.2884	190197	01.2411	210010	01.1807	220035	01.2167	220135	01.1399
190095	01.0672	190198	01.1420	210011	01.2805	220036	01.5021	220153	01.0045
190098	01.4567	190199	01.1854	210012	01.6066	220038	01.2435	220154	00.9300
190099	01.1682	190200	01.5245	210013	01.3203	220041	01.1597	220156	01.2604
190102	01.5030	190201	01.3007	210015	01.1941	220042	01.1438	220162	01.3364
190103	00.9066	190202	01.4335	210016	01.9038	220045	01.2738	220163	01.8768
190106	01.1187	190203	01.5699	210017	01.0945	220046	01.3840	220171	01.6570
190109	01.1102	190204	01.5142	210018	01.2570	220048	01.2187	220173	00.5499
190110	00.9479	190205	01.5683	210019	01.4089	220049	01.2561	220897	05.1516
190111	01.5384	190206	01.4212	210022	01.3711	220050	00.9808	220898	00.8024
190112	01.2784	190207	01.2149	210023	01.3058	220051	01.1404	220899	00.8315
190113	01.2964	190208	00.8595	210024	01.2984	220052	01.2460	230001	01.1302
190114	00.9675	190211	00.6135	210025	01.2972	220053	01.2595	230002	01.2718
190115	01.3146	190212	00.9044	210026	01.3267	220055	01.1914	230003	01.2055
190116	01.2081	190213	00.9668	210027	01.2201	220057	01.2397	230004	01.6733
190118	01.0448	190214	00.8187	210028	01.0765	220058	01.0325	230005	01.2748
190120	00.9397	190215	03.6094	210029	01.3649	220060	01.1334	230006	01.0692
190122	01.2435	190216	00.8091	210030	01.0564	220062	00.8562	230007	01.0971
190124	01.4418	200001	01.2745	210031	01.7864	220063	01.1494	230012	00.9196
190125	01.3794	200002	01.0960	210032	01.2291	220064	01.1862	230013	01.2543
190127	01.4443	200003	01.1124	210033	01.1261	220065	01.2213	230014	01.1529
190128	00.8919	200006	01.1327	210034	01.2173	220066	01.2972	230015	01.3311
190130	00.9670	200007	01.0809	210035	01.1482	220067	01.2764	230017	01.5403
190131	01.2170	200008	01.2441	210036	01.2625	220068	00.6167	230019	01.5651
190132	01.1206	200009	01.7055	210037	01.2211	220070	01.1345	230020	01.6375
190133	00.9796	200012	01.1198	210038	01.3842	220071	01.8403	230021	01.5935
190134	00.9951	200013	01.0874	210039	01.2267	220073	01.2327	230022	01.2579
190135	01.3375	200015	01.2473	210040	01.3417	220074	01.2249	230024	01.5191
190136	01.0383	200016	01.0123	210043	01.2496	220075	00.8092	230027	01.0670
190138	00.7000	200017	01.2729	210044	01.2145	220076	01.2257	230029	01.5022
190140	01.0688	200018	01.1512	210045	01.0035	220077	01.6797	230030	01.2533
190142	01.0096	200019	01.2509	210046	01.1112	220079	01.1293	230031	01.4339
190144	01.1025	200020	01.0966	210048	01.1824	220080	01.1756	230032	01.7505
190145	00.9556	200021	01.1731	210049	01.1477	220081	01.0341	230034	01.1705
190146	01.5216	200023	00.8329	210051	01.3056	220082	01.2350	230035	01.1417
190147	00.9867	200024	01.2114	210054	01.2408	220083	01.1502	230036	01.2907

PAGE 8 OF 17

Provider	Case mix	Provider	Case mix	Provider	Case mix	Provider	Case mix	Provider	Case mix
230037	01.1444	230133	01.1640	230253	01.0816	240072	01.0026	240153	01.0352
230038	01.6187	230134	01.2405	230254	01.2636	240073	00.9865	240154	00.9451
230040	01.2889	230135	01.2813	230257	01.1612	240075	01.2174	240155	00.9516
230041	01.1898	230137	01.1530	230259	01.0979	240076	01.1525	240157	01.0623
230042	01.1365	230138	00.8798	230264	01.2197	240077	00.9183	240160	00.9710
230043	00.6022	230141	01.5947	230266	01.1682	240078	01.4028	240161	00.9439
230046	01.8281	230142	01.1889	230269	01.2341	240079	01.1045	240162	01.0509
230047	01.2644	230143	01.2601	230270	01.2746	240080	01.4010	240163	00.9156
230053	01.4459	230144	01.2190	230273	01.5598	240082	01.1735	240166	01.0994
230054	01.6900	230145	01.1540	230275	00.9816	240083	01.3385	240169	01.0036
230055	01.1974	230146	01.2745	230276	01.0800	240084	01.3539	240170	01.0627
230056	00.9377	230147	01.5056	230277	01.1995	240085	00.8658	240171	01.0024
230058	01.1228	230149	01.2042	230278	00.9707	240086	01.1494	240172	01.1128
230059	01.4805	230150	01.3423	230898	00.8027	240087	01.1194	240173	01.0071
230060	01.1303	230151	01.4043	230899	00.8546	240088	01.4581	240175	00.8588
230062	01.1123	230153	01.0842	240001	01.5591	240089	01.1182	240176	00.9598
230063	01.2824	230154	01.0493	240002	01.6629	240090	01.0191	240179	01.0073
230065	01.4624	230155	01.1095	240003	01.1957	240091	00.9082	240180	00.9487
230066	01.3232	230156	01.6427	240004	01.4744	240093	01.2910	240183	01.3732
230068	01.3828	230157	01.3886	240005	00.8935	240094	00.9527	240184	00.9682
230069	01.1070	230159	01.2497	240006	01.1380	240096	01.0564	240187	01.2756
230070	01.3160	230162	00.9746	240007	01.0822	240097	01.1141	240192	00.9030
230071	00.6384	230165	01.7622	240008	01.0769	240098	00.9599	240193	01.0840
230072	01.2082	230167	01.2388	240009	01.0600	240099	00.9508	240196	00.6236
230075	01.3344	230169	01.3559	240010	01.9058	240100	01.2708	240200	00.9069
230076	01.2507	230171	01.1103	240011	01.0705	240101	01.3412	240205	00.9107
230077	02.1143	230172	01.1963	240013	01.2559	240102	01.0094	240206	00.7972
230078	01.2621	230173	01.2949	240014	01.1504	240103	01.0766	240207	01.1944
230080	01.2919	230174	01.2820	240016	01.3887	240104	01.1881	240210	01.2594
230081	01.1995	230175	01.0468	240017	01.1134	240105	00.9206	240211	00.9038
230082	01.1539	230176	01.2465	240018	01.2369	240106	01.2795	240898	00.7882
230085	01.2210	230178	01.0169	240019	01.3596	240107	00.8709	240899	00.8710
230086	01.0127	230180	01.0918	240020	01.2333	240108	00.9362	250001	01.5399
230087	01.1174	230184	01.1290	240021	01.0621	240109	01.0081	250002	00.7765
230089	01.3480	230186	00.9792	240022	01.0988	240110	01.0310	250003	00.9589
230090	01.0476	230188	01.2248	240023	01.1315	240111	00.9775	250004	01.4356
230092	01.2529	230189	00.9251	240025	01.1725	240112	00.9831	250005	00.9835
230093	01.1982	230190	01.1447	240027	01.0606	240114	01.0416	250006	00.9773
230095	01.1916	230191	00.8970	240028	01.0528	240115	01.5474	250007	01.2244
230096	01.0654	230193	01.3368	240029	01.1988	240116	00.9184	250008	00.9372
230097	01.5500	230194	01.1860	240030	01.3277	240117	01.1036	250009	01.1156
230099	01.2724	230195	01.3058	240031	00.9458	240119	00.8475	250010	01.0025
230100	01.1690	230197	01.2242	240036	01.4736	240121	00.9609	250012	00.8733
230101	01.1318	230199	01.1549	240037	01.0787	240122	01.1381	250015	00.9607
230103	01.0271	230201	01.0165	240038	01.4693	240123	01.0794	250016	00.8719
230104	01.6803	230204	01.3064	240040	01.2452	240124	01.0091	250017	01.0209
230105	01.5971	230205	01.0249	240041	01.1851	240125	00.9293	250018	00.9363
230106	01.1301	230207	01.2716	240043	01.1773	240127	00.9329	250019	01.3365
230107	00.9164	230208	01.0791	240044	01.1741	240128	01.1364	250020	01.0016
230108	01.1772	230211	00.9307	240045	01.0608	240129	01.0413	250021	00.9026
230110	01.2499	230212	01.1131	240047	01.4131	240130	01.0184	250023	00.8015
230111	01.0338	230213	01.0839	240048	01.2781	240132	01.2706	250024	00.9050
230113	01.0124	230216	01.3194	240049	01.7230	240133	01.1282	250025	01.0061
230114	00.6462	230217	01.1899	240050	01.1148	240135	00.8918	250027	00.9713
230115	00.9698	230219	00.9790	240051	00.9245	240136	00.8937	250029	00.9231
230116	00.9002	230221	01.2634	240052	01.2132	240137	01.1670	250030	00.9331
230117	01.8809	230222	01.3368	240053	01.4695	240138	00.8527	250031	01.2064
230118	01.2624	230223	01.2949	240056	01.3104	240139	00.9820	250032	01.3393
230119	01.2358	230227	01.4365	240057	01.7114	240140	00.7380	250033	01.0033
230120	01.0471	230228	01.2444	240058	00.9840	240141	01.0351	250034	01.4589
230121	01.2632	230230	01.3782	240059	01.1410	240142	01.1385	250035	00.8741
230122	01.3263	230232	01.0052	240061	01.4766	240143	00.9277	250036	01.0085
230124	01.0877	230235	01.0119	240063	01.5036	240144	00.9921	250037	00.9102
230125	01.3536	230236	01.3646	240064	01.1795	240145	01.0649	250038	00.8891
230128	01.3192	230237	01.1827	240065	01.0480	240146	00.9352	250039	00.9782
230129	01.9560	230239	01.1941	240066	01.3455	240148	01.0028	250040	01.1900
230130	01.6273	230241	01.1864	240069	01.1632	240150	00.9566	250042	01.1580
230132	01.4221	230244	01.3795	240071	01.1107	240152	00.9781	250043	00.9090

Provider	Case mix	Provider	Case mix	Provider	Case mix	Provider	Case mix	Provider	Case mix
250044	01.0473	250141	01.1657	260085	01.5326	260899	00.8228	280014	01.0428
250045	01.1864	250898	00.8559	260086	01.1041	270002	01.2251	280015	00.9748
250046	01.0265	250899	00.8698	260089	01.0699	270003	01.1832	280017	01.1827
250047	00.8965	260001	01.5707	260091	01.6009	270004	01.6430	280018	00.9702
250048	01.3857	260002	01.3737	260092	01.0858	270006	00.8964	280020	01.4395
250049	00.9585	260003	00.9599	260094	01.0903	270007	01.0817	280021	01.1521
250050	01.2125	260004	01.0397	260095	01.3922	270009	01.0825	280022	01.0292
250051	00.9174	260005	01.4687	260096	01.4752	270011	01.0993	280023	01.3202
250057	01.1432	260006	01.4662	260097	01.2022	270012	01.4842	280024	00.8529
250058	01.1760	260007	01.3411	260100	01.0440	270013	01.2819	280025	00.9922
250059	01.0629	260008	01.2948	260102	01.0075	270014	01.6488	280026	01.2369
250060	00.7890	260009	01.2502	260103	01.3183	270016	00.8745	280028	00.9854
250061	00.8942	260011	01.5834	260104	01.7238	270017	01.2230	280029	01.0613
250062	00.9611	260012	01.0017	260105	01.9227	270019	00.9323	280030	01.8618
250063	00.8628	260013	01.2306	260107	01.3340	270021	01.1487	280031	01.0409
250065	00.8900	260014	01.6464	260108	01.7083	270023	01.3190	280032	01.2267
250066	00.9767	260015	01.2268	260109	01.0493	270024	00.9570	280033	01.0677
250067	00.9783	260016	01.6060	260110	01.6254	270026	00.9755	280034	01.2409
250068	00.8565	260017	01.2002	260111	01.0109	270027	01.1239	280035	00.9618
250069	01.2495	260018	01.0024	260112	01.4424	270028	01.0544	280037	00.9845
250071	01.0909	260019	01.0022	260113	01.1709	270029	01.1327	280038	01.0469
250072	01.2504	260020	01.6911	260115	01.0948	270030	01.0155	280039	01.1272
250073	00.9859	260021	01.3040	260116	01.1773	270031	00.9423	280040	01.5812
250076	00.9279	260022	01.4028	260119	01.1644	270032	01.1473	280041	00.9943
250077	00.9437	260023	01.2386	260120	01.2877	270033	00.9096	280042	00.9338
250078	01.3960	260024	01.0578	260122	01.2572	270035	00.9991	280043	01.0640
250079	00.8720	260025	01.2719	260123	00.9566	270036	01.0216	280045	01.0703
250081	01.2428	260027	01.5170	260127	01.0220	270039	00.9767	280046	00.9779
250082	01.2026	260029	01.1847	260128	00.9554	270040	01.0454	280047	01.1901
250083	00.9154	260030	01.1670	260129	01.0885	270041	00.9269	280048	01.1206
250084	01.1659	260031	01.4396	260131	01.2490	270044	01.2229	280049	01.0482
250085	01.0603	260032	01.6513	260134	01.2638	270046	00.9698	280050	01.0145
250086	00.9991	260033	01.3646	260137	01.1782	270047	00.9950	280051	00.9488
250088	01.0369	260034	01.0911	260138	01.8874	270048	01.0553	280052	01.0393
250089	01.0214	260035	01.0616	260141	02.1225	270049	01.6485	280054	01.2263
250091	00.9586	260036	01.0241	260142	01.1699	270050	01.0347	280055	00.9146
250093	01.1766	260037	01.2948	260143	00.9856	270051	01.2403	280056	00.9873
250094	01.2487	260039	01.2185	260146	01.1902	270052	01.0314	280057	01.0298
250095	01.0067	260040	01.4628	260147	01.0086	270053	00.9789	280058	01.1157
250096	01.1606	260042	01.1971	260148	01.0036	270055	00.6705	280060	01.5309
250097	01.1915	260044	01.0715	260158	01.0543	270057	01.1327	280061	01.3186
250098	00.8690	260047	01.3484	260159	01.1434	270058	00.8771	280062	01.1679
250099	01.2247	260048	01.4423	260160	01.1230	270059	00.8983	280064	01.0573
250100	01.2312	260050	01.0850	260162	01.0904	270060	00.8912	280065	01.1625
250101	00.8580	260051	01.1498	260163	01.1934	270063	00.8807	280066	01.0617
250102	01.4900	260052	01.2498	260164	01.1381	270067	00.9368	280068	00.9701
250104	01.3720	260053	01.1146	260166	01.2070	270068	00.8296	280070	01.2179
250105	00.9316	260054	01.3382	260172	01.0053	270072	00.8245	280073	00.9880
250107	00.9947	260055	01.0822	260173	01.0288	270073	01.2172	280074	01.1250
250109	00.9407	260057	01.2591	260175	01.1373	270074	00.8855	280075	01.2557
250112	01.0254	260059	01.1251	260176	01.6226	270075	00.9132	280076	00.9680
250117	01.1272	260061	01.0984	260177	01.2979	270076	00.8250	280077	01.2516
250119	01.0188	260062	01.1714	260178	01.5342	270079	00.8914	280078	01.0864
250120	01.0266	260063	01.1740	260179	01.4914	270080	01.1023	280079	01.0308
250122	01.2128	260064	01.3768	260180	01.5708	270081	00.9382	280080	01.1301
250123	01.2588	260065	01.6884	260183	01.5767	270082	00.9416	280081	01.5001
250124	00.8932	260066	01.1278	260186	01.1638	270083	01.0878	280082	01.3382
250125	01.2861	260067	00.9312	260188	01.3542	270084	00.8941	280083	00.9476
250126	01.0194	260068	01.8067	260189	00.8693	270898	00.8024	280084	00.9869
250127	00.7758	260070	01.1725	260190	01.1773	270899	00.8443	280085	00.9105
250128	00.9426	260073	01.0728	260191	01.1961	280001	01.0482	280088	01.6844
250129	00.8723	260074	01.1585	260193	01.2724	280003	01.9394	280089	01.0653
250131	00.9282	260077	01.4769	260195	01.1184	280005	01.4339	280090	00.9574
250134	00.9408	260078	01.1305	260197	01.2118	280009	01.5348	280091	01.0503
250136	00.7886	260079	01.0009	260198	01.2413	280010	03.4238	280092	00.9364
250138	01.2497	260080	01.1264	260200	01.2104	280011	01.0128	280094	01.1132
250139	00.7669	260081	01.4254	260202	01.2520	280012	01.1794	280097	00.8642
250140	00.9025	260082	01.1355	260898	00.8503	280013	01.9231	280098	00.9837

PAGE 10 OF 17

Provider	Case mix	Provider	Case mix	Provider	Case mix	Provider	Case mix	Provider	Case mix
280101	01.0937	300899	00.8442	310085	01.2098	320899	00.8960	330095	01.2447
280102	00.8573	310001	01.7032	310086	01.2065	330001	01.1438	330096	01.1132
280104	01.0018	310002	01.8442	310087	01.2087	330002	01.4243	330097	01.2031
280105	01.2333	310003	01.2580	310088	01.1847	330003	01.3075	330100	00.6781
280106	01.1196	310005	01.2245	310090	01.2296	330004	01.3579	330101	01.6278
280107	01.0025	310006	01.1926	310091	01.2256	330005	01.7282	330102	01.2866
280108	01.0471	310008	01.3004	310092	01.3427	330006	01.3380	330103	01.1953
280109	00.8618	310009	01.1752	310093	01.1320	330007	01.3396	330104	01.3562
280110	00.8623	310010	01.2554	310096	01.8704	330008	01.1660	330106	01.5712
280111	01.2175	310011	01.2290	310105	01.1536	330009	01.3073	330107	01.2163
280114	00.9306	310012	01.6010	310108	01.3397	330010	01.2091	330108	01.1827
280115	01.0551	310013	01.2947	310110	01.2029	330011	01.1730	330110	01.0962
280117	01.1176	310014	01.5904	310111	01.2640	330012	01.6096	330111	01.1369
280118	01.0701	310015	01.7185	310112	01.2334	330013	02.0962	330114	00.9544
280119	00.8959	310016	01.2632	310113	01.2181	330014	01.4742	330115	01.2707
280123	00.7645	310017	01.3321	310115	01.1446	330016	00.9967	330116	00.9889
280898	00.8154	310018	01.2481	310116	01.2486	330019	01.2659	330118	01.5665
280899	00.8709	310019	01.6785	310118	01.2523	330020	01.0415	330119	01.6152
290001	01.6104	310020	01.2370	310119	01.5219	330022	00.9401	330121	00.9780
290002	00.9693	310021	01.2557	310120	01.1050	330023	01.1999	330122	01.2843
290003	01.6761	310022	01.2188	310121	01.1161	330024	01.7968	330125	01.7708
290005	01.1747	310024	01.2473	310898	00.8024	330025	01.0795	330126	01.1630
290006	01.0120	310025	01.1606	310899	00.8443	330027	01.4338	330127	01.2820
290007	01.7973	310026	01.2613	320001	01.4317	330028	01.3208	330128	01.4989
290008	01.3000	310027	01.2751	320002	01.2656	330029	01.0736	330132	01.1424
290009	01.4996	310028	01.1495	320003	01.1473	330030	01.1447	330133	01.2932
290010	01.1124	310029	01.7952	320004	01.2040	330033	01.1540	330135	01.2672
290011	00.9990	310031	02.6143	320005	01.2287	330034	01.0697	330136	01.2636
290012	01.3341	310032	01.2750	320006	01.3135	330036	01.1503	330140	01.6790
290013	01.0405	310034	01.2259	320009	01.4620	330037	01.0396	330141	01.3023
290014	01.0033	310036	01.2212	320011	00.9896	330038	01.1647	330142	01.3755
290015	00.8412	310037	01.2195	320012	01.0410	330039	00.8725	330144	01.0279
290016	01.0938	310038	01.7734	320013	01.0551	330041	01.3644	330148	01.0043
290018	00.9035	310039	01.2862	320014	00.9138	330043	01.2413	330151	01.1009
290019	01.2246	310040	01.2175	320016	01.1534	330044	01.1795	330152	01.3795
290020	01.2048	310041	01.2661	320017	01.2441	330045	01.3591	330153	01.4989
290021	01.5282	310042	01.1619	320018	01.3493	330046	01.5738	330154	01.4583
290022	01.6436	310043	01.2152	320019	01.4638	330047	01.2300	330157	01.2597
290027	01.0616	310044	01.2543	320021	01.7061	330048	01.2581	330158	01.2943
290029	00.8721	310045	01.2743	320022	01.2404	330049	01.2130	330159	01.3076
290032	01.3466	310047	01.2754	320023	01.1054	330053	01.0582	330160	01.4637
300001	01.2813	310048	01.2502	320030	00.9918	330055	01.3757	330161	01.0257
300003	01.8497	310049	01.3307	320031	00.9371	330056	01.4324	330162	01.2967
300005	01.2873	310050	01.1799	320032	00.9381	330057	01.6166	330163	01.1568
300006	01.1128	310051	01.2781	320033	01.1669	330058	01.3115	330164	01.3464
300007	01.1242	310052	01.2087	320035	01.1181	330059	01.4692	330166	00.9268
300008	01.2835	310054	01.2555	320037	01.1340	330061	01.3321	330167	01.5484
300009	01.1585	310056	01.1523	320038	01.2461	330062	01.0706	330169	01.3836
300010	01.1714	310057	01.2676	320046	01.0415	330064	01.3560	330171	01.3182
300011	01.2464	310058	01.1626	320048	01.3088	330065	01.1551	330175	01.0709
300012	01.3383	310060	01.1870	320056	00.8849	330066	01.2255	330177	00.9993
300013	01.2264	310061	01.1904	320057	01.0453	330067	01.3172	330179	00.9113
300014	01.3084	310062	01.3007	320058	00.8769	330072	01.3529	330180	01.2120
300015	01.1263	310063	01.3402	320059	01.0262	330073	01.2027	330181	01.2931
300016	01.2599	310064	01.2372	320060	00.8850	330074	01.2287	330182	02.3225
300017	01.2032	310067	01.2542	320061	01.2372	330075	01.0449	330183	01.3750
300018	01.2110	310069	01.1470	320062	00.9339	330078	01.3838	330184	01.2938
300019	01.2918	310070	01.3033	320063	01.2964	330079	01.1401	330185	01.1771
300020	01.2471	310072	01.2539	320065	01.2295	330080	01.2665	330186	01.0514
300021	01.1838	310073	01.4201	320067	00.8716	330082	01.1914	330188	01.2030
300022	01.1127	310074	01.3236	320068	00.9895	330084	00.9584	330189	00.8562
300023	01.2537	310075	01.2965	320069	01.1045	330085	01.3619	330191	01.2484
300024	01.2004	310076	01.3560	320070	00.9608	330086	01.3084	330193	01.3303
300028	01.1051	310077	01.6230	320074	01.1077	330088	01.0767	330194	01.7676
300029	01.2874	310078	01.2499	320076	01.1966	330090	01.6770	330195	01.6034
300033	01.0425	310081	01.2396	320079	01.1573	330091	01.3758	330196	01.3457
300034	01.8650	310083	01.2688	320080	00.6470	330092	00.9945	330197	01.0284
300898	00.7825	310084	01.2238	320898	00.8060	330094	01.2186	330198	01.3554

Provider	Case mix	Provider	Case mix	Provider	Case mix	Provider	Case mix	Provider	Case mix
330199	01.3293	330315	01.1584	340040	01.7854	340135	00.8679	350055	00.9508
330201	01.4955	330316	01.2528	340041	01.2259	340136	00.9373	350056	00.8768
330202	01.4220	330327	00.9353	340042	01.1445	340137	01.1745	350058	01.0178
330203	01.3798	330331	01.2210	340044	01.0655	340138	01.1782	350060	00.9468
330204	01.3378	330332	01.2464	340045	00.9992	340141	01.5711	350061	00.9743
330205	01.1203	330333	01.2667	340047	01.8441	340142	01.1885	350063	00.8795
330208	01.1770	330336	01.2694	340048	01.2335	340143	01.3316	350064	00.7983
330209	01.2394	330338	01.1631	340049	00.6791	340144	01.3129	350065	00.9795
330211	01.1845	330339	00.7865	340050	01.1995	340145	01.3058	350066	00.8528
330212	01.2036	330340	01.1561	340051	01.1900	340146	01.0431	350898	00.8061
330213	01.0769	330350	01.7856	340052	01.0746	340147	01.2910	350899	00.8568
330214	01.7095	330353	01.2067	340053	01.5650	340148	01.4261	360001	01.2534
330215	01.1923	330354	01.2822	340054	01.0576	340151	01.1772	360002	01.1623
330218	01.2973	330357	01.3439	340055	01.2102	340153	01.8088	360003	01.6539
330219	01.5433	330359	00.9383	340060	01.1361	340154	00.8271	360006	01.7876
330221	01.2325	330372	01.2610	340061	01.6473	340155	01.4934	360007	01.1273
330222	01.2373	330381	01.2419	340063	01.0260	340156	00.8605	360008	01.2352
330223	01.0665	330383	01.3578	340064	01.1072	340158	01.1242	360009	01.3393
330224	01.2125	330385	01.1998	340065	01.2437	340159	01.1506	360010	01.1763
330225	01.2013	330386	01.1395	340067	01.1199	340160	01.0602	360011	01.2571
330226	01.2758	330387	00.8997	340068	01.2966	340162	01.3085	360012	01.2595
330229	01.2174	330389	01.8623	340069	01.7627	340164	01.3391	360013	01.0783
330230	01.5058	330390	01.2279	340070	01.2476	340166	01.4142	360014	01.2130
330231	01.0768	330393	01.6018	340071	01.0787	340168	00.5580	360015	01.4871
330232	01.2653	330394	01.4432	340072	01.0752	340898	00.8024	360016	01.4893
330233	01.4736	330395	01.3567	340073	01.3927	340899	00.8299	360017	01.7169
330234	02.0040	330396	01.1829	340075	01.1832	350001	01.0397	360018	01.4584
330235	01.1690	330397	01.3141	340080	01.0965	350002	01.7022	360019	01.1941
330236	01.3491	330398	01.2166	340084	01.0557	350003	01.1439	360020	01.2954
330238	01.0952	330399	01.3516	340085	01.2707	350004	01.9044	360021	01.2256
330239	01.1592	330898	00.7874	340087	01.1950	350005	01.1972	360024	01.2390
330240	01.2573	330899	00.8416	340088	01.2190	350006	01.3237	360025	01.1888
330241	01.8831	340001	01.3275	340089	00.9514	350007	01.0583	360026	01.1311
330242	01.2808	340002	01.8310	340090	01.1344	350008	00.9790	360027	01.5505
330244	01.0491	340003	01.1707	340091	01.6714	350009	01.1810	360028	01.3271
330245	01.2671	340004	01.4039	340093	01.0543	350010	01.0781	360029	01.1186
330246	01.2141	340005	01.1584	340094	01.3618	350011	01.7832	360030	01.1530
330247	00.6761	340006	01.1632	340096	01.1743	350012	01.0574	360031	01.2536
330249	01.2474	340007	01.1548	340097	01.0329	350013	01.0814	360032	01.1513
330250	01.2292	340008	01.1310	340098	01.6391	350014	01.0791	360034	01.1439
330252	00.9569	340009	01.1592	340099	01.1880	350015	01.5344	360035	01.4568
330254	01.0180	340010	01.3166	340100	00.9069	350016	00.9438	360036	01.1944
330258	01.3081	340011	01.0653	340101	00.9958	350017	01.3332	360037	01.9975
330259	01.3523	340012	01.0944	340104	00.9594	350018	01.0228	360038	01.5263
330261	01.2567	340013	01.2427	340105	01.3416	350019	01.5401	360039	01.2661
330263	01.0461	340014	01.6714	340106	01.1219	350020	01.3209	360040	01.3090
330264	01.2179	340015	01.2328	340107	01.3241	350021	01.1082	360041	01.3118
330265	01.2475	340016	01.1139	340109	01.3153	350023	00.9268	360042	01.0940
330267	01.2624	340017	01.2893	340111	01.1961	350024	01.0438	360044	01.0706
330268	01.0664	340018	01.1950	340112	01.0492	350025	00.9913	360045	01.4303
330270	01.9181	340019	01.0903	340113	01.9497	350027	00.9878	360046	01.1307
330273	01.2918	340020	01.2273	340114	01.4635	350029	00.9542	360047	01.0638
330275	01.2869	340021	01.2286	340115	01.4781	350030	01.0454	360048	01.8010
330276	01.2095	340022	01.0707	340116	01.8039	350033	00.9567	360049	01.2728
330277	01.1707	340023	01.2410	340119	01.2852	350034	00.9009	360050	01.1993
330279	01.2521	340024	01.2421	340120	01.0940	350035	00.9347	360051	01.4864
330281	00.5564	340025	01.1648	340121	01.0442	350036	00.9277	360052	01.6739
330285	01.6005	340027	01.1522	340122	00.9954	350038	01.0516	360054	01.3102
330286	01.3404	340028	01.4274	340123	01.1463	350039	00.9653	360055	01.2086
330288	01.0046	340030	01.9430	340124	01.0855	350041	01.0079	360056	01.2997
330290	01.7419	340031	01.0932	340125	01.4556	350042	00.9900	360057	00.9696
330293	01.1743	340032	01.2968	340126	01.3572	350043	01.5915	360058	01.1388
330304	01.2439	340034	01.2151	340127	01.2000	350044	00.8474	360059	01.5215
330306	01.3946	340035	01.0925	340129	01.3028	350047	01.2464	360062	01.6256
330307	01.1950	340036	01.1886	340130	01.3873	350049	01.1328	360063	01.1168
330308	01.2255	340037	01.2536	340131	01.3318	350050	00.9934	360064	01.4693
330309	01.2257	340038	01.2255	340132	01.4166	350051	00.9741	360065	01.2504
330314	01.2790	340039	01.2798	340133	01.1228	350053	00.9322	360066	01.2613

PAGE 12 OF 17

Provider	Case mix	Provider	Case mix	Provider	Case mix	Provider	Case mix	Provider	Case mix
360067	01.0740	360142	00.9717	370005	00.9611	370099	01.1542	380020	01.3715
360068	01.5459	360143	01.2909	370006	01.2456	370100	01.0232	380021	01.2129
360069	01.0070	360144	01.2747	370007	01.1946	370103	00.9117	380022	01.2118
360070	01.4999	360145	01.5707	370008	01.4141	370105	01.9947	380023	01.2526
360071	01.3052	360147	01.1791	370011	00.9766	370106	01.3715	380024	01.3452
360072	01.1468	360148	01.1536	370012	00.8910	370108	01.1451	380025	01.2531
360074	01.3338	360149	01.1119	370013	01.6822	370110	00.9650	380026	01.3461
360075	01.4440	360150	01.2642	370014	01.2877	370112	01.0130	380027	01.2294
360076	01.2684	360151	01.3654	370015	01.1424	370113	01.1008	380029	01.1227
360077	01.4318	360152	01.4909	370016	01.3570	370114	01.6068	380031	00.9753
360078	01.3300	360153	01.1774	370017	00.9907	370117	01.4619	380033	01.6789
360079	01.6767	360154	01.0857	370018	01.2298	370121	01.3348	380035	01.2271
360080	01.2041	360155	01.2947	370019	01.2474	370122	01.1059	380036	01.0689
360081	01.3128	360156	01.1299	370020	01.2799	370123	01.1900	380037	01.2657
360082	01.2860	360159	01.1632	370021	00.9849	370125	01.0332	380038	01.2972
360083	01.2322	360161	01.2233	370022	01.3024	370126	01.0470	380039	01.2975
360084	01.4918	360162	01.2459	370023	01.4091	370131	01.0631	380040	01.3569
360085	01.6665	360163	01.7052	370025	01.3406	370133	01.0758	380042	01.0774
360086	01.3369	360164	00.9391	370026	01.4199	370138	01.1593	380047	01.6180
360087	01.3577	360165	01.0792	370028	01.7214	370139	01.0297	380048	01.0548
360088	01.1776	360166	01.1096	370029	01.1887	370140	01.1081	380050	01.3194
360089	01.0813	360169	01.0496	370030	01.2372	370141	01.4212	380051	01.4747
360090	01.2394	360170	01.1451	370032	01.3621	370146	01.0660	380052	01.2107
360091	01.2692	360172	01.3984	370033	01.1174	370148	01.3338	380055	01.1838
360092	01.1437	360174	01.1942	370034	01.1482	370149	01.2283	380056	01.0961
360093	01.2853	360175	01.1397	370035	01.4525	370153	01.1418	380060	01.3738
360094	01.2371	360176	01.2204	370036	01.0052	370154	00.9639	380061	01.6329
360095	01.2835	360177	01.2106	370037	01.5460	370156	01.0811	380062	00.9756
360096	01.1080	360178	01.2498	370038	01.0032	370157	00.9035	380063	01.2334
360098	01.3723	360179	01.2524	370039	01.2782	370158	01.1006	380064	01.3182
360099	01.0650	360180	02.2001	370040	01.0759	370159	01.2605	380065	00.9686
360100	01.2759	360184	00.8025	370041	01.0391	370161	01.2575	380066	01.2062
360101	01.6803	360185	01.2094	370042	00.8807	370163	00.8880	380068	00.9978
360102	01.2769	360186	01.1901	370043	01.0168	370165	01.1324	380069	01.2411
360103	01.3282	360187	01.2880	370045	01.0092	370166	01.1092	380070	01.0540
360104	00.8937	360188	01.0681	370046	00.9333	370169	01.0395	380071	01.2572
360106	01.1125	360189	01.0250	370047	01.2195	370170	00.9783	380072	00.9225
360107	01.1391	360192	01.3144	370048	01.2188	370171	01.0136	380075	01.3931
360108	01.0289	360193	01.3230	370049	01.3436	370172	00.9019	380078	01.1569
360109	01.0295	360194	01.1442	370051	00.9852	370173	01.2381	380081	01.1417
360112	01.6491	360195	01.2173	370054	01.2764	370174	00.9734	380082	01.2589
360113	01.2918	360197	01.1654	370056	01.4479	370176	01.2259	380083	01.1622
360114	01.0447	360200	01.1348	370057	01.1008	370177	00.9699	380084	01.2297
360115	01.2431	360203	01.1274	370059	01.2336	370178	01.0015	380087	01.0743
360116	01.0758	360204	01.2462	370060	01.0235	370179	00.9605	380088	00.9436
360118	01.2672	360210	01.1554	370063	01.1827	370180	00.9839	380089	01.3093
360119	01.2255	360211	01.1679	370064	01.0099	370183	01.1330	380090	01.3165
360120	00.7546	360212	01.4509	370065	01.0625	370186	00.9484	380091	01.1747
360121	01.2717	360213	01.1356	370069	01.1063	370189	00.9916	380094	01.0142
360122	01.3348	360218	01.2873	370071	01.0167	370190	01.0816	380898	00.8383
360123	01.1999	360230	01.3400	370072	00.9499	370898	00.7870	380899	00.8276
360124	01.2052	360231	01.0886	370076	01.1771	370899	00.7961	390001	01.2884
360125	01.0612	360232	01.0889	370077	01.1818	380001	01.3274	390002	01.2966
360126	01.2130	360234	01.2742	370078	01.5009	380002	01.1890	390003	01.1671
360127	01.0741	360236	01.1766	370079	00.9184	380003	01.1920	390004	01.2620
360128	01.0532	360238	00.9128	370080	00.9571	380004	01.8633	390005	01.0247
360129	01.0136	360239	01.1610	370082	00.9897	380005	01.1644	390006	01.7442
360130	01.1429	360240	00.5767	370083	00.9551	380006	01.2568	390007	01.2196
360131	01.2181	360241	00.6038	370084	00.9760	380007	01.7372	390008	01.1831
360132	01.2239	360242	01.4433	370085	00.8630	380008	01.0578	390009	01.5841
360133	01.3977	360243	00.9187	370086	01.2103	380009	01.6823	390010	01.1516
360134	01.5354	360244	00.7968	370089	01.3061	380010	01.1702	390011	01.1706
360135	01.1295	360245	00.9883	370091	01.5841	380011	01.1552	390012	01.2238
360136	01.1278	360898	00.8302	370092	01.0818	380013	01.2218	390013	01.2089
360137	01.5526	360899	00.8967	370093	01.7477	380014	01.3178	390014	00.6912
360139	01.0331	370001	01.6929	370094	01.4151	380017	01.8111	390015	01.0853
360140	01.0409	370002	01.1927	370095	00.8996	380018	01.8943	390016	01.1722
360141	01.4347	370004	01.2491	370097	01.3036	380019	01.1193	390017	01.1894

Provider	Case mix	Provider	Case mix	Provider	Case mix	Provider	Case mix	Provider	Case mix
390018	01.2229	390097	01.3126	390176	01.1466	390899	00.8517	410012	01.6547
390019	01.0880	390098	01.6395	390178	01.3076	400001	01.2067	410013	01.1794
390021	01.0174	390100	01.6719	390179	01.2890	400002	01.2762	410898	00.7956
390022	01.3353	390101	01.2080	390180	01.3831	400003	01.2025	410899	00.8315
390023	01.1985	390102	01.2748	390181	01.0472	400004	01.1643	420002	01.3531
390024	00.7999	390103	01.1001	390183	01.0791	400005	01.0243	420004	02.0065
390025	00.7817	390104	01.0892	390184	01.1516	400006	01.2732	420005	01.0739
390026	01.2453	390106	01.0005	390185	01.1270	400007	01.1409	420006	01.4045
390027	01.7938	390107	01.1912	390186	01.0366	400008	01.2120	420007	01.5400
390028	01.7686	390108	01.2603	390189	01.0836	400009	00.9809	420009	01.2405
390029	01.7668	390109	01.1855	390191	01.1329	400010	00.9305	420010	01.0614
390030	01.1534	390110	01.4920	390192	01.1087	400011	01.0389	420011	01.1212
390031	01.1575	390111	01.7279	390193	01.1677	400012	01.0234	420014	01.0692
390032	01.2000	390112	01.2045	390194	01.1058	400013	01.0374	420015	01.3027
390035	01.2662	390113	01.2120	390195	01.6457	400014	01.3062	420016	01.2120
390036	01.2413	390114	01.0550	390196	01.2942	400015	01.2514	420018	01.6640
390037	01.2224	390115	01.2825	390197	01.2804	400016	01.2790	420019	01.1621
390039	01.1195	390116	01.1782	390198	01.2104	400017	01.0975	420020	01.2329
390040	00.9842	390117	01.1770	390199	01.2728	400018	01.2488	420022	00.9879
390041	01.2490	390118	01.1226	390200	01.0584	400019	01.5851	420023	01.3585
390042	01.2979	390119	01.3303	390201	01.2879	400021	01.3256	420026	01.9356
390043	01.0783	390121	01.1764	390203	01.2512	400022	01.2790	420027	01.3318
390044	01.5588	390122	01.0405	390204	01.2489	400024	01.0545	420028	01.1364
390045	01.3466	390123	01.2550	390205	01.2369	400026	00.8668	420029	01.8346
390046	01.4505	390125	01.1782	390206	01.3034	400027	01.1780	420030	01.2513
390047	01.5017	390126	01.1957	390209	00.9264	400028	01.0637	420031	01.0011
390048	01.1341	390127	01.1389	390211	01.1453	400029	01.0261	420032	00.9316
390049	01.5619	390128	01.1415	390213	01.2165	400031	01.1418	420033	01.1939
390050	01.9721	390130	01.1102	390215	01.1702	400032	01.1386	420035	00.7343
390051	02.1509	390131	01.1812	390217	01.1478	400044	01.2355	420036	01.2699
390052	01.1570	390132	01.1095	390219	01.2328	400048	01.0630	420037	01.1867
390054	01.1228	390133	01.5534	390220	01.1308	400061	01.7720	420038	01.2796
390055	01.7069	390135	01.2334	390222	01.2191	400079	01.1625	420039	01.1477
390056	01.0779	390136	01.2082	390223	01.7069	400087	01.2492	420040	01.2416
390057	01.2678	390137	01.1857	390224	00.9321	400088	00.5448	420042	01.0715
390058	01.3227	390138	01.2120	390225	01.2157	400089	00.9929	420043	01.2403
390059	01.4308	390139	01.4538	390226	01.6426	400094	00.9115	420044	01.1508
390060	01.1515	390142	01.6984	390228	01.2071	400098	01.1894	420048	01.1626
390061	01.2359	390145	01.1904	390229	01.5015	400102	01.1721	420049	01.1435
390062	01.1546	390146	01.1942	390231	01.3381	400103	01.4142	420051	01.5886
390063	01.6826	390147	01.2126	390233	01.2687	400104	01.2555	420053	01.0501
390064	01.4478	390148	01.1482	390235	01.8098	400105	01.2890	420054	01.2013
390065	01.1711	390149	01.1829	390236	01.2628	400106	01.1814	420055	01.0572
390066	01.2596	390150	01.1652	390237	01.4913	400109	01.5198	420056	01.1189
390067	01.6240	390151	01.2532	390238	00.9107	400110	01.1475	420057	01.1405
390068	01.2718	390152	01.0519	390242	01.2019	400111	01.1770	420059	00.9772
390069	01.2372	390153	01.2105	390244	00.8953	400112	01.2178	420061	01.2671
390070	01.2202	390154	01.1602	390245	01.3455	400113	01.2818	420062	01.4107
390071	01.0503	390155	01.2007	390246	01.1741	400114	01.0229	420064	01.0741
390072	00.9939	390156	01.3511	390247	01.0536	400115	00.9724	420065	01.3190
390073	01.4896	390157	01.1590	390249	01.1324	400117	01.2168	420066	00.9439
390074	01.2036	390158	01.2851	390252	00.7841	400118	01.1674	420067	01.1899
390075	01.2669	390159	01.2717	390256	01.6995	400120	01.3176	420068	01.2193
390076	01.2445	390160	01.1782	390258	01.2963	400121	01.1824	420069	01.0735
390078	01.0492	390161	01.1592	390260	01.2779	400122	00.9273	420070	01.3021
390079	01.6698	390162	01.2304	390261	01.8868	400123	01.1444	420071	01.3921
390080	01.2048	390163	01.1546	390262	01.7824	400898	00.7430	420072	01.0022
390081	01.2248	390164	02.1200	390263	01.4342	400899	00.8299	420073	01.2987
390083	01.1717	390165	01.0984	390265	01.2701	410001	01.3365	420074	00.9923
390084	01.1558	390166	01.1098	390266	01.1147	410002	01.1414	420075	01.0104
390086	01.1024	390167	01.2431	390267	01.2026	410004	01.4388	420076	01.1978
390088	01.3097	390168	01.1555	390268	01.2669	410005	01.3085	420078	01.6568
390090	01.7546	390169	01.2591	390270	01.2954	410006	01.2048	420079	01.5645
390091	01.1291	390170	01.6964	390272	00.6037	410007	01.5823	420080	01.3066
390092	01.2187	390171	01.1137	390275	00.5337	410008	01.1556	420081	00.8313
390093	01.2772	390172	01.1751	390277	00.5607	410009	01.3276	420082	01.3517
390095	01.2211	390173	01.1175	390278	00.9215	410010	01.0619	420083	01.1847
390096	01.2319	390174	01.6169	390898	01.0669	410011	01.2057	420084	00.7573

PAGE 14 OF 17

Provider	Case mix	Provider	Case mix	Provider	Case mix	Provider	Case mix	Provider	Case mix
420085	01.2910	430898	00.7854	440090	01.0426	440206	00.9142	450098	01.1101
420086	01.4245	430899	00.8466	440091	01.4721	440898	00.7868	450099	01.2332
420087	01.5452	440001	01.0375	440095	01.0350	440899	00.8833	450101	01.3997
420088	01.2119	440002	01.5764	440100	01.0806	450002	01.4432	450102	01.6532
420089	01.3393	440003	01.1457	440102	01.0238	450004	01.1202	450104	01.2137
420091	00.5469	440006	01.3594	440103	01.2305	450005	01.0991	450107	01.4806
420092	01.0958	440007	01.0199	440104	01.5103	450007	01.3004	450108	01.0440
420898	00.8629	440008	00.9806	440105	01.2811	450008	01.3167	450109	01.0266
420899	00.8568	440009	01.0506	440109	01.0848	450010	01.2962	450110	01.1676
430004	01.1636	440010	00.9163	440110	01.0208	450011	01.6296	450111	01.2517
430005	01.2119	440011	01.2089	440111	01.2696	450014	01.0810	450112	01.2600
430007	01.1497	440012	01.3575	440114	01.0445	450015	01.4882	450113	01.2810
430008	01.1876	440014	00.9036	440115	01.0863	450016	01.6534	450115	01.0549
430009	01.0818	440015	01.5553	440120	01.4619	450018	01.6282	450118	01.4623
430010	01.1753	440016	00.9491	440121	00.9853	450020	01.0779	450119	01.1912
430011	01.3122	440017	01.5104	440125	01.4956	450021	01.8184	450121	01.4068
430012	01.3044	440018	01.3287	440128	00.7516	450023	01.4141	450123	01.0743
430013	01.2064	440019	01.4656	440130	01.1361	450024	01.4619	450124	01.4723
430014	01.2715	440020	01.2209	440131	01.0785	450025	01.5122	450126	01.3493
430015	01.0944	440022	01.1128	440132	01.1069	450027	01.2759	450127	00.9613
430016	01.7346	440023	01.0025	440133	01.4578	450028	01.3668	450128	01.1920
430017	01.1660	440024	01.3194	440135	01.3880	450029	01.4163	450130	01.4733
430018	00.9631	440025	01.2327	440136	01.2834	450031	01.6165	450131	01.2553
430022	00.9714	440026	01.3084	440137	01.0377	450032	01.2120	450132	01.4788
430023	00.8868	440029	01.2350	440141	01.1460	450033	01.6221	450133	01.4922
430024	00.9961	440030	01.1285	440142	01.1555	450034	01.5197	450135	01.6348
430025	01.0094	440031	01.0384	440143	01.0025	450035	01.4968	450137	01.4085
430026	00.9432	440032	00.9982	440144	01.2306	450037	01.4486	450140	00.8573
430027	01.7196	440033	01.0382	440145	01.0489	450039	01.2276	450142	01.4017
430028	01.0902	440034	01.4065	440146	00.8712	450040	01.6005	450143	01.0165
430029	01.0273	440035	01.2405	440147	00.8940	450042	01.6202	450144	01.1112
430031	00.9322	440038	01.0482	440148	01.1094	450043	01.4853	450145	00.9808
430033	01.0455	440039	01.6097	440149	01.1752	450044	01.5588	450146	01.0476
430034	01.0333	440040	00.8918	440150	01.3087	450046	01.3958	450147	01.3427
430036	01.0386	440041	00.8547	440151	01.2729	450047	01.0487	450148	01.3368
430037	00.9385	440046	01.1870	440152	01.5027	450050	01.1741	450149	01.3820
430038	01.0603	440047	00.8943	440153	01.0877	450051	01.5905	450150	00.9532
430039	01.0525	440048	01.6580	440154	00.7992	450052	01.0865	450151	01.1045
430040	00.9282	440049	01.6456	440156	01.5255	450053	01.1298	450152	01.3943
430041	00.9279	440050	01.1484	440157	01.0210	450054	01.6770	450153	01.5609
430042	01.0154	440051	00.9156	440159	01.1890	450055	01.1360	450154	01.1385
430043	01.1896	440052	01.2014	440160	01.0076	450056	01.5899	450155	01.0344
430044	00.9675	440053	01.1512	440161	01.5790	450057	01.4080	450157	01.0387
430047	01.1549	440054	01.0356	440166	01.3415	450058	01.5102	450160	00.9158
430048	01.1048	440056	01.0479	440168	01.0257	450059	01.3761	450162	01.2527
430049	00.9792	440057	00.9530	440170	01.3574	450060	01.4622	450163	01.0370
430051	01.0049	440058	01.1739	440173	01.4771	450063	00.9770	450164	00.9886
430054	00.8686	440059	01.1936	440174	00.9470	450064	01.4714	450165	00.9948
430056	00.8711	440060	01.2532	440175	01.1614	450065	01.0466	450166	00.9337
430057	00.9116	440061	01.1797	440176	01.2922	450068	01.7256	450169	00.9846
430060	01.0131	440063	01.4202	440178	01.2446	450070	01.1894	450170	01.1076
430062	00.8268	440064	01.0922	440180	01.1057	450072	01.1626	450175	01.3442
430064	01.0730	440065	01.1891	440181	01.0434	450073	01.0470	450176	01.2764
430065	00.9470	440067	01.1798	440182	00.9260	450074	01.3246	450177	01.0785
430066	00.9881	440068	01.1546	440183	01.4979	450076	01.4411	450178	01.1038
430073	01.1732	440069	01.1342	440184	01.2979	450078	00.9909	450179	00.8749
430076	00.9776	440070	00.9335	440185	01.1926	450079	01.4864	450181	00.9906
430077	01.3883	440071	01.3369	440186	01.0925	450080	01.2204	450184	01.4101
430079	00.9647	440072	01.3771	440187	01.1384	450081	01.1867	450185	01.0400
430080	00.9018	440073	01.3117	440189	01.4364	450082	00.9925	450187	01.2481
430081	00.9407	440074	00.8573	440192	01.1229	450083	01.6373	450188	01.0075
430082	00.8862	440078	01.0244	440193	01.2311	450085	01.0819	450190	01.1932
430083	00.8822	440079	00.8743	440194	01.3239	450087	01.4170	450191	01.1243
430084	00.9276	440081	01.1306	440196	00.9506	450090	01.1434	450192	01.1081
430085	00.9085	440082	01.8648	440197	01.3316	450092	01.2225	450193	02.1278
430086	00.9407	440083	01.2186	440200	01.1914	450094	01.2718	450194	01.1605
430087	00.9943	440084	01.2326	440203	01.0219	450096	01.4014	450195	01.3266
430088	00.9812	440087	01.0119	440205	00.9475	450097	01.3950	450196	01.3416

PAGE 15 OF 17

Provider	Case mix	Provider	Case mix	Provider	Case mix	Provider	Case mix	Provider	Case mix
450197	01.1656	450353	01.2027	450551	01.0528	450678	01.4895	450899	00.8574
450200	01.3767	450355	01.1403	450558	01.8078	450681	01.5900	460001	01.6735
450201	00.9812	450358	02.0119	450559	00.9966	450682	01.2451	460003	01.4719
450203	01.1950	450362	00.9220	450561	01.5987	450683	01.3270	460004	01.7636
450209	01.4525	450365	00.8901	450563	01.1744	450684	01.3010	460005	01.3031
450210	01.0771	450366	01.6534	450565	01.2845	450686	01.3875	460006	01.2416
450211	01.2420	450369	01.1059	450570	01.0566	450688	01.3209	460007	01.4484
450213	01.4250	450370	01.1520	450571	01.4712	450690	01.3459	460008	01.3069
450214	01.3460	450371	01.0868	450573	00.9928	450691	01.3509	460009	01.7757
450217	01.0969	450372	01.2892	450574	00.9570	450694	01.1652	460010	01.9775
450219	01.1409	450373	01.1951	450575	00.9503	450696	01.2510	460011	01.3854
450221	01.0616	450374	00.7756	450578	00.9856	450697	01.4011	460013	01.4878
450222	01.7149	450376	01.4361	450580	01.1285	450698	00.8967	460014	01.0513
450224	01.2976	450378	01.2578	450583	00.9739	450700	00.8980	460015	01.2383
450229	01.3784	450379	01.5615	450584	01.2047	450702	01.3461	460016	00.9217
450231	01.5761	450381	00.8876	450586	01.0826	450703	01.4287	460017	01.3428
450233	01.0463	450388	01.6776	450587	01.3004	450704	01.3127	460018	00.9454
450234	00.9726	450389	01.1956	450591	01.1346	450705	00.7704	460019	00.9629
450235	00.9663	450393	01.2869	450596	01.3166	450706	01.1892	460020	01.0292
450236	01.1588	450395	01.0741	450597	01.0628	450709	01.2079	460021	01.3830
450237	01.5721	450399	00.9583	450603	00.8758	450711	01.6957	460022	00.9368
450239	01.2409	450400	01.0551	450604	01.2670	450712	00.7958	460023	01.1350
450241	00.8583	450403	01.2856	450605	01.3016	450713	01.2913	460024	00.9811
450243	00.9012	450410	01.0824	450607	00.9119	450715	01.3294	460025	00.7888
450246	01.0473	450411	00.9768	450609	00.8804	450716	01.2280	460026	00.9522
450249	00.8981	450417	01.0759	450610	01.4441	450717	01.2473	460027	00.9711
450253	01.1033	450418	01.4423	450614	01.1103	450718	01.1775	460029	01.1056
450258	01.1295	450419	01.2166	450615	00.9720	450723	01.2534	460030	01.1223
450259	01.1554	450422	00.7248	450617	01.3733	450724	01.1765	460032	00.9693
450264	00.8332	450423	01.2789	450620	01.1703	450725	01.0347	460033	01.0375
450269	00.9850	450424	01.2849	450623	01.1475	450726	00.8494	460035	00.8764
450270	01.1513	450429	00.9090	450626	00.9764	450727	00.9181	460036	01.0078
450271	01.1454	450431	01.5705	450628	00.9725	450728	00.8566	460037	00.9720
450272	01.2949	450438	01.0012	450630	01.5689	450729	01.0332	460039	00.8843
450276	01.0316	450446	00.8950	450631	01.6490	450730	01.3675	460041	01.2418
450278	01.0661	450447	01.2528	450632	00.9990	450732	01.1367	460042	01.4527
450280	01.2697	450450	01.0045	450633	01.5143	450733	01.3759	460043	01.6470
450283	01.0162	450451	01.0333	450634	01.3828	450734	01.2183	460044	01.1736
450286	01.0437	450457	01.6539	450637	01.3192	450735	00.8396	460046	01.6223
450288	01.1887	450460	01.0207	450638	01.4524	450742	01.2571	460047	01.6782
450289	01.3610	450462	01.7202	450639	01.5463	450743	01.3522	460049	02.0970
450292	01.2724	450464	00.9699	450641	00.9309	450745	00.9319	460898	00.7956
450293	01.0348	450465	01.2114	450643	01.1272	450746	00.8605	460899	00.8299
450296	01.2140	450467	01.0246	450644	01.6626	450747	01.2985	470001	01.1473
450297	01.0456	450469	01.2376	450646	01.5649	450749	01.0704	470003	01.9465
450299	01.3424	450473	01.1206	450647	01.9196	450750	01.0195	470004	01.0515
450303	00.9316	450475	01.1437	450648	01.0951	450751	01.1697	470005	01.2251
450306	01.0047	450484	01.5403	450649	01.0285	450754	00.9348	470006	01.1808
450307	01.1066	450488	01.2257	450651	01.9084	450755	01.0689	470008	01.1580
450309	01.0272	450489	01.0301	450652	00.9396	450757	00.9415	470010	01.0586
450315	01.2144	450497	01.1558	450653	01.3471	450758	01.8121	470011	01.2368
450320	01.3125	450498	00.9930	450654	00.9660	450759	01.0510	470012	01.2403
450321	00.8001	450508	01.4382	450656	01.3679	450760	01.1575	470013	01.1382
450322	00.9636	450514	01.1062	450658	00.9752	450761	01.0542	470015	01.2499
450324	01.5206	450517	00.9731	450659	01.4577	450763	01.0749	470018	01.1680
450325	01.1968	450518	01.3150	450660	01.6676	450765	01.0577	470020	00.9978
450327	01.0394	450523	01.5970	450661	01.1988	450766	01.6749	470023	01.2061
450330	01.1114	450530	01.2979	450662	01.3698	450768	01.1035	470024	01.1033
450334	01.0556	450534	00.9871	450665	01.0241	450769	00.9400	490001	01.0797
450337	01.1329	450535	01.2339	450666	01.2497	450770	01.0568	490002	01.0695
450340	01.3477	450537	01.3542	450668	01.5758	450771	01.4336	490003	00.6320
450341	00.9829	450538	01.1629	450669	01.2851	450775	01.2567	490004	01.2387
450346	01.3132	450539	01.1476	450670	01.2810	450776	00.9218	490005	01.4484
450347	01.1759	450544	01.2656	450672	01.6188	450777	00.9251	490006	01.1253
450348	00.9955	450545	01.1075	450673	01.0416	450778	00.9503	490007	01.9942
450349	01.1709	450546	01.3436	450674	00.8683	450779	01.3022	490008	01.2137
450351	01.2881	450547	00.9623	450675	01.3833	450781	01.1594	490009	01.6347
450352	01.2172	450550	01.0995	450677	01.2639	450898	00.8237	490010	01.1456

PAGE 16 OF 17

Provider	Case mix	Provider	Case mix	Provider	Case mix	Provider	Case mix	Provider	Case mix
490011	01.3461	490108	00.8690	500061	01.0524	510023	01.0658	520031	01.1036
490012	01.0344	490109	00.8882	500062	00.9785	510024	01.3903	520032	01.1936
490013	01.1462	490110	01.2467	500064	01.5256	510025	00.9026	520033	01.2079
490014	01.6835	490111	01.1694	500065	01.2163	510026	00.9815	520034	01.2054
490015	01.4541	490112	01.5277	500068	01.0045	510027	01.0158	520035	01.2268
490017	01.3085	490113	01.2975	500069	01.0513	510028	01.1423	520037	01.6045
490018	01.1039	490114	01.0763	500071	01.3313	510029	01.2987	520038	01.2519
490019	01.1086	490115	01.2314	500072	01.1974	510030	01.1157	520039	01.0357
490020	01.1004	490116	01.1844	500073	00.9908	510031	01.3225	520040	01.3748
490021	01.4293	490117	01.1327	500074	01.1497	510033	01.2749	520041	01.1079
490022	01.2401	490118	01.6983	500075	01.2217	510035	01.0320	520042	01.1205
490023	01.2133	490119	01.3609	500076	01.2654	510036	01.0604	520044	01.3591
490024	01.6752	490120	01.3010	500077	01.2515	510038	01.0525	520045	01.6903
490027	01.0363	490122	01.1920	500078	01.2345	510039	01.3294	520047	01.0116
490028	01.2894	490123	01.1735	500079	01.2261	510040	01.0143	520048	01.3956
490030	01.3272	490124	01.1442	500080	00.8334	510043	00.9906	520049	01.9151
490031	01.0224	490126	01.2140	500084	01.1023	510046	01.2254	520051	02.0240
490032	01.6846	490127	01.0528	500085	01.0423	510047	01.1479	520053	01.0284
490033	01.1802	490129	00.8523	500086	01.3638	510048	01.1371	520054	01.1166
490035	01.0386	490130	01.1769	500088	01.3058	510050	01.2384	520056	01.2938
490037	01.1755	490131	00.9533	500089	00.9561	510053	00.9757	520057	01.1794
490038	01.2324	490898	00.8559	500090	00.9159	510055	01.1894	520058	01.0811
490040	01.4061	490899	00.8561	500092	01.0742	510058	01.1864	520059	01.1979
490041	01.1836	500001	01.2654	500094	00.9119	510059	01.1667	520060	01.2278
490042	01.2640	500002	01.4624	500096	01.0007	510060	01.1566	520062	01.2096
490043	01.2185	500003	01.2528	500097	01.2205	510061	01.0343	520063	01.1724
490044	01.2540	500005	01.7054	500098	00.9184	510062	01.1905	520064	01.5477
490045	01.1670	500007	01.3054	500101	00.9131	510063	01.0791	520066	01.2738
490046	01.3858	500008	01.8513	500102	00.9648	510065	01.0039	520068	00.9968
490047	01.1058	500009	01.2967	500104	01.1794	510066	01.1330	520069	01.1737
490048	01.4563	500011	01.2536	500106	01.0805	510067	01.1981	520070	01.3710
490050	01.3431	500012	01.4992	500107	01.1309	510068	01.1032	520071	01.1515
490052	01.4815	500014	01.7253	500108	01.6503	510070	01.1833	520074	01.0798
490053	01.2445	500015	01.2896	500110	01.2168	510071	01.2490	520075	01.4136
490054	01.0445	500016	01.3370	500118	01.1967	510072	01.0552	520076	01.1402
490057	01.4349	500019	01.2299	500119	01.2997	510076	00.9549	520077	00.9982
490059	01.4570	500021	01.4669	500122	01.2802	510077	01.1876	520078	01.4114
490060	01.0508	500023	01.2623	500123	01.0015	510080	01.0420	520082	01.2748
490063	01.6192	500024	01.5428	500124	01.2657	510081	01.0109	520083	01.5731
490066	01.2154	500025	01.8595	500125	00.9956	510082	00.9711	520084	01.0780
490067	01.2419	500026	01.3513	500127	00.9825	510084	00.9994	520087	01.5493
490069	01.3763	500027	01.5636	500129	01.6821	510085	01.2936	520088	01.2323
490071	01.4376	500028	01.0150	500132	00.9084	510086	01.1017	520089	01.5458
490073	01.3847	500029	01.0282	500134	00.6687	520002	01.2630	520090	01.1765
490074	01.3503	500030	01.3145	500135	01.0874	520003	01.1233	520091	01.2450
490075	01.2967	500031	01.2673	500137	00.8110	520004	01.2461	520092	01.1591
490077	01.1944	500033	01.2133	500138	05.7358	520006	01.0773	520094	01.1585
490079	01.2724	500035	01.4986	500139	01.3487	520007	01.0853	520095	01.3975
490083	00.7042	500036	01.2627	500140	01.2302	520008	01.3619	520096	01.4615
490084	01.1032	500037	01.2283	500141	01.2480	520009	01.5789	520097	01.3903
490085	01.1552	500039	01.3147	500143	00.6284	520010	01.1080	520098	01.7557
490088	01.1437	500041	01.2158	500898	00.8024	520011	01.1672	520100	01.2501
490089	01.0975	500042	01.3302	500899	00.8443	520012	00.9706	520101	01.1370
490090	01.2096	500043	01.2098	510001	01.6282	520013	01.3292	520102	01.1927
490091	01.1654	500044	01.8679	510002	01.2818	520014	01.1163	520103	01.3362
490092	01.2096	500045	01.1746	510004	00.9496	520015	01.1626	520107	01.2514
490093	01.2688	500048	00.9045	510005	00.9557	520016	01.0807	520109	01.0184
490094	01.1382	500049	01.1911	510006	01.2549	520017	01.2058	520110	01.0592
490095	01.2520	500050	01.3135	510007	01.4175	520018	01.0251	520111	01.0241
490097	01.0975	500051	01.6129	510008	01.0871	520019	01.3084	520112	01.1481
490098	01.3140	500052	01.2216	510009	01.0605	520021	01.2243	520113	01.1873
490099	00.9549	500053	01.2756	510012	01.0181	520024	01.1064	520114	01.0718
490100	01.3416	500054	01.8769	510013	01.1238	520025	01.0907	520115	01.2402
490101	01.1334	500055	01.1095	510015	00.9567	520026	01.0478	520116	01.2315
490104	00.9354	500057	01.3255	510016	01.0097	520027	01.1180	520117	01.0871
490105	00.7256	500058	01.4697	510018	01.0555	520028	01.3970	520118	00.9620
490106	00.8678	500059	01.1046	510020	01.0862	520029	00.9510	520120	01.0568
490107	01.2010	500060	01.3017	510022	01.6564	520030	01.5748	520121	00.9919

PAGE 17 OF 17

Provider	Case mix	Provider	Case mix	Provider	Case mix	Provider	Case mix	Provider	Case mix
520122	01.0130	520144	01.0364	520161	01.0330	530003	00.8796	530017	00.9848
520123	01.0173	520145	01.0112	520170	01.2579	530004	00.9320	530018	00.9947
520124	01.1117	520146	01.1620	520171	00.9793	530005	01.1532	530019	00.9900
520130	00.9745	520148	01.0927	520173	01.1033	530006	01.1493	530022	01.0950
520131	01.0552	520149	01.0520	520174	01.4214	530007	01.0519	530023	00.8916
520132	01.1941	520151	01.0856	520176	00.8365	530008	01.2328	530024	01.0250
520134	01.0987	520152	01.1365	520177	01.4778	530009	01.0236	530025	01.2723
520135	00.9722	520153	01.0085	520178	01.1582	530010	01.2737	530026	01.0529
520136	01.4972	520154	01.1165	520180	00.7304	530011	01.1401	530027	00.9495
520138	01.8587	520156	01.0321	520898	00.7870	530012	01.5951	530029	00.9014
520139	01.2485	520157	01.0779	520899	00.8299	530014	01.2190	530031	00.9405
520140	01.4834	520159	00.8579	530001	01.4040	530015	01.1436	530032	01.2902
520141	01.1483	520160	01.7555	530002	01.2218	530016	01.1974	530898	00.8089
520142	00.9572								

Note: Case mix indexes do not include discharges from PPS-exempt units. Case mix indexes include cases received in HCFA central office through June 1993.

TABLE 4A.—WAGE INDEX AND CAPITAL GEOGRAPHIC ADJUSTMENT FACTOR (GAF) FOR URBAN AREAS

Urban area (constituent counties or county equivalents)	Wage index	GAF
Abilene, TX	0.8830	0.9183
Taylor, TX		
Aguadilla, PR	0.5525	0.6661
Aguada, PR		
Aguadilla, PR		
Moca, PR		
Akron, OH	0.8122	0.8672
Portage, OH		
Summit, OH		
Albany, GA	0.8493	0.8942
Dougherty, GA		
Lee, GA		
Albany-Schenectady-Troy, NY	0.9033	0.9327
Albany, NY		
Montgomery, NY		
Rensselaer, NY		
Saratoga, NY		
Schenectady, NY		
Schoharie, NY		
Albuquerque, NM	0.9861	0.9905
Bernalillo, NM		
Sandoval, NM		
Valencia, NM		
Alexandria, LA	0.9130	0.9396
Rapides, LA		
Allentown-Bethlehem-Easton, PA	0.9973	0.9982
Carbon, PA		
Lehigh, PA		
Northampton, PA		
Altoona, PA	0.9342	0.9545
Blair, PA		
Amarillo, TX	0.8667	0.9067
Potter, TX		
Randall, TX		
Anchorage, AK	1.2201	1.1459
Anchorage, AK		
Ann Arbor, MI	1.2539	1.1676
Lenawee, MI		
Livingston, MI		
Washtenaw, MI		
Anniston, AL	0.7998	0.8581

TABLE 4A.—WAGE INDEX AND CAPITAL GEOGRAPHIC ADJUSTMENT FACTOR (GAF) FOR URBAN AREAS—Continued

Urban area (constituent counties or county equivalents)	Wage index	GAF
Calhoun, AL		
Appleton-Oshkosh-Neenah, WI	0.8743	0.9121
Calumet, WI		
Outagamie, WI		
Winnebago, WI		
Arecibo, PR	0.3705	0.5066
Arecibo, PR		
Camuy, PR		
Hatillo, PR		
Asheville, NC	0.9175	0.9427
Buncombe, NC		
Madison, NC		
Athens, GA	0.8324	0.8819
Clarke, GA		
Madison, GA		
Oconee, GA		
*Atlanta, GA	0.9402	0.9587
Barrow, GA		
Bartow, GA		
Carroll, GA		
Cherokee, GA		
Clayton, GA		
Cobb, GA		
Coweta, GA		
De Kalb, GA		
Douglas, GA		
Fayette, GA		
Forsyth, GA		
Fulton, GA		
Gwinnett, GA		
Henry, GA		
Newton, GA		
Paulding, GA		
Pickens, GA		
Rockdale, GA		
Spalding, GA		
Walton, GA		
Atlantic City-Cape May, NJ	1.0584	1.0396
Atlantic City , NJ		
Cape May, NJ		
Augusta-Aiken, GA-SC	0.8899	0.9232

TABLE 4A.—WAGE INDEX AND CAPITAL GEOGRAPHIC ADJUSTMENT FACTOR (GAF) FOR URBAN AREAS—Continued

Urban area (constituent counties or county equivalents)	Wage index	GAF
Columbia, GA		
McDuffie, GA		
Richmond, GA		
Aiken, SC		
Edgefield, SC		
Austin-San Marcos, TX	0.9209	0.9451
Bastrop, TX		
Caldwell, TX		
Hays, TX		
Travis, TX		
Williamson, TX		
Bakersfield, CA	1.0857	1.0579
Kern, CA		
*Baltimore, MD	1.0036	1.0025
Anne Arundel, MD		
Baltimore, MD		
Baltimore City, MD		
Carroll, MD		
Harford, MD		
Howard, MD		
Queen Annes, MD		
Bangor, ME	0.9191	0.9439
Penobscot		
Barnstable-Yarmouth, MA	1.3351	1.2189
Barnstable, MA		
Baton Rouge, LA	0.8659	0.9061
Ascension, LA		
East Baton Rouge, LA		
Livingston, LA		
West Baton Rouge, LA		
Beaumont-Port Arthur, TX	0.8934	0.9257
Hardin, TX		
Jefferson, TX		
Orange, TX		
Bellingham, WA	1.1147	1.0772
Whatcom, WA		
Benton Harbor, MI	0.7923	0.8526
Berrien, MI		
*Bergen-Passaic, NJ	1.1331	1.0893
Bergen, NJ		
Passaic, NJ		
Billings, MT	0.8992	0.9298

TABLE 4A.—WAGE INDEX AND CAPITAL GEOGRAPHIC ADJUSTMENT FACTOR (GAF) FOR URBAN AREAS—Continued

Urban area (constituent counties or county equivalents)	Wage index	GAF
Yellowstone, MT		
Biloxi-Gulfport-Pascagoula, MS	0.8056	0.8624
Hancock, MS		
Harrison, MS		
Jackson, MS		
Binghamton, NY	0.9098	0.9373
Broome, NY		
Tioga, NY		
Birmingham, AL	0.9006	0.9308
Blount, AL		
Jefferson, AL		
St. Clair, AL		
Shelby, AL		
Bismarck, ND	0.8759	0.9133
Burleigh, ND		
Morton, ND		
Bloomington, IN	0.8525	0.8965
Monroe, IN		
Bloomington-Normal, IL	0.8566	0.8994
McLean, IL		
Boise City, ID	0.8883	0.9221
Ada, ID		
Canyon, ID		
*Boston-Brockton-Nashua, MA-NH	1.1503	1.1006
Bristol, MA		
Essex, MA		
Middlesex, MA		
Norfolk, MA		
Plymouth, MA		
Suffolk, MA		
Worcester, MA		
Hillsborough, NH		
Merrimack, NH		
Rockingham, NH		
Strafford, NH		
Boulder-Longmont, CO	0.8197	0.8727
Boulder, CO		
Brazoria, TX	0.8655	0.9058
Brazoria, TX		
Bremerton, WA	0.9529	0.9675
Kitsap, WA		
Brownsville-Harlingen-San Benito, TX	0.8479	0.8932
Cameron, TX		
Bryan-College Station, TX	0.9054	0.9342
Brazos, TX		
*Buffalo-Niagara Falls, NY	0.9117	0.9387
Erie, NY		
Niagara, NY		
Burlington, VT	0.9458	0.9626
Chittenden, VT		
Franklin, VT		
Grand Isle, VT		
Caguas, PR	0.5039	0.6254
Caguas, PR		
Cayey, PR		
Cidra, PR		
Gurabo, PR		
San Lorenzo, PR		
Canton-Massillon, OH	0.8718	0.9103
Carroll, OH		
Stark, OH		
Casper, WY	0.8408	0.8880
Natrona, WY		
Cedar Rapids, IA	0.8475	0.8929
Linn, IA		
Champaign-Urbana, IL	0.8720	0.9105
Champaign, IL		
Charleston-North Charleston, SC	0.8947	0.9266
Berkeley, SC		
Charleston, SC		
Dorchester, SC		
Charleston, WV	0.8786	0.9152
Kanawha, WV		
Putnam, WV		
*Charlotte-Gastonia-Rock Hill, NC-SC	0.9648	0.9758
Cabarrus, NC		
Gaston, NC		
Lincoln, NC		
Mecklenburg, NC		
Rowan, NC		
Union, NC		
York, SC		
Charlottesville, VA	0.9477	0.9639
Albemarle, VA		
Charlottesville City, VA		
Fluvanna, VA		
Greene, VA		
Chattanooga, TN-GA	0.9088	0.9366
Catoosa, GA		
Dade, GA		
Walker, GA		
Hamilton, TN		
Marion, TN		
Cheyenne, WY	0.7538	0.8240
Laramie, WY		
*Chicago, IL	1.0593	1.0402
Cook, IL		
De Kalb, IL		
Du Page, IL		
Grundy, IL		
Kane, IL		
Kendall, IL		
Lake, IL		
McHenry, IL		
Will, IL		
Chico-Paradise, CA	1.0071	1.0049
Butte, CA		
*Cincinnati, OH-KY-IN	0.9548	0.9688
Dearborn, IN		
Ohio, IN		
Boone, KY		
Campbell, KY		
Gallatin, KY		
Grant, KY		
Kenton, KY		
Pendleton, KY		
Brown, OH		
Clermont, OH		
Hamilton, OH		
Warren, OH		
Clarksville-Hopkinsville, TN-KY	0.6826	0.7699
Christian, KY		
Montgomery, TN		
*Cleveland-Lorain-Elyria, OH	0.9817	0.9874
Ashtabula, OH		
Cuyahoga, OH		
Geauga, OH		
Lake, OH		
Lorain, OH		
Medina, OH		
Colorado Springs, CO	0.9464	0.9630
El Paso, CO		
Columbia, MO	0.9312	0.9524
Boone, MO		
Columbia, SC	0.8851	0.9198
Lexington, SC		
Richland, SC		
Columbus, GA-AL	0.7562	0.8258
Russell, AL		
Chattanoochee, GA		
Harris, GA		
Muscogee, GA		
*Columbus, OH	0.9902	0.9933
Delaware, OH		
Fairfield, OH		
Franklin, OH		
Licking, OH		
Madison, OH		
Pickaway, OH		
Corpus Christi, TX	0.8334	0.8827
Nueces, TX		
San Patricio, TX		
Cumberland, MD-WV	0.8103	0.8658
Allegany, MD		
Mineral, WV		
*Dallas, TX	0.9649	0.9758
Collin, TX		
Dallas, TX		
Denton, TX		
Ellis, TX		
Henderson, TX		
Hunt, TX		
Kaufman, TX		
Rockwall, TX		
Danville, VA	0.7881	0.8495
Danville City, VA		
Pittsylvania, VA		
Davenport-Rock Island-Moline, IA-IL	0.8300	0.8802
Scott, IA		
Henry, IL		
Rock Island, IL		
Dayton-Springfield, OH	0.9424	0.9602
Clark, OH		
Greene, OH		
Miami, OH		
Montgomery, OH		
Daytona Beach, FL	0.8826	0.9180
Flagler, FL		
Volusia, FL		
Decatur, AL	0.7995	0.8579
Lawrence, AL		
Morgan, AL		
Decatur, IL	0.8011	0.8591
Macon, IL		
*Denver, CO	1.0935	1.0631

TABLE 4A.—WAGE INDEX AND CAPITAL GEOGRAPHIC ADJUSTMENT FACTOR (GAF) FOR URBAN AREAS—Continued

Urban area (constituent counties or county equivalents)	Wage index	GAF
Adams, CO		
Arapahoe, CO		
Denver, CO		
Douglas, CO		
Jefferson, CO		
Des Moines, IA	0.8676	0.9073
Dallas, IA		
Polk, IA		
Warren, IA		
*Detroit, MI	1.0790	1.0534
Lapeer, MI		
Macomb, MI		
Monroe, MI		
Oakland, MI		
St. Clair, MI		
Wayne, MI		
Dothan, AL	0.7793	0.8430
Dale, AL		
Houston, AL		
Dover, DE	0.8728	0.9110
Kent, DE		
Dubuque, IA	0.8324	0.8819
Dubuque, IA		
Duluth-Superior, MN-WI	0.9166	0.9421
St. Louis, MN		
Douglas, WI		
Dutchess County, NY	1.0623	1.0423
Dutchess, NY		
Eau Claire, WI	0.8481	0.8933
Chippewa, WI		
Eau Claire, WI		
El Paso, TX	0.9537	0.9681
El Paso, TX		
Elkhart-Goshen, IN	0.8560	0.8990
Elkhart, IN		
Elmira, NY	0.8558	0.8989
Chemung, NY		
Enid, OK	0.7985	0.8572
Garfield, OK		
Erie, PA	0.9169	0.9423
Erie, PA		
Eugene-Springfield, OR	0.9480	0.9641
Lane, OR		
Evansville-Henderson, IN-KY	0.8904	0.9236
Posey, IN		
Vanderburgh, IN		
Warrick, IN		
Henderson, KY		
Fargo-Moorhead, ND-MN	0.9557	0.9694
Clay, MN		
Cass, ND		
Fayetteville, NC	0.8519	0.8960
Cumberland, NC		
Fayetteville-Springdale-Rogers, AR	0.7247	0.8021
Benton, AR		
Washington, AR		
Flint, MI	1.0689	1.0467
Genesee, MI		
Florence, AL	0.7707	0.8366
Colbert, AL		
Lauderdale, AL		
Florence, SC	0.8671	0.9070
Florence, SC		
Fort Collins-Loveland, CO	0.9885	0.9921
Larimer, CO		
*Ft. Lauderdale, FL	1.0573	1.0389
Broward, FL		
Fort Myers-Cape Coral, FL	0.9279	0.9500
Lee, FL		
Fort Pierce-Port St. Lucie, FL	1.0477	1.0324
Martin, FL		
St. Lucie, FL		
Fort Smith, AR-OK	0.7611	0.8295
Crawford, AR		
Sebastian, AR		
Sequoyah, OK		
Fort Walton Beach, FL	0.8825	0.9180
Okaloosa, FL		
Fort Wayne, IN	0.8893	0.9228
Adams, IN		
Allen, IN		
De Kalb, IN		
Huntington, IN		
Wells, IN		
Whitley, IN		
*Fort Worth-Arlington, TX	0.9550	0.9690
Hood, TX		
Johnson, TX		
Parker, TX		
Tarrant, TX		
Fresno, CA	1.0244	1.0166
Fresno, CA		
Madera, CA		
Gadsden, AL	0.7747	0.8396
Etowah, AL		
Gainesville, FL	0.8911	0.9241
Alachua, FL		
Galveston-Texas City, TX	0.9865	0.9907
Galveston, TX		
Gary, IN	0.8740	0.9119
Lake, IN		
Porter, IN		
Glens Falls, NY	0.9393	0.9580
Warren, NY		
Washington, NY		
Goldsboro, NC	0.8399	0.8874
Wayne, NC		
Grand Forks, ND-MN	0.8795	0.9158
Polk, MN		
Grand Forks, ND		
Grand Rapids-Muskegon-Holland, MI	0.9764	0.9838
Allegan, MI		
Kent, MI		
Muskegon, MI		
Ottawa, MI		
Great Falls, MT	0.8906	0.9237
Cascade, MT		
Greeley, CO	0.8714	0.9100
Weld, CO		
Green Bay, WI	0.8852	0.9199
Brown, WI		
*Greensboro-Winston-Salem-High Point, NC	0.9283	0.9503
Alamance, NC		
Davidson, NC		
Davie, NC		
Forsyth, NC		
Guilford, NC		
Randolph, NC		
Stokes, NC		
Yadkin, NC		
Greenville, NC	0.9331	0.9537
Pitt, NC		
Greenville-Spartanburg-Anderson, SC	0.8715	0.9101
Anderson, SC		
Cherokee, SC		
Greenville, SC		
Pickens, SC		
Spartanburg, SC		
Hagerstown, MD	0.8830	0.9183
Washington, MD		
Hamilton-Middletown, OH	0.8122	0.8672
Butler, OH		
Harrisburg-Lebanon-Carlisle, PA	0.9995	0.9997
Cumberland, PA		
Dauphin, PA		
Lebanon, PA		
Perry, PA		
*Hartford, CT	1.2086	1.1385
Hartford, CT		
Litchfield, CT		
Middlesex, CT		
Tolland, CT		
Hickory-Morganton, NC	0.8800	0.9162
Alexander, NC		
Burke, NC		
Caldwell, NC		
Catawba, NC		
Honolulu, HI	1.0995	1.0671
Honolulu, HI		
Houma, LA	0.7765	0.8409
Lafourche, LA		
Terrebonne, LA		
*Houston, TX	0.9908	0.9937
Chambers, TX		
Fort Bend, TX		
Harris, TX		
Liberty, TX		
Montgomery, TX		
Waller, TX		
Huntington-Ashland, WV-KY-OH	0.8971	0.9283
Boyd, KY		
Carter, KY		
Greenup, KY		
Lawrence, OH		
Cabell, WV		
Wayne, WV		
Huntsville, AL	0.8158	0.8699
Limestone, AL		
Madison, AL		
*Indianapolis, IN	0.9871	0.9911

TABLE 4A.—WAGE INDEX AND CAPITAL GEOGRAPHIC ADJUSTMENT FACTOR (GAF) FOR URBAN AREAS—Continued

Urban area (constituent counties or county equivalents)	Wage index	GAF
Boone, IN		
Hamilton, IN		
Hancock, IN		
Hendricks, IN		
Johnson, IN		
Madison, IN		
Marion, IN		
Morgan, IN		
Shelby, IN		
Iowa City, IA	0.9706	0.9798
Johnson, IA		
Jackson, MI	0.9277	0.9499
Jackson, MI		
Jackson, MS	0.7519	0.8226
Hinds, MS		
Madison, MS		
Rankin, MS		
Jackson, TN	0.8007	0.8588
Madison, TN		
Jacksonville, FL	0.8968	0.9281
Clay, FL		
Duval, FL		
Nassau, FL		
St. Johns, FL		
Jacksonville, NC	0.7197	0.7983
Onslow, NC		
Jamestown, NY	0.7688	0.8352
Chautaqua, NY		
Janesville-Beloit, WI	0.8415	0.8885
Rock, WI		
Jersey City, NJ	1.0966	1.0652
Hudson, NJ		
Johnson City-Kingsport-Bristol, TN-VA	0.8472	0.8927
Carter, TN		
Hawkins, TN		
Sullivan, TN		
Unicoi, TN		
Washington, TN		
Bristol City, VA		
Scott, VA		
Washington, VA		
Johnstown, PA	0.8784	0.9150
Cambria, PA		
Somerset, PA		
Joplin, MO	0.7697	0.8359
Jasper, MO		
Newton, MO		
Kalamazoo-Battlecreek, MI	1.0945	1.0638
Calhoun, MI		
Kalamazoo, MI		
Van Buren, MI		
Kankakee, IL	0.8458	0.8916
Kankakee, IL		
*Kansas City, KS-MO	0.9538	0.9681
Johnson, KS		
Leavenworth, KS		
Miami, KS		
Wyandotte, KS		
Cass, MO		
Clay, MO		
Clinton, MO		
Jackson, MO		
Lafayette, MO		
Platte, MO		
Ray, MO		
Kenosha, WI	0.8846	0.9195
Kenosha, WI		
Killeen-Temple, TX	1.0169	1.0115
Bell, TX		
Coryell, TX		
Knoxville, TN	0.9247	0.9478
Anderson, TN		
Blount, TN		
Knox, TN		
Loudon, TN		
Sevier, TN		
Union, TN		
Kokomo, IN	0.8616	0.9030
Howard, IN		
Tipton, IN		
La Crosse, WI-MN	0.8409	0.8881
Houston, MN		
La Crosse, WI		
Lafayette, LA	0.8144	0.8688
Acadia, LA		
Lafayette, LA		
St. Landry, LA		
St. Martin, LA		
Lafayette, IN	0.8415	0.8885
Clinton, IN		
Tippecanoe, IN		
Lake Charles, LA	0.8134	0.8681
Calcasieu, LA		
Lakeland-Winter Haven, FL	0.8335	0.8827
Polk, FL		
Lancaster, PA	0.9520	0.9669
Lancaster, PA		
Lansing-East Lansing, MI	0.9633	0.9747
Clinton, MI		
Eaton, MI		
Ingham, MI		
Laredo, TX	0.6953	0.7797
Webb, TX		
Las Cruces, NM	0.8919	0.9246
Dona Ana, NM		
Las Vegas, NV-AZ	1.0714	1.0484
Mohave, AZ		
Clark, NV		
Nye, NV		
Lawrence, KS	0.8793	0.9157
Douglas, KS		
Lawton, OK	0.8453	0.8913
Comanche, OK		
Lewiston-Auburn, ME	0.9644	0.9755
Androscoggin, ME		
Lexington, KY	0.8291	0.8796
Bourbon, KY		
Clark, KY		
Fayette, KY		
Jessamine, KY		
Madison, KY		
Scott, KY		
Woodford, KY		
Lima, OH	0.8441	0.8904
Allen, OH		
Auglaize, OH		
Lincoln, NE	0.8904	0.9236
Lancaster, NE		
Little Rock-North Little Rock, AR	0.8306	0.8806
Faulkner, AR		
Lonoke, AR		
Pulaski, AR		
Saline, AR		
Longview-Marshall, TX	0.8720	0.9105
Gregg, TX		
Harrison, TX		
Upshur, TX		
*Los Angeles-Long Beach, CA	1.2719	1.1790
Los Angeles, CA		
Louisville, KY-IN	0.9407	0.9590
Clark, IN		
Floyd, IN		
Harrison, IN		
Scott, IN		
Bullitt, KY		
Jefferson, KY		
Oldham, KY		
Lubbock, TX	0.8678	0.9075
Lubbock, TX		
Lynchburg, VA	0.8226	0.8748
Amherst, VA		
Bedford City, VA		
Bedford, VA		
Campbell, VA		
Lynchburg City, VA		
Macon, GA	0.9704	0.9796
Bibb, GA		
Houston, GA		
Jones, GA		
Peach, GA		
Twiggs, GA		
Madison, WI	0.9977	0.9984
Dane, WI		
Mansfield, OH	0.8158	0.8699
Crawford, OH		
Richland, OH		
Mayaguez, PR	0.5397	0.6555
Anasco, PR		
Cabo Rojo, PR		
Hormigueros, PR		
Mayaguez, PR		
Sabana Grande, PR		
San German, PR		
McAllen-Edinburg-Mission, TX	0.8497	0.8945
Hidalgo, TX		
Medford-Ashland, OR	0.9768	0.9841
Jackson, OR		
Melbourne-Titusville-Palm Bay, FL	0.9356	0.9554

TABLE 4A.—WAGE INDEX AND CAPITAL GEOGRAPHIC ADJUSTMENT FACTOR (GAF) FOR URBAN AREAS—Continued

Urban area (constituent counties or county equivalents)	Wage index	GAF
Brevard, FL		
*Memphis, TN-AR-MS	0.8546	0.8980
Crittenden, AR		
De Soto, MS		
Fayette, TN		
Shelby, TN		
Tipton, TN		
Merced, CA	1.0021	1.0014
Merced, CA		
*Miami, FL	0.8515	0.8958
Dade, FL		
*Middlesex-Somerset-Hunterdon, NJ	1.0871	1.0589
Hunterdon, NJ		
Middlesex, NJ		
Somerset, NJ		
*Milwaukee, WI	0.9240	0.9473
Milwaukee, WI		
Ozaukee, WI		
Washington, WI		
Waukesha, WI		
*Minneapolis-St. Paul, MN-WI	1.0855	1.0578
Anoka, MN		
Carver, MN		
Chisago, MN		
Dakota, MN		
Hennepin, MN		
Isanti, MN		
Ramsey, MN		
Scott, MN		
Sherburne, MN		
Washington, MN		
Wright, MN		
Pierce, WI		
St. Croix, WI		
Mobile, AL	0.7801	0.8436
Baldwin, AL		
Mobile, AL		
Modesto, CA	1.1471	1.0985
Stanislaus, CA		
Monmouth-Ocean, NJ	1.0082	1.0056
Monmouth, NJ		
Ocean, NJ		
Monroe, LA	0.7663	0.8334
Ouachita, LA		
Montgomery, AL	0.7564	0.8260
Autauga, AL		
Elmore, AL		
Montgomery, AL		
Muncie, IN	0.8546	0.8980
Delaware, IN		
Myrtle Beach, SC	0.7906	0.8514
Horry, SC		
Naples, FL	0.9646	0.9756
Collier, FL		
*Nashville, TN	0.9105	0.9378
Cheatham, TN		
Davidson, TN		
Dickson, TN		
Robertson, TN		
Rutherford TN		
Sumner, TN		
Williamson, TN		
Wilson, TN		
*Nassau-Suffolk, NY	1.2855	1.1877
Nassau, NY		
Suffolk, NY		
*New Haven-Bridgeport-Stamford-Danbury-Waterbury, CT	1.2289	1.1516
Fairfield, CT		
New Haven, CT		
New London-Norwich, CT	1.1589	1.1063
New London, CT		
*New Orleans, LA	0.9443	0.9615
Jefferson, LA		
Orleans, LA		
Plaquemines, LA		
St. Bernard, LA		
St. Charles, LA		
St. James, LA		
St. John The Baptist, LA		
St. Tammany, LA		
*New York, NY	1.4020	1.2604
Bronx, NY		
Kings, NY		
New York, NY		
Putnam, NY		
Queens, NY		
Richmond, NY		
Rockland, NY		
Westchester, NY		
*Newark, NJ	1.1145	1.0771
Essex, NJ		
Morris, NJ		
Sussex, NJ		
Union, NJ		
Warren, NJ		
Newburgh, NY-PA	0.8560	0.8990
Orange, NY		
Pike, PA		
*Norfolk-Virginia Beach-Newport News, VA-NC	0.8541	0.8976
Currituck, NC		
Chesapeake City, VA		
Gloucester, VA		
Hampton City, VA		
Isle of Wight, VA		
James City, VA		
Mathews, VA		
Newport News City, VA		
Norfolk City, VA		
Poquoson City, VA		
Portsmouth City, VA		
Suffolk City, VA		
Virginia Beach City VA		
Williamsburg City, VA		
York, VA		
*Oakland, CA	1.4369	1.2818
Alameda, CA		
Contra Costa, CA		
Ocala, FL	0.8490	0.8940
Marion, FL		
Odessa-Midland, TX	0.8735	0.9115
Ector, TX		
Midland, TX		
Oklahoma City, OK	0.8455	0.8914
Canadian, OK		
Cleveland, OK		
Logan, OK		
McClain, OK		
Oklahoma, OK		
Pottawatomie, OK		
Olympia, WA	1.0326	1.0222
Thurston, WA		
Omaha, NE-IA	0.9900	0.9931
Pottawattamie, IA		
Cass, NE		
Douglas, NE		
Sarpy, NE		
Washington, NE		
*Orange County, CA	1.3409	1.2225
Orange, CA		
*Orlando, FL	0.9782	0.9850
Lake, FL		
Orange, FL		
Osceola, FL		
Seminole, FL		
Owensboro, KY	0.7654	0.8327
Daviess, KY		
Panama City, FL	0.8359	0.8845
Bay, FL		
Parkersburg-Marietta, WV-OH	0.7748	0.8397
Washington, OH		
Wood, WV		
Pensacola, FL	0.8429	0.8896
Escambia, FL		
Santa Rosa, FL		
Peoria-Pekin, IL	0.8365	0.8849
Peoria, IL		
Tazewell, IL		
Woodford, IL		
*Philadelphia, PA-NJ	1.1265	1.0850
Burlington, NJ		
Camden, NJ		
Gloucester, NJ		
Salem, NJ		
Bucks, PA		
Chester, PA		
Delaware, PA		
Montgomery, PA		
Philadelphia, PA		
*Phoenix-Mesa, AZ	1.0223	1.0152
Maricopa, AZ		
Pinal AZ		
Pine Bluff, AR	0.8714	0.9100
Jefferson, AR		
*Pittsburgh, PA	0.9950	0.9966
Allegheny, PA		
Beaver, PA		
Butler, PA		
Fayette, PA		
Washington, PA		
Westmoreland, PA		
Pittsfield, MA	1.1001	1.0675
Berkshire, MA		
Ponce, PR	0.5167	0.6362

TABLE 4A.—WAGE INDEX AND CAPITAL GEOGRAPHIC ADJUSTMENT FACTOR (GAF) FOR URBAN AREAS—Continued

Urban area (constituent counties or county equivalents)	Wage index	GAF
Guayanilla, PR		
Juana Diaz, PR		
Penuelas, PR		
Ponce, PR		
Villalba, PR		
Yauco, PR		
Portland, ME	0.9381	0.9572
Cumberland, ME		
Sagadahoc, ME		
York, ME		
*Portland-Vancouver, OR-WA	1.1051	1.0708
Clackamas, OR		
Columbia, OR		
Multnomah, OR		
Washington, OR		
Yamhill, OR		
Clark, WA		
*Providence-Warwick, RI	1.0717	1.0486
Bristol, RI		
Kent, RI		
Newport, RI		
Providence, RI		
Washington, RI		
Provo-Orem, UT	0.9960	0.9973
Utah, UT		
Pueblo, CO	0.8260	0.8773
Pueblo, CO		
Punta Gorda, FL	0.9133	0.9398
Charlotte, FL		
Racine, WI	0.8298	0.8801
Racine, WI		
Raleigh-Durham-Chapel Hill, NC	0.9521	0.9669
Chatham, NC		
Durham, NC		
Franklin, NC		
Johnston, NC		
Orange, NC		
Wake, NC		
Rapid City, SD	0.8220	0.8744
Pennington, SD		
Reading, PA	0.9082	0.9362
Berks, PA		
Redding, CA	1.1622	1.1084
Shasta, CA		
Reno, NV	1.2009	1.1336
Washoe, NV		
Richland-Kennewick-Pasco, WA	0.9214	0.9455
Benton, WA		
Franklin, WA		
Richmond-Petersburg, VA	0.8801	0.9163

TABLE 4A.—WAGE INDEX AND CAPITAL GEOGRAPHIC ADJUSTMENT FACTOR (GAF) FOR URBAN AREAS—Continued

Urban area (constituent counties or county equivalents)	Wage index	GAF
Charles City County, VA		
Chesterfield, VA		
Colonial Heights City, VA		
Dinwiddie, VA		
Goochland, VA		
Hanover, VA		
Henrico, VA		
Hopewell City, VA		
New Kent, VA		
Petersburg City, VA		
Powhatan, VA		
Prince George, VA		
Richmond City, VA		
*Riverside-San Bernardino, CA	1.2021	1.1343
Riverside, CA		
San Bernardino, CA		
Roanoke, VA	0.8358	0.8844
Botetourt, VA		
Roanoke, VA		
Roanoke City, VA		
Salem City, VA		
Rochester, MN	1.0078	1.0053
Olmsted, MN		
*Rochester, NY	0.9761	0.9836
Genesee, NY		
Livingston, NY		
Monroe, NY		
Ontario, NY		
Orleans, NY		
Wayne, NY		
Rockford, IL	0.8708	0.9096
Boone, IL		
Ogle, IL		
Winnebago, IL		
Rocky Mount, NC	0.8743	0.9121
Edgecombe, NC		
Nash, NC		
*Sacramento, CA	1.2165	1.1436
El Dorado, CA		
Placer, CA		
Sacramento, CA		
Saginaw-Bay City-Midland, MI	0.9549	0.9689
Bay, MI		
Midland, MI		
Saginaw, MI		
St. Cloud, MN	0.9825	0.9880
Benton, MN		
Stearns, MN		
St. Joseph, MO	0.8811	0.9170
Andrews, MO		
Buchanan, MO		
*St. Louis, MO-IL	0.9192	0.9439

TABLE 4A.—WAGE INDEX AND CAPITAL GEOGRAPHIC ADJUSTMENT FACTOR (GAF) FOR URBAN AREAS—Continued

Urban area (constituent counties or county equivalents)	Wage index	GAF
Clinton, IL		
Jersey, IL		
Madison, IL		
Monroe, IL		
St. Clair, IL		
Franklin, MO		
Jefferson, MO		
Lincoln, MO		
St. Charles, MO		
St. Louis, MO		
St. Louis City, MO		
Warren, MO		
Salem, OR	0.9443	0.9615
Marion, OR		
Polk, OR		
Salinas, CA	1.3187	1.2086
Monterey, CA		
*Salt Lake City-Ogden, UT	0.9669	0.9772
Davis, UT		
Salt Lake, UT		
Weber, UT		
San Angelo, TX	0.7887	0.8500
Tom Green, TX		
*San Antonio, TX	0.8210	0.8737
Bexar, TX		
Comal, TX		
Guadalupe, TX		
Wilson, TX		
*San Diego, CA	1.1908	1.1270
San Diego, CA		
*San Francisco, CA	1.4086	1.2644
Marin, CA		
San Francisco, CA		
San Mateo, CA		
*San Jose, CA	1.4254	1.2747
Santa Clara, CA		
*San Juan-Bayamon, PR	0.4969	0.6194
Aguas Buenas, PR		
Barceloneta, PR		
Bayamon, PR		
Canovanas, PR		
Carolina, PR		
Catano, PR		
Ceiba, PR		
Comerio, PR		
Corozal, PR		
Dorado, PR		
Fajardo, PR		
Florida, PR		
Guaynabo, PR		
Humacao, PR		
Juncos, PR		
Los Piedras, PR		
Loiza, PR		
Luguillo, PR		
Manati, PR		
Naranjito, PR		
Rio Grande, PR		
San Juan, PR		
Toa Alta, PR		
Toa Baja, PR		
Trujillo Alto, PR		
Vega Alta, PR		
Vega Baja, PR		
Yabucoa, PR		

TABLE 4A.—WAGE INDEX AND CAPITAL GEOGRAPHIC ADJUSTMENT FACTOR (GAF) FOR URBAN AREAS—Continued

Urban area (constituent counties or county equivalents)	Wage index	GAF
San Luis Obispo-Atascadero-Paso Robles, CA	1.2505	1.1654
San Luis Obispo		
Santa Barbara-Santa Maria-Lompoc, CA	1.1637	1.1094
Santa Barbara, CA		
Santa Cruz-Watsonville, CA	0.9727	0.9812
Santa Cruz, CA		
Santa Fe, NM	0.9985	0.9990
Los Alamos, NM		
Santa Fe, NM		
Santa Rosa, CA	1.3084	1.2021
Sonoma, CA		
Sarasota-Bradenton, FL	0.9712	0.9802
Manatee, FL		
Sarasota, FL		
Savannah, GA	0.8675	0.9072
Bryan, GA		
Chatham, GA		
Effingham, GA		
Scranton—Wilkes-Barre—Hazleton, PA	0.8605	0.9022
Columbia, PA		
Lackawanna, PA		
Luzerne, PA		
Wyoming, PA		
*Seattle-Bellevue-Everett, WA	1.0985	1.0664
Island, WA		
King, WA		
Snohomish, WA		
Sharon, PA	0.8885	0.9222
Mercer, PA		
Sheboygan, WI	0.8229	0.8750
Sheboygan, WI		
Sherman-Denison, TX	0.8912	0.9242
Grayson, TX		
Shreveport-Bossier City, LA	0.8967	0.9281
Bossier, LA		
Caddo, LA		
Webster, LA		
Sioux City, IA-NE	0.8537	0.8973
Woodbury, IA		
Dakota, NE		
Sioux Falls, SD	0.8719	0.9104
Lincoln, SD		
Minnehaha, SD		
South Bend, IN	0.9486	0.9645
St. Joseph, IN		
Spokane, WA	1.0170	1.0116
Spokane, WA		
Springfield, IL	0.8727	0.9110
Menard, IL		
Sangamon, IL		
Springfield, MO	0.7866	0.8484
Christian, MO		
Greene, MO		
Webster, MO		
Springfield, MA	1.0320	1.0218
Hampden, MA		
Hampshire, MA		
State College, PA	0.9446	0.9617

TABLE 4A.—WAGE INDEX AND CAPITAL GEOGRAPHIC ADJUSTMENT FACTOR (GAF) FOR URBAN AREAS—Continued

Urban area (constituent counties or county equivalents)	Wage index	GAF
Centre, PA		
Steubenville-Weirton, OH-WV	0.8013	0.8592
Jefferson, OH		
Brooke, WV		
Hancock, WV		
Stockton-Lodi, CA	1.1147	1.0772
San Joaquin, CA		
Sumter, SC	0.7691	0.8355
Sumter, SC		
Syracuse, NY	0.9869	0.9910
Cayuga, NY		
Madison, NY		
Onondaga, NY		
Oswego, NY		
Tacoma, WA	1.0165	1.0113
Pierce, WA		
Tallahassee, FL	0.8339	0.8830
Gadsden, FL		
Leon, FL		
*Tampa-St. Petersburg-Clearwater, FL	0.9351	0.9551
Hernando, FL		
Hillsborough, FL		
Pasco, FL		
Pinellas, FL		
Terre Haute, IN	0.8599	0.9018
Clay, IN		
Vermillion, IN		
Vigo, IN		
Texarkana, AR-Texarkana, TX	0.8085	0.8645
Miller, AR		
Bowie, TX		
Toledo, OH	0.9970	0.9979
Fulton, OH		
Lucas, OH		
Wood, OH		
Topeka, KS	0.9221	0.9460
Shawnee, KS		
Trenton, NJ	1.0103	1.0070
Mercer, NJ		
Tucson, AZ	0.9843	0.9892
Pima, AZ		
Tulsa, OK	0.8311	0.8810
Creek, OK		
Osage, OK		
Rogers, OK		
Tulsa, OK		
Wagoner, OK		
Tuscaloosa, AL	0.8511	0.8955
Tuscaloosa, AL		
Tyler, TX	0.9119	0.9388
Smith, TX		
Utica-Rome, NY	0.8705	0.9094
Herkimer, NY		
Oneida, NY		
Vallejo-Fairfield-Napa, CA	1.2013	1.1338
Napa, CA		
Solano, CA		
Ventura, CA	1.2161	1.1434
Ventura, CA		
Victoria, TX	0.8928	0.9253
Victoria, TX		
Vineland-Millville-Bridgeton, NJ	1.0046	1.0031

TABLE 4A.—WAGE INDEX AND CAPITAL GEOGRAPHIC ADJUSTMENT FACTOR (GAF) FOR URBAN AREAS—Continued

Urban area (constituent counties or county equivalents)	Wage index	GAF
Cumberland, NJ		
Visalia-Tulare-Porterville, CA	1.0667	1.0452
Tulare, CA		
Waco, TX	0.7748	0.8397
McLennan, TX		
*Washington, DC-MD-VA-WV	1.0828	1.0560
District of Columbia, DC		
Calvert, MD		
Charles, MD		
Frederick, MD		
Montgomery, MD		
Prince Georges, MD		
Alexandria City, VA		
Arlington, VA		
Clarke, VA		
Culpepper, VA		
Fairfax, VA		
Fairfax City, VA		
Falls Church City, VA		
Fauquier, VA		
Fredericksburg City, VA		
King George, VA		
Loudoun, VA		
Manassas City, VA		
Manassas Park City, VA		
Prince William, VA		
Spotsylvania, VA		
Stafford, VA		
Warren, VA		
Berkeley, WV		
Jefferson, WV		
Waterloo-Cedar Falls, IA	0.8726	0.9109
Black Hawk, IA		
Wausau, WI	0.9774	0.9845
Marathon, WI		
West Palm Beach-Boca Raton, FL	1.0254	1.0173
Palm Beach, FL		
Wheeling, OH-WV	0.7694	0.8357
Belmont, OH		
Marshall, WV		
Ohio, WV		
Wichita, KS	0.9777	0.9847
Butler, KS		
Harvey, KS		
Sedgwick, KS		
Wichita Falls, TX	0.7951	0.8547
Archer, TX		
Wichita, TX		
Williamsport, PA	0.8503	0.8949
Lycoming, PA		
Wilmington-Newark, DE-MD	1.0667	1.0452
New Castle, DE		
Cecil, MD		
Wilmington, NC	0.9037	0.9330
New Hanover, NC		
Brunswick, NC		
Yakima, WA	0.9421	0.9600
Yakima, WA		
Yolo, CA	1.1391	1.0933
Yolo, CA		
York, PA	0.9075	0.9357
York, PA		
Youngstown-Warren, OH	0.9327	0.9534

TABLE 4A.—WAGE INDEX AND CAPITAL GEOGRAPHIC ADJUSTMENT FACTOR (GAF) FOR URBAN AREAS—Continued

Urban area (constituent counties or county equivalents)	Wage index	GAF
Columbiana, OH		
Mahoning, OH		
Trumbull, OH		
Yuba City, CA	1.0585	1.0397
Sutter, CA		
Yuba, CA		
Yuma, AZ	0.9617	0.9736
Yuma, AZ		

TABLE 4B.—WAGE INDEX AND CAPITAL GEOGRAPHIC ADJUSTMENT FACTOR (GAF) FOR RURAL AREAS

Nonurban area	Wage index	GAF
Alabama	0.6935	0.7783
Alaska	1.2939	1.1930
Arizona	0.8488	0.8938
Arkansas	0.6871	0.7734
California	0.9727	0.9812
Colorado	0.8197	0.8727
Connecticut	1.2545	1.1680
Delaware	0.8359	0.8845
Florida	0.8515	0.8958
Georgia	0.7573	0.8267
Hawaii	1.0841	1.0569
Idaho	0.8471	0.8926
Illinois	0.7316	0.8073
Indiana	0.7693	0.8356
Iowa	0.7327	0.8082
Kansas	0.7069	0.7886
Kentucky	0.7511	0.8220
Louisiana	0.7118	0.7923
Maine	0.8493	0.8942
Maryland	0.8618	0.9032
Massachusetts	1.0741	1.0502
Michigan	0.8616	0.9030
Minnesota	0.8141	0.8686
Mississippi	0.6657	0.7568
Missouri	0.7331	0.8085
Montana	0.8029	0.8604
Nebraska	0.7168	0.7961
Nevada	0.9324	0.9532
New Hampshire	0.9684	0.9783
New Jersey [1]	.....	.....
New Mexico	0.7480	0.8197
New York	0.8560	0.8990
North Carolina	0.7804	0.8438
North Dakota	0.7204	0.7989
Ohio	0.8122	0.8672
Oklahoma	0.6884	0.7744
Oregon	0.9176	0.9428
Pennsylvania	0.8784	0.9150
Puerto Rico	0.5256	0.6437
Rhode Island [1]	.....	.....
South Carolina	0.7691	0.8355
South Dakota	0.6960	0.7802
Tennessee	0.7536	0.8239
Texas	0.7522	0.8228
Utah	0.9025	0.9322
Vermont	0.8765	0.9137
Virginia	0.7656	0.8328
Washington	0.9348	0.9549
West Virginia	0.7969	0.8560
Wisconsin	0.8298	0.8801

TABLE 4B.—WAGE INDEX AND CAPITAL GEOGRAPHIC ADJUSTMENT FACTOR (GAF) FOR RURAL AREAS—Continued

Nonurban area	Wage index	GAF
Wyoming	0.7833	0.8460

[1] All counties within the State are classified urban.

TABLE 4C.—WAGE INDEX AND CAPITAL GEOGRAPHIC ADJUSTMENT FACTOR (GAF) FOR HOSPITALS THAT ARE RECLASSIFIED

Area reclassified to	Wage index	GAF
Albany, GA	0.8493	0.8942
Albany-Schenectady-Troy, NY	0.9033	0.9327
Albuquerque, NM	0.9861	0.9905
Alexandria, LA	0.9130	0.9386
Anchorage, AK	1.2201	1.1459
Anchorage, AK (Rural Alaska Hospitals)	1.2939	1.1930
Atlanta, GA	0.9402	0.9587
Augusta-Aiken, GA-SC	0.8899	0.9232
Baton Rouge, LA	0.8659	0.9061
Benton Harbor, MI	0.7923	0.8526
Benton Harbor, MI (Rural Michigan Hosp.)	0.8616	0.9030
Bergen-Passaic, NJ	1.1331	1.0893
Billings, MT	0.8992	0.9298
Biloxi-Gulfport, MS	0.7807	0.8441
Binghamton, NY	0.8820	0.9176
Birmingham, AL	0.9006	0.9308
Bismarck, ND	0.8475	0.8929
Boston-Brockton-Nashua, MA-NH	1.1503	1.1006
Brazoria, TX	0.8441	0.8904
Bryan-College Station, TX	0.8864	0.9207
Caguas, PR	0.5039	0.6254
Caguas, PR (Rural Puerto Rico Hospitals)	0.5256	0.6437
Charleston-North Charleston, SC	0.8947	0.9266
Charleston, WV	0.8786	0.9152
Charlotte-Gastonia-Rock Hill, NC-SC	0.9648	0.9758
Chattanooga, TN-GA	0.8929	0.9254
Chicago, IL	1.0593	1.0402
Chico-Paradise, CA	1.0071	1.0049
Cincinnati, OH-KY-IN	0.9548	0.9688
Cleveland-Lorain-Elyria, OH	0.9688	0.9785
Columbia, MO	0.8967	0.9281
Columbus, OH	0.9902	0.9933
Dallas, TX	0.9649	0.9758
Davenport-Rock Island-Moline, IA-IL	0.8300	0.8802
Dayton-Springfield, OH	0.9424	0.9602
Denver, CO	1.0821	1.0555
Des Moines, IA	0.8676	0.9073
Detroit, MI	1.0790	1.0534
Dothan, AL	0.7793	0.8430
Dubuque, IA	0.8324	0.8819
Duluth-Superior, MN-WI	0.9166	0.9421
Dutchess County, NY	0.0623	1.0423
Elkhart-Goshen, IN	0.8390	0.8867
Eugene-Springfield, OR	0.9480	0.9641
Fargo-Moorhead, ND-MN	0.9111	0.9382

TABLE 4C.—WAGE INDEX AND CAPITAL GEOGRAPHIC ADJUSTMENT FACTOR (GAF) FOR HOSPITALS THAT ARE RECLASSIFIED—Continued

Area reclassified to	Wage index	GAF
Fayetteville, NC	0.8281	0.8788
Flint, MI	1.0689	1.0467
Florence, AL	0.7707	0.8366
Florence, SC	0.8671	0.9070
Fort Lauderdale, FL	1.0573	1.0389
Fort Pierce-Port St. Lucie, FL	0.9676	0.9915
Fort Smith, AR	0.7611	0.8295
Fort Walton Beach, FL	0.8691	0.9084
Fort Wayne, IN	0.8893	0.9228
Fort Worth-Arlington, TX	0.9550	0.9690
Fresno, CA	1.0244	1.0166
Gadsden, AL	0.7747	0.8396
Glens Falls, NY	0.9393	0.9580
Great Falls, MT	0.8906	0.9237
Green Bay, WI	0.8852	0.9199
Greenville-Spartanburg-Anderson, SC	0.8715	0.9101
Harrisburg-Lebanon-Carlisle, PA	0.9995	0.9997
Hartford, CT	1.1968	1.1309
Honolulu, HI	1.0995	1.0671
Houston, TX	0.9908	0.9937
Huntington-Ashland, WV-KY-OH	0.8817	0.9174
Huntsville, AL	0.7954	0.8549
Indianapolis, IN	0.9871	0.9911
Jackson, MS	0.7519	0.8226
Jackson, TN	0.8007	0.8588
Johnson City-Kingsport-Bristol, TN-VA	0.8472	0.8927
Joplin, MO	0.7697	0.8359
Kalamazoo-Battlecreek, MI	1.0749	1.0507
Kansas City, KS-MO	0.9538	0.9681
Kokomo, IN	0.8440	0.8903
Lafayette, LA	0.8144	0.8688
Lafayette, IN	0.8415	0.8885
Lansing-East Lansing, MI	0.9633	0.9747
Lexington, KY	0.8291	0.8796
Lima, OH	0.8441	0.8904
Lincoln, NE	0.8469	0.8924
Little Rock-North Little Rock, AR	0.8306	0.8806
Los Angeles-Long Beach, CA	1.2719	1.1790
Macon, GA	0.9254	0.9483
Mansfield, OH	0.8158	0.8699
Medford-Ashland, OR	0.9768	0.9841
Memphis, TN-AR-MS	0.8341	0.8832
Miami, FL	0.7704	0.8364
Miami, FL (Rural Florida Only)	0.8515	0.8958
Middlesex-Somerset-Hunterdon, NJ	1.0651	1.0441
Milwaukee, WI	0.9240	0.9473
Minneapolis-St. Paul, MN-WI	1.0855	1.0578
Modesto, CA	1.1471	1.0985
Monroe, LA	0.7663	0.8334
Montgomery, AL	0.7564	0.8260
Myrtle Beach, SC	0.7906	0.8514
Nashville, TN	0.9105	0.9378
New Haven-Bridgeport-Stamford-Danbury-Waterbury, CT	1.2289	1.1516
New London-Norwich, CT	1.1589	1.1063

TABLE 4C.—WAGE INDEX AND CAPITAL GEOGRAPHIC ADJUSTMENT FACTOR (GAF) FOR HOSPITALS THAT ARE RECLASSIFIED—Continued

Area reclassified to	Wage index	GAF
New Orleans, LA	0.9443	0.9615
New York, NY	1.4020	1.2604
Newark, NJ	1.1145	1.0771
Newburgh, NY-PA	0.9908	0.9937
Oakland, CA	1.4369	1.2818
Odessa-Midland, TX	0.8735	0.9115
Oklahoma City, OK	0.8455	0.8914
Olympia, WA	1.0326	1.0222
Omaha, NE-IA	0.9900	0.9931
Orange County, CA	1.3409	1.2225
Owensboro, KY	0.7654	0.8327
Peoria-Pekin, IL	0.8249	0.8765
Philadelphia, PA-NJ	1.1160	1.0781
Pittsburgh, PA	0.9786	0.9853
Portland-Vancouver, OR-WA	1.1051	1.0708
Provo-Orem, UT	0.9609	0.9731
Pueblo, CO	0.8260	0.8773
Raleigh-Durham-Chapel Hill, NC	0.9521	0.9669
Reno, NV	1.2009	1.1336
Roanoke, VA	0.8358	0.8844
Saginaw-Bay City-Midland, MI	0.9549	0.9689
St. Cloud, MN	0.9711	0.9801
St. Louis, MO-IL	0.9192	0.9439
Salinas, CA	1.3087	1.2023
Salt Lake City-Ogden, UT	0.9669	0.9772
San Francisco, CA	1.4086	1.2644
San Juan, PR	0.4969	0.6194
Santa Fe, NM	0.9503	0.9657
Santa Rosa, CA	1.2827	1.1859
Seattle-Bellevue-Everett, WA	1.0985	1.0664
Sherman-Denison, TX	0.8912	0.9242
South Bend, IN	0.9305	0.9519
Springfield, IL	0.8727	0.9110
Syracuse, NY	0.9749	0.9827
Tampa-St. Petersburg-Clearwater, FL	0.9351	0.9551
Texarkana, TX-Texarkana, AR	0.8085	0.8645
Topeka, KS	0.9221	0.9460
Tucson, AZ	0.9843	0.9892
Tulsa, OK	0.8311	0.8810
Tyler, TX	0.9012	0.9312
Victoria, TX	0.8659	0.9061
Waterloo-Cedar Falls, IA	0.8726	0.9109
Wausau, WI	0.9225	0.9463
Wichita, KS	0.9356	0.9554
Rural Alabama	0.6935	0.7783
Rural Georgia	0.7573	0.8267
Rural Kentucky	0.7511	0.8220
Rural Kentucky (Rural TN Hospitals)	0.7536	0.8239
Rural Louisiana	0.7118	0.7923
Rural Michigan	0.8616	0.9030
Rural Minnesota	0.8141	0.8686
Rural North Carolina	0.7804	0.8438
Rural South Dakota	0.6960	0.7802
Rural South Dakota (Rural ND Hospitals)	0.7168	0.7961
Rural Utah	0.9025	0.9322
Rural Virginia	0.7656	0.8328
Rural West Virginia	0.7969	0.8560

TABLE 4D.—AVERAGE HOURLY WAGE FOR URBAN AREAS

Urban area	Average hourly wage
Abilene, TX	15.2428
Aguadilla, PR	9.5376
Akron, OH	15.9696
Albany, GA	14.6612
Albany-Schenectady-Troy, NY	15.5936
Albuquerque, NM	16.9473
Alexandria, LA	15.7609
Allentown-Bethlehem-Easton, PA-NJ	17.3217
Altoona, PA	16.1256
Amarillo, TX	14.9613
Anchorage, AK	21.0609
Ann Arbor, MI	21.6446
Anniston, AL	13.8059
Appleton-Oshkosh-Neenah, WI	15.0928
Arecibo, PR	6.3951
Asheville, NC	15.8386
Athens, GA	14.3693
Atlanta, GA	16.2225
Atlantic City-Cape May, NJ	18.2697
Augusta-Aiken, GA-SC	15.3613
Austin-San Marcos, TX	15.8961
Bakersfield, CA	18.7418
Baltimore, MD	17.3241
Bangor, ME	15.8649
Barnstable-Yarmouth, MA	23.0459
Baton Rouge, LA	14.9472
Beaumont-Port Arthur, TX	15.4227
Bellingham, WA	19.2426
Benton Harbor, MI	13.6759
Bergen-Passaic, NJ	19.5203
Billings, MT	15.5216
Biloxi-Gulfport-Pascagoula, MS	13.9062
Binghamton, NY	15.7043
Birmingham, AL	15.5459
Bismarck, ND	15.1194
Bloomington, IN	14.7166
Bloomington-Normal, IL	14.7875
Boise City, ID	15.3344
Boston-Boston-Nashua, MA-NH	19.8567
Boulder-Longmont, CO	16.9518
Brazoria, TX	15.8292
Bremerton, WA	16.4485
Brownsville-Harlingen-San Benito, TX	14.6360
Bryan-College Station, TX	15.6292
Buffalo-Niagara Falls, NY	15.7378
Burlington, VT	16.3272
Caguas, PR	8.1607
Canton-Massillon, OH	15.0487
Casper, WY	14.5147
Cedar Rapids, IA	14.6304
Champaign-Urbana, IL	15.0530
Charleston-North Charleston, SC	15.4444
Charleston, WV	15.1664
Charlotte-Gastonia-Rock Hill, NC-SC	16.6550
Charlottesville, VA	16.3597
Chattanooga, TN-GA	15.6884
Cheyenne, WY	13.0128
Chicago, IL	18.2865
Chico-Paradise, CA	17.3847
Cincinnati, OH-KY-IN	16.4814
Clarksville-Hopkinsville, TN-KY	11.7823
Cleveland-Lorain-Elyria, OH	16.9469
Colorado Springs, CO	16.3362
Columbia, MO	16.0745
Columbia, SC	15.2795
Columbus, GA-AL	13.0533

TABLE 4D.—AVERAGE HOURLY WAGE FOR URBAN AREAS—Continued

Urban area	Average hourly wage
Columbus, OH	17.0935
Corpus Christi, TX	14.3870
Cumberland, MD-WV	13.9876
Dallas, TX	16.6570
Danville, VA	13.6045
Davenport-Moline-Rock Island, IA-IL	14.3268
Dayton-Springfield, OH	16.2585
Daytona Beach, FL	15.2349
Decatur, AL	13.8006
Decatur, IL	13.8290
Denver, CO	18.8756
Des Moines, IA	14.9768
Detroit, MI	18.6254
Dothan, AL	13.4521
Dover, DE	15.0658
Dubuque, IA	14.3690
Duluth-Superior, MN-WI	15.8224
Dutchess County, NY	18.3373
Eau Claire, WI	14.6399
El Paso, TX	16.4626
Elkhart-Goshen, IN	14.7770
Elmira, NY	14.7734
Enid, OK	13.7836
Erie, PA	15.8276
Eugene-Springfield, OR	16.3648
Evansville, Henderson, IN-KY	15.3706
Fargo-Moorhead, ND-MN	16.4981
Fayetteville, NC	14.7062
Fayetteville-Springdale-Rogers, AR	12.5094
Flint, MI	18.4508
Florence, AL	12.7308
Florence, SC	14.9671
Fort Collins-Loveland, CO	17.0633
Fort Lauderdale, FL	18.1586
Fort Myers-Cape Coral, FL	16.0177
Fort Pierce-Port St. Lucie, FL	18.0857
Fort Smith, AR-OK	13.1172
Fort Walton Beach, FL	15.2332
Fort Wayne, IN	15.2786
Fort Worth-Arlington, TX	16.4673
Fresno, CA	17.6839
Gadsden, AL	13.3587
Gainesville, FL	15.3822
Galveston-Texas City, TX	17.0298
Gary, IN	16.5894
Glens Falls, NY	16.0572
Goldsboro, NC	14.4976
Grand Forks, ND-MN	15.1824
Grand Rapids-Muskegon-Holland, MI	16.8377
Great Falls, MT	15.2809
Greeley, CO	15.0424
Green Bay, WI	15.2804
Greensboro-Winston-Salem-High Point, NC	16.0242
Greenville, NC	16.1067
Greenville-Spartanburg-Anderson, SC	15.0442
Hagerstown, MD	15.2431
Hamilton-Middletown, OH	15.8440
Harrisburg-Lebanon-Carlisle, PA	17.2197
Hartford, CT	20.8621
Hickory-Morganton, NC	15.1912
Honolulu, HI	18.9797
Houma, LA	13.4037
Houston, TX	17.1024
Huntington-Ashland, WV-KY-OH	15.4852
Huntsville, AL	14.0820

TABLE 4D.—AVERAGE HOURLY WAGE FOR URBAN AREAS—Continued

Urban area	Average hourly wage
Indianapolis, IN	17.0389
Iowa City, IA	16.7544
Jackson, MI	16.0144
Jackson, MS	12.8639
Jackson, TN	13.8213
Jacksonville, FL	15.4805
Jacksonville, NC	12.4243
Jamestown, NY	13.2714
Janesville-Beloit, WI	14.5269
Jersey City, NJ	18.8943
Johnson City-Kingsport-Bristol, TN-VA	14.6243
Johnstown, PA	15.1922
Joplin, MO	13.2863
Kalamazoo-Battle Creek, MI	18.8930
Kankakee, IL	14.5998
Kansas City, KS-MO	16.4648
Kenosha, WI	15.2700
Killeen-Temple, TX	17.5544
Knoxville, TN	15.9627
Kokomo, IN	14.8730
LaCrosse, WI	14.5157
Lafayette, LA	13.9831
Lafayette, IN	14.5264
Lake Charles, LA	14.0403
Lakeland-Winter Haven, FL	14.3878
Lancaster, PA	16.4341
Lansing-East Lansing, MI	16.6290
Laredo, TX	12.0031
Las Cruces, NM	15.3965
Las Vegas, NV-AZ	18.4945
Lawrence, KS	15.1783
Lawton, OK	14.5916
Lewiston-Auburn, ME	16.6482
Lexington, KY	14.2745
Lima, OH	14.5715
Lincoln, NE	15.3702
Little Rock-North Little Rock, AR	14.3384
Longview-Marshall, TX	15.0533
Los Angeles-Long Beach, CA	21.9551
Louisville, KY-IN	16.2382
Lubbock, TX	14.9804
Lynchburg, VA	14.1996
Macon, GA	16.7503
Madison, WI	17.2224
Mansfield, OH	14.0825
Mayaguez, PR	9.3158
McAllen-Edinburg-Mission, TX	14.6669
Medford-Ashland, OR	16.0752
Melbourne-Titusville-Palm Bay, FL	16.1502
Memphis, TN-AR-MS	14.7522
Merced, CA	17.2976
Miami, FL	18.2567
Middlesex-Somerset-Hunterdon, NJ	18.8082
Milwaukee-Waukesha, WI	15.9496
Minneapolis-St Paul, MN-WI	18.7387
Mobile, AL	13.4667
Modesto, CA	19.8014
Monmouth-Ocean, NJ	17.7266
Monroe, LA	13.2274
Montgomery, AL	12.9554
Muncie, IN	14.7522
Myrtle Beach, SC	14.1760
Naples, FL	16.6512
Nashville, TN	15.7168
Nassau-Suffolk, NY	23.2995
New Haven-Bridgeport-Stamford-Danbury-Waterbury, CT	21.2015

TABLE 4D.—AVERAGE HOURLY WAGE FOR URBAN AREAS—Continued

Urban area	Average hourly wage
New London-Norwich, CT	19.8762
New Orleans, LA	16.2855
New York, NY	24.2016
Newark, NJ	20.4375
Newburgh, NY-PA	17.6526
Norfolk-Virginia Beach-Newport News, VA	14.7428
Oakland, CA	24.5895
Ocala, FL	14.6554
Odessa-Midland, TX	15.0776
Oklahoma City, OK	14.5953
Olympia, WA	17.8255
Omaha, NE-IA	17.0887
Orange County, CA	21.5261
Orlando, FL	16.8863
Owensboro, KY	13.2122
Panama City, FL	14.4288
Parkersburg-Marietta, WV-OH	13.3748
Pensacola, FL	14.5499
Peoria-Pekin, IL	14.4402
Philadelphia, PA-NJ	19.4459
Phoenix-Mesa, AZ	17.6465
Pine Bluff, AR	15.0421
Pittsburgh, PA	17.1758
Pittsfield, MA	18.9899
Ponce, PR	8.9188
Portland, ME	16.2826
Portland-Vancouver, OR-WA	19.0763
Providence-Warwick, RI	18.5006
Provo-Orem, UT	17.1937
Pueblo, CO	14.2589
Punta Gorda, FL	15.7648
Racine, WI	15.2123
Raleigh-Durham-Chapel Hill, NC	16.4360
Rapid City, SD	14.1890
Reading, PA	15.6775
Redding, CA	20.0625
Reno, NV	20.7293
Richland-Kennewick-Pasco, WA	15.9052
Richmond-Petersburg, VA	15.1929
Riverside-San Bernardino, CA	20.9353
Roanoke, VA	14.3877
Rochester, MN	17.3966
Rochester, NY	16.8499
Rockford, IL	15.0320
Rocky Mount, NC	14.8904
Sacramento, CA	20.9985
Saginaw-Bay City-Midland, MI	16.4403
St Cloud, MN	16.9596
St Joseph, MO	15.2095
St Louis, MO-IL	15.8494
Salem, OR	16.2476
Salinas, CA	22.7627
Salt Lake City-Ogden, UT	16.4651
San Angelo, TX	13.6142
San Antonio, TX	14.1713
San Diego, CA	20.5556
San Francisco, CA	24.5559
San Jose, CA	24.6056
San Juan-Bayamon, PR	8.5769
San Luis Obispo-Atascadero-Paso Robles, CA	21.4715
Santa Barbara-Santa Maria-Lompoc, CA	20.0870
Santa Cruz-Watsonville, CA	21.9981
Santa Fe, NM	17.2367
Santa Rosa, CA	22.5856
Sarasota-Bradenton, FL	16.7642
Savannah, GA	14.9751

TABLE 4D.—AVERAGE HOURLY WAGE FOR URBAN AREAS—Continued

Urban area	Average hourly wage
Scranton-Wilkes Barre-Hazleton, PA	14.8535
Seattle-Bellevue-Everett, WA	18.9627
Sharon, PA	15.3367
Sheboygan, WI	14.2050
Sherman-Denison, TX	15.3671
Shreveport-Bossier City, LA	15.4784
Sioux City, IA-NE	14.7364
Sioux Falls, SD	15.0515
South Bend, IN	16.3751
Spokane, WA	17.5559
Springfield, IL	15.0651
Springfield, MO	13.5780
Springfield, MA	17.8144
State College, PA	16.3064
Steubenville-Weirton, OH-WV	13.8318
Stockton-Lodi, CA	19.2415
Sumter, SC	13.4801
Syracuse, NY	17.0361
Tacoma, WA	17.5469
Tallahassee, FL	14.3948
Tampa-St. Petersburg-Clearwater, FL	16.1114
Terre Haute, IN	14.8434
Texarkana, TX-Texarkana, AR	13.7395
Toledo, OH	17.2103
Topeka, KS	15.9172
Trenton, NJ	17.4405
Tucson, AZ	16.9839
Tulsa, OK	14.3472
Tuscaloosa, AL	14.6920
Tyler, TX	15.7416
Utica-Rome, NY	14.9019
Vallejo-Fairfield-Napa, CA	21.6135
Ventura, CA	21.5700
Victoria, TX	15.4109
Vineland-Millville-Bridgeton, NJ	17.3413
Visalia-Tulare-Porterville, CA	18.4141
Waco, TX	13.3752
Washington, DC-MD-VA-WV	18.6909
Waterloo-Cedar Falls, IA	14.8989
Wausau, WI	16.8715
West Palm Beach-Boca Raton, FL	17.7005
Wheeling, WV-OH	13.2821
Wichita, KS	16.8772
Wichita Falls, TX	13.7258
Williamsport, PA	14.6785
Wilmington-Newark, DE-MD	18.4130
Wilmington, NC	15.5999
Yakima, WA	16.2629
Yolo, CA	19.6627
York, PA	15.6647
Youngstown-Warren, OH	16.1008
Yuba City, CA	18.2712
Yuma, AZ	16.6005

TABLE 4E.—AVERAGE HOURLY WAGE FOR RURAL AREAS

Nonurban area	Average hourly wage
Alabama	11.9571
Alaska	22.3107
Arizona	14.6513
Arkansas	11.8608
California	16.7905

TABLE 4E.—AVERAGE HOURLY WAGE FOR RURAL AREAS—Continued

Nonurban area	Average hourly wage
Colorado	14.1494
Connecticut	21.6549
Delaware	14.4299
Florida	14.6984
Georgia	13.0720
Hawaii	18.4430
Idaho	14.6223
Illinois	12.6290
Indiana	13.2797
Iowa	12.6481
Kansas	12.2027
Kentucky	12.9648
Louisiana	12.2472
Maine	14.6611
Maryland	14.8770
Massachusetts	18.5413

TABLE 4E.—AVERAGE HOURLY WAGE FOR RURAL AREAS—Continued

Nonurban area	Average hourly wage
Michigan	14.8731
Minnesota	14.0532
Mississippi	11.4921
Missouri	12.6551
Montana	13.8599
Nebraska	12.3729
Nevada	16.0944
New Hampshire	16.7167
New Jersey [1]	
New Mexico	12.9116
New York	14.7769
North Carolina	13.4713
North Dakota	12.4349
Ohio	14.0197
Oklahoma	11.8839
Oregon	15.8401

TABLE 4E.—AVERAGE HOURLY WAGE FOR RURAL AREAS—Continued

Nonurban area	Average hourly wage
Pennsylvania	15.0077
Puerto Rico	9.0352
Rhode Island [1]	
South Carolina	13.2754
South Dakota	12.0147
Tennessee	13.0082
Texas	12.9852
Utah	15.5784
Vermont	15.1308
Virginia	13.2159
Washington	16.1360
West Virginia	13.6687
Wisconsin	14.3243
Wyoming	13.5214

[1] All counties within the State are classified urban.

TABLE 5.—LIST OF DIAGNOSIS RELATED GROUPS (DRGS), RELATIVE WEIGHTING FACTORS, GEOMETRIC MEAN LENGTH OF STAY, AND LENGTH OF STAY OUTLIER CUTOFF POINTS USED IN THE PROSPECTIVE PAYMENT SYSTEM

				Relative weights	Geometric mean LOS	Arithmetic mean LOS	Outlier threshold
1	01	SURG	CRANIOTOMY AGE >17 EXCEPT FOR TRAUMA	3.1556	10.5	14.7	34
2	01	SURG	CRANIOTOMY FOR TRAUMA AGE >17	3.1381	10.4	14.6	33
3	01	SURG [1]	CRANIOTOMY AGE 0–17	3.0176	12.7	12.7	36
4	01	SURG	SPINAL PROCEDURES	2.3847	8.1	12.0	31
5	01	SURG	EXTRACRANIAL VASCULAR PROCEDURES	1.5361	4.8	6.1	28
6	01	SURG	CARPAL TUNNEL RELEASE	.6271	2.1	3.4	25
7	01	SURG	PERIPH & CRANIAL NERVE & OTHER NERV SYST PROC WITH CC.	2.5180	10.7	18.8	34
8	01	SURG	PERIPH & CRANIAL NERVE & OTHER NERV SYST PROC W/O CC.	.8576	2.9	4.6	26
9	01	MED	SPINAL DISORDERS & INJURIES	1.3397	6.7	10.5	30
10	01	MED	NERVOUS SYSTEM NEOPLASMS WITH CC	1.2819	7.1	10.5	30
11	01	MED	NERVOUS SYSTEM NEOPLASMS W/O CC	.7691	4.2	5.9	27
12	01	MED	DEGENERATIVE NERVOUS SYSTEM DISORDERS	.9449	6.6	9.4	30
13	01	MED	MULTIPLE SCLEROSIS & CEREBELLAR ATAXIA	.8108	6.2	7.8	29
14	01	MED	SPECIFIC CEREBROVASCULAR DISORDERS EXCEPT TIA	1.2056	6.7	9.3	30
15	01	MED	TRANSIENT ISCHEMIC ATTACK & PRECEREBRAL OCCLUSIONS.	.6766	4.0	5.1	27
16	01	MED	NONSPECIFIC CEREBROVASCULAR DISORDERS W CC	1.1141	6.5	8.8	29
17	01	MED	NONSPECIFIC CEREBROVASCULAR DISORDERS W/O CC	.6648	4.3	5.6	27
18	01	MED	CRANIAL & PERIPHERAL NERVE DISORDERS WITH CC	.9202	5.6	7.4	29
19	01	MED	CRANIAL & PERIPHERAL NERVE DISORDERS W/O CC	.5927	3.8	5.1	27
20	01	MED	NERVOUS SYSTEM INFECTION EXCEPT VIRAL MENINGITIS.	2.0613	8.4	12.1	31
21	01	MED	VIRAL MENINGITIS	1.4304	6.8	9.1	30
22	01	MED	HYPERTENSIVE ENCEPHALOPATHY	.7286	4.1	5.1	27
23	01	MED	NONTRAUMATIC STUPOR & COMA	.8407	4.1	6.0	27
24	01	MED	SEIZURE & HEADACHE AGE >17 WITH CC	.9759	5.1	7.0	28
25	01	MED	SEIZURE & HEADACHE AGE >17 W/O CC	.5426	3.3	4.3	26
26	01	MED	SEIZURE & HEADACHE AGE 0–17	.9878	3.6	5.9	27
27	01	MED	TRAUMATIC STUPOR & COMA, COMA >1 HR	1.3311	4.0	7.5	27
28	01	MED	TRAUMATIC STUPOR & COMA, COMA <1 HR AGE >17 WITH CC.	1.2078	5.8	8.9	29
29	01	MED	TRAUMATIC STUPOR & COMA, COMA <1 HR AGE >17 W/O CC.	.5941	3.3	4.8	26
30	01	MED [1]	TRAUMATIC STUPOR & COMA, COMA <1 HR AGE 0–17	.3660	2.0	2.0	17
31	01	MED	CONCUSSION AGE >17 WITH CC	.7335	4.2	6.0	27
32	01	MED	CONCUSSION AGE >17 W/O CC	.4494	2.5	3.4	22
33	01	MED [1]	CONCUSSION AGE 0–17	.2540	1.6	1.6	9
34	01	MED	OTHER DISORDERS OF NERVOUS SYSTEM WITH CC	1.1103	5.6	7.9	29
35	01	MED	OTHER DISORDERS OF NERVOUS SYSTEM W/O CC	.5656	3.6	4.9	27

TABLE 5.—LIST OF DIAGNOSIS RELATED GROUPS (DRGS), RELATIVE WEIGHTING FACTORS, GEOMETRIC MEAN LENGTH OF STAY, AND LENGTH OF STAY OUTLIER CUTOFF POINTS USED IN THE PROSPECTIVE PAYMENT SYSTEM—Continued

				Relative weights	Geometric mean LOS	Arithmetic mean LOS	Outlier threshold
36	02	SURG	RETINAL PROCEDURES	.6087	1.7	2.1	9
37	02	SURG	ORBITAL PROCEDURES	.7843	2.6	3.9	26
38	02	SURG	PRIMARY IRIS PROCEDURES	.3716	2.1	2.6	15
39	02	SURG	LENS PROCEDURES WITH OR WITHOUT VITRECTOMY	.4723	1.5	1.9	8
40	02	SURG	EXTRAOCULAR PROCEDURES EXCEPT ORBIT AGE >17	.5586	2.1	3.2	25
41	02	SURG [1]	EXTRAOCULAR PROCEDURES EXCEPT ORBIT AGE 0–17	.3782	1.6	1.6	7
42	02	SURG	INTRAOCULAR PROCEDURES EXCEPT RETINA, IRIS & LENS.	.5777	1.8	2.4	13
43	02	MED	HYPHEMA	.3814	3.4	4.3	24
44	02	MED	ACUTE MAJOR EYE INFECTIONS	.5949	5.2	6.3	28
45	02	MED	NEUROLOGICAL EYE DISORDERS	.6047	3.4	4.3	26
46	02	MED	OTHER DISORDERS OF THE EYE AGE >17 W CC	.7288	4.3	6.1	27
47	02	MED	OTHER DISORDERS OF THE EYE AGE >17 W/O CC	.4047	2.8	3.8	26
48	02	MED [1]	OTHER DISORDERS OF THE EYE AGE 0–17	.4155	2.9	2.9	26
49	03	SURG	MAJOR HEAD & NECK PROCEDURES	1.7937	5.3	7.6	28
50	03	SURG	SIALOADENECTOMY	.6732	2.0	2.4	12
51	03	SURG	SALIVARY GLAND PROCEDURES EXCEPT SIALOADENECTOMY.	.6515	2.0	2.8	18
52	03	SURG	CLEFT LIP & PALATE REPAIR	.7697	2.2	3.0	19
53	03	SURG	SINUS & MASTOID PROCEDURES AGE >17	.7645	2.0	3.2	25
54	03	SURG [1]	SINUS & MASTOID PROCEDURES AGE 0–17	.7124	3.2	3.2	22
55	03	SURG	MISCELLANEOUS EAR, NOSE, MOUTH & THROAT PROCEDURES.	.5761	1.7	2.6	17
56	03	SURG	RHINOPLASTY	.6412	1.9	2.8	19
57	03	SURG	T&A PROC, EXCEPT TONSILLECTOMY &/OR ADENOIDECTOMY ONLY, AGE >17.	.9116	3.3	5.2	26
58	03	SURG [1]	T&A PROC, EXCEPT TONSILLECTOMY &/OR ADENOIDECTOMY ONLY, AGE 0–17.	.3203	1.5	1.5	4
59	03	SURG	TONSILLECTOMY &/OR ADENOIDECTOMY ONLY, AGE >17.	.4158	1.6	1.9	9
60	03	SURG [1]	TONSILLECTOMY &/OR ADENOIDECTOMY ONLY, AGE 0–17.	.2704	1.5	1.5	4
61	03	SURG	MYRINGOTOMY W TUBE INSERTION AGE >17	1.0307	2.8	5.3	26
62	03	SURG [1]	MYRINGOTOMY W TUBE INSERTION AGE 0–17	.3194	1.3	1.3	5
63	03	SURG	OTHER EAR, NOSE, MOUTH & THROAT O.R. PROCEDURES.	1.0520	3.6	5.4	27
64	03	MED	EAR, NOSE, MOUTH & THROAT MALIGNANCY	1.1571	5.3	8.9	28
65	03	MED	DYSEQUILIBRIUM	.4952	3.1	3.9	23
66	03	MED	EPISTAXIS	.4909	3.2	4.1	25
67	03	MED	EPIGLOTTITIS	.8481	3.9	4.8	27
68	03	MED	OTITIS MEDIA & URI AGE >17 WITH CC	.7158	4.7	5.7	28
69	03	MED	OTITIS MEDIA & URI AGE >17 W/O CC	.5126	3.6	4.4	23
70	03	MED	OTITIS MEDIA & URI AGE 0–17	.3978	2.5	3.4	25
71	03	MED	LARYNGOTRACHEITIS	.6838	3.8	4.7	27
72	03	MED	NASAL TRAUMA & DEFORMITY	.6079	3.4	4.9	26
73	03	MED	OTHER EAR, NOSE, MOUTH & THROAT DIAGNOSES AGE >17.	.7591	4.2	5.7	27
74	03	MED [1]	OTHER EAR, NOSE, MOUTH & THROAT DIAGNOSES AGE 0–17.	.3545	2.1	2.1	20
75	04	SURG	MAJOR CHEST PROCEDURES	3.0397	10.6	13.0	34
76	04	SURG	OTHER RESP SYSTEM O.R. PROCEDURES W CC	2.4770	10.4	14.4	33
77	04	SURG	OTHER RESP SYSTEM O.R. PROCEDURES W/O CC	1.0443	4.1	6.4	27
78	04	MED	PULMONARY EMBOLISM	1.4292	8.2	9.7	31
79	04	MED	RESPIRATORY INFECTIONS & INFLAMMATIONS AGE >17 WITH CC.	1.7332	8.7	11.3	32
80	04	MED	RESPIRATORY INFECTIONS & INFLAMMATIONS AGE >17 W/O CC.	.9278	6.1	7.5	29
81	04	MED [1]	RESPIRATORY INFECTIONS & INFLAMMATIONS AGE 0–17	1.1408	6.1	6.1	29
82	04	MED	RESPIRATORY NEOPLASMS	1.3105	6.6	9.3	30
83	04	MED	MAJOR CHEST TRAUMA WITH CC	.9403	5.7	7.5	29
84	04	MED	MAJOR CHEST TRAUMA W/O CC	.4986	3.3	4.3	26
85	04	MED	PLEURAL EFFUSION WITH CC	1.1891	6.6	8.7	30
86	04	MED	PLEURAL EFFUSION W/O CC	.6691	3.9	5.1	27
87	04	MED	PULMONARY EDEMA & RESPIRATORY FAILURE	1.3495	5.6	7.8	29
88	04	MED	CHRONIC OBSTRUCTIVE PULMONARY DISEASE	1.0067	5.8	7.1	29
89	04	MED	SIMPLE PNEUMONIA & PLEURISY AGE >17 WITH CC	1.1447	6.8	8.4	30
90	04	MED	SIMPLE PNEUMONIA & PLEURISY AGE >17 W/O CC	.6990	5.1	5.9	27

TABLE 5.—LIST OF DIAGNOSIS RELATED GROUPS (DRGS), RELATIVE WEIGHTING FACTORS, GEOMETRIC MEAN LENGTH OF STAY, AND LENGTH OF STAY OUTLIER CUTOFF POINTS USED IN THE PROSPECTIVE PAYMENT SYSTEM—Continued

				Relative weights	Geometric mean LOS	Arithmetic mean LOS	Outlier threshold
91	04	MED	SIMPLE PNEUMONIA & PLEURISY AGE 0–17	.7767	3.8	5.2	27
92	04	MED	INTERSTITIAL LUNG DISEASE WITH CC	1.2039	6.6	8.4	30
93	04	MED	INTERSTITIAL LUNG DISEASE W/O CC	.7550	4.6	5.9	28
94	04	MED	PNEUMOTHORAX WITH CC	1.2433	6.7	8.8	30
95	04	MED	PNEUMOTHORAX W/O CC	.6067	4.1	5.1	27
96	04	MED	BRONCHITIS & ASTHMA AGE >17 WITH CC	.8776	5.5	6.6	29
97	04	MED	BRONCHITIS & ASTHMA AGE >17 W/O CC	.6067	4.2	4.9	24
98	04	MED	BRONCHITIS & ASTHMA AGE 0–17	.6840	3.5	4.7	27
99	04	MED	RESPIRATORY SIGNS & SYMPTOMS WITH CC	.7149	3.4	4.5	26
100	04	MED	RESPIRATORY SIGNS & SYMPTOMS W/O CC	.5004	2.4	2.9	16
101	04	MED	OTHER RESPIRATORY SYSTEM DIAGNOSES WITH CC	.9035	4.8	6.5	28
102	04	MED	OTHER RESPIRATORY SYSTEM DIAGNOSES W/O CC	.5282	3.1	4.0	26
103	05	SURG	HEART TRANSPLANT	14.0215	25.9	36.6	49
104	05	SURG	CARDIAC VALVE PROCEDURES W CARDIAC CATH	7.6559	16.5	19.4	40
105	05	SURG	CARDIAC VALVE PROCEDURES W/O CARDIAC CATH	5.7990	11.6	13.7	35
106	05	SURG	CORONARY BYPASS W CARDIAC CATH	5.6791	12.9	14.5	36
107	05	SURG	CORONARY BYPASS W/O CARDIAC CATH	4.2005	9.8	10.9	33
108	05	SURG	OTHER CARDIOTHORACIC PROCEDURES	5.8690	11.8	15.1	35
109			NO LONGER VALID	.0000	.0	.0	0
110	05	SURG	MAJOR CARDIOVASCULAR PROCEDURES WITH CC	4.0494	9.5	12.7	33
111	05	SURG	MAJOR CARDIOVASCULAR PROCEDURES W/O CC	2.3214	6.9	8.0	30
112	05	SURG	PERCUTANEOUS CARDIOVASCULAR PROCEDURES	1.9736	4.2	5.7	27
113	05	SURG	AMPUTATION FOR CIRC SYSTEM DISORDERS EXCEPT UPPER LIMB & TOE.	2.7931	13.5	18.3	36
114	05	SURG	UPPER LIMB & TOE AMPUTATION FOR CIRC SYSTEM DISORDERS.	1.5631	8.3	11.6	31
115	05	SURG	PERM CARDIAC PACEMAKER IMPLANT W AMI, HEART FAILURE OR SHOCK.	3.5886	10.9	13.3	34
116	05	SURG	OTH PERM CARDIAC PACEMAKER IMPLANT OR AICD LEAD OR GEN PROC.	2.4248	5.0	6.8	28
117	05	SURG	CARDIAC PACEMAKER REVISION EXCEPT DEVICE REPLACEMENT.	1.1328	3.3	4.8	26
118	05	SURG	CARDIAC PACEMAKER DEVICE REPLACEMENT	1.5419	2.4	3.7	25
119	05	SURG	VEIN LIGATION & STRIPPING	.9834	3.5	6.0	26
120	05	SURG	OTHER CIRCULATORY SYSTEM O.R. PROCEDURES	1.9626	6.6	11.4	30
121	05	MED	CIRCULATORY DISORDERS W AMI & C.V. COMP DISCH ALIVE.	1.6017	7.4	9.1	30
122	05	MED	CIRCULATORY DISORDERS W AMI W/O C.V. COMP DISCH ALIVE.	1.1325	5.2	6.4	28
123	05	MED	CIRCULATORY DISORDERS W AMI, EXPIRED	1.4116	2.9	5.2	26
124	05	MED	CIRCULATORY DISORDERS EXCEPT AMI, W CARD CATH & COMPLEX DIAG.	1.2307	4.2	5.6	27
125	05	MED	CIRCULATORY DISORDERS EXCEPT AMI, W CARD CATH W/O COMPLEX DIAG.	.7960	2.3	3.1	23
126	05	MED	ACUTE & SUBACUTE ENDOCARDITIS	2.7299	14.6	19.4	38
127	05	MED	HEART FAILURE & SHOCK	1.0234	5.7	7.4	29
128	05	MED	DEEP VEIN THROMBOPHLEBITIS	.7825	7.0	8.0	30
129	05	MED	CARDIAC ARREST, UNEXPLAINED	1.1959	2.2	4.1	25
130	05	MED	PERIPHERAL VASCULAR DISORDERS WITH CC	.9042	6.0	7.7	29
131	05	MED	PERIPHERAL VASCULAR DISORDERS W/O CC	.5831	4.6	5.8	28
132	05	MED	ATHEROSCLEROSIS WITH CC	.7594	3.8	5.2	27
133	05	MED	ATHEROSCLEROSIS W/O CC	.5257	2.8	3.6	22
134	05	MED	HYPERTENSION	.5614	3.6	4.6	27
135	05	MED	CARDIAC CONGENITAL & VALVULAR DISORDERS AGE > 17 WITH CC.	.8609	4.5	6.2	28
136	05	MED	CARDIAC CONGENITAL & VALVULAR DISORDERS AGE > 17 W/O CC.	.5489	3.0	3.9	24
137	05	MED[1]	CARDIAC CONGENITAL & VALVULAR DISORDERS AGE 0–17.	.6530	3.3	3.3	26
138	05	MED	CARDIAC ARRHYTHMIA & CONDUCTION DISORDERS WITH CC.	.8038	4.2	5.5	27
139	05	MED	CARDIAC ARRHYTHMIA & CONDUCTION DISORDERS W/O CC.	.4946	2.8	3.5	20
140	05	MED	ANGINA PECTORIS	.6241	3.4	4.2	24
141	05	MED	SYNCOPE & COLLAPSE WITH CC	.7053	4.1	5.3	27
142	05	MED	SYNCOPE & COLLAPSE W/O CC	.5150	3.0	3.8	21
143	05	MED	CHEST PAIN	.5189	2.6	3.2	17

TABLE 5.—LIST OF DIAGNOSIS RELATED GROUPS (DRGS), RELATIVE WEIGHTING FACTORS, GEOMETRIC MEAN LENGTH OF STAY, AND LENGTH OF STAY OUTLIER CUTOFF POINTS USED IN THE PROSPECTIVE PAYMENT SYSTEM—Continued

				Relative weights	Geometric mean LOS	Arithmetic mean LOS	Outlier threshold
144	05	MED	OTHER CIRCULATORY SYSTEM DIAGNOSES W CC	1.0659	4.7	6.7	28
145	05	MED	OTHER CIRCULATORY SYSTEM DIAGNOSES W/O CC	.6122	3.0	3.9	26
146	06	SURG	RECTAL RESECTION WITH CC	2.4955	11.3	12.7	34
147	06	SURG	RECTAL RESECTION W/O CC	1.5328	8.0	8.9	30
148	06	SURG	MAJOR SMALL & LARGE BOWEL PROCEDURES WITH CC	3.1719	12.7	15.2	36
149	06	SURG	MAJOR SMALL & LARGE BOWEL PROCEDURES W/O CC	1.5127	8.0	8.7	27
150	06	SURG	PERITONEAL ADHESIOLYSIS WITH CC	2.5505	10.9	13.3	34
151	06	SURG	PERITONEAL ADHESIOLYSIS W/O CC	1.1738	5.7	7.1	29
152	06	SURG	MINOR SMALL & LARGE BOWEL PROCEDURES WITH CC	1.7955	8.6	10.2	32
153	06	SURG	MINOR SMALL & LARGE BOWEL PROCEDURES W/O CC	1.0821	6.3	6.9	25
154	06	SURG	STOMACH, ESOPHAGEAL & DUODENAL PROCEDURES AGE > 17 WITH CC.	4.1338	13.9	17.6	37
155	06	SURG	STOMACH, ESOPHAGEAL & DUODENAL PROCEDURES AGE > 17 W/O CC.	1.3811	6.5	7.9	30
156	06	SURG[1]	STOMACH, ESOPHAGEAL & DUODENAL PROCEDURES AGE 0–17.	.8668	6.0	6.0	29
157	06	SURG	ANAL & STOMAL PROCEDURES WITH CC	1.0048	4.5	6.3	28
158	06	SURG	ANAL & STOMAL PROCEDURES W/O CC	.5100	2.3	2.9	17
159	06	SURG	HERNIA PROCEDURES EXCEPT INGUINAL & FEMORAL AGE >17 WITH CC.	1.0901	4.5	6.0	28
160	06	SURG	HERNIA PROCEDURES EXCEPT INGUINAL & FEMORAL AGE >17 W/O CC.	.6378	2.6	3.3	18
161	06	SURG	INGUINAL & FEMORAL HERNIA PROCEDURES AGE >17 WITH CC.	.8260	3.2	4.6	26
162	06	SURG	INGUINAL & FEMORAL HERNIA PROCEDURES AGE >17 W/O CC.	.4823	1.7	2.2	11
163	06	SURG	HERNIA PROCEDURES AGE 0–17	.6795	3.2	3.9	25
164	06	SURG	APPENDECTOMY W COMPLICATED PRINCIPAL DIAG WITH CC.	2.1679	9.2	10.6	32
165	06	SURG	APPENDECTOMY W COMPLICATED PRINCIPAL DIAG W/O CC.	1.2055	5.9	6.6	24
166	06	SURG	APPENDECTOMY W/O COMPLICATED PRINCIPAL DIAG WITH CC.	1.3413	5.5	6.7	28
167	06	SURG	APPENDECTOMY W/O COMPLICATED PRINCIPAL DIAG W/O CC.	.7801	3.4	3.9	16
168	03	SURG	MOUTH PROCEDURES WITH CC	1.0321	3.5	5.5	27
169	03	SURG	MOUTH PROCEDURES W/O CC	.5824	2.0	2.6	16
170	06	SURG	OTHER DIGESTIVE SYSTEM O.R. PROCEDURES WITH CC	2.7524	10.5	15.3	34
171	06	SURG	OTHER DIGESTIVE SYSTEM O.R. PROCEDURES W/O CC	1.0894	4.6	6.2	28
172	06	MED	DIGESTIVE MALIGNANCY WITH CC	1.3063	6.8	10.1	30
173	06	MED	DIGESTIVE MALIGNANCY W/O CC	.6318	3.4	5.0	26
174	06	MED	G.I. HEMORRHAGE WITH CC	.9657	5.2	6.5	28
175	06	MED	G.I. HEMORRHAGE W/O CC	.5354	3.5	4.1	20
176	06	MED	COMPLICATED PEPTIC ULCER	1.0453	5.6	7.3	29
177	06	MED	UNCOMPLICATED PEPTIC ULCER WITH CC	.7986	4.8	5.9	28
178	06	MED	UNCOMPLICATED PEPTIC ULCER W/O CC	.5804	3.5	4.2	20
179	06	MED	INFLAMMATORY BOWEL DISEASE	1.1072	6.8	8.8	30
180	06	MED	G.I. OBSTRUCTION WITH CC	.9180	5.5	7.1	28
181	06	MED	G.I. OBSTRUCTION W/O CC	.4969	3.6	4.4	24
182	06	MED	ESOPHAGITIS, GASTROENT & MISC DIGEST DISORDERS AGE >17 WITH CC.	.7617	4.6	5.9	28
183	06	MED	ESOPHAGITIS, GASTROENT & MISC DIGEST DISORDERS AGE >17 W/O CC.	.5291	3.2	4.0	23
184	06	MED	ESOPHAGITIS, GASTROENT & MISC DIGEST DISORDERS AGE 0–17.	.4735	2.8	3.8	26
185	03	MED	DENTAL & ORAL DIS EXCEPT EXTRACTIONS & RESTORATIONS, AGE >17.	.8248	4.2	5.8	27
186	03	MED[1]	DENTAL & ORAL DIS EXCEPT EXTRACTIONS & RESTORATIONS, AGE 0–17.	.4251	2.9	2.9	23
187	03	MED	DENTAL EXTRACTIONS & RESTORATIONS	.5852	2.6	3.7	26
188	06	MED	OTHER DIGESTIVE SYSTEM DIAGNOSES AGE >17 WITH CC.	1.0050	5.1	7.1	28
189	06	MED	OTHER DIGESTIVE SYSTEM DIAGNOSES AGE >17 W/O CC.	.4775	2.7	3.7	26
190	06	MED	OTHER DIGESTIVE SYSTEM DIAGNOSES AGE 0–17	.7577	4.2	5.6	27
191	07	SURG	PANCREAS, LIVER & SHUNT PROCEDURES WITH CC	4.3319	14.3	18.8	37
192	07	SURG	PANCREAS, LIVER & SHUNT PROCEDURES W/O CC	1.6460	7.4	9.3	30

TABLE 5.—LIST OF DIAGNOSIS RELATED GROUPS (DRGS), RELATIVE WEIGHTING FACTORS, GEOMETRIC MEAN LENGTH OF STAY, AND LENGTH OF STAY OUTLIER CUTOFF POINTS USED IN THE PROSPECTIVE PAYMENT SYSTEM—Continued

				Relative weights	Geometric mean LOS	Arithmetic mean LOS	Outlier threshold
193	07	SURG	BILIARY TRACT PROC W CC EXCEPT ONLY CHOLECYST W OR W/O C.D.E..	3.0940	13.2	15.7	36
194	07	SURG	BILIARY TRACT PROC W/O CC EXCEPT ONLY CHOLECYST W OR W/O C.D.E.	1.5991	7.7	9.3	31
195	07	SURG	CHOLECYSTECTOMY W C.D.E. WITH CC	2.4066	10.2	11.9	33
196	07	SURG	CHOLECYSTECTOMY W C.D.E. W/O CC	1.5073	6.9	8.1	30
197	07	SURG	CHOLECYSTECTOMY EXCEPT BY LAPAROSCOPE W/O C.D.E. WITH CC.	2.0082	8.2	10.0	31
198	07	SURG	CHOLECYSTECTOMY EXCEPT BY LAPAROSCOPE W/O C.D.E. W/O CC.	1.0432	4.5	5.4	27
199	07	SURG	HEPATOBILIARY DIAGNOSTIC PROCEDURE FOR MALIGNANCY.	2.3557	10.3	13.7	33
200	07	SURG	HEPATOBILIARY DIAGNOSTIC PROCEDURE FOR NONMALIGNANCY.	2.8054	8.7	13.4	32
201	07	SURG	OTHER HEPATOBILIARY OR PANCREAS O.R. PROCEDURES.	3.1526	12.2	17.5	35
202	07	MED	CIRRHOSIS & ALCOHOLIC HEPATITIS	1.3176	6.7	9.2	30
203	07	MED	MALIGNANCY OF HEPATOBILIARY SYSTEM OR PANCREAS.	1.2180	6.5	9.4	30
204	07	MED	DISORDERS OF PANCREAS EXCEPT MALIGNANCY	1.1302	5.9	7.7	29
205	07	MED	DISORDERS OF LIVER EXCEPT MALIG, CIRR, ALC HEPA WITH CC.	1.2470	6.4	9.0	29
206	07	MED	DISORDERS OF LIVER EXCEPT MALIG, CIRR, ALC HEPA W/O CC.	.6181	3.6	5.2	27
207	07	MED	DISORDERS OF THE BILIARY TRACT WITH CC	.9896	5.1	6.7	28
208	07	MED	DISORDERS OF THE BILIARY TRACT W/O CC	.5521	2.9	3.7	24
209	08	SURG	MAJOR JOINT & LIMB REATTACHMENT PROCEDURES—LOWER EXTREMITY.	2.3491	8.6	9.6	31
210	08	SURG	HIP & FEMUR PROCEDURES EXCEPT MAJOR JOINT AGE >17 WITH CC.	1.8702	10.0	11.7	33
211	08	SURG	HIP & FEMUR PROCEDURES EXCEPT MAJOR JOINT AGE >17 W/O CC.	1.3031	7.6	8.6	31
212	08	SURG	HIP & FEMUR PROCEDURES EXCEPT MAJOR JOINT AGE 0–17.	1.4486	4.3	6.0	27
213	08	SURG	AMPUTATION FOR MUSCULOSKELETAL SYSTEM & CONN TISSUE DISORDERS.	1.7485	8.9	12.3	32
214	08	SURG	BACK & NECK PROCEDURES WITH CC	1.8857	7.3	9.1	30
215	08	SURG	BACK & NECK PROCEDURES W/O CC	1.0926	4.4	5.3	26
216	08	SURG	BIOPSIES OF MUSCULOSKELETAL SYSTEM & CONNECTIVE TISSUE.	2.0570	9.6	13.8	33
217	08	SURG	WND DEBRID & SKN GRFT EXCEPT HAND, FOR MUSCSKELET & CONN TISS DIS.	3.0563	13.1	20.4	36
218	08	SURG	LOWER EXTREM & HUMER PROC EXCEPT HIP, FOOT, FEMUR AGE >17 WITH CC.	1.4195	6.3	8.2	29
219	08	SURG	LOWER EXTREM & HUMER PROC EXCEPT HIP, FOOT, FEMUR AGE >17 W/O CC.	.9015	3.9	4.8	25
220	08	SURG[1]	LOWER EXTREM & HUMER PROC EXCEPT HIP, FOOT, FEMUR AGE 0–17.	.9556	5.3	5.3	28
221	08	SURG	KNEE PROCEDURES WITH CC	1.7992	7.1	10.1	30
222	08	SURG	KNEE PROCEDURES W/O CC	.9846	3.6	5.0	27
223	08	SURG	MAJOR SHOULDER/ELBOW PROC, OR OTHER UPPER EXTREMITY PROC W CC.	.8126	2.8	3.5	20
224	08	SURG	SHOULDER, ELBOW OR FOREARM PROC, EXC MAJOR JOINT PROC, W/O CC.	.6698	2.3	2.8	14
225	08	SURG	FOOT PROCEDURES	.8568	3.3	5.1	26
226	08	SURG	SOFT TISSUE PROCEDURES WITH CC	1.3096	5.4	8.0	28
227	08	SURG	SOFT TISSUE PROCEDURES W/O CC	.6866	2.6	3.4	22
228	08	SURG	MAJOR THUMB OR JOINT PROC, OR OTH HAND OR WRIST PROC W CC.	.8225	2.4	3.6	25
229	08	SURG	HAND OR WRIST PROC, EXCEPT MAJOR JOINT PROC, W/O CC.	.5679	1.8	2.4	14
230	08	SURG	LOCAL EXCISION & REMOVAL OF INT FIX DEVICES OF HIP & FEMUR.	.9353	3.8	5.8	27
231	08	SURG	LOCAL EXCISION & REMOVAL OF INT FIX DEVICES EXCEPT HIP & FEMUR.	1.1159	3.7	5.9	27
232	08	SURG	ARTHROSCOPY	1.1082	3.1	5.5	26

TABLE 5.—LIST OF DIAGNOSIS RELATED GROUPS (DRGS), RELATIVE WEIGHTING FACTORS, GEOMETRIC MEAN LENGTH OF STAY, AND LENGTH OF STAY OUTLIER CUTOFF POINTS USED IN THE PROSPECTIVE PAYMENT SYSTEM—Continued

				Relative weights	Geometric mean LOS	Arithmetic mean LOS	Outlier threshold
233	08	SURG	OTHER MUSCULOSKELET SYS & CONN TISS O.R. PROC WITH CC.	1.8454	7.9	11.1	31
234	08	SURG	OTHER MUSCULOSKELET SYS & CONN TISS O.R. PROC W/O CC.	.9321	3.7	5.2	27
235	08	MED	FRACTURES OF FEMUR	.9730	6.4	10.2	29
236	08	MED	FRACTURES OF HIP & PELVIS	.7922	5.9	8.1	29
237	08	MED	SPRAINS, STRAINS, & DISLOCATIONS OF HIP, PELVIS & THIGH.	.5536	4.0	5.3	27
238	08	MED	OSTEOMYELITIS	1.5082	9.7	13.0	33
239	08	MED	PATHOLOGICAL FRACTURES & MUSCULOSKELETAL & CONN TISS MALIGNANCY.	1.0388	7.2	9.5	30
240	08	MED	CONNECTIVE TISSUE DISORDERS WITH CC	1.1488	6.5	8.8	30
241	08	MED	CONNECTIVE TISSUE DISORDERS W/O CC	.5682	4.1	5.3	27
242	08	MED	SEPTIC ARTHRITIS	1.1356	7.5	10.0	30
243	08	MED	MEDICAL BACK PROBLEMS	.7011	5.0	6.6	28
244	08	MED	BONE DISEASES & SPECIFIC ARTHROPATHIES WITH CC	.7437	5.2	7.0	28
245	08	MED	BONE DISEASES & SPECIFIC ARTHROPATHIES W/O CC	.4798	3.6	4.8	27
246	08	MED	NON-SPECIFIC ARTHROPATHIES	.5962	4.2	5.4	27
247	08	MED	SIGNS & SYMPTOMS OF MUSCULOSKELETAL SYSTEM & CONN TISSUE.	.5547	3.5	4.7	26
248	08	MED	TENDONITIS, MYOSITIS & BURSITIS	.6939	4.5	6.0	27
249	08	MED	AFTERCARE, MUSCULOSKELETAL SYSTEM & CONNECTIVE TISSUE.	.6638	3.7	5.5	27
250	08	MED	FX, SPRN, STRN & DISL OF FOREARM, HAND, FOOT AGE >17 WITH CC.	.7174	4.4	6.3	27
251	08	MED	FX, SPRN, STRN & DISL OF FOREARM, HAND, FOOT AGE >17 W/O CC.	.4449	2.7	3.7	26
252	08	MED[1]	FX, SPRN, STRN & DISL OF FOREARM, HAND, FOOT AGE 0–17.	.3615	1.8	1.8	15
253	08	MED	FX, SPRN, STRN & DISL OF UPARM, LOWLEG EX FOOT AGE >17 WITH CC.	.7706	5.4	7.6	28
254	08	MED	FX, SPRN, STRN & DISL OF UPARM, LOWLEG EX FOOT AGE >17 W/O CC.	.4272	3.3	4.5	26
255	08	MED[1]	FX, SPRN, STRN & DISL OF UPARM, LOWLEG EX FOOT AGE 0–17.	.4796	2.9	2.9	26
256	08	MED	OTHER MUSCULOSKELETAL SYSTEM & CONNECTIVE TISSUE DIAGNOSES.	.6366	3.6	4.9	27
257	09	SURG	TOTAL MASTECTOMY FOR MALIGNANCY WITH CC	.8845	3.8	4.6	21
258	09	SURG	TOTAL MASTECTOMY FOR MALIGNANCY W/O CC	.6959	3.0	3.4	13
259	09	SURG	SUBTOTAL MASTECTOMY FOR MALIGNANCY WITH CC	.8372	3.1	4.7	26
260	09	SURG	SUBTOTAL MASTECTOMY FOR MALIGNANCY W/O CC	.5743	2.0	2.5	11
261	09	SURG	BREAST PROC FOR NON-MALIGNANCY EXCEPT BIOPSY & LOCAL EXCISION.	.7272	2.1	2.6	14
262	09	SURG	BREAST BIOPSY & LOCAL EXCISION FOR NON-MALIGNANCY.	.6071	2.3	3.5	25
263	09	SURG	SKIN GRAFT &/OR DEBRID FOR SKN ULCER OR CELLULITIS WITH CC.	2.4460	13.5	19.0	37
264	09	SURG	SKIN GRAFT &/OR DEBRID FOR SKN ULCER OR CELLULITIS W/O CC.	1.2346	7.8	10.7	31
265	09	SURG	SKIN GRAFT &/OR DEBRID EXCEPT FOR SKIN ULCER OR CELLULITIS W CC.	1.4065	5.8	9.0	29
266	09	SURG	SKIN GRAFT &/OR DEBRID EXCEPT FOR SKIN ULCER OR CELLULITIS W/O CC.	.7108	2.9	4.3	26
267	09	SURG	PERIANAL & PILONIDAL PROCEDURES	.6592	2.6	4.3	26
268	09	SURG	SKIN, SUBCUTANEOUS TISSUE & BREAST PLASTIC PROCEDURES.	.8198	2.7	4.3	26
269	09	SURG	OTHER SKIN, SUBCUT TISS & BREAST PROCEDURE WITH CC.	1.7166	7.8	11.6	31
270	09	SURG	OTHER SKIN, SUBCUT TISS & BREAST PROCEDURE W/O CC.	.6456	2.7	3.9	26
271	09	MED	SKIN ULCERS	1.1783	8.1	10.8	31
272	09	MED	MAJOR SKIN DISORDERS WITH CC	1.0206	6.8	8.8	30
273	09	MED	MAJOR SKIN DISORDERS W/O CC	.6514	4.8	6.4	28
274	09	MED	MALIGNANT BREAST DISORDERS WITH CC	1.1183	6.3	9.6	29
275	09	MED	MALIGNANT BREAST DISORDERS W/O CC	.5050	2.7	3.9	26
276	09	MED	NON-MALIGANT BREAST DISORDERS	.6351	4.4	5.8	27
277	09	MED	CELLULITIS AGE >17 WITH CC	.8917	6.6	8.0	30

TABLE 5.—LIST OF DIAGNOSIS RELATED GROUPS (DRGS), RELATIVE WEIGHTING FACTORS, GEOMETRIC MEAN LENGTH OF STAY, AND LENGTH OF STAY OUTLIER CUTOFF POINTS USED IN THE PROSPECTIVE PAYMENT SYSTEM—Continued

				Relative weights	Geometric mean LOS	Arithmetic mean LOS	Outlier threshold
278	09	MED	CELLULITIS AGE >17 W/O CC	.5828	5.0	5.9	28
279	09	MED[1]	CELLULITIS AGE 0–17	.7618	4.2	4.2	24
280	09	MED	TRAUMA TO THE SKIN, SUBCUT TISS & BREAST AGE >17 WITH CC.	.6755	4.4	6.1	27
281	09	MED	TRAUMA TO THE SKIN, SUBCUT TISS & BREAST AGE >17 W/O CC.	.4195	3.0	4.0	26
282	09	MED[1]	TRAUMA TO THE SKIN, SUBCUT TISS & BREAST AGE 0–17.	.3540	2.2	2.2	19
283	09	MED	MINOR SKIN DISORDERS WITH CC	.7253	5.0	6.6	28
284	09	MED	MINOR SKIN DISORDERS W/O CC	.4469	3.4	4.5	26
285	10	SURG	AMPUTAT OF LOWER LIMB FOR ENDOCRINE, NUTRIT, & METABOL DISORDERS.	2.5637	13.3	18.2	36
286	10	SURG	ADRENAL & PITUITARY PROCEDURES	2.2821	8.2	10.1	31
287	10	SURG	SKIN GRAFTS & WOUND DEBRID FOR ENDOC, NUTRIT & METAB DISORDERS.	2.1927	12.4	18.1	35
288	10	SURG	O.R. PROCEDURES FOR OBESITY	2.0725	6.9	10.5	30
289	10	SURG	PARATHYROID PROCEDURES	.9920	3.4	4.9	26
290	10	SURG	THYROID PROCEDURES	.7637	2.5	3.1	16
291	10	SURG	THYROGLOSSAL PROCEDURES	.5074	1.7	2.0	9
292	10	SURG	OTHER ENDOCRINE, NUTRIT & METAB O.R. PROC WITH CC.	2.7658	11.1	16.1	34
293	10	SURG	OTHER ENDOCRINE, NUTRIT & METAB O.R. PROC W/O CC.	1.1010	4.7	7.1	28
294	10	MED	DIABETES AGE >35	.7466	5.4	6.9	28
295	10	MED	DIABETES AGE 0–35	.7562	4.2	5.6	27
296	10	MED	NUTRITIONAL & MISC METABOLIC DISORDERS AGE >17 WITH CC.	.9313	5.6	7.8	29
297	10	MED	NUTRITIONAL & MISC METABOLIC DISORDERS AGE >17 W/O CC.	.5244	3.8	4.8	27
298	10	MED	NUTRITIONAL & MISC METABOLIC DISORDERS AGE 0–17	.5627	3.2	4.6	26
299	10	MED	INBORN ERRORS OF METABOLISM	.8271	4.4	6.4	27
300	10	MED	ENDOCRINE DISORDERS WITH CC	1.0982	6.6	8.7	30
301	10	MED	ENDOCRINE DISORDERS W/O CC	.5777	3.8	5.1	27
302	11	SURG	KIDNEY TRANSPLANT	3.8871	12.9	14.9	36
303	11	SURG	KIDNEY, URETER & MAJOR BLADDER PROCEDURES FOR NEOPLASM.	2.5929	10.3	12.4	33
304	11	SURG	KIDNEY, URETER & MAJOR BLADDER PROC FOR NON-NEOPL WITH CC.	2.3897	9.4	12.7	32
305	11	SURG	KIDNEY, URETER & MAJOR BLADDER PROC FOR NON-NEOPL W/O CC.	1.1127	4.7	5.9	28
306	11	SURG	PROSTATECTOMY WITH CC	1.2474	6.1	8.2	29
307	11	SURG	PROSTATECTOMY W/O CC	.6620	3.3	4.0	18
308	11	SURG	MINOR BLADDER PROCEDURES WITH CC	1.4452	5.8	8.5	29
309	11	SURG	MINOR BLADDER PROCEDURES W/O CC	.7580	2.8	3.7	26
310	11	SURG	TRANSURETHRAL PROCEDURES WITH CC	.9006	3.7	5.2	27
311	11	SURG	TRANSURETHRAL PROCEDURES W/O CC	.5206	2.0	2.5	13
312	11	SURG	URETHRAL PROCEDURES, AGE >17 WITH CC	.8334	3.6	5.4	27
313	11	SURG	URETHRAL PROCEDURES, AGE >17 W/O CC	.4551	2.0	2.6	15
314	11	SURG[1]	URETHRAL PROCEDURES, AGE 0–17	.4470	2.3	2.3	25
315	11	SURG	OTHER KIDNEY & URINARY TRACT O.R. PROCEDURES	2.0341	6.5	11.6	29
316	11	MED	RENAL FAILURE	1.2903	6.2	8.9	29
317	11	MED	ADMIT FOR RENAL DIALYSIS	.5194	2.8	4.0	26
318	11	MED	KIDNEY & URINARY TRACT NEOPLASMS WITH CC	1.1215	5.8	8.6	29
319	11	MED	KIDNEY & URINARY TRACT NEOPLASMS W/O CC	.5298	2.5	3.4	25
320	11	MED	KIDNEY & URINARY TRACT INFECTIONS AGE >17 WITH CC.	.9677	6.3	7.9	29
321	11	MED	KIDNEY & URINARY TRACT INFECTIONS AGE >17 W/O CC.	.6112	4.6	5.4	26
322	11	MED	KIDNEY & URINARY TRACT INFECTIONS AGE 0–17	.4952	3.9	4.5	21
323	11	MED	URINARY STONES WITH CC, &/OR ESW LITHOTRIPSY	.7290	3.0	4.1	26
324	11	MED	URINARY STONES W/O CC	.3864	2.0	2.4	12
325	11	MED	KIDNEY & URINARY TRACT SIGNS & SYMPTOMS AGE >17 WITH CC.	.6607	4.1	5.6	27
326	11	MED	KIDNEY & URINARY TRACT SIGNS & SYMPTOMS AGE >17 W/O CC.	.4024	2.7	3.4	21
327	11	MED[1]	KIDNEY & URINARY TRACT SIGNS & SYMPTOMS AGE 0–17.	.7169	3.1	3.1	26

TABLE 5.—LIST OF DIAGNOSIS RELATED GROUPS (DRGS), RELATIVE WEIGHTING FACTORS, GEOMETRIC MEAN LENGTH OF STAY, AND LENGTH OF STAY OUTLIER CUTOFF POINTS USED IN THE PROSPECTIVE PAYMENT SYSTEM—Continued

				Relative weights	Geometric mean LOS	Arithmetic mean LOS	Outlier threshold
328	11	MED	URETHRAL STRICTURE AGE >17 WITH CC	.6597	3.6	5.0	27
329	11	MED	URETHRAL STRICTURE AGE >17 W/O CC	.3881	1.9	2.4	14
330	11	MED[1]	URETHRAL STRICTURE AGE 0–17	.2882	1.6	1.6	9
331	11	MED	OTHER KIDNEY & URINARY TRACT DIAGNOSES AGE >17 WITH CC.	.9829	5.2	7.2	28
332	11	MED	OTHER KIDNEY & URINARY TRACT DIAGNOSES AGE >17 W/O CC.	.5430	2.9	4.1	26
333	11	MED	OTHER KIDNEY & URINARY TRACT DIAGNOSES AGE 0–17.	.9641	5.0	7.2	28
334	12	SURG	MAJOR MALE PELVIC PROCEDURES W CC	1.7535	7.4	8.1	25
335	12	SURG	MAJOR MALE PELVIC PROCEDURES W/O CC	1.3630	6.2	6.6	20
336	12	SURG	TRANSURETHRAL PROSTATECTOMY WITH CC	.8540	4.3	5.2	23
337	12	SURG	TRANSURETHRAL PROSTATECTOMY W/O CC	.6050	3.2	3.6	11
338	12	SURG	TESTES PROCEDURES, FOR MALIGNANCY	.9395	3.8	5.8	27
339	12	SURG	TESTES PROCEDURES, NON-MALIGNANCY AGE >17	.8093	3.1	4.6	26
340	12	SURG[1]	TESTES PROCEDURES, NON-MALIGNANCY AGE 0–17	.4483	2.4	2.4	13
341	12	SURG	PENIS PROCEDURES	.9646	3.1	4.0	25
342	12	SURG	CIRCUMCISION AGE >17	.5848	2.6	3.8	26
343	12	SURG[1]	CIRCUMCISION AGE 0–17	.3916	1.7	1.7	6
344	12	SURG	OTHER MALE REPRODUCTIVE SYSTEM O.R. PROCEDURES FOR MALIGNANCY.	1.0183	3.1	4.3	26
345	12	SURG	OTHER MALE REPRODUCTIVE SYSTEM O.R. PROC EXCEPT FOR MALIGNANCY.	.7344	3.2	4.6	26
346	12	MED	MALIGNANCY, MALE REPRODUCTIVE SYSTEM, WITH CC	.9338	5.3	7.8	28
347	12	MED	MALIGNANCY, MALE REPRODUCTIVE SYSTEM, W/O CC	.4928	2.5	3.8	26
348	12	MED	BENIGN PROSTATIC HYPERTROPHY WITH CC	.6856	3.9	5.5	27
349	12	MED	BENIGN PROSTATIC HYPERTROPHY W/O CC	.3904	2.3	3.3	22
350	12	MED	INFLAMMATION OF THE MALE REPRODUCTIVE SYSTEM	.6668	4.6	5.5	27
351	12	MED[1]	STERILIZATION, MALE	.3447	1.3	1.3	5
352	12	MED	OTHER MALE REPRODUCTIVE SYSTEM DIAGNOSES	.5326	3.1	4.4	26
353	13	SURG	PELVIC EVISCERATION, RADICAL HYSTERECTOMY & RADICAL VULVECTOMY.	1.9624	8.8	10.7	32
354	13	SURG	UTERINE,ADNEXA PROC FOR NON-OVARIAN/ADNEXAL MALIG WITH CC.	1.3794	6.5	7.6	29
355	13	SURG	UTERINE,ADNEXA PROC FOR NON-OVARIAN/ADNEXAL MALIG W/O CC.	.8717	4.4	4.7	13
356	13	SURG	FEMALE REPRODUCTIVE SYSTEM RECONSTRUCTIVE PROCEDURES.	.7096	3.5	4.0	15
357	13	SURG	UTERINE & ADNEXA PROC FOR OVARIAN OR ADNEXAL MALIG.	2.3153	9.4	11.5	32
358	13	SURG	UTERINE & ADNEXA PROC FOR NON-MALIGNANCY WITH CC.	1.1042	5.2	5.9	21
359	13	SURG	UTERINE & ADNEXA PROC FOR NON-MALIGNANCY W/O CC.	.7834	3.9	4.1	11
360	13	SURG	VAGINA, CERVIX & VULVA PROCEDURES	.8126	3.8	4.7	25
361	13	SURG	LAPAROSCOPY & INCISIONAL TUBAL INTERRUPTION	1.0037	3.2	5.0	26
362	13	SURG[1]	ENDOSCOPIC TUBAL INTERRUPTION	.5151	1.4	1.4	5
363	13	SURG	D&C, CONIZATION & RADIO-IMPLANT, FOR MALIGNANCY	.6340	2.9	3.9	23
364	13	SURG	D&C, CONIZATION EXCEPT FOR MALIGNANCY	.5930	2.6	3.8	26
365	13	SURG	OTHER FEMALE REPRODUCTIVE SYSTEM O.R. PROCEDURES.	1.7034	6.6	9.6	30
366	13	MED	MALIGNANCY, FEMALE REPRODUCTIVE SYSTEM WITH CC.	1.1948	6.1	9.4	29
367	13	MED	MALIGNANCY, FEMALE REPRODUCTIVE SYSTEM W/O CC	.4769	2.6	3.6	26
368	13	MED	INFECTIONS, FEMALE REPRODUCTIVE SYSTEM	.9489	5.8	7.5	29
369	13	MED	MENSTRUAL & OTHER FEMALE REPRODUCTIVE SYSTEM DISORDERS.	.5201	3.0	4.4	26
370	14	SURG	CESAREAN SECTION W CC	.8699	4.9	5.9	24
371	14	SURG	CESAREAN SECTION W/O CC	.6289	3.8	4.0	10
372	14	MED	VAGINAL DELIVERY W COMPLICATING DIAGNOSES	.5174	3.1	4.3	26
373	14	MED	VAGINAL DELIVERY W/O COMPLICATING DIAGNOSES	.3247	2.0	2.2	8
374	14	SURG	VAGINAL DELIVERY W STERILIZATION &/OR D&C	.5859	2.6	3.2	15
375	14	SURG[1]	VAGINAL DELIVERY W O.R. PROC EXCEPT STERIL &/OR D&C.	.7049	4.4	4.4	27
376	14	MED	POSTPARTUM & POST ABORTION DIAGNOSES W/O O.R. PROCEDURE.	.3894	2.6	3.5	24

TABLE 5.—LIST OF DIAGNOSIS RELATED GROUPS (DRGS), RELATIVE WEIGHTING FACTORS, GEOMETRIC MEAN LENGTH OF STAY, AND LENGTH OF STAY OUTLIER CUTOFF POINTS USED IN THE PROSPECTIVE PAYMENT SYSTEM—Continued

				Relative weights	Geometric mean LOS	Arithmetic mean LOS	Outlier threshold
377	14	SURG	POSTPARTUM & POST ABORTION DIAGNOSES W O.R. PROCEDURE.	.8600	3.0	4.4	26
378	14	MED	ECTOPIC PREGNANCY	.7580	3.1	3.6	16
379	14	MED	THREATENED ABORTION	.3346	2.4	3.4	25
380	14	MED	ABORTION W/O D&C	.2958	1.6	2.1	10
381	14	SURG	ABORTION W D&C, ASPIRATION CURETTAGE OR HYSTEROTOMY.	.3943	1.6	2.0	9
382	14	MED	FALSE LABOR	.1240	1.2	1.3	4
383	14	MED	OTHER ANTEPARTUM DIAGNOSES W MEDICAL COMPLICATIONS.	.4059	3.1	4.3	26
384	14	MED	OTHER ANTEPARTUM DIAGNOSES W/O MEDICAL COMPLICATIONS.	.2620	2.1	2.8	19
385	15	MED[1]	NEONATES, DIED OR TRANSFERRED TO ANOTHER ACUTE CARE FACILITY.	1.2648	1.8	1.8	25
386	15	MED[1]	EXTREME IMMATURITY OR RESPIRATORY DISTRESS SYNDROME, NEONATE.	3.7722	17.9	17.9	41
387	15	MED[1]	PREMATURITY W MAJOR PROBLEMS	1.8889	13.3	13.3	36
388	15	MED[1]	PREMATURITY W/O MAJOR PROBLEMS	1.1965	8.6	8.6	32
389	15	MED	FULL TERM NEONATE W MAJOR PROBLEMS	1.5295	5.3	10.7	28
390	15	MED	NEONATE W OTHER SIGNIFICANT PROBLEMS	.9165	4.4	7.0	27
391	15	MED[1]	NORMAL NEWBORN	.2294	3.1	3.1	11
392	16	SURG	SPLENECTOMY AGE >17	3.3043	10.6	14.3	34
393	16	SURG[1]	SPLENECTOMY AGE 0–17	1.5723	9.1	9.1	32
394	16	SURG	OTHER O.R. PROCEDURES OF THE BLOOD AND BLOOD FORMING ORGANS.	1.6781	5.3	9.9	28
395	16	MED	RED BLOOD CELL DISORDERS AGE >17	.8057	4.5	6.2	27
396	16	MED	RED BLOOD CELL DISORDERS AGE 0–17	.3079	1.8	2.3	13
397	16	MED	COAGULATION DISORDERS	1.2292	5.3	7.3	28
398	16	MED	RETICULOENDOTHELIAL & IMMUNITY DISORDERS WITH CC.	1.2431	6.1	7.8	29
399	16	MED	RETICULOENDOTHELIAL & IMMUNITY DISORDERS W/O CC.	.6822	4.0	5.1	27
400	17	SURG	LYMPHOMA & LEUKEMIA W MAJOR O.R. PROCEDURE	2.5309	8.1	12.4	31
401	17	SURG	LYMPHOMA & NON-ACUTE LEUKEMIA W OTHER O.R. PROC W CC.	2.3778	10.0	14.6	33
402	17	SURG	LYMPHOMA & NON-ACUTE LEUKEMIA W OTHER O.R. PROC W/O CC.	.8850	3.3	5.1	26
403	17	MED	LYMPHOMA & NON-ACUTE LEUKEMIA W CC	1.6757	7.8	11.3	31
404	17	MED	LYMPHOMA & NON-ACUTE LEUKEMIA W/O CC	.7377	3.8	5.4	27
405	17	MED[1]	ACUTE LEUKEMIA W/O MAJOR O.R. PROCEDURE AGE 0–17.	1.0761	4.9	4.9	28
406	17	SURG	MYELOPROLIF DISORD OR POORLY DIFF NEOPL W MAJ O.R.PROC W CC.	2.6133	9.9	13.5	33
407	17	SURG	MYELOPROLIF DISORD OR POORLY DIFF NEOPL W MAJ O.R.PROC W/O CC.	1.1204	4.5	5.9	28
408	17	SURG	MYELOPROLIF DISORD OR POORLY DIFF NEOPL W OTHER O.R.PROC.	1.4241	4.9	8.4	28
409	17	MED	RADIOTHERAPY	.9922	5.8	8.5	29
410	17	MED	CHEMOTHERAPY WITHOUT ACUTE LEUKEMIA AS SECONDARY DIAGNOSIS.	.6679	2.9	3.6	20
411	17	MED	HISTORY OF MALIGNANCY W/O ENDOSCOPY	.4152	2.2	2.9	20
412	17	MED	HISTORY OF MALIGNANCY W ENDOSCOPY	.4758	2.1	3.2	25
413	17	MED	OTHER MYELOPROLIF DIS OR POORLY DIFF NEOPL DIAG WITH CC.	1.3849	7.2	10.6	30
414	17	MED	OTHER MYELOPROLIF DIS OR POORLY DIFF NEOPL DIAG W/O CC.	.7091	4.1	6.0	27
415	18	SURG	O.R. PROCEDURE FOR INFECTIOUS & PARASITIC DISEASES.	3.5723	14.2	19.8	37
416	18	MED	SEPTECEMIA AGE >17	1.5141	7.2	10.0	30
417	18	MED	SEPTECEMIA AGE 0–17	.7002	4.9	5.7	27
418	18	MED	POSTOPERATIVE & POST-TRAUMATIC INFECTIONS	.9665	6.2	7.9	29
419	18	MED	FEVER OF UNKNOWN ORIGIN AGE >17 WITH CC	.9511	5.5	7.0	28
420	18	MED	FEVER OF UNKNOWN ORIGIN AGE >17 W/O CC	.6365	4.2	5.1	27
421	18	MED	VIRAL ILLNESS AGE >17	.6758	4.2	5.3	27
422	18	MED	VIRAL ILLNESS & FEVER OF UNKNOWN ORIGIN AGE 0–17.	.5888	3.5	4.5	27
423	18	MED	OTHER INFECTIOUS & PARASITIC DISEASES DIAGNOSES	1.6246	7.7	10.7	31

TABLE 5.—LIST OF DIAGNOSIS RELATED GROUPS (DRGS), RELATIVE WEIGHTING FACTORS, GEOMETRIC MEAN LENGTH OF STAY, AND LENGTH OF STAY OUTLIER CUTOFF POINTS USED IN THE PROSPECTIVE PAYMENT SYSTEM—Continued

				Relative weights	Geometric mean LOS	Arithmetic mean LOS	Outlier threshold
424	19	SURG	O.R. PROCEDURE W PRINCIPAL DIAGNOSES OF MENTAL ILLNESS.	2.4684	13.9	23.2	37
425	19	MED	ACUTE ADJUST REACT & DISTURBANCES OF PSYCHOSOCIAL DYSFUNCTION.	.7127	4.3	6.0	27
426	19	MED	DEPRESSIVE NEUROSES	.6128	5.0	7.2	28
427	19	MED	NEUROSES EXCEPT DEPRESSIVE	.6184	4.9	7.3	28
428	19	MED	DISORDERS OF PERSONALITY & IMPULSE CONTROL	.7084	5.7	9.2	29
429	19	MED	ORGANIC DISTURBANCES & MENTAL RETARDATION	.9379	7.4	11.0	30
430	19	MED	PSYCHOSES	.9153	8.4	12.0	31
431	19	MED	CHILDHOOD MENTAL DISORDERS	.6980	5.8	8.7	29
432	19	MED	OTHER MENTAL DISORDER DIAGNOSES	.7357	4.5	7.4	27
433	20	MED	ALCOHOL/DRUG ABUSE OR DEPENDENCE, LEFT AMA	.3512	2.8	4.2	26
434	20	MED	ALC/DRUG ABUSE OR DEPENDENCE, DETOX OR OTHER SYMPT TRT WITH CC.	.7321	5.1	6.9	28
435	20	MED	ALC/DRUG ABUSE OR DEPENDENCE, DETOX OR OTHER SYMPT TRT W/O CC.	.4529	4.2	5.8	27
436	20	MED	ALC/DRUG DEPENDENCE W REHABILITATION THERAPY	.9691	15.1	17.9	38
437	20	MED	ALC/DRUG DEPENDENCE, COMBINED REHAB & DETOX THERAPY.	.9970	12.8	15.2	36
438			NO LONGER VALID	.0000	.0	.0	0
439	21	SURG	SKIN GRAFTS FOR INJURIES	1.3853	6.1	9.9	29
440	21	SURG	WOUND DEBRIDEMENTS FOR INJURIES	1.7125	7.6	11.9	31
441	21	SURG	HAND PROCEDURES FOR INJURIES	.7122	2.2	3.6	25
442	21	SURG	OTHER O.R. PROCEDURES FOR INJURIES WITH CC	1.9292	5.8	9.3	29
443	21	SURG	OTHER O.R. PROCEDURES FOR INJURIES W/O CC	.7398	2.4	3.4	25
444	21	MED	TRAUMATIC INJURY AGE > 17 W CC	.7431	4.9	6.5	28
445	21	MED	TRAUMATIC INJURY AGE > 17 W/O CC	.4635	3.2	4.1	26
446	21	MED[1]	TRAUMATIC INJURY AGE 0–17	.4959	2.4	2.4	22
447	21	MED	ALLERGIC REACTIONS AGE >17	.4869	2.5	3.3	22
448	21	MED[1]	ALLERGIC REACTIONS AGE 0–17	.3588	2.9	2.9	17
449	21	MED	POISONING & TOXIC EFFECTS OF DRUGS AGE >17 WITH CC.	.7929	3.8	5.4	27
450	21	MED	POISONING & TOXIC EFFECTS OF DRUGS AGE >17 W/O CC.	.4224	2.2	2.9	19
451	21	MED	POISONING & TOXIC EFFECTS OF DRUGS AGE 0–17	1.0266	4.2	6.0	27
452	21	MED	COMPLICATIONS OF TREATMENT WITH CC	.8232	4.0	5.8	27
453	21	MED	COMPLICATIONS OF TREATMENT W/O CC	.4177	2.6	3.5	23
454	21	MED	OTHER INJURY, POISONING & TOXIC EFF DIAG WITH CC	.9107	4.3	6.6	27
455	21	MED	OTHER INJURY, POISONING & TOXIC EFF DIAG W/O CC	.4166	2.3	3.2	23
456	22	MED	BURNS, TRANSFERRED TO ANOTHER ACUTE CARE FACILITY.	2.1688	5.1	10.4	28
457	22	MED	EXTENSIVE BURNS W/O O.R. PROCEDURE	1.6312	2.6	5.3	26
458	22	SURG	NON-EXTENSIVE BURNS W SKIN GRAFT	3.7459	15.2	21.8	38
459	22	SURG	NON-EXTENSIVE BURNS W WOUND DEBRIDEMENT OR OTHER O.R. PROC.	2.1042	10.7	15.4	34
460	22	MED	NON-EXTENSIVE BURNS W/O O.R. PROCEDURE	1.0508	6.0	8.7	29
461	23	SURG	O.R. PROC W DIAGNOSES OF OTHER CONTACT W HEALTH SERVICES.	.8656	2.4	5.0	25
462	23	MED	REHABILITATION	1.7205	13.5	17.0	36
463	23	MED	SIGNS & SYMPTOMS W CC	.7249	4.7	6.4	28
464	23	MED	SIGNS & SYMPTOMS W/O CC	.4591	2.9	3.8	25
465	23	MED	AFTERCARE W HISTORY OF MALIGNANCY AS SECONDARY DIAGNOSIS.	.3740	1.9	2.9	20
466	23	MED	AFTERCARE W/O HISTORY OF MALIGNANCY AS SECONDARY DIAGNOSIS.	.5516	2.4	4.6	25
467	23	MED	OTHER FACTORS INFLUENCING HEALTH STATUS	.4168	2.5	5.1	26
468			EXTENSIVE O.R. PROCEDURE UNRELATED TO PRINCIPAL DIAGNOSIS.	3.4842	12.9	18.5	36
469			PRINCIPAL DIAGNOSIS INVALID AS DISCHARGE DIAGNOSIS[2].	.0000	.0	.0	0
470			UNGROUPABLE[2]	.0000	.0	.0	0
471	08	SURG	BILATERAL OR MULTIPLE MAJOR JOINT PROCS OF LOWER EXTREMITY.	3.8651	10.6	12.4	34
472	22	SURG	EXTENSIVE BURNS W O.R. PROCEDURE	11.6933	17.8	31.0	41
473	17	MED	ACUTE LEUKEMIA W/O MAJOR O.R. PROCEDURE AGE >17.	3.5702	9.6	16.9	33
474	04		NO LONGER VALID	.0000	.0	.0	0

TABLE 5.—LIST OF DIAGNOSIS RELATED GROUPS (DRGS), RELATIVE WEIGHTING FACTORS, GEOMETRIC MEAN LENGTH OF STAY, AND LENGTH OF STAY OUTLIER CUTOFF POINTS USED IN THE PROSPECTIVE PAYMENT SYSTEM—Continued

				Relative weights	Geometric mean LOS	Arithmetic mean LOS	Outlier threshold
475	04	MED	RESPIRATORY SYSTEM DIAGNOSIS WITH VENTILATOR SUPPORT.	3.7175	9.8	14.2	33
476	.....		PROSTATIC O.R. PROCEDURE UNRELATED TO PRINCIPAL DIAGNOSIS.	2.2361	13.4	16.7	36
477	.....		NON-EXTENSIVE O.R. PROCEDURE UNRELATED TO PRINCIPAL DIAGNOSIS.	1.4628	6.0	9.9	29
478	05	SURG	OTHER VASCULAR PROCEDURES W CC	2.1897	6.6	10.0	30
479	05	SURG	OTHER VASCULAR PROCEDURES W/O CC	1.3027	4.0	5.3	27
480	.....	SURG	LIVER TRANSPLANT	19.4679	27.6	37.2	51
481	.....	SURG	BONE MARROW TRANSPLANT	14.3709	36.2	39.7	59
482	.....	SURG	TRACHEOSTOMY FOR FACE, MOUTH AND NECK DIAGNOSES.	3.5756	13.3	17.6	36
483	.....	SURG	TRACHEOSTOMY EXCEPT FOR FACE, MOUTH AND NECK DIAGNOSES.	16.9858	43.9	56.7	67
484	24	SURG	CRANIOTOMY FOR MULTIPLE SIGNIFICANT TRAUMA	5.6612	13.3	20.6	36
485	24	SURG	LIMB REATTACH., HIP AND FEMUR PROCS FOR MULTI SIGN TRAUMA.	3.2361	12.5	15.8	35
486	24	SURG	OTHER O.R. PROCEDURES FOR MULTIPLE SIGNIFICANT TRAUMA.	4.6756	10.2	16.7	33
487	24	MED	OTHER MULTIPLE SIGNIFICANT TRAUMA	1.9379	7.3	11.1	30
488	25	SURG	HIV W EXTENSIVE O.R. PROCEDURE	4.3859	15.8	22.1	39
489	25	MED	HIV W MAJOR RELATED CONDITION	1.8468	8.8	13.4	32
490	25	MED	HIV W OR W/O OTHER RELATED CONDITION	1.1174	5.3	8.4	28
491	08	SURG	MAJOR JOINT & LIMB REATTACHMENT PROCEDURES—UPPER EXTREMITY.	1.6092	5.0	6.0	28
492	17	MED	CHEMOTHERAPY WITH ACUTE LEUKEMIA AS SECONDARY DIAGNOSIS.	3.5861	10.9	17.2	34
493	07	SURG	LAPAROSCOPIC CHOLECYSTECTOMY W/O C.D.E. WITH CC.	1.5268	4.3	6.2	27
494	07	SURG	LAPAROSCOPIC CHOLECYSTECTOMY W/O C.D.E. W/O CC.	.8233	1.7	2.3	13

[1] Medicare data have been supplemented by data from Maryland and Michigan for low volume DRGS.
[2] DRGS 469 and 470 contain cases which could not be assigned to valid DRGS.
Note: Geometric mean is used only to determine payment for transfer cases.
Note: Arithmetic mean is used only to determine payment for outlier cases.
Note: Relative weights are based on Medicare patient data and may not be appropriate for other patients.

TABLE 6A.—NEW DIAGNOSIS CODES

Diagnosis code	Description	CC	MDC	DRG
077.98	Unspecified disease of conjunctiva due to Chlamydiae	N	02	46, 47, 48
077.99	Unspecified diseases of conjunctiva due to viruses	N	02	46, 47, 48
078.10	Other diseases due to viruses and Chlamydiae, viral warts, unspecified	N	09	283, 284
078.11	Other diseases due to viruses and Chlamydiae, Condyloma acuminatum	N	09	283, 284
078.19	Other diseases due to viruses and Chlamydiae, other specified viral warts	N	09	283, 284
078.88	Other specified diseases due to Chlamydiae	N	18	421, 422
079.4	Human papilloma virus	N	18	421, 422
079.50	Retrovirus, unspecified	N	18	421, 422
079.51	Human T-cell lymphotrophic virus, type I [HTLV–I]	N	18	421, 422
079.52	Human T-cell lymphotrophic virus, type II [HTLV–II]	N	18	421, 422
079.53	Human Immunodeficiency virus, type 2 [HIV 2]	N	18	421, 422
079.59	Other specified retrovirus	N	18	421, 422
079.88	Other specified chlamydial infection	N	18	421, 422
079.89	Other specified viral infection	N	18	421, 422
079.98	Unspecified chlamydial infection	N	18	421, 422
			25	490
079.99	Unspecified viral infection	N	18	421, 422
			25	490
088.82	Babesiosis	N	18	423
114.4	Chronic pulmonary coccidioidomycosis	N	04	79, 80, 81
			25	489
114.5	Pulmonary coccidioidomycosis, unspecified	N	04	79, 80, 81
			25	489
250.02	Diabetes mellitus without mention of complication, type II [non-insulin dependent type] [NIDDM type] [adult-onset type] or unspecified type, uncontrolled	Y	10	294, 295

TABLE 6A.—NEW DIAGNOSIS CODES—Continued

Diagnosis code	Description	CC	MDC	DRG
250.03	Diabetes mellitus without mention of complication, type I [insulin dependent type] [IDDM] [juvenile type], uncontrolled	Y	10	294, 295
250.12	Diabetes with ketoacidosis, type II [non-insulin dependent type] [NIDDM type] [adult-onset type] or unspecified type, uncontrolled	Y	10	294, 295
250.13	Diabetes with ketoacidosis, type I [insulin dependent type] [IDDM] [juvenile type], uncontrolled	Y	10	294, 295
250.22	Diabetes with hyperosmolarity, type II [non-insulin dependent type] [NIDDM type] [adult-onset type] or unspecified type, uncontrolled	Y	10	294, 295
250.23	Diabetes with hyperosmolarity, type I [insulin dependent type] [IDDM] [juvenile type], uncontrolled	Y	10	294, 295
250.32	Diabetes with other coma, type II [non-insulin dependent type] [NIDDM type] [adult-onset type] or unspecified type, uncontrolled	Y	10	294, 295
250.33	Diabetes with other coma, type I [insulin dependent type] [IDDM] [juvenile type], uncontrolled	Y	10	294, 295
250.42	Diabetes with renal manifestations, type II [non-insulin dependent type] [NIDDM type] [adult-onset type] or unspecified type, uncontrolled	Y	11	331, 332, 333
250.43	Diabetes with renal manifestations, type I [insulin dependent type] [IDDM] [juvenile type], uncontrolled	Y	11	331, 332, 333
250.52	Diabetes with ophthalmic manifestations, type II [non-insulin dependent type] [NIDDM type] [adult-onset type] or unspecified type, uncontrolled	Y	02	46, 47, 48
250.53	Diabetes with ophthalmic manifestations, type I [insulin dependent type] [IDDM] [juvenile type], uncontrolled	Y	02	46, 47, 48
250.62	Diabetes with neurological manifestations, type II [non-insulin dependent type] [NIDDM type] [adult-onset type] or unspecified type, uncontrolled	Y	01	18, 19
250.63	Diabetes with neurological manifestations, type I [insulin dependent type] [IDDM] [juvenile type], uncontrolled	Y	01	18, 19
250.72	Diabetes with peripheral circulatory disorders, type II [non-insulin dependent type] [NIDDM type] [adult-onset type] or unspecified type, uncontrolled	Y	05	130, 131
250.73	Diabetes with peripheral circulatory disorders, type I [insulin dependent type] [IDDM] [juvenile type], uncontrolled	Y	05	130, 131
250.82	Diabetes with other specified manifestations, type II [non-insulin dependent type] [NIDDM type] [adult-onset type] or unspecified type, uncontrolled	Y	10	294, 295
250.83	Diabetes with other specified manifestations, type I [insulin dependent type] [IDDM] [juvenile type], uncontrolled	Y	10	294, 295
250.92	Diabetes with unspecified complication, type II [non-insulin dependent type] [NIDDM type] [adult-onset type] or unspecified type, uncontrolled	Y	10	294, 295
250.93	Diabetes with unspecified complication, type I [insulin dependent type] [IDDM] [juvenile type], uncontrolled	Y	10	294, 295
283.10	Non-autoimmune hemolytic anemia, unspecified	Y	15	387, 389 [1]
			16	395, 396
			25	490
283.11	Hemolytic uremic syndrome	Y	15	387, 389 [1]
			16	395, 396
			25	490
283.19	Other non-autoimmune hemolytic anemias	Y	15	387, 389 [1]
			16	395, 396
			25	490
337.20	Reflex sympathetic dystrophy, unspecified	N	01	18, 19
337.21	Reflex sympathetic dystrophy of the upper limb	N	01	18, 19
337.22	Reflex sympathetic dystrophy of the lower limb	N	01	18, 19
337.29	Reflex sympathetic dystrophy of other specified site	N	01	18, 19
344.81	Other specified paralytic syndromes, Locked-in state	N	01	34, 35
344.89	Other specified paralytic syndromes	N	01	34, 35
355.71	Causalgia of lower limb	N	01	18, 19
355.79	Other mononeuritis of lower limb	N	01	18, 19
433.00	Occlusion and stenosis of basilar artery, without mention of cerebral infarction	N	01	15
433.01	Occlusion and stenosis of basilar artery, with cerebral infarction	Y	01	14
			15	387, 389 [1]
433.10	Occlusion and stenosis of carotid artery, without mention of cerebral infarction	N	01	15
433.11	Occlusion and stenosis of carotid artery, with cerebral infarction	Y	01	14
			15	387, 389 [1]
433.20	Occlusion and stenosis of vertebral artery, without mention of cerebral infarction	N	01	15
433.21	Occlusion and stenosis of vertebral artery, with cerebral infarction	Y	01	14
			15	387, 389 [1]
433.30	Occlusion and stenosis of multiple and bilateral arteries, without mention of cerebral infarction	N	01	15
433.31	Occlusion and stenosis of multiple and bilateral arteries, with cerebral infarction	Y	01	14
			15	387, 389 [1]
433.80	Occlusion and stenosis of other specified precerebral artery, without mention of cerebral infarction	N	01	15
433.81	Occlusion and stenosis of other specified precerebral artery, with cerebral infarction	Y	01	14

TABLE 6A.—NEW DIAGNOSIS CODES—Continued

Diagnosis code	Description	CC	MDC	DRG
			15	387, 389 [1]
433.90	Occlusion and stenosis of unspecified precerebral artery, without mention of cerebral infarction	N	01	15
433.91	Occlusion and stenosis of unspecified precerebral artery, with cerebral infarction	Y	01	14
			15	387, 389 [1]
434.00	Cerebral thrombosis without mention of cerebral infarction	N	01	15
			15	387, 389 [1]
434.01	Cerebral thrombosis with cerebral infarction	Y	01	14
			15	387, 389 [1]
434.10	Cerebral embolism without mention of cerebral infarction	N	01	15
			15	387, 389 [1]
434.11	Cerebral embolism with cerebral infarction	Y	01	14
			15	387, 389 [1]
434.90	Cerebral artery occlusion, unspecified, without mention of cerebral infarction	N	01	15
			15	387, 389 [1]
434.91	Cerebral artery occlusion, unspecified, with cerebral infarction	Y	01	14
			15	387, 389 [1]
440.23	Atherosclerosis of the extremities with ulceration	N	05	130, 131
440.24	Atherosclerosis of the extremities with gangrene	Y	05	130, 131
			15	387, 389 [1]
440.29	Other atherosclerosis of the extremities	N	05	130, 131
441.6	Thoracoabdominal aneurysm, ruptured	Y	05	130, 131
441.7	Thoracoabdominal aneurysm, without mention of rupture	N	05	130, 131
451.82	Phlebitis and thrombophlebitis of superficial veins of upper extremities	N	05	130, 131
451.83	Phlebitis and thrombophlebitis of deep veins of upper extremities	N	05	130, 131
451.84	Phlebitis and thrombophlebitis of upper extremities, unspecified	N	05	130, 131
530.10	Esophagitis, unspecified	N	06	182, 183, 184
530.11	Reflux esophagitis	N	06	182, 183, 184
530.19	Other esophagitis	N	06	182, 183, 184
530.81	Esophageal reflux	N	06	182, 183, 184
530.82	Esophageal hemorrhage	Y	06	174, 175
530.83	Esophageal leukoplakia	N	06	182, 183, 184
530.84	Tracheoesophageal fistula	Y	06	182, 183, 184
			15	387, 389 [1]
530.89	Other specified disorders of the esophagus	N	06	182, 183, 184
704.02	Telogen effluvium	N	09	283, 284
733.10	Pathologic fracture, unspecified site	Y	08	239
			15	387, 389 [1]
733.11	Pathologic fracture of the humerus	Y	08	239
			15	387, 389 [1]
733.12	Pathologic fracture of distal radius and ulna	Y	08	239
			15	387, 389 [1]
733.13	Pathologic fracture of vertebrae	Y	08	239
			15	387, 389 [1]
733.14	Pathologic fracture of neck of femur	Y	08	239
			15	387, 389 [1]
733.15	Pathologic fracture of other specified part of femur	Y	08	239
			15	387, 389 [1]
733.16	Pathologic fracture of tibia and fibula	Y	08	239
			15	387, 389 [1]
733.19	Pathologic fracture of other specified site	Y	08	239
			15	387, 389 [1]
747.60	Anomaly of the peripheral vascular system, unspecified site	N	05	130, 131
747.61	Gastrointestinal vessel anomaly	N	05	130, 131
747.62	Renal vessel anomaly	N	05	130, 131
747.63	Upper limb vessel anomaly	N	05	130, 131
747.64	Lower limb vessel anomaly	N	05	130, 131
747.69	Anomalies of other specified sites of peripheral vascular system	N	05	130, 131
747.82	Spinal vessel anomaly	N	01	34, 35
780.03	Persistent vegetative state	Y	01	23
			15	387, 389 [1]
788.20	Retention of urine, unspecified	Y	11	325, 326, 327
			15	387, 389 [1]
788.21	Incomplete bladder emptying	N	11	325, 326, 327
			15	387, 389 [1]
788.29	Other specified retention of urine	Y	11	325, 326, 327
			15	387, 389 [1]
788.41	Urinary frequency	N	11	325, 326, 327
788.42	Polyuria	N	11	325, 326, 327
788.43	Nocturia	N	11	325, 326, 327
788.61	Splitting of urinary stream	N	11	325, 326, 327

TABLE 6A.—NEW DIAGNOSIS CODES—Continued

Diagnosis code	Description	CC	MDC	DRG
788.62	Slowing of urinary stream	N	11	325, 326, 327
788.69	Other abnormality of urination	N	11	325, 326, 327
790.91	Abnormal arterial blood gases	N	23	463, 464
790.92	Abnormal coagulation profile	N	23	463, 464
790.93	Elevated prostate specific antigen (PSA)	N	23	463, 464
790.99	Other nonspecific findings on examination of blood	N	23	463, 464
925.1	Crushing injury of face and scalp	Y	21	444, 445, 446
			24	487[2]
			.....	482
925.2	Crushing injury of neck	Y	21	444, 445, 446
			24	487[2]
			.....	482
995.60	Anaphylactic shock due to unspecified food	N	21	447, 448
995.61	Anaphylactic shock due to peanuts	N	21	447, 448
995.62	Anaphylactic shock due to crustaceans	N	21	447, 448
995.63	Anaphylactic shock due to fruits and vegetables	N	21	447, 448
995.64	Anaphylactic shock due to tree nuts and seeds	N	21	447, 448
995.65	Anaphylactic shock due to fish	N	21	447, 448
995.66	Anaphylactic shock due to food additives	N	21	447, 448
995.67	Anaphylactic shock due to milk products	N	21	447, 448
995.68	Anaphylactic shock due to eggs	N	21	447, 448
995.69	Anaphylactic shock due to other specified food	N	21	447, 448
V05.3	Need for inoculation against viral hepatitis	N	23	467
V05.4	Need for inoculation against varicella	N	23	467
V09.0	Infection with microorganisms resistant to penicillins	N	18	423
V09.1	Infection with microorganisms resistant to cephalosporins and other B-lactam antibiotics	N	18	423
V09.2	Infection with microorganisms resistant to macrolides	N	18	423
V09.3	Infection with microorganisms resistant to tetracyclines	N	18	423
V09.4	Infection with microorganisms resistant to aminoglycosides	N	18	423
V09.50	Infection with microorganisms resistant to quinolones and fluoroquinolones, without mention of resistance to multiple quinolones and fluoroquinolones	N	18	423
V09.51	Infection with microorganisms resistant to quinolones and fluoroquinolones, with resistance to multiple quinolones and fluoroquinolones	N	18	423
V09.6	Infection with microorganisms resistant to sulfonamides	N	18	423
V09.70	Infection with microorganisms resistant to other specified antimycobacterial agents, without mention of resistance to multiple antimycobacterial agents	N	18	423
V09.71	Infection with microorganisms resistant to other specified antimycobacterial agents, with resistance to multiple antimycobacterial agents	N	18	423
V09.80	Infection with microorganisms resistant to other specified drugs, without mention of resistance to multiple drugs	N	18	423
V09.81	Infection with microorganisms resistant to other specified drugs, with resistance to multiple drugs	N	18	423
V09.90	Infection with drug-resistant microorganisms, unspecified, without mention of multiple drug resistance	N	18	423
V09.91	Infection with drug-resistant microorganisms, unspecified, with multiple drug resistance	N	18	423
V72.81	Pre-operative cardiovascular examination	N	23	467
V72.82	Pre-operative respiratory examination	N	23	467
V72.83	Other specified pre-operative examination	N	23	467
V72.84	Pre-operative examination, unspecified	N	23	467
V72.85	Other specified examination	N	23	467
V73.88	Special screening examination, Other specified chlamydial diseases	N	23	467
V73.89	Special screening examination, Other specified viral diseases	N	23	467
V73.98	Special screening examination, Unspecified chlamydial disease	N	23	467
V73.99	Special screening examination, Unspecified viral disease	N	23	467

[1] Diagnosis code is classified as a "major problem" in these DRGs.
[2] Diagnosis code is assigned to the "significant head trauma" body site category.

TABLE 6B.—NEW PROCEDURE CODES

Procedure code	Description	OR	MDC	DRG
54.25	Peritoneal lavage	N		

TABLE 6C.—INVALID DIAGNOSIS CODES [1]

Diagnosis code	Description	CC	MDC	DRG
077.9	Unspecified diseases of conjunctiva due to viruses and Chlamydiae	N	02	46, 47, 48
078.1	Other diseases due to viruses and Chlamydiae, viral warts	N	09	283, 284
079.8	Other specified viral and Chlamydial infections	N	18	421, 422
079.9	Unspecified viral and Chlamydial infections	N	18	421, 422
			25	490
283.1	Non-autoimmune hemolytic anemias	Y	15	387, 389 [2]
			16	395, 396
			25	490
344.8	Other specified paralytic syndromes	N	01	34, 35
355.7	Other mononeuritis of lower limb	N	01	18, 19
433.0	Occlusion and stenosis of the basilar artery	Y	01	15
433.1	Occlusion and stenosis of the carotid artery	Y	01	15
433.2	Occlusion and stenosis of the vertebral artery	Y	01	15
433.3	Occlusion and stenosis of multiple and bilateral precerebral arteries	Y	01	15
433.8	Occlusion and stenosis of other specified precerebral artery	N	01	15
433.9	Occlusion and stenosis of unspecified precerebral artery	N	01	15
434.0	Cerebral thrombosis	Y	01	14
			15	387, 389 [2]
434.1	Cerebral embolism	Y	01	14
			15	387, 389 [2]
434.9	Cerebral artery occlusion, unspecified	Y	01	14
			15	387, 389 [2]
530.1	Esophagitis	N	06	182, 183, 184
530.8	Other specified disorders of esophagus	N	06	182, 183, 184
665.12	Rupture of uterus during labor, delivered, with mention of postpartum complication	Y	14	370, 371, 372, 373, 374, 375
665.14	Rupture of uterus during labor, postpartum condition or complication	Y	14	376, 377
733.1	Pathologic fracture	Y	08	239
			15	387, 389 [2]
747.6	Other anomalies of peripheral vascular system	N	05	130, 131
788.2	Retention of urine	Y	11	325, 326, 327
			15	387, 389 [2]
788.4	Frequency of urination and polyuria	N	11	325, 326, 327
788.6	Other abnormality of urination	N	11	325, 326, 327
790.9	Other nonspecific findings on examination of blood	N	23	463, 464
925	Crushing injury of face, scalp and neck	Y	21	444, 445, 446
			24	487
V72.8	Other special examinations	N	23	467
V73.8	Special screening examination for other specified viral and Chlamydial diseases	N	23	467
V73.9	Special screening examination for unspecified viral disease	N	23	467

[1] See Table 6a for new diagnosis codes (4- or 5-digits) that will be considered valid by the FY 1993 GROUPER.
[2] Diagnosis code is classified as a "major problem" in these DRGs.

TABLE 6D.—REVISED DIAGNOSIS CODE TITLES

Diagnosis code	Description	CC	MDC	DRG
078.5	Cytomegaloviral disease	N	18	421, 422
078.89	Other specified diseases due to viruses	N	18	421, 422
250.00	Diabetes mellitus without mention of complication, type II [non-insulin dependent type] [NIDDM] [adult-onset type] or unspecified type, not stated as uncontrolled	N	10	294, 295
250.01	Diabetes mellitus without mention of complication, type I [insulin dependent type] [IDDM] [juvenile type], not stated as uncontrolled	Y	10	294, 295
250.10	Diabetes with ketoacidosis, type II [non-insulin dependent type] [NIDDM] [adult-onset type] or unspecified type, not stated as uncontrolled	N	10	294, 295
250.11	Diabetes with ketoacidosis, type I [insulin dependent type] [IDDM] [juvenile type], not stated as uncontrolled	Y	10	294, 295
250.20	Diabetes with hyperosmolarity, type II [non-insulin dependent type] [NIDDM] [adult-onset type] or unspecified type, not stated as uncontrolled	N	10	294, 295
250.21	Diabetes with hyperosmolarity, type I [insulin dependent type] [IDDM] [juvenile type], not stated as uncontrolled	Y	10	294, 295
250.30	Diabetes with other coma, type II [non-insulin dependent type] [NIDDM] [adult-onset type] or unspecified type, not stated as uncontrolled	N	10	294, 295
250.31	Diabetes with other coma, type I [insulin dependent type] [IDDM] [juvenile type], not stated as uncontrolled	Y	10	294, 295
250.40	Diabetes with renal manifestations, type II [non-insulin dependent type] [NIDDM] [adult-onset type] or unspecified type, not stated as uncontrolled	N	11	331, 332, 333
250.41	Diabetes with renal manifestations, type I [insulin dependent type] [IDDM] [juvenile type], not stated as uncontrolled	Y	11	331, 332, 333

TABLE 6D.—REVISED DIAGNOSIS CODE TITLES—Continued

Diagnosis code	Description	CC	MDC	DRG
250.50	Diabetes with ophthalmic manifestations, type II [non-insulin dependent type] [NIDDM] [adult-onset type] or unspecified type, not stated as uncontrolled	N	02	46, 47, 48
250.51	Diabetes with ophthalmic manifestations, type I [insulin dependent type] [IDDM] [juvenile type], not stated as uncontrolled	Y	02	46, 47, 48
250.60	Diabetes with neurological manifestations, type II [non-insulin dependent type] [NIDDM] [adult-onset type] or unspecified type, not stated as uncontrolled	N	01	18, 19
250.61	Diabetes with neurological manifestations, type I [insulin dependent type] [IDDM] [juvenile type], not stated as uncontrolled	Y	01	18, 19
250.70	Diabetes with peripheral circulatory disorders, type II [non-insulin dependent type] [NIDDM] [adult-onset type] or unspecified type, not stated as uncontrolled	N	05	130, 131
250.71	Diabetes with peripheral circulatory disorders, type I [insulin dependent type] [IDDM] [juvenile type], not stated as uncontrolled	Y	05	130, 131
250.80	Diabetes with other specified manifestations, type II [non-insulin dependent type] [NIDDM] [adult-onset type] or unspecified type, not stated as uncontrolled	N	10	294, 295
250.81	Diabetes with other specified manifestations, type I [insulin dependent type] [IDDM] [juvenile type], not stated as uncontrolled	Y	10	294, 295
250.90	Diabetes with unspecified complication, type II [non-insulin dependent type] [NIDDM] [adult-onset type] or unspecified type, not stated as uncontrolled	N	10	294, 295
250.91	Diabetes with unspecified complication, type I [insulin dependent type] [IDDM] [juvenile type], not stated as uncontrolled	Y	10	294, 295
251.1	Other specified hypoglycemia	N	10	300, 301
302.0	Ego-dystonic homosexuality	N	19	432
354.4	Causalgia of upper limb	N	01	18, 19
451.11	Phlebitis and thrombophlebitis of femoral vein (deep) (superficial)	Y	05	128
493.20	Chronic obstructive asthma, without mention of status asthmaticus	Y	04	88
493.21	Chronic obstructive asthma, with status asthmaticus	Y	04	88
788.33	Mixed incontinence, (male) (female)	N	11	325, 326, 327
790.7	Bacteremia	Y	18	416, 417
795.5	Nonspecific reaction to tuberculin skin test without active tuberculosis	N	04	79, 80, 81
995.0	Other anaphylactic shock	N	21	447, 448

TABLE 6E.—REVISED PROCEDURE CODE TITLES

Procedure code	Description	OR	MDC	DRG
33.26	Closed [percutaneous] [needle] biopsy of lung	N		
86.72	Advancement of pedicle graft	Y	01	7, 8
			03	63
			05	120
			06	170, 171
			08	217
			09	263, 264, 265, 266
			10	287
			21	439
			22	458, 472
			24	486

TABLE 6F.—ADDITIONS TO THE CC EXCLUSIONS LIST

PAGE 1 OF 16 PAGES

CCs that are added to the list are in Table 6f—Additions to the CC Exclusions List. Each of the principal diagnoses is shown with an asterisk, and the revisions to the CC Exclusions List are provided in an indented column immediately following the affected principal diagnosis.

*0700	05609	07030	07051	0720	07279	25012	25032
78003	05671	07031	07052	0721	0728	25013	25033
*0701	05679	07041	07053	0722	*1144	25020	25040
78003	0568	07042	07059	0723	1140	25021	25041
*07020	07020	07043	0706	07271	*1145	25022	25042
78003	07021	07049	0709	07272	1140	25023	25043
*07021	07030	07051	0720	07279	*25000	25030	25050
78003	07031	07052	0721	0728	25002	25031	25051
*07030	07041	07053	0722	*07999	25003	25032	25052
78003	07042	07059	0723	0520	25012	25033	25053
*07031	07043	0706	07271	0521	25013	25040	25060
78003	07049	0709	07272	0527	25022	25041	25061
*07041	07051	0720	07279	0528	25023	25042	25062
78003	07052	0721	0728	0529	25032	25043	25063
*07042	07053	0722	*07998	0530	25033	25050	25070
78003	07059	0723	0520	05310	25042	25051	25071
*07043	0706	07271	0521	05311	25043	25052	25072
78003	0709	07272	0527	05312	25052	25053	25073
*07049	0720	07279	0528	05313	25053	25060	25080
78003	0721	0728	0529	05319	25062	25061	25081
*07051	0722	*07989	0530	05379	25063	25062	25082
78003	0723	0520	05310	0538	25072	25063	25083
*07052	07271	0521	05311	05479	25073	25070	25090
78003	07272	0527	05312	0548	25082	25071	25091
*07053	07279	0528	05313	0550	25083	25072	25092
78003	0728	0529	05319	0551	25092	25073	25093
*07059	*07988	0530	05379	0552	25093	25080	2510
78003	0520	05310	0538	05571	78003	25081	2513
*0706	0521	05311	05479	05579	*25001	25082	2580
78003	0527	05312	0548	0558	25002	25083	2581
*0709	0528	05313	0550	05600	25003	25090	2588
78003	0529	05319	0551	05601	25012	25091	2589
*07888	0530	05379	0552	05609	25013	25092	78001
0520	05310	0538	05571	05671	25022	25093	78003
0521	05311	05479	05579	05679	25023	2510	*25010
0527	05312	0548	0558	0568	25032	2513	25002
0528	05313	0550	05600	07020	25033	2580	25003
0529	05319	0551	05601	07021	25042	2581	25012
0530	05379	0552	05609	07030	25043	2588	25013
05310	0538	05571	05671	07031	25052	2589	25022
05311	05479	05579	05679	07041	25053	78001	25023
05312	0548	0558	0568	07042	25062	78003	25032
05313	0550	05600	07020	07043	25063	*25003	25033
05319	0551	05601	07021	07049	25072	25001	25042
05379	0552	05609	07030	07051	25073	25002	25043
0538	05571	05671	07031	07052	25082	25003	25052
05479	05579	05679	07041	07053	25083	25010	25053
0548	0558	0568	07042	07059	25092	25011	25062
0550	05600	07020	07043	0706	25093	25012	25063
0551	05601	07021	07049	0709	78003	25013	25072
0552	05609	07030	07051	0720	*25002	25020	25073
05571	05671	07031	07052	0721	25001	25021	25082
05579	05679	07041	07053	0722	25002	25022	25083
0558	0568	07042	07059	0723	25003	25023	25092
05600	07020	07043	0706	07271	25010	25030	25093
05601	07021	07049	0709	07272	25011	25031	78003

PAGE 2 OF 16 PAGES

*25011	25082	2580	25012	25032	*25031	25082	2580
25002	25083	2581	25013	25033	25002	25083	2581
25003	25090	2588	25020	25040	25003	25090	2588
25012	25091	2589	25021	25041	25012	25091	2589
25013	25092	78001	25022	25042	25013	25092	78001
25022	25093	78003	25023	25043	25022	25093	78003
25023	2510	*25020	25030	25050	25023	2510	*25040
25032	2513	25002	25031	25051	25032	2513	25002
25033	2580	25003	25032	25052	25033	2580	25003
25042	2581	25012	25033	25053	25042	2581	25012
25043	2588	25013	25040	25060	25043	2588	25013
25052	2589	25022	25041	25061	25052	2589	25022
25053	78001	25023	25042	25062	25053	78001	25023
25062	78003	25032	25043	25063	25062	78003	25032
25063	*25013	25033	25050	25070	25063	*25033	25033
25072	25001	25042	25051	25071	25072	25001	25042
25073	25002	25043	25052	25072	25073	25002	25043
25082	25003	25052	25053	25073	25082	25003	25052
25083	25010	25053	25060	25080	25083	25010	25053
25092	25011	25062	25061	25081	25092	25011	25062
25093	25012	25063	25062	25082	25093	25012	25063
78003	25013	25072	25063	25083	78003	25013	25072
*25012	25020	25073	25070	25090	*25032	25020	25073
25001	25021	25082	25071	25091	25001	25021	25082
25002	25022	25083	25072	25092	25002	25022	25083
25003	25023	25092	25073	25093	25003	25023	25092
25010	25030	25093	25080	2510	25010	25030	25093
25011	25031	78003	25081	2513	25011	25031	78003
25012	25032	*25021	25082	2580	25012	25032	*25041
25013	25033	25002	25083	2581	25013	25033	25002
25020	25040	25003	25090	2588	25020	25040	25003
25021	25041	25012	25091	2589	25021	25041	25012
25022	25042	25013	25092	78001	25022	25042	25013
25023	25043	25022	25093	78003	25023	25043	25022
25030	25050	25023	2510	*25030	25030	25050	25023
25031	25051	25032	2513	25002	25031	25051	25032
25032	25052	25033	2580	25003	25032	25052	25033
25033	25053	25042	2581	25012	25033	25053	25042
25040	25060	25043	2588	25013	25040	25060	25043
25041	25061	25052	2589	25022	25041	25061	25052
25042	25062	25053	78001	25023	25042	25062	25053
25043	25063	25062	78003	25032	25043	25063	25062
25050	25070	25063	*25023	25033	25050	25070	25063
25051	25071	25072	25001	25042	25051	25071	25072
25052	25072	25073	25002	25043	25052	25072	25073
25053	25073	25082	25003	25052	25053	25073	25082
25060	25080	25083	25010	25053	25060	25080	25083
25061	25081	25092	25011	25062	25061	25081	25092
25062	25082	25093	25012	25063	25062	25082	25093
25063	25083	78003	25013	25072	25063	25083	78003
25070	25090	*25022	25020	25073	25070	25090	*25042
25071	25091	25001	25021	25082	25071	25091	25001
25072	25092	25002	25022	25083	25072	25092	25002
25073	25093	25003	25023	25092	25073	25093	25003
25080	2510	25010	25030	25093	25080	2510	25010
25081	2513	25011	25031	78003	25081	2513	25011

PAGE 3 OF 16 PAGES

25012	5849	5809	25063	37702	25003	25032	33510
25013	585	5810	25072	78001	25012	25033	33511
25020	59010	5811	25073	78003	25013	25040	33519
25021	59011	5812	25082	*25053	25022	25041	33520
25022	5902	5813	25083	25001	25023	25042	33521
25023	78001	58181	25092	25002	25032	25043	33522
25030	78003	58189	25093	25003	25033	25050	33523
25031	*25043	5819	78003	25010	25042	25051	33524
25032	25001	5834	*25052	25011	25043	25052	33529
25033	25002	5845	25001	25012	25052	25053	3358
25040	25003	5846	25002	25013	25053	25060	3359
25041	25010	5847	25003	25020	25062	25061	340
25042	25011	5848	25010	25021	25063	25062	3432
25043	25012	5849	25011	25022	25072	25063	3440
25050	25013	585	25012	25023	25073	25070	34501
25051	25020	59010	25013	25030	25082	25071	34510
25052	25021	59011	25020	25031	25083	25072	34511
25053	25022	5902	25021	25032	25092	25073	3452
25060	25023	78001	25022	25033	25093	25080	3453
25061	25030	78003	25023	25040	78003	25081	34541
25062	25031	*25050	25030	25041	*25061	25082	34551
25063	25032	25002	25031	25042	25002	25083	34561
25070	25033	25003	25032	25043	25003	25090	34571
25071	25040	25012	25033	25050	25012	25091	34581
25072	25041	25013	25040	25051	25013	25092	34591
25073	25042	25022	25041	25052	25022	25093	3481
25080	25043	25023	25042	25053	25023	2510	3491
25081	25050	25032	25043	25060	25032	2513	34981
25082	25051	25033	25050	25061	25033	2580	34982
25083	25052	25042	25051	25062	25042	2581	3580
25090	25053	25043	25052	25063	25043	2588	3581
25091	25060	25052	25053	25070	25052	2589	3590
25092	25061	25053	25060	25071	25053	3200	3591
25093	25062	25062	25061	25072	25062	3201	78001
2510	25063	25063	25062	25073	25063	3202	78003
2513	25070	25072	25063	25080	25072	3203	*25063
2580	25071	25073	25070	25081	25073	3207	25001
2581	25072	25082	25071	25082	25082	32081	25002
2588	25073	25083	25072	25083	25083	32082	25003
2589	25080	25092	25073	25090	25092	32089	25010
5800	25081	25093	25080	25091	25093	3209	25011
5804	25082	78003	25081	25092	78003	3210	25012
58081	25083	*25051	25082	25093	*25062	3211	25013
5809	25090	25002	25083	2510	25001	3213	25020
5810	25091	25003	25090	2513	25002	3214	25021
5811	25092	25012	25091	2580	25003	3218	25022
5812	25093	25013	25092	2581	25010	3220	25023
5813	2510	25022	25093	2588	25011	3221	25030
58181	2513	25023	2510	2589	25012	3222	25031
58189	2580	25032	2513	37700	25013	3229	25032
5819	2581	25033	2580	37701	25020	3240	25033
5834	2588	25042	2581	37702	25021	3241	25040
5845	2589	25043	2588	78001	25022	3249	25041
5846	5800	25052	2589	78003	25023	325	25042
5847	5804	25053	37700	*25060	25030	3314	25043
5848	58081	25062	37701	25002	25031	3350	25050

PAGE 4 OF 16 PAGES

25051	33524	43411	25050	4463	25091	78001	43311
25052	33529	43491	25051	4464	25092	78003	43321
25053	3358	4416	25052	4465	25093	*25080	43331
25060	3359	78003	25053	4466	2510	25002	43381
25061	340	*25071	25060	4467	2513	25003	43391
25062	3432	25002	25061	4510	2580	25012	43401
25063	3440	25003	25062	45111	2581	25013	43411
25070	34501	25012	25063	45119	2588	25022	43491
25071	34510	25013	25070	4512	2589	25023	4416
25072	34511	25022	25071	45181	43301	25032	78003
25073	3452	25023	25072	452	43311	25033	*25082
25080	3453	25032	25073	4530	43321	25042	25001
25081	34541	25033	25080	4531	43331	25043	25002
25082	34551	25042	25081	4532	43381	25052	25003
25083	34561	25043	25082	4533	43391	25053	25010
25090	34571	25052	25083	4538	43401	25062	25011
25091	34581	25053	25090	4539	43411	25063	25012
25092	34591	25062	25091	78001	43491	25072	25013
25093	3481	25063	25092	78003	436	25073	25020
2510	3491	25072	25093	*25073	4372	25082	25021
2513	34981	25073	2510	25001	4374	25083	25022
2580	34982	25082	2513	25002	4375	25092	25023
2581	3580	25083	2580	25003	4376	25093	25030
2588	3581	25092	2581	25010	4410	43301	25031
2589	3590	25093	2588	25011	4411	43311	25032
3200	3591	43301	2589	25012	4413	43321	25033
3201	78001	43311	43301	25013	4415	43331	25040
3202	78003	43321	43311	25020	4416	43381	25041
3203	*25070	43331	43321	25021	4440	43391	25042
3207	25002	43381	43331	25022	4441	43401	25043
32081	25003	43391	43381	25023	44421	43411	25050
32082	25012	43401	43391	25030	44422	43491	25051
32089	25013	43411	43401	25031	44481	4416	25052
3209	25022	43491	43411	25032	44489	78003	25053
3210	25023	4416	43491	25033	4449	*25081	25060
3211	25032	78003	436	25040	4460	25002	25061
3213	25033	*25072	4372	25041	44620	25003	25062
3214	25042	25001	4374	25042	44621	25012	25063
3218	25043	25002	4375	25043	44629	25013	25070
3220	25052	25003	4376	25050	4463	25022	25071
3221	25053	25010	4410	25051	4464	25023	25072
3222	25062	25011	4411	25052	4465	25032	25073
3229	25063	25012	4413	25053	4466	25033	25080
3240	25072	25013	4415	25060	4467	25042	25081
3241	25073	25020	4416	25061	4510	25043	25082
3249	25082	25021	4440	25062	45111	25052	25083
325	25083	25022	4441	25063	45119	25053	25090
3314	25092	25023	44421	25070	4512	25062	25091
3350	25093	25030	44422	25071	45181	25063	25092
33510	43301	25031	44481	25072	452	25072	25093
33511	43311	25032	44489	25073	4530	25073	2510
33519	43321	25033	4449	25080	4531	25082	2513
33520	43331	25040	4460	25081	4532	25083	2580
33521	43381	25041	44620	25082	4533	25092	2581
33522	43391	25042	44621	25083	4538	25093	2588
33523	43401	25043	44629	25090	4539	43301	2589

PAGE 5 OF 16 PAGES

3200	43391	5847	3201	43401	5848	25073	2510
3201	43401	5848	3202	43411	5849	25082	2513
3202	43411	5849	3203	43491	585	25083	2580
3203	43491	585	3207	436	59010	25092	2581
3207	436	59010	32081	4372	59011	25093	2588
32081	4372	59011	32082	4374	5902	43301	2589
32082	4374	5902	32089	4375	78001	43311	3200
32089	4375	78001	3209	4376	78003	43321	3201
3209	4376	78003	3210	4410	*25090	43331	3202
3210	4410	*25083	3211	4411	25002	43381	3203
3211	4411	25001	3213	4413	25003	43391	3207
3213	4413	25002	3214	4415	25012	43401	32081
3214	4415	25003	3218	4416	25013	43411	32082
3218	4416	25010	3220	4440	25022	43491	32089
3220	4440	25011	3221	4441	25023	4416	3209
3221	4441	25012	3222	44421	25032	78003	3210
3222	44421	25013	3229	44422	25033	*25092	3211
3229	44422	25020	3240	44481	25042	25001	3213
3240	44481	25021	3241	44489	25043	25002	3214
3241	44489	25022	3249	4449	25052	25003	3218
3249	4449	25023	325	4460	25053	25010	3220
325	4460	25030	3314	44620	25062	25011	3221
3314	44620	25031	3350	44621	25063	25012	3222
3350	44621	25032	33510	44629	25072	25013	3229
33510	44629	25033	33511	4463	25073	25020	3240
33511	4463	25040	33519	4464	25082	25021	3241
33519	4464	25041	33520	4465	25083	25022	3249
33520	4465	25042	33521	4466	25092	25023	325
33521	4466	25043	33522	4467	25093	25030	3314
33522	4467	25050	33523	4510	43301	25031	3350
33523	4510	25051	33524	45111	43311	25032	33510
33524	45111	25052	33529	45119	43321	25033	33511
33529	45119	25053	3358	4512	43331	25040	33519
3358	4512	25060	3359	45181	43381	25041	33520
3359	45181	25061	340	452	43391	25042	33521
340	452	25062	3432	4530	43401	25043	33522
3432	4530	25063	3440	4531	43411	25050	33523
3440	4531	25070	3452	4532	43491	25051	33524
3452	4532	25071	3453	4533	4416	25052	33529
3453	4533	25072	3481	4538	78003	25053	3358
3481	4538	25073	3491	4539	*25091	25060	3359
3491	4539	25080	34981	5800	25002	25061	340
34981	5800	25081	34982	5804	25003	25062	3432
34982	5804	25082	3580	58081	25012	25063	3440
3580	58081	25083	3581	5809	25013	25070	3452
3581	5809	25090	3590	5810	25022	25071	3453
3590	5810	25091	3591	5811	25023	25072	3481
3591	5811	25092	37700	5812	25032	25073	3491
37700	5812	25093	37701	5813	25033	25080	34981
37701	5813	2510	37702	58181	25042	25081	34982
37702	58181	2513	43301	58189	25043	25082	3580
43301	58189	2580	43311	5819	25052	25083	3581
43311	5819	2581	43321	5834	25053	25090	3590
43321	5834	2588	43331	5845	25062	25091	3591
43331	5845	2589	43381	5846	25063	25092	37700
43381	5846	3200	43391	5847	25072	25093	37701

PAGE 6 OF 16 PAGES

37702	58181	2513	43301	58189	25093	25033	28319
43301	58189	2580	43311	5819	78003	25042	*2811
43311	5819	2581	43321	5834	*2512	25043	28310
43321	5834	2588	43331	5845	25002	25052	28311
43331	5845	2589	43381	5846	25003	25053	28319
43381	5846	3200	43391	5847	25012	25062	*2812
43391	5847	3201	43401	5848	25013	25063	28310
43401	5848	3202	43411	5849	25022	25072	28311
43411	5849	3203	43491	585	25023	25073	28319
43491	585	3207	436	59010	25032	25082	*2813
436	59010	32081	4372	59011	25033	25083	28310
4372	59011	32082	4374	5902	25042	25092	28311
4374	5902	32089	4375	78001	25043	25093	28319
4375	78001	3209	4376	78003	25052	*2599	*2814
4376	78003	3210	4410	*2510	25053	25002	28310
4410	*25093	3211	4411	25002	25062	25003	28311
4411	25001	3213	4413	25003	25063	25012	28319
4413	25002	3214	4415	25012	25072	25013	*2818
4415	25003	3218	4416	25013	25073	25022	28310
4416	25010	3220	4440	25022	25082	25023	28311
4440	25011	3221	4441	25023	25083	25032	28319
4441	25012	3222	44421	25032	25092	25033	*2819
44421	25013	3229	44422	25033	25093	25042	28310
44422	25020	3240	44481	25042	78003	25043	28311
44481	25021	3241	44489	25043	*2513	25052	28319
44489	25022	3249	4449	25052	25002	25053	*2820
4449	25023	325	4460	25053	25003	25062	28310
4460	25030	3314	44620	25062	25012	25063	28311
44620	25031	3350	44621	25063	25013	25072	28319
44621	25032	33510	44629	25072	25022	25073	*2821
44629	25033	33511	4463	25073	25023	25082	28310
4463	25040	33519	4464	25082	25032	25083	28311
4464	25041	33520	4465	25083	25033	25092	28319
4465	25042	33521	4466	25092	25042	25093	*2822
4466	25043	33522	4467	25093	25043	*27411	28310
4467	25050	33523	4510	78003	25052	78820	28311
4510	25051	33524	45111	*2511	25053	78829	28319
45111	25052	33529	45119	25002	25062	*2800	*2823
45119	25053	3358	4512	25003	25063	28310	28310
4512	25060	3359	45181	25012	25072	28311	28311
45181	25061	340	452	25013	25073	28319	28319
452	25062	3432	4530	25022	25082	*2801	*2824
4530	25063	3440	4531	25023	25083	28310	28310
4531	25070	3452	4532	25032	25092	28311	28311
4532	25071	3453	4533	25033	25093	28319	28319
4533	25072	3481	4538	25042	78003	*2808	*2825
4538	25073	3491	4539	25043	*2515	28310	28310
4539	25080	34981	5800	25052	53082	28311	28311
5800	25081	34982	5804	25053	*2598	28319	28319
5804	25082	3580	58081	25062	25002	*2809	*28260
58081	25083	3581	5809	25063	25003	28310	28310
5809	25090	3590	5810	25072	25012	28311	28311
5810	25091	3591	5811	25073	25013	28319	28319
5811	25092	37700	5812	25082	25022	*2810	*28261
5812	25093	37701	5813	25083	25023	28310	28310
5813	2510	37702	58181	25092	25032	28311	28311

PAGE 7 OF 16 PAGES

28319	28261	*2850	33521	43311	43311	43401	43311
*28262	28262	28310	33522	43321	43321	43411	43321
28310	28263	28311	33523	43331	43331	43491	43331
28311	28269	28319	33524	43381	43381	*44024	43381
28319	2830	*2851	33529	43391	43391	44024	43391
*28263	28310	28310	3358	*43310	*43390	7854	43401
28310	28311	28311	3359	43301	43301	*4410	43411
28311	28319	28319	*33729	43311	43311	4416	43491
28319	2832	*2858	3350	43321	43321	*4411	4416
*28269	2839	28310	33510	43331	43331	4416	53082
28310	2840	28311	33511	43381	43381	*4412	*4599
28311	2848	28319	33519	43391	43391	4416	43301
28319	2849	*2859	33520	*43311	*43391	*4413	43311
*2827	2850	28310	33521	43301	43301	4416	43321
28310	2851	28311	33522	43311	43311	*4414	43331
28311	*28319	28319	33523	43321	43321	4416	43381
28319	2800	*2898	33524	43331	43331	*4415	43391
*2828	2814	28310	33529	43381	43381	4416	43401
28310	2818	28311	3358	43391	43391	*4416	43411
28311	2824	28319	3359	*43320	*43400	4410	43491
28319	28260	*2899	*34461	43301	43401	4411	4416
*2829	28261	28310	78820	43311	43411	4413	53082
28310	28262	28311	78829	43321	43491	4415	*5302
28311	28263	28319	*34481	43331	436	4416	53082
28319	28269	*33720	3432	43381	*43401	*4417	*5304
*2830	2830	3350	3440	43391	43401	4410	53084
28310	28310	33510	*34489	*43321	43411	4411	*5307
28311	28311	33511	3432	43301	43491	4413	53082
28319	28319	33519	3440	43311	436	4415	53084
*28310	2832	33520	*3488	43321	*43410	4416	*53081
2800	2839	33521	78003	43331	43401	*4419	5304
2814	2840	33522	*3489	43381	43411	4416	5307
2818	2848	33523	78003	43391	43491	*45182	53084
2824	2849	33524	*34989	*43330	436	4510	9981
28260	2850	33529	78003	43301	*43411	45111	*53082
28261	2851	3358	*3499	43311	43401	45119	4560
28262	*2832	3359	78003	43321	43411	4512	45620
28263	28310	*33721	*430	43331	43491	45181	5307
28269	28311	3350	78003	43381	436	*45183	53082
2830	28319	33510	*431	43391	*43490	4510	53100
28310	*2839	33511	78003	*43331	43401	45111	53101
28311	28310	33519	*4320	43301	43411	45119	53110
28319	28311	33520	78003	43311	43491	4512	53111
2832	28319	33521	*4321	43321	436	45181	53120
2839	*2840	33522	78003	43331	*43491	*45184	53121
2840	28310	33523	*4329	43381	43401	4510	53131
2848	28311	33524	78003	43391	43411	45111	53140
2849	28319	33529	*43300	*43380	43491	45119	53141
2850	*2848	3358	43301	43301	436	4512	53150
2851	28310	3359	43311	43311	*4350	45181	53151
*28311	28311	*33722	43321	43321	43301	*4560	53160
2800	28319	3350	43331	43331	43381	53082	53161
2814	*2849	33510	43381	43381	43391	*45620	53171
2818	28310	33511	43391	43391	*4351	53082	53191
2824	28311	33519	*43301	*43381	43321	*45989	53200
28260	28319	33520	43301	43301	*436	43301	53201

PAGE 8 OF 16 PAGES

53210	56985	53082	53082	53082	78829	78820	80661
53211	5780	*53200	*53350	*53521	*59654	78829	80662
53220	5781	53082	53082	53082	78820	*73310	80669
53221	5789	*53201	*53351	*53531	78829	73310	80670
53231	9981	53082	53082	53082	*59655	73311	80671
53240	*53083	*53210	*53360	*53541	78820	73312	80672
53241	5304	53082	53082	53082	78829	73313	80679
53250	5307	*53211	*53361	*53551	*59659	73314	8068
53251	53084	53082	53082	53082	78820	73315	8069
53260	9981	*53220	*53370	*53561	78829	73316	8080
53261	*53084	53082	53082	53082	*5968	73319	8082
53271	5304	*53221	*53371	*53783	78820	8058	8083
53291	5307	53082	53082	53082	78829	8059	80843
53300	53084	*53230	*53390	*56202	*5969	80600	80849
53301	*53089	53082	53082	53082	78820	80601	80851
53310	5304	*53231	*53391	*56203	78829	80602	80852
53311	5307	53082	53082	53082	*5996	80603	80853
53320	53084	*53240	*53400	*56212	78820	80604	80859
53321	9981	53082	53082	53082	78829	80605	8088
53331	*5309	*53241	*53401	*56213	*600	80606	8089
53340	53084	53082	53082	53082	78820	80607	82000
53341	*53100	*53250	*53410	*5693	78829	80608	82001
53350	53082	53082	53082	53082	*6010	80609	82002
53351	*53101	*53251	*53411	*56985	78820	80610	82003
53360	53082	53082	53082	53082	78829	80611	82009
53361	*53110	*53260	*53420	*5722	*6011	80612	82010
53371	53082	53082	53082	78003	78820	80613	82011
53391	*53111	*53261	*53421	*5780	78829	80614	82012
53400	53082	53082	53082	53082	*6012	80615	82013
53401	*53120	*53270	*53430	*5781	78820	80616	82019
53410	53082	53082	53082	53082	78829	80617	82020
53411	*53121	*53271	*53431	*5789	*6013	80618	82021
53420	53082	53082	53082	53082	78820	80619	82022
53421	*53130	*53290	*53440	*5933	78829	80620	82030
53431	53082	53082	53082	78820	*6014	80621	82031
53440	*53131	*53291	*53441	78829	78820	80622	82032
53441	53082	53082	53082	*5934	78829	80623	8208
53450	*53140	*53300	*53450	78820	*6018	80624	8209
53451	53082	53082	53082	78829	78820	80625	82100
53460	*53141	*53301	*53451	*5935	78829	80626	82101
53461	53082	53082	53082	78820	*6019	80627	82110
53471	*53150	*53310	*53460	78829	78820	80628	82111
53491	53082	53082	53082	*5960	78829	80629	*73311
53501	*53151	*53311	*53461	78820	*6020	80630	73310
53511	53082	53082	53082	78829	78820	80631	73311
53521	*53160	*53320	*53470	*5964	78829	80632	73312
53531	53082	53082	53082	78820	*6021	80633	73313
53541	*53161	*53321	*53471	78829	78820	80634	73314
53551	53082	53082	53082	*59651	78829	80635	73315
53561	*53170	*53330	*53490	78820	*6022	80636	73316
53783	53082	53082	53082	78829	78820	80637	73319
56202	*53171	*53331	*53491	*59652	78829	80638	8058
56203	53082	53082	53082	78820	*6028	80639	8059
56212	*53190	*53340	*53501	78829	78820	8064	80600
56213	53082	53082	53082	*59653	78829	8065	80601
5693	*53191	*53341	*53511	78820	*6029	80660	80602

PAGE 9 OF 16 PAGES

80603	80853	80619	82022	80635	73315	8069	80611
80604	80859	80620	82030	80636	73316	8080	80612
80605	8088	80621	82031	80637	73319	8082	80613
80606	8089	80622	82032	80638	8058	8083	80614
80607	82000	80623	8208	80639	8059	80843	80615
80608	82001	80624	8209	8064	80600	80849	80616
80609	82002	80625	82100	8065	80601	80851	80617
80610	82003	80626	82101	80660	80602	80852	80618
80611	82009	80627	82110	80661	80603	80853	80619
80612	82010	80628	82111	80662	80604	80859	80620
80613	82011	80629	*73313	80669	80605	8088	80621
80614	82012	80630	73310	80670	80606	8089	80622
80615	82013	80631	73311	80671	80607	82000	80623
80616	82019	80632	73312	80672	80608	82001	80624
80617	82020	80633	73313	80679	80609	82002	80625
80618	82021	80634	73314	8068	80610	82003	80626
80619	82022	80635	73315	8069	80611	82009	80627
80620	82030	80636	73316	8080	80612	82010	80628
80621	82031	80637	73319	8082	80613	82011	80629
80622	82032	80638	8058	8083	80614	82012	80630
80623	8208	80639	8059	80843	80615	82013	80631
80624	8209	8064	80600	80849	80616	82019	80632
80625	82100	8065	80601	80851	80617	82020	80633
80626	82101	80660	80602	80852	80618	82021	80634
80627	82110	80661	80603	80853	80619	82022	80635
80628	82111	80662	80604	80859	80620	82030	80636
80629	*73312	80669	80605	8088	80621	82031	80637
80630	73310	80670	80606	8089	80622	82032	80638
80631	73311	80671	80607	82000	80623	8208	80639
80632	73312	80672	80608	82001	80624	8209	8064
80633	73313	80679	80609	82002	80625	82100	8065
80634	73314	8068	80610	82003	80626	82101	80660
80635	73315	8069	80611	82009	80627	82110	80661
80636	73316	8080	80612	82010	80628	82111	80662
80637	73319	8082	80613	82011	80629	*73315	80669
80638	8058	8083	80614	82012	80630	73310	80670
80639	8059	80843	80615	82013	80631	73311	80671
8064	80600	80849	80616	82019	80632	73312	80672
8065	80601	80851	80617	82020	80633	73313	80679
80660	80602	80852	80618	82021	80634	73314	8068
80661	80603	80853	80619	82022	80635	73315	8069
80662	80604	80859	80620	82030	80636	73316	8080
80669	80605	8088	80621	82031	80637	73319	8082
80670	80606	8089	80622	82032	80638	8058	8083
80671	80607	82000	80623	8208	80639	8059	80843
80672	80608	82001	80624	8209	8064	80600	80849
80679	80609	82002	80625	82100	8065	80601	80851
8068	80610	82003	80626	82101	80660	80602	80852
8069	80611	82009	80627	82110	80661	80603	80853
8080	80612	82010	80628	82111	80662	80604	80859
8082	80613	82011	80629	*73314	80669	80605	8088
8083	80614	82012	80630	73310	80670	80606	8089
80843	80615	82013	80631	73311	80671	80607	82000
80849	80616	82019	80632	73312	80672	80608	82001
80851	80617	82020	80633	73313	80679	80609	82002
80852	80618	82021	80634	73314	8068	80610	82003

PAGE 10 OF 16 PAGES

82009	80627	82110	80661	78829	*7804	78003	78003
82010	80628	82111	80662	*75314	78003	*80009	*80043
82011	80629	*73319	80669	78820	*7809	78003	78003
82012	80630	73310	80670	78829	44024	*80010	*80044
82013	80631	73311	80671	*75315	78003	78003	78003
82019	80632	73312	80672	78820	78820	*80011	*80045
82020	80633	73313	80679	78829	78829	78003	78003
82021	80634	73314	8068	*75316	*7854	*80012	*80046
82022	80635	73315	8069	78820	44024	78003	78003
82030	80636	73316	8080	78829	*78820	*80013	*80049
82031	80637	73319	8082	*75317	78820	78003	78003
82032	80638	8058	8083	78820	78829	*80014	*80050
8208	80639	8059	80843	78829	*78821	78003	78003
8209	8064	80600	80849	*75319	78820	*80015	*80051
82100	8065	80601	80851	78820	78829	78003	78003
82101	80660	80602	80852	78829	*78829	*80016	*80052
82110	80661	80603	80853	*7532	78820	78003	78003
82111	80662	80604	80859	78820	78829	*80019	*80053
*73316	80669	80605	8088	78829	*78861	78003	78003
73310	80670	80606	8089	*7533	78820	*80020	*80054
73311	80671	80607	82000	78820	78829	78003	78003
73312	80672	80608	82001	78829	*78862	*80021	*80055
73313	80679	80609	82002	*7534	78820	78003	78003
73314	8068	80610	82003	78820	78829	*80022	*80056
73315	8069	80611	82009	78829	*78869	78003	78003
73316	8080	80612	82010	*7535	78820	*80023	*80059
73319	8082	80613	82011	78820	78829	78003	78003
8058	8083	80614	82012	78829	*7889	*80024	*80060
8059	80843	80615	82013	*7536	78820	78003	78003
80600	80849	80616	82019	78820	78829	*80025	*80061
80601	80851	80617	82020	78829	*79091	78003	78003
80602	80852	80618	82021	*7537	7907	*80026	*80062
80603	80853	80619	82022	78820	*79092	78003	78003
80604	80859	80620	82030	78829	7907	*80029	*80063
80605	8088	80621	82031	*7538	*79093	78003	780023
80606	8089	80622	82032	78820	7907	*80030	*80064
80607	82000	80623	8208	78829	*79099	78003	78003
80608	82001	80624	8209	*7539	7907	*80031	*80065
80609	82002	80625	82100	78820	*7998	78003	78003
80610	82003	80626	82101	78829	44024	*80032	*80066
80611	82009	80627	82110	*78001	78003	78003	78003
80612	82010	80628	82111	78003	78820	*80033	*80069
80613	82011	80629	*7530	*78002	78829	78003	78003
80614	82012	80630	78820	78003	*80000	*80034	*80070
80615	82013	80631	78829	*78003	78003	78003	78003
80616	82019	80632	*75310	430	*80001	*80035	*80071
80617	82020	80633	78820	431	78003	78003	78003
80618	82021	80634	78829	4320	*80002	*80036	*80072
80619	82022	80635	*75311	4321	78003	78003	78003
80620	82030	80636	78820	436	*80003	*80039	*80073
80621	82031	80637	78829	78001	78003	78003	78003
80622	82032	80638	*75312	78003	*80004	*80040	*80074
80623	8208	80639	78820	*78009	78003	78003	78003
80624	8209	8064	78829	78003	*80005	*80041	*80075
80625	82100	8065	*75313	*7802	78003	78003	78003
80626	82101	80660	78820	78003	*80006	*80042	*80076

78003	78003	78003	78003	78003	78003	78003	78003
*80079	*80113	*80149	*80183	*80319	*80353	*80389	*80423
78003	78003	78003	78003	78003	78003	78003	78003
*80080	*80114	*80150	*80184	*80320	*80354	*80390	*80424
78003	78003	78003	78003	78003	78003	78003	78003
*80081	*80115	*80151	*80185	*80321	*80355	*80391	*80425
78003	78003	78003	78003	78003	78003	78003	78003
*80082	*80116	*80152	*80186	*80322	*80356	*80392	*80426
78003	78003	78003	78003	78003	78003	78003	78003
*80083	*80119	*80153	*80189	*80323	*80359	*80393	*80429
78003	78003	78003	78003	78003	78003	78003	78003
*80084	*80120	*80154	*80190	*80324	*80360	*80394	*80430
78003	78003	78003	78003	78003	78003	78003	78003
*80085	*80121	*80155	*80191	*80325	*80361	*80395	*80431
78003	78003	78003	78003	78003	78003	78003	78003
*80086	*80122	*80156	*80192	*80326	*80362	*80396	*80432
78003	78003	78003	78003	78003	78003	78003	78003
*80089	*80123	*80159	*80193	*80329	*80363	*80399	*80433
78003	78003	78003	78003	78003	78003	78003	78003
*80090	*80124	*80160	*80194	*80330	*80364	*80400	*80434
78003	78003	78003	78003	78003	78003	78003	78003
*80091	*80125	*80161	*80195	*80331	*80365	*80401	*80435
78003	78003	78003	78003	78003	78003	78003	78003
*80092	*80126	*80162	*80196	*80332	*80366	*80402	*80436
78003	78003	78003	78003	78003	78003	78003	78003
*80093	*80129	*80163	*80199	*80333	*80369	*80403	*80439
78003	78003	78003	78003	78003	78003	78003	78003
*80094	*80130	*80164	*80300	*80334	*80370	*80404	*80440
78003	78003	78003	78003	78003	78003	78003	78003
*80095	*80131	*80165	*80301	*80335	*80371	*80405	*80441
78003	78003	78003	78003	78003	78003	78003	78003
*80096	*80132	*80166	*80302	*80336	*80372	*80406	*80442
78003	78003	78003	78003	78003	78003	78003	78003
*80099	*80133	*80169	*80303	*80339	*80373	*80409	*80443
78003	78003	78003	78003	78003	78003	78003	78003
*80100	*80134	*80170	*80304	*80340	*80374	*80410	*80444
78003	78003	78003	78003	78003	78003	78003	78003
*80101	*80135	*80171	*80305	*80341	*80375	*80411	*80445
78003	78003	78003	78003	78003	78003	78003	78003
*80102	*80136	*80172	*80306	*80342	*80376	*80412	*80446
78003	78003	78003	78003	78003	78003	78003	78003
*80103	*80139	*80173	*80309	*80343	*80379	*80413	*80449
78003	78003	78003	78003	78003	78003	78003	78003
*80104	*80140	*80174	*80310	*80344	*80380	*80414	*80450
78003	78003	78003	78003	78003	78003	78003	78003
*80105	*80141	*80175	*80311	*80345	*80381	*80415	*80451
78003	78003	78003	78003	78003	78003	78003	78003
*80106	*80142	*80176	*80312	*80346	*80382	*80416	*80452
78003	78003	78003	78003	78003	78003	78003	78003
*80109	*80143	*80179	*80313	*80349	*80383	*80419	*80453
78003	78003	78003	78003	78003	78003	78003	78003
*80110	*80144	*80180	*80314	*80350	*80384	*80420	*80454
78003	78003	78003	78003	78003	78003	78003	78003
*80111	*80145	*80181	*80315	*80351	*80385	*80421	*80455
78003	78003	78003	78003	78003	78003	78003	78003
*80112	*80146	*80182	*80316	*80352	*80386	*80422	*80456

PAGE 12 OF 16 PAGES

78003	78003	78003	78003	78003	78003	78003	78003
*80459	*80493	*85121	*85155	*85191	*85226	*85302	*85416
78003	78003	78003	78003	78003	78003	78003	78003
*80460	*80494	*85122	*85156	*85192	*85229	*85303	*85419
78003	78003	78003	78003	78003	78003	78003	78003
*80461	*80495	*85123	*85159	*85193	*85230	*85304	*8738
78003	78003	78003	78003	78003	78003	78003	9251
*80462	*80496	*85124	*85160	*85194	*85231	*85305	9252
78003	78003	78003	78003	78003	78003	78003	*8739
*80463	*8500	*85125	*85161	*85195	*85232	*85306	9251
78003	78003	78003	78003	78003	78003	78003	9252
*80464	*8501	*85126	*85162	*85196	*85233	*85309	*9050
78003	78003	78003	78003	78003	78003	78003	9251
*80465	*8502	*85129	*85163	*85199	*85234	*85310	9252
78003	78003	78003	78003	78003	78003	78003	*9251
*80466	*8503	*85130	*85164	*85200	*85235	*85311	80000
78003	78003	78003	78003	78003	78003	78003	80001
*80469	*8504	*85131	*85165	*85201	*85236	*85312	80002
78003	78003	78003	78003	78003	78003	78003	80003
*80470	*8505	*85132	*85166	*85202	*85239	*85313	80004
78003	78003	78003	78003	78003	78003	78003	80005
*80471	*8509	*85133	*85169	*85203	*85240	*85314	80006
78003	78003	78003	78003	78003	78003	78003	80009
*80472	*85100	*85134	*85170	*85204	*85241	*85315	80010
78003	78003	78003	78003	78003	78003	78003	80011
*80473	*85101	*85135	*85171	*85205	*85242	*85316	80012
78003	78003	78003	78003	78003	78003	78003	80013
*80474	*85102	*85136	*85172	*85206	*85243	*85319	80014
78003	78003	78003	78003	78003	78003	78003	80015
*80475	*85103	*85139	*85173	*85209	*85244	*85400	80016
78003	78003	78003	78003	78003	78003	78003	80019
*80476	*85104	*85140	*85174	*85210	*85245	*85401	80020
78003	78003	78003	78003	78003	78003	78003	80021
*80479	*85105	*85141	*85175	*85211	*85246	*85402	80022
78003	78003	78003	78003	78003	78003	78003	80023
*80480	*85106	*85142	*85176	*85212	*85249	*85403	80024
78003	78003	78003	78003	78003	78003	78003	80025
*80481	*85109	*85143	*85179	*85213	*85250	*85404	80026
78003	78003	78003	78003	78003	78003	78003	80029
*80482	*85110	*85144	*85180	*85214	*85251	*85405	80030
78003	78003	78003	78003	78003	78003	78003	80031
*80483	*85111	*85145	*85181	*85215	*85252	*85406	80032
78003	78003	78003	78003	78003	78003	78003	80033
*80484	*85112	*85146	*85182	*85216	*85253	*85409	80034
78003	78003	78003	78003	78003	78003	78003	80035
*80485	*85113	*85149	*85183	*85219	*85254	*85410	80036
78003	78003	78003	78003	78003	78003	78003	80039
*80486	*85114	*85150	*85184	*85221	*85255	*85411	80040
78003	78003	78003	78003	78003	78003	78003	80041
*80489	*85115	*85151	*85185	*85222	*85256	*85412	80042
78003	78003	78003	78003	78003	78003	78003	80043
*80490	*85116	*85152	*85186	*85223	*85259	*85413	80044
78003	78003	78003	78003	78003	78003	78003	80045
*80491	*85119	*85153	*85189	*85224	*85300	*85414	80046
78003	78003	78003	78003	78003	78003	78003	80049
*80492	*85120	*85154	*85190	*85225	*85301	*85415	80050

PAGE 13 OF 16 PAGES

80051	80121	80191	80326	80396	80466	85129	85199
80052	80122	80192	80329	80399	80469	85130	85200
80053	80123	80193	80330	80400	80470	85131	85201
80054	80124	80194	80331	80401	80471	85132	85202
80055	80125	80195	80332	80402	80472	85133	85203
80056	80126	80196	80333	80403	80473	85134	85204
80059	80129	80199	80334	80404	80474	85135	85205
80060	80130	8021	80335	80405	80475	85136	85206
80061	80131	80220	80336	80406	80476	85139	85209
80062	80132	80221	80339	80409	80479	85140	85210
80063	80133	80222	80340	80410	80480	85141	85211
80064	80134	80223	80341	80411	80481	85142	85212
80065	80135	80224	80342	80412	80482	85143	85213
80066	80136	80225	80343	80413	80483	85144	85214
80069	80139	80226	80344	80414	80484	85145	85215
80070	80140	80227	80345	80415	80485	85146	85216
80071	80141	80228	80346	80416	80486	85149	85219
80072	80142	80229	80349	80419	80489	85150	85220
80073	80143	80230	80350	80420	80490	85151	85221
80074	80144	80231	80351	80421	80491	85152	85222
80075	80145	80232	80352	80422	80492	85153	85223
80076	80146	80233	80353	80423	80493	85154	85224
80079	80149	80234	80354	80424	80494	85155	85225
80080	80150	80235	80355	80425	80495	85156	85226
80081	80151	80236	80356	80426	80496	85159	85229
80082	80152	80237	80359	80429	80499	85160	85230
80083	80153	80238	80360	80430	8500	85161	85231
80084	80154	80239	80361	80431	8501	85162	85232
80085	80155	8024	80362	80432	8502	85163	85233
80086	80156	8025	80363	80433	8503	85164	85234
80089	80159	8026	80364	80434	8504	85165	85235
80090	80160	8027	80365	80435	8505	85166	85236
80091	80161	8028	80366	80436	8509	85169	85239
80092	80162	8029	80369	80439	85100	85170	85240
80093	80163	80300	80370	80440	85101	85171	85241
80094	80164	80301	80371	80441	85102	85172	85242
80095	80165	80302	80372	80442	85103	85173	85243
80096	80166	80303	80373	80443	85104	85174	85244
80099	80169	80304	80374	80444	85105	85175	85245
80100	80170	80305	80375	80445	85106	85176	85246
80101	80171	80306	80376	80446	85109	85179	85249
80102	80172	80309	80379	80449	85110	85180	85250
80103	80173	80310	80380	80450	85111	85181	85251
80104	80174	80311	80381	80451	85112	85182	85252
80105	80175	80312	80382	80452	85113	85183	85253
80106	80176	80313	80383	80453	85114	85184	85254
80109	80179	80314	80384	80454	85115	85185	85255
80110	80180	80315	80385	80455	85116	85186	85256
80111	80181	80316	80386	80456	85119	85189	85259
80112	80182	80319	80389	80459	85120	85190	85300
80113	80183	80320	80390	80460	85121	85191	85301
80114	80184	80321	80391	80461	85122	85192	85302
80115	80185	80322	80392	80462	85123	85193	85303
80116	80186	80323	80393	80463	85124	85194	85304
80119	80189	80324	80394	80464	85125	85195	85305
80120	80190	80325	80395	80465	85126	85196	85306

PAGE 14 OF 16 PAGES

85309	80034	80104	80174	80311	80381	80451	85112
85310	80035	80105	80175	80312	80382	80452	85113
85311	80036	80106	80176	80313	80383	80453	85114
85312	80039	80109	80179	80314	80384	80454	85115
85313	80040	80110	80180	80315	80385	80455	85116
85314	80041	80111	80181	80316	80386	80456	85119
85315	80042	80112	80182	80319	80389	80459	85120
85316	80043	80113	80183	80320	80390	80460	85121
85319	80044	80114	80184	80321	80391	80461	85122
85400	80045	80115	80185	80322	80392	80462	85123
85401	80046	80116	80186	80323	80393	80463	85124
85402	80049	80119	80189	80324	80394	80464	85125
85403	80050	80120	80190	80325	80395	80465	85126
85404	80051	80121	80191	80326	80396	80466	85129
85405	80052	80122	80192	80329	80399	80469	85130
85406	80053	80123	80193	80330	80400	80470	85131
85409	80054	80124	80194	80331	80401	80471	85132
85410	80055	80125	80195	80332	80402	80472	85133
85411	80056	80126	80196	80333	80403	80473	85134
85412	80059	80129	80199	80334	80404	80474	85135
85413	80060	80130	8021	80335	80405	80475	85136
85414	80061	80131	80220	80336	80406	80476	85139
85415	80062	80132	80221	80339	80409	80479	85140
85416	80063	80133	80222	80340	80410	80480	85141
85419	80064	80134	80223	80341	80411	80481	85142
9251	80065	80135	80224	80342	80412	80482	85143
9252	80066	80136	80225	80343	80413	80483	85144
*9252	80069	80139	80226	80344	80414	80484	85145
80000	80070	80140	80227	80345	80415	80485	85146
80001	80071	80141	80228	80346	80416	80486	85149
80002	80072	80142	80229	80349	80419	80489	85150
80003	80073	80143	80230	80350	80420	80490	85151
80004	80074	80144	80231	80351	80421	80491	85152
80005	80075	80145	80232	80352	80422	80492	85153
80006	80076	80146	80233	80353	80423	80493	85154
80009	80079	80149	80234	80354	80424	80494	85155
80010	80080	80150	80235	80355	80425	80495	85156
80011	80081	80151	80236	80356	80426	80496	85159
80012	80082	80152	80237	80359	80429	80499	85160
80013	80083	80153	80238	80360	80430	8500	85161
80014	80084	80154	80239	80361	80431	8501	85162
80015	80085	80155	8024	80362	80432	8502	85163
80016	80086	80156	8025	80363	80433	8503	85164
80019	80089	80159	8026	80364	80434	8504	85165
80020	80090	80160	8027	80365	80435	8505	85166
80021	80091	80161	8028	80366	80436	8509	85169
80022	80092	80162	8029	80369	80439	85100	85170
80023	80093	80163	80300	80370	80440	85101	85171
80024	80094	80164	80301	80371	80441	85102	85172
80025	80095	80165	80302	80372	80442	85103	85173
80026	80096	80166	80303	80373	80443	85104	85174
80029	80099	80169	80304	80374	80444	85105	85175
80030	80100	80170	80305	80375	80445	85106	85176
80031	80101	80171	80306	80376	80446	85109	85179
80032	80102	80172	80309	80379	80449	85110	85180
80033	80103	80173	80310	80380	80450	85111	85181

PAGE 15 OF 16 PAGES

85182	85252	9251	6809	6801	03841	6828	6809
85183	85253	9252	6820	6802	03842	6829	6820
85184	85254	*V090	6821	6803	03843	*V096	6821
85185	85255	0380	6822	6804	03844	0380	6822
85186	85256	0381	6823	6805	03849	0381	6823
85189	85259	0382	6825	6806	0388	0382	6825
85190	85300	0383	6826	6807	0389	0383	6826
85191	85301	03840	6827	6808	6800	03840	6827
85192	85302	03841	6828	6809	6801	03841	6828
85193	85303	03842	6829	6820	6802	03842	6829
85194	85304	03843	*V092	6821	6803	03843	*V0971
85195	85305	03844	0380	6822	6804	03844	0380
85196	85306	03849	0381	6823	6805	03849	0381
85199	85309	0388	0382	6825	6806	0388	0382
85200	85310	0389	0383	6826	6807	0389	0383
85201	85311	6800	03840	6827	6808	6800	03840
85202	85312	6801	03841	6828	6809	6801	03841
85203	85313	6802	03842	6829	6820	6802	03842
85204	85314	6803	03843	*V094	6821	6803	03843
85205	85315	6804	03844	0380	6822	6804	03844
85206	85316	6805	03849	0381	6823	6805	03849
85209	85319	6806	0388	0382	6825	6806	0388
85210	85400	6807	0389	0383	6826	6807	0389
85211	85401	6808	6800	03840	6827	6808	6800
85212	85402	6809	6801	03841	6828	6809	6801
85213	85403	6820	6802	03842	6829	6820	6802
85214	85404	6821	6803	03843	*V0951	6821	6803
85215	85405	6822	6804	03844	0380	6822	6804
85216	85406	6823	6805	03849	0381	6823	6805
85219	85409	6825	6806	0388	0382	6825	6806
85220	85410	6826	6807	0389	0383	6826	6807
85221	85411	6827	6808	6800	03840	6827	6808
85222	85412	6828	6809	6801	03841	6828	6809
85223	85413	6829	6820	6802	03842	6829	6820
85224	85414	*V091	6821	6803	03843	*V0970	6821
85225	85415	0380	6822	6804	03844	0380	6822
85226	85416	0381	6823	6805	03849	0381	6823
85229	85419	0382	6825	6806	0388	0382	6825
85230	9251	0383	6826	6807	0389	0383	6826
85231	9252	03840	6827	6808	6800	03840	6827
85232	*9290	03841	6828	6809	6801	03841	6828
85233	9251	03842	6829	6820	6802	03842	6829
85234	9252	03843	*V093	6821	6803	03843	*V0980
85235	*9299	03844	0380	6822	6804	03844	0380
85236	9251	03849	0381	6823	6805	03849	0381
85239	9252	0388	0382	6825	6806	0388	0382
85240	*9588	0389	0383	6826	6807	0389	0383
85241	9251	6800	03840	6827	6808	6800	03840
85242	9252	6801	03841	6828	6809	6801	03841
85243	*9590	6802	03842	6829	6820	6802	03842
85244	9251	6803	03843	*V0950	6821	6803	03843
85245	9252	6804	03844	0380	6822	6804	03844
85246	*9598	6805	03849	0381	6823	6805	03849
85249	9251	6806	0388	0382	6825	6806	0388
85250	9252	6807	0389	0383	6826	6807	0389
85251	*9599	6808	6800	03840	6827	6808	6800

PAGE 16 OF 16 PAGES

6801	03841	6828
6802	03842	6829
6803	03843	
6804	03844	
6805	03849	
6806	0388	
6807	0389	
6808	6800	
6809	6801	
6820	6802	
6821	6803	
6822	6804	
6823	6805	
6825	6806	
6826	6807	
6827	6808	
6828	6809	
6829	6820	
*V0981	6821	
0380	6822	
0381	6823	
0382	6825	
0383	6826	
03840	6827	
03841	6828	
03842	6829	
03843	*V0991	
03844	0380	
03849	0381	
0388	0382	
0389	0383	
6800	03840	
6801	03841	
6802	03842	
6803	03843	
6804	03844	
6805	03849	
6806	0388	
6807	0389	
6808	6800	
6809	6801	
6820	6802	
6821	6803	
6822	6804	
6823	6805	
6825	6806	
6826	6807	
6827	6808	
6828	6809	
6829	6820	
*V0990	6821	
0380	6822	
0381	6823	
0382	6825	
0383	6826	
03840	6827	

TABLE 6G.—DELETIONS TO THE CC EXCLUSIONS LIST

PAGE 1 OF 3 PAGES

CCs that are deleted from the list are in Table 6g—Deletions to the CC Exclusions List. Each of the principal diagnoses is shown with an asterisk, and the revisions to the CC Exclusions List are provided in an indented column immediately following the affected principal diagnosis.

*0798	0530	4333	*2818	2831	4341	7882	66514
0520	05310	4340	2831	*2840	4349	*59654	*64691
0521	05311	4341	*2819	2831	436	7882	66512
0527	05312	4349	2831	*2848	*4341	*59655	66514
0528	05313	*25080	*2820	2831	4340	7882	*64693
0529	05319	4330	2831	*2849	4341	*59659	66512
0530	05379	4331	*2821	2831	4349	7882	66514
05310	0538	4332	2831	*2850	436	*5968	*64890
05311	05479	4333	*2822	2831	*4349	7882	66512
05312	0548	4340	2831	*2851	4340	*5969	66514
05313	0550	4341	*2823	2831	4341	7882	*64891
05319	0551	4349	2831	*2858	4349	*5996	66512
05379	0552	*25081	*2824	2831	436	7882	66514
0538	05571	4330	2831	*2859	*4350	*600	*64892
05479	05579	4331	*2825	2831	4330	7882	66512
0548	0558	4332	2831	*2898	*4351	*6010	66514
0550	05600	4333	*28260	2831	4332	7882	*64893
0551	05601	4340	2831	*2899	*436	*6011	66512
0552	05609	4341	*28261	2831	4340	7882	66514
05571	05671	4349	2831	*34461	4341	*6012	*64894
05579	05679	*25090	*28262	7882	4349	7882	66512
0558	0568	4330	2831	*3448	*45989	*6013	66514
05600	07020	4331	*28263	3432	4330	7882	*650
05601	07021	4332	2831	3440	4331	*6014	66512
05609	07030	4333	*28269	*4330	4332	7882	66514
05671	07031	4340	2831	4330	4333	*6018	*66500
05679	07041	4341	*2827	4331	4340	7882	66512
0568	07042	4349	2831	4332	4341	*6019	66514
07020	07043	*25091	*2828	4333	4349	7882	*66501
07021	07049	4330	2831	*4331	*4599	*6020	66512
07030	07051	4331	*2829	4330	4330	7882	66514
07031	07052	4332	2831	4331	4331	*6021	*66503
07041	07053	4333	*2830	4332	4332	7882	66512
07042	07059	4340	2831	4333	4333	*6022	66514
07043	0706	4341	*2831	*4332	4340	7882	*66510
07049	0709	4349	2800	4330	4341	*6028	66512
07051	0720	*27411	2814	4331	4349	7882	66514
07052	0721	7882	2818	4332	*5308	*6029	*66511
07053	0722	*2800	2824	4333	5304	7882	66512
07059	0723	2831	28260	*4333	5307	*64680	66514
0706	07271	*2801	28261	4330	9981	66512	*66512
0709	07272	2831	28262	4331	*5933	66514	66500
0720	07279	*2808	28263	4332	7882	*64681	66501
0721	0728	2831	28269	4333	*5934	66512	66503
0722	*25070	*2809	2830	*4338	7882	66514	66510
0723	4330	2831	2831	4330	*5935	*64682	66511
07271	4331	*2810	2832	4331	7882	66512	66512
07272	4332	2831	2839	4332	*5960	66514	66514
07279	4333	*2811	2840	4333	7882	*64683	*66514
0728	4340	2831	2848	*4339	*5964	66512	66500
*0799	4341	*2812	2849	4330	7882	66514	66501
0520	4349	2831	2850	4331	*59651	*64684	66503
0521	*25071	*2813	2851	4332	7882	66512	66510
0527	4330	2831	*2832	4333	*59652	66514	66511
0528	4331	*2814	2831	*4340	7882	*64690	66512
0529	4332	2831	*2839	4340	*59653	66512	66514

PAGE 2 OF 3 PAGES

*66550	66514	80627	82110	*925	80069	80139	80226
66512	*66982	80628	82111	80000	80070	80140	80227
66514	66512	80629	*7530	80001	80071	80141	80228
*66551	66514	80630	7882	80002	80072	80142	80229
66512	*66983	80631	*75310	80003	80073	80143	80230
66514	66512	80632	7882	80004	80074	80144	80231
*66554	66514	80633	*75311	80005	80075	80145	80232
66512	*66984	80634	7882	80006	80076	80146	80233
66514	66512	80635	*75312	80009	80079	80149	80234
*66580	66514	80636	7882	80010	80080	80150	80235
66512	*66990	80637	*75313	80011	80081	80151	80236
66514	66512	80638	7882	80012	80082	80152	80237
*66581	66514	80639	*75314	80013	80083	80153	80238
66512	*66991	8064	7882	80014	80084	80154	80239
66514	66512	8065	*75315	80015	80085	80155	8024
*66582	66514	80660	7882	80016	80086	80156	8025
66512	*66992	80661	*75316	80019	80089	80159	8026
66514	66512	80662	7882	80020	80090	80160	8027
*66583	66514	80669	*75317	80021	80091	80161	8028
66512	*66993	80670	7882	80022	80092	80162	8029
66514	66512	80671	*75319	80023	80093	80163	80300
*66584	66514	80672	7882	80024	80094	80164	80301
66512	*66994	80679	*7532	80025	80095	80165	80302
66514	66512	8068	7882	80026	80096	80166	80303
*66590	66514	8069	*7533	80029	80099	80169	80304
66512	*7331	8080	7882	80030	80100	80170	80305
66514	7331	8082	*7534	80031	80101	80171	80306
*66591	8058	8083	7882	80032	80102	80172	80309
66512	8059	80843	*7535	80033	80103	80173	80310
66514	80600	80849	7882	80034	80104	80174	80311
*66592	80601	80851	*7536	80035	80105	80175	80312
66512	80602	80852	7882	80036	80106	80176	80313
66514	80603	80853	*7537	80039	80109	80179	80314
*66593	80604	80859	7882	80040	80110	80180	80315
66512	80605	8088	*7538	80041	80111	80181	80316
66514	80606	8089	7882	80042	80112	80182	80319
*66594	80607	82000	*7539	80043	80113	80183	80320
66512	80608	82001	7882	80044	80114	80184	80321
66514	80609	82002	*7809	80045	80115	80185	80322
*66940	80610	82003	7882	80046	80116	80186	80323
66512	80611	82009	*7882	80049	80119	80189	80324
66514	80612	82010	7882	80050	80120	80190	80325
*66941	80613	82011	*7886	80051	80121	80191	80326
66512	80614	82012	7882	80052	80122	80192	80329
66514	80615	82013	*7889	80053	80123	80193	80330
*66942	80616	82019	7882	80054	80124	80194	80331
66512	80617	82020	*7909	80055	80125	80195	80332
66514	80618	82021	7907	80056	80126	80196	80333
*66944	80619	82022	*7998	80059	80129	80199	80334
66512	80620	82030	7882	80060	80130	8021	80335
66514	80621	82031	*8738	80061	80131	80220	80336
*66980	80622	82032	925	80062	80132	80221	80339
66512	80623	8208	*8739	80063	80133	80222	80340
66514	80624	8209	925	80064	80134	80223	80341
*66981	80625	82100	*9050	80065	80135	80224	80342
66512	80626	82101	925	80066	80136	80225	80343

PAGE 3 OF 3 PAGES

80344	80414	80484	85145	85215	85405
80345	80415	80485	85146	85216	85406
80346	80416	80486	85149	85219	85409
80349	80419	80489	85150	85220	85410
80350	80420	80490	85151	85221	85411
80351	80421	80491	85152	85222	85412
80352	80422	80492	85153	85223	85413
80353	80423	80493	85154	85224	85414
80354	80424	80494	85155	85225	85415
80355	80425	80495	85156	85226	85416
80356	80426	80496	85159	85229	85419
80359	80429	80499	85160	85230	925
80360	80430	8500	85161	85231	*9290
80361	80431	8501	85162	85232	925
80362	80432	8502	85163	85233	*9299
80363	80433	8503	85164	85234	925
80364	80434	8504	85165	85235	*9588
80365	80435	8505	85166	85236	925
80366	80436	8509	85169	85239	*9590
80369	80439	85100	85170	85240	925
80370	80440	85101	85171	85241	*9598
80371	80441	85102	85172	85242	925
80372	80442	85103	85173	85243	*9599
80373	80443	85104	85174	85244	925
80374	80444	85105	85175	85245	
80375	80445	85106	85176	85246	
80376	80446	85109	85179	85249	
80379	80449	85110	85180	85250	
80380	80450	85111	85181	85251	
80381	80451	85112	85182	85252	
80382	80452	85113	85183	85253	
80383	80453	85114	85184	85254	
80384	80454	85115	85185	85255	
80385	80455	85116	85186	85256	
80386	80456	85119	85189	85259	
80389	80459	85120	85190	85300	
80390	80460	85121	85191	85301	
80391	80461	85122	85192	85302	
80392	80462	85123	85193	85303	
80393	80463	85124	85194	85304	
80394	80464	85125	85195	85305	
80395	80465	85126	85196	85306	
80396	80466	85129	85199	85309	
80399	80469	85130	85200	85310	
80400	80470	85131	85201	85311	
80401	80471	85132	85202	85312	
80402	80472	85133	85203	85313	
80403	80473	85134	85204	85314	
80404	80474	85135	85205	85315	
80405	80475	85136	85206	85316	
80406	80476	85139	85209	85319	
80409	80479	85140	85210	85400	
80410	80480	85141	85211	85401	
80411	80481	85142	85212	85402	
80412	80482	85143	85213	85403	
80413	80483	85144	85214	85404	

TABLE 6H.—ADDITIONAL OR PROCEDURES THAT GROUP TO DRG 477

Code	Description
19.11	Stapedectomy with incus replacement.
19.19	Other stapedectomy.
19.9	Other repair of middle ear.
20.21	Incision of mastoid.
20.22	Incision of petrous pyramid air cells.
20.23	Incision of middle ear.
20.32	Biopsy of middle and inner ear.
20.39	Other diagnostic procedures on middle and inner ear.
21.62	Fracture of the turbinates.
21.72	Open reduction of nasal fracture.
21.82	Closure of nasal fistula.
21.83	Total nasal reconstruction.
27.21	Biopsy of bony palate.
27.22	Biopsy of uvula and soft palate.
27.31	Local excision or destruction of lesion or tissue of bony palate.
27.32	Wide excision or destruction of lesion or tissue of bony palate.
27.42	Wide excision of lesion of lip.
27.49	Other excision of mouth.
27.53	Closure of fistula of mouth.
27.54	Repair of cleft lip.
27.55	Full-thickness skin graft to lip and mouth.
27.56	Other skin graft to lip and mouth.
27.57	Attachment of pedicle or flap graft to lip and mouth.
27.59	Other plastic repair of mouth.
27.71	Incision of uvula.
27.72	Excision of uvula.
27.73	Repair of uvula.
27.79	Other operations on uvula.
27.92	Incision of mouth, unspecified structure.
27.99	Other operations on oral cavity.

TABLE 6H.—ADDITIONAL OR PROCEDURES THAT GROUP TO DRG 477 Continued

Code	Description
38.59	Ligation and stripping of varicose veins, lower limb veins.
49.51	Left lateral anal sphincterotomy.
49.52	Posterior anal sphincterotomy.
49.6	Excision of anus.
54.29	Other diagnostic procedures on abdominal region.
64.49	Other repair of penis.
64.92	Incision of penis.
64.93	Division of penile adhesions.
71.22	Incision of Bartholin's gland (cyst).
71.24	Excision or other destruction of Bartholin's gland (cyst).
71.29	Other operations on Bartholin's gland.
77.56	Repair of hammer toe.
77.57	Repair of claw toe.
77.60	Local excision of lesion or tissue of bone, unspecified site.
77.61	Local excision of lesion or tissue of bone, scapula, clavicle, and thorax (ribs and sternum).
77.62	Local excision of lesion or tissue of bone, humerus.
77.63	Local excision of lesion or tissue of bone, radius and ulna.
77.64	Local excision of lesion or tissue of bone, carpals and metacarpals.
77.65	Local excision of lesion or tissue of bone, femur.
77.67	Local excision of lesion or tissue of bone, tibia and fibula.
77.98	Total ostectomy, tarsals and metatarsals.
78.60	Removal of implanted devices from bone, unspecified site.

TABLE 6H.—ADDITIONAL OR PROCEDURES THAT GROUP TO DRG 477 Continued

Code	Description
78.61	Removal of implanted devices from bone, scapula, clavicle, and thorax (ribs and sternum).
78.63	Removal of implanted devices from bone, radius and ulna.
78.64	Removal of implanted devices from bone, carpals and metacarpals.
78.65	Removal of implanted devices from bone, femur.
78.68	Removal of implanted devices from bone, tarsals and metatarsals.
80.70	Synovectomy, unspecified site.
80.71	Synovectomy, shoulder.
80.72	Synovectomy, elbow.
80.73	Synovectomy, wrist.
80.74	Synovectomy, hand and finger.
80.75	Synovectomy, hip.
80.77	Synovectomy, ankle.
80.78	Synovectomy, foot and toe.
80.79	Synovectomy, other specified sites.
83.02	Myotomy.
83.19	Other division of soft tissue.
83.32	Excision of lesion of muscle.
83.5	Bursectomy.
83.62	Delayed suture of tendon.
83.63	Rotator cuff repair.
83.64	Other suture of tendon.
83.65	Other suture of muscle or fascia.
85.93	Revision of implant of breast.
85.94	Removal of implant of breast.
85.95	Insertion of breast tissue expander.
85.96	Removal of breast tissue expander(s).
85.99	Other operations on the breast.
86.4	Radical excision of skin lesion.
86.62	Other skin graft to hand.

TABLE 7A.—MEDICARE PROSPECTIVE PAYMENT SYSTEM SELECTED PERCENTILE LENGTHS OF STAY

[FY92 Medpar Update 06/93 Grouper V10.0]

DRG	Number discharges	Arithmetic mean LOS	10th percentile	25th percentile	50th percentile	75th percentile	90th percentile
001	30645	14.8027	4	6	11	18	30
002	6016	14.6115	4	6	10	18	29
003	1	7.0000	7	7	7	7	7
004	5593	12.2246	2	4	8	15	25
005	64718	6.3315	2	3	4	7	12
006	691	3.7916	1	1	2	3	9
007	6699	18.9427	3	6	11	21	39
008	2549	4.5100	1	1	3	6	10
009	1753	10.8374	2	4	7	12	21
010	21061	10.5331	2	4	7	13	22
011	3413	5.9051	1	2	4	8	12
012	20938	10.1033	2	4	7	11	18
013	5948	8.0728	3	4	6	10	14
014	351789	9.5466	2	4	7	11	18
015	135558	5.2814	2	3	4	6	9
016	10876	9.0780	2	4	6	10	17
017	2539	5.7625	2	3	4	7	11
018	16345	7.6857	2	3	6	9	14
019	6577	5.1011	1	2	4	7	10
020	7442	12.1074	3	5	9	15	24
021	1048	9.1584	3	4	7	12	18
022	9141	5.2865	2	3	4	6	10
023	3335	6.4351	1	2	4	7	13
024	57428	7.2836	2	3	5	8	14
025	21856	4.3315	1	2	3	5	8

TABLE 7A.—MEDICARE PROSPECTIVE PAYMENT SYSTEM SELECTED PERCENTILE LENGTHS OF STAY—Continued

[FY92 Medpar Update 06/93 Grouper V10.0]

DRG	Number discharges	Arithmetic mean LOS	10th percentile	25th percentile	50th percentile	75th percentile	90th percentile
026	42	5.9286	1	2	3	8	12
027	3000	7.5517	1	1	4	9	17
028	8986	9.0393	2	3	6	11	18
029	3446	4.9800	1	2	3	6	9
030	2	16.5000	1	1	32	32	32
031	3718	6.3553	1	2	4	7	12
032	2323	3.5510	1	1	2	4	7
034	14530	8.1948	2	3	6	10	16
035	3483	5.0164	1	2	4	6	9
036	18853	2.1110	1	1	2	2	4
037	2635	4.1199	1	1	2	5	9
038	610	2.7230	1	1	2	3	5
039	7651	1.9344	1	1	1	2	3
040	2772	3.3222	1	1	2	4	8
041	1	1.0000	1	1	1	1	1
042	17996	2.4577	1	1	2	3	5
043	174	4.3506	1	2	4	5	7
044	1929	6.4785	2	4	5	8	11
045	2628	4.3158	1	2	4	5	8
046	2890	6.2907	1	2	4	7	12
047	1574	3.8774	1	1	3	5	7
049	2877	7.1477	1	3	5	8	14
050	4607	2.5500	1	1	2	3	4
051	493	3.0507	1	1	2	3	6
052	190	3.0368	1	1	2	3	7
053	5564	3.4127	1	1	2	3	8
054	3	2.6667	1	1	1	6	6
055	3255	2.8556	1	1	1	3	6
056	986	3.0061	1	1	2	3	6
057	653	5.4518	1	2	3	6	12
058	1	1.0000	1	1	1	1	1
059	143	1.9930	1	1	1	2	3
060	1	5.0000	5	5	5	5	5
061	332	5.8012	1	1	2	6	13
063	4809	5.4858	1	2	3	6	11
064	4052	8.9477	1	3	6	11	19
065	33354	4.0082	1	2	3	5	7
066	7804	4.2203	1	2	3	5	7
067	477	4.8281	2	2	4	6	9
068	14785	5.8092	2	3	5	7	10
069	4535	4.3711	2	2	4	5	7
070	34	3.3529	1	1	2	4	9
071	155	4.6581	1	2	4	6	8
072	634	5.4858	1	2	3	6	10
073	6817	5.8646	1	2	4	7	11
075	35361	13.1441	5	7	10	16	25
076	42795	14.5684	4	7	11	18	28
077	3397	6.3924	1	2	4	9	13
078	27169	9.6781	4	7	9	12	16
079	161412	11.4045	4	6	9	14	21
080	8896	7.5988	3	4	6	9	13
081	6	13.6667	4	5	13	15	15
082	69653	9.3095	2	4	7	12	19
083	7528	7.6367	2	4	6	9	14
084	1804	4.3564	1	2	3	5	8
085	16957	8.7191	2	4	7	11	17
086	1572	5.1215	1	2	4	7	10
087	54371	7.8815	1	4	6	10	15
088	285467	7.2656	3	4	6	9	13
089	409028	8.4770	3	5	7	10	15
090	43193	5.9887	3	4	5	7	10
091	40	5.2000	1	2	4	6	10
092	9800	8.5142	3	4	7	11	16
093	1396	5.9341	2	3	5	7	11
094	9917	8.8737	3	4	7	11	17
095	1214	5.1392	2	3	4	6	9
096	104197	6.7299	3	4	6	8	12
097	28984	4.9399	2	3	4	6	8
098	22	4.6818	1	2	3	6	11
099	28511	4.5867	1	2	3	6	9

TABLE 7A.—MEDICARE PROSPECTIVE PAYMENT SYSTEM SELECTED PERCENTILE LENGTHS OF STAY—Continued

[FY92 Medpar Update 06/93 Grouper V10.0]

DRG	Number discharges	Arithmetic mean LOS	10th percentile	25th percentile	50th percentile	75th percentile	90th percentile
100	11021	2.9403	1	2	2	4	5
101	19153	6.5887	2	3	5	8	12
102	3375	4.0963	1	2	3	5	8
103	361	36.7091	11	16	22	45	84
104	20072	19.5867	9	12	17	24	34
105	18350	14.0404	7	9	11	16	24
106	85529	14.7421	8	10	13	17	24
107	59611	11.2231	7	8	9	12	17
108	7152	15.1695	6	8	12	18	27
110	55055	12.8807	3	7	10	15	24
111	5676	7.9778	3	6	8	9	12
112	156648	5.7016	2	2	4	7	11
113	39070	18.5726	5	8	13	22	37
114	8063	11.7993	3	5	9	15	23
115	9423	13.4586	5	8	11	16	24
116	72006	6.8476	2	3	5	9	13
117	3792	4.9306	1	2	3	6	10
118	8036	3.7341	1	1	2	4	8
119	2821	6.1765	1	2	3	7	15
120	36822	11.6486	1	3	7	15	26
121	158061	9.2050	3	6	8	11	16
122	98585	6.4580	2	4	6	8	11
123	56565	5.2656	1	1	3	6	13
124	138747	5.7075	1	2	5	7	11
125	82874	3.1753	1	1	2	4	7
126	4448	19.4076	5	9	15	28	40
127	659531	7.5454	2	4	6	9	14
128	23706	8.1073	4	5	7	9	13
129	5794	4.1588	1	1	1	5	11
130	76089	7.8141	2	4	7	9	14
131	24891	5.8331	1	3	6	8	10
132	12277	5.3713	1	2	4	6	10
133	3637	3.6665	1	2	3	5	7
134	28392	4.7593	2	2	4	6	9
135	6557	6.3448	2	3	5	8	12
136	1317	3.9567	1	2	3	5	7
138	197096	5.6616	2	3	4	7	11
139	69620	3.5015	1	2	3	4	7
140	339000	4.3345	1	2	3	5	8
141	80174	5.5357	2	3	4	6	10
142	35300	3.8142	1	2	3	5	7
143	128790	3.2701	1	2	3	4	6
144	59263	6.8718	1	3	5	8	14
145	7659	3.9393	1	2	3	5	8
146	8199	12.9716	7	8	11	15	21
147	1660	8.7795	5	7	8	10	12
148	148850	15.5280	7	9	12	18	28
149	16768	8.7417	5	7	8	10	13
150	22820	13.4127	5	8	11	16	23
151	4638	7.1175	2	4	6	9	13
152	4870	10.3390	5	6	9	12	17
153	1983	6.9067	4	5	7	8	10
154	37533	17.7817	6	9	14	21	33
155	3853	7.9792	3	5	7	9	13
156	1	59.0000	59	59	59	59	59
157	13454	6.5372	2	3	5	8	13
158	8418	2.9260	1	1	2	4	6
159	17193	6.1270	2	3	5	7	12
160	11631	3.2797	1	2	3	4	6
161	21551	4.7541	1	2	3	6	10
162	15964	2.2571	1	1	2	3	4
163	17	6.9412	1	2	4	5	7
164	5267	10.7384	5	7	9	13	18
165	1712	6.6069	3	5	6	8	10
166	3033	6.8919	3	4	6	8	12
167	2274	3.8852	2	2	3	5	6
168	1787	5.7140	1	2	3	7	12
169	1271	2.6255	1	1	2	3	5
170	13360	15.5580	3	7	11	19	31
171	1345	6.3152	1	3	5	8	12

TABLE 7A.—MEDICARE PROSPECTIVE PAYMENT SYSTEM SELECTED PERCENTILE LENGTHS OF STAY—Continued

[FY92 Medpar Update 06/93 Grouper V10.0]

DRG	Number discharges	Arithmetic mean LOS	10th percentile	25th percentile	50th percentile	75th percentile	90th percentile
172	31102	10.1226	2	4	7	13	21
173	2803	4.9907	1	2	4	6	10
174	219458	6.6744	2	3	5	8	12
175	27498	4.1475	2	2	4	5	7
176	14169	7.4333	2	4	6	9	14
177	13643	5.9770	2	3	5	7	11
178	5408	4.1910	2	2	4	5	7
179	9427	9.0188	3	4	7	11	17
180	77672	7.3171	2	4	6	9	14
181	21439	4.4063	2	2	4	6	8
182	234138	6.0378	2	3	5	7	11
183	73884	4.0106	1	2	3	5	7
184	56	4.6607	1	2	3	5	7
185	3876	5.8950	1	2	4	7	12
186	5	3.0000	1	1	2	3	7
187	1051	3.7831	1	1	2	5	8
188	51046	7.2351	2	3	5	9	14
189	8552	3.7239	1	1	3	5	8
190	82	5.5976	2	3	4	6	12
191	10768	18.9597	6	9	14	23	37
192	905	9.3370	3	5	8	11	16
193	11805	15.9205	7	9	13	19	28
194	1148	9.3336	3	6	8	12	16
195	14704	12.2164	5	7	10	14	20
196	1362	8.0742	4	5	7	9	13
197	86264	8.1245	2	4	7	10	15
198	48397	3.1960	1	1	2	4	7
199	2980	13.7520	4	6	11	18	27
200	1898	13.5537	2	5	10	17	27
201	1718	17.5809	4	7	12	22	36
202	19394	9.2655	2	4	7	11	18
203	30329	9.3810	2	4	7	12	19
204	42958	7.8597	2	4	6	9	15
205	23409	9.0845	2	4	7	11	18
206	2064	5.2306	1	2	4	6	10
207	38588	6.8225	2	3	5	8	13
208	12703	3.7462	1	2	3	5	7
209	296052	9.7374	5	7	8	11	15
210	126848	12.0937	5	7	10	14	20
211	26650	8.6760	4	6	8	10	13
212	12	6.0000	2	3	3	5	8
213	6013	12.6280	3	5	9	15	25
214	48485	9.3414	3	5	7	11	17
215	39365	5.3790	2	3	4	7	9
216	7003	13.9025	3	6	10	18	28
217	17471	20.5655	4	7	14	26	44
218	20408	8.4959	3	4	6	10	15
219	17889	4.8434	2	3	4	6	8
220	1	5.0000	5	5	5	5	5
221	5123	10.2889	2	4	7	12	21
222	4816	5.0675	1	2	4	6	10
223	17830	3.6633	1	2	3	4	7
224	8600	2.8476	1	2	2	3	5
225	9116	5.2473	1	2	3	6	12
226	6053	8.3210	2	3	5	10	18
227	6072	3.5049	1	2	2	4	7
228	4193	3.8452	1	1	2	4	8
229	2218	2.3778	1	1	2	3	5
230	3110	6.3756	1	2	4	7	13
231	10892	6.1243	1	2	3	7	14
232	891	5.6285	1	2	3	6	14
233	5344	11.2852	3	5	8	14	22
234	2852	5.1623	1	2	4	7	10
235	6128	10.3659	2	4	6	11	22
236	39120	8.2903	2	4	6	10	16
237	1644	5.5109	1	2	4	7	11
238	6599	13.0441	4	6	9	16	27
239	62653	9.7262	3	4	7	12	19
240	11451	9.0190	2	4	7	11	18
241	3651	5.3339	1	3	4	7	10

TABLE 7A.—MEDICARE PROSPECTIVE PAYMENT SYSTEM SELECTED PERCENTILE LENGTHS OF STAY—Continued

[FY92 Medpar Update 06/93 Grouper V10.0]

DRG	Number discharges	Arithmetic mean LOS	10th percentile	25th percentile	50th percentile	75th percentile	90th percentile
242	2341	10.1909	3	5	7	13	20
243	98133	6.7623	2	3	5	8	13
244	11711	7.2756	2	3	5	8	14
245	5217	4.9166	1	2	4	6	9
246	1595	5.8533	2	3	4	7	11
247	10143	4.8250	1	2	3	6	9
248	6686	6.3422	2	3	4	7	12
249	9403	5.7241	1	2	4	7	12
250	3504	6.7663	2	3	4	8	13
251	2718	3.7384	1	1	3	4	7
253	17557	7.9243	2	3	5	9	15
254	11098	4.5761	1	2	3	6	9
256	9618	5.0917	1	2	3	6	10
257	29264	4.7445	2	3	4	5	8
258	25105	3.3707	2	2	3	4	5
259	4405	5.0173	1	2	3	5	10
260	5547	2.5379	1	1	2	3	4
261	2822	2.6956	1	1	2	3	5
262	1088	3.6866	1	1	2	4	8
263	30497	19.3934	5	8	14	23	39
264	3827	11.0065	3	5	8	14	23
265	5119	9.3192	2	3	6	11	19
266	3850	4.3330	1	1	3	6	9
267	343	4.6589	1	1	2	5	10
268	1267	4.8327	1	1	2	5	10
269	11597	11.7831	2	4	8	15	24
270	4746	4.0790	1	1	2	5	8
271	20280	11.0986	3	5	8	13	20
272	6829	9.0349	3	4	7	11	17
273	1963	6.3729	2	3	5	8	13
274	2786	9.7168	2	3	7	12	20
275	316	3.9525	1	1	3	5	8
276	820	6.0963	1	3	5	7	11
277	75991	8.2038	3	4	7	10	14
278	24996	5.9826	2	3	5	7	10
279	4	4.2500	3	3	3	4	7
280	13453	6.3997	2	3	5	7	12
281	6871	4.1550	1	2	3	5	8
282	2	4.0000	1	1	7	7	7
283	5761	6.8424	2	3	5	8	13
284	2159	4.6711	1	2	3	6	9
285	6028	18.7019	5	8	14	22	36
286	1923	10.7696	4	5	8	12	20
287	6859	18.5727	4	7	12	21	37
288	597	10.6868	3	4	6	10	23
289	4195	5.2119	2	2	3	5	11
290	9779	3.3088	1	2	2	3	6
291	134	2.2164	1	1	2	3	4
292	5465	16.2216	3	7	12	20	32
293	422	6.9526	1	2	5	9	14
294	89488	7.0743	2	4	5	8	13
295	3432	5.7118	2	3	4	7	10
296	223961	8.0417	2	3	6	9	15
297	40204	5.0151	2	2	4	6	9
298	85	4.6588	1	2	3	6	10
299	905	6.4597	1	2	4	8	14
300	12240	8.8636	3	4	7	11	17
301	1986	5.1782	1	2	4	6	9
302	7288	15.3548	7	9	12	18	26
303	18687	12.5838	6	7	10	15	22
304	14102	12.9068	4	6	9	16	26
305	3053	5.9338	2	3	5	8	11
306	12300	8.4354	2	3	6	11	17
307	3705	4.0453	2	2	3	4	7
308	10230	8.7899	2	3	6	11	18
309	3958	3.7415	1	2	3	5	8
310	34860	5.3686	1	2	4	6	11
311	16587	2.5641	1	1	2	3	5
312	2877	5.7553	1	2	4	7	11
313	1558	2.5822	1	1	2	3	5

TABLE 7A.—MEDICARE PROSPECTIVE PAYMENT SYSTEM SELECTED PERCENTILE LENGTHS OF STAY—Continued

[FY92 Medpar Update 06/93 Grouper V10.0]

DRG	Number discharges	Arithmetic mean LOS	10th percentile	25th percentile	50th percentile	75th percentile	90th percentile
314	1	14.0000	14	14	14	14	14
315	29339	11.8597	1	3	7	14	26
316	54129	9.0190	2	4	7	11	18
317	712	4.0014	1	2	3	4	8
318	6562	8.7667	2	3	6	11	18
319	715	3.4559	1	1	2	4	7
320	169351	8.1285	3	4	6	9	14
321	26294	5.5118	2	3	5	7	9
322	72	4.5000	2	2	4	6	8
323	20318	4.2033	1	2	3	5	8
324	11880	2.4516	1	1	2	3	5
325	9358	5.8166	2	3	4	7	11
326	3167	3.5185	1	2	3	4	6
327	5	3.0000	1	1	3	4	5
328	1111	5.0405	1	2	4	6	10
329	233	2.4635	1	1	2	3	5
331	32156	7.3443	2	3	5	9	15
332	5181	4.2000	1	2	3	5	9
333	330	7.2152	1	3	5	10	14
334	32963	8.2811	5	6	7	9	12
335	15419	6.6237	4	5	6	8	9
336	97162	5.3928	2	3	4	6	9
337	76828	3.5894	2	3	3	4	5
338	12513	5.9170	1	2	4	7	13
339	3998	4.8034	1	2	3	5	10
340	2	1.5000	1	1	2	2	2
341	11158	4.1761	1	2	3	5	7
342	356	3.9607	1	1	2	5	9
344	7165	4.5001	1	2	3	5	8
345	2181	4.9211	1	2	3	5	10
346	7270	7.8989	2	3	6	10	16
347	842	4.1865	1	1	2	5	8
348	3958	5.5634	1	2	4	7	11
349	1290	3.3372	1	1	2	4	6
350	7892	5.7272	2	3	5	7	10
352	719	4.4924	1	2	3	5	9
353	2476	11.0973	4	6	8	13	21
354	9959	7.9497	4	5	6	9	14
355	5914	4.7345	3	4	4	5	7
356	34105	4.0375	2	3	4	5	6
357	7168	11.7307	4	6	9	14	22
358	26877	6.1405	3	4	5	7	10
359	28006	4.1303	3	3	4	5	6
360	9753	4.9183	2	3	4	5	8
361	495	5.3495	1	2	3	6	12
362	3	1.0000	1	1	1	1	1
363	5675	4.1572	1	2	3	4	8
364	2397	3.8302	1	1	2	5	8
365	2982	9.7985	2	4	6	12	21
366	4852	9.4431	2	3	6	12	21
367	744	3.6183	1	1	2	4	7
368	1542	7.6031	2	4	6	9	14
369	2503	4.5282	1	2	3	5	9
370	840	6.4512	3	4	4	6	10
371	817	4.2130	3	3	4	4	5
372	560	4.6625	1	2	3	4	8
373	2833	2.4073	1	2	2	3	3
374	135	3.3185	1	2	2	3	5
375	8	4.8750	2	2	2	3	6
376	141	3.5319	1	2	2	4	7
377	36	4.4167	1	2	2	6	8
378	168	3.5595	1	2	3	4	5
379	322	3.6056	1	1	2	4	7
380	74	2.0811	1	1	1	2	4
381	219	2.0776	1	1	1	2	4
382	70	1.3286	1	1	1	1	2
383	1032	4.3566	1	2	3	5	9
384	131	3.3130	1	1	2	3	7
385	1	2.0000	2	2	2	2	2
387	2	37.5000	25	25	50	50	50

TABLE 7A.—MEDICARE PROSPECTIVE PAYMENT SYSTEM SELECTED PERCENTILE LENGTHS OF STAY—Continued

[FY92 Medpar Update 06/93 Grouper V10.0]

DRG	Number discharges	Arithmetic mean LOS	10th percentile	25th percentile	50th percentile	75th percentile	90th percentile
389	14	10.7143	1	2	5	9	15
390	24	6.9583	1	2	4	8	13
392	2531	14.3588	5	7	10	17	28
393	2	5.5000	5	5	6	6	6
394	1965	10.2270	1	2	6	12	24
395	70903	6.3540	1	3	5	8	12
396	15	2.2667	1	1	2	2	5
397	14151	7.3964	2	3	5	9	15
398	15378	7.9237	3	4	6	10	15
399	1411	5.1715	2	3	4	7	10
400	8419	12.5542	2	4	8	16	27
401	6946	14.7702	3	6	11	19	30
402	2182	5.0513	1	2	3	7	11
403	30458	11.3015	2	4	8	14	24
404	4636	5.3807	1	2	4	7	11
406	3772	13.7291	3	6	10	17	28
407	936	5.9113	2	3	5	7	10
408	4351	8.6592	1	2	5	10	20
409	7593	8.6394	2	4	5	10	19
410	116875	3.6554	1	2	3	5	6
411	143	2.9161	1	1	2	4	5
412	122	3.1885	1	1	2	4	6
413	9257	10.6720	2	4	8	14	22
414	1385	6.0375	1	2	4	8	13
415	32706	19.9277	5	9	15	24	40
416	153866	10.0606	2	5	8	12	19
417	41	5.5854	2	3	5	7	10
418	15619	8.0603	3	4	6	10	15
419	17469	7.2810	2	4	5	8	13
420	3339	5.1848	2	3	4	6	9
421	13954	5.4872	2	3	4	7	10
422	113	4.8142	2	2	3	6	8
423	8608	10.8040	3	5	7	13	22
424	2716	23.4013	3	8	15	26	45
425	18917	6.3405	2	3	4	7	12
426	5729	7.2702	2	3	5	9	15
427	2086	7.3672	1	3	5	9	15
428	1140	9.7596	1	3	6	11	20
429	32931	11.9431	3	4	7	13	22
430	58500	12.1914	2	5	9	15	24
431	260	8.7077	2	3	6	10	15
432	516	7.3624	1	2	4	8	15
433	6584	4.2101	1	1	3	5	10
434	19278	7.1922	2	3	5	8	14
435	13134	5.8267	1	3	4	7	11
436	2515	17.6175	6	11	17	25	28
437	11702	15.1542	5	9	14	21	28
439	1006	10.8400	1	3	7	13	22
440	4434	12.1601	2	4	8	15	26
441	754	3.7599	1	1	2	4	7
442	12999	9.5555	1	3	6	11	20
443	5215	3.4512	1	1	2	4	7
444	3572	6.8340	2	3	5	8	13
445	1706	4.2374	1	2	3	5	8
447	3308	3.3909	1	1	2	4	7
448	2	3.0000	1	1	5	5	5
449	29530	5.6665	1	2	4	7	11
450	7107	3.0125	1	1	2	4	6
451	10	6.0000	1	2	6	7	8
452	19059	5.9426	1	2	4	7	12
453	5183	3.6122	1	2	3	4	7
454	3620	6.8771	1	2	4	8	14
455	999	3.3323	1	1	2	4	7
456	225	10.4356	1	2	5	13	25
457	147	5.2721	1	1	1	7	11
458	1697	21.9446	5	9	17	27	43
459	523	15.4207	4	6	11	20	35
460	2370	8.7570	2	4	6	11	17
461	4869	5.2676	1	1	2	4	13
462	8719	16.8764	5	8	15	22	31

TABLE 7A.—MEDICARE PROSPECTIVE PAYMENT SYSTEM SELECTED PERCENTILE LENGTHS OF STAY—Continued

[FY92 Medpar Update 06/93 Grouper V10.0]

DRG	Number discharges	Arithmetic mean LOS	10th percentile	25th percentile	50th percentile	75th percentile	90th percentile
463	9651	6.6073	2	3	5	8	13
464	2850	4.1800	1	2	3	5	7
465	349	3.3668	1	1	2	3	7
466	3449	5.3920	1	1	2	5	10
467	3531	5.3452	1	1	2	4	9
468	67089	18.4453	4	8	14	23	36
471	8410	12.7150	6	8	10	14	21
472	176	30.9602	3	7	24	48	64
473	8653	16.9279	2	4	10	26	40
475	76670	14.2388	2	6	11	18	28
476	10205	16.8602	6	10	14	20	29
477	36896	10.2451	1	3	7	13	21
478	113118	10.0601	2	4	7	13	21
479	16307	5.1934	1	2	4	7	10
480	215	37.0372	13	16	25	42	79
481	98	39.8776	21	27	34	48	64
482	7089	17.8175	6	9	13	21	34
483	37098	55.8427	17	28	43	68	104
484	337	20.3976	2	8	16	28	43
485	2727	16.0689	6	8	12	18	30
486	2102	16.6912	1	7	12	21	34
487	3442	11.1426	2	4	8	14	22
488	741	22.2389	6	9	17	28	44
489	7122	13.4944	3	5	9	16	28
490	2352	8.4256	2	3	5	10	17
491	7592	6.0461	2	3	5	7	10
492	1394	17.1729	3	5	9	27	37
	10699289						

TABLE 7B.—MEDICARE PROSPECTIVE PAYMENT SYSTEM SELECTED PERCENTILE LENGTHS OF STAY

[FY92 Medpar Update 06/93 Grouper V11.0]

DRG	Number discharges	Arithmetic mean LOS	10th percentile	25th percentile	50th percentile	75th percentile	90th percentile
001	30645	14.8027	4	6	11	18	30
002	6016	14.6115	4	6	10	18	29
003	1	7.0000	7	7	7	7	7
004	5593	12.2246	2	4	8	15	25
005	64718	6.3315	2	3	4	7	12
006	691	3.7916	1	1	2	3	9
007	6641	19.0101	3	6	11	21	39
008	2607	4.6594	1	1	3	6	11
009	1753	10.8374	2	4	7	12	21
010	20981	10.5477	2	4	7	13	22
011	3493	5.9230	1	2	4	8	12
012	20938	10.1033	2	4	7	11	18
013	5948	8.0728	3	4	6	10	14
014	351789	9.5466	2	4	7	11	18
015	135558	5.2814	2	3	4	6	9
016	10565	9.1921	2	4	6	11	17
017	2850	5.7011	2	3	4	7	10
018	16170	7.6985	2	3	6	9	14
019	6752	5.1374	1	2	4	7	10
020	7442	12.1074	3	5	9	15	24
021	1048	9.1584	3	4	7	12	18
022	9141	5.2865	2	3	4	6	10
023	3335	6.4351	1	2	4	7	13
024	56761	7.3118	2	3	5	8	14
025	22523	4.3476	1	2	3	5	8
026	42	5.9286	1	2	3	8	12
027	3000	7.5517	1	1	4	9	17
028	8922	9.0641	2	3	6	11	18
029	3510	4.9909	1	2	3	6	9
030	2	16.5000	1	1	32	32	32
031	3686	6.3728	1	2	4	7	12
032	2355	3.5618	1	1	2	4	7
034	14397	8.2206	2	3	6	10	16

TABLE 7B.—MEDICARE PROSPECTIVE PAYMENT SYSTEM SELECTED PERCENTILE LENGTHS OF STAY—Continued

[FY92 Medpar Update 06/93 Grouper V11.0]

DRG	Number discharges	Arithmetic mean LOS	10th percentile	25th percentile	50th percentile	75th percentile	90th percentile
035	3616	5.0304	1	2	4	6	10
036	18853	2.1110	1	1	2	2	4
037	2635	4.1199	1	1	2	5	9
038	610	2.7230	1	1	2	3	5
039	7651	1.9344	1	1	1	2	3
040	2772	3.3222	1	1	2	4	8
041	1	1.0000	1	1	1	1	1
042	17996	2.4577	1	1	2	3	5
043	174	4.3506	1	2	4	5	7
044	1929	6.4785	2	4	5	8	11
045	2628	4.3158	1	2	4	5	8
046	2847	6.3319	1	2	5	7	12
047	1617	3.8689	1	1	3	5	7
049	2286	7.8801	2	3	5	9	15
050	4607	2.5500	1	1	2	3	4
051	493	3.0507	1	1	2	3	6
052	191	3.0576	1	1	2	3	7
053	5564	3.4127	1	1	2	3	8
054	3	2.6667	1	1	1	6	6
055	3255	2.8556	1	1	1	3	6
056	986	3.0061	1	1	2	3	6
057	662	5.4834	1	2	3	6	12
059	143	1.9930	1	1	1	2	3
060	1	5.0000	5	5	5	5	5
061	337	5.7567	1	1	2	6	13
062	1	1.0000	1	1	1	1	1
063	4809	5.4858	1	2	3	6	11
064	4052	8.9477	1	3	6	11	19
065	33354	4.0082	1	2	3	5	7
066	7804	4.2203	1	2	3	5	7
067	477	4.8281	2	2	4	6	9
068	14743	5.8097	2	3	5	7	10
069	4577	4.3828	2	2	4	5	7
070	34	3.3529	1	1	2	4	9
071	155	4.6581	1	2	4	6	8
072	634	5.4858	1	2	3	6	10
073	6817	5.8646	1	2	4	7	11
075	35360	13.1443	5	7	10	16	25
076	42775	14.5713	4	7	11	18	28
077	3417	6.4044	1	2	4	9	13
078	27169	9.6781	4	7	9	12	16
079	161360	11.4055	4	6	9	14	21
080	8948	7.6015	3	4	6	9	13
081	6	13.6667	4	5	13	15	15
082	69653	9.3095	2	4	7	12	19
083	7508	7.6380	2	4	6	9	14
084	1824	4.3871	1	2	3	5	8
085	16950	8.7214	2	4	7	11	17
086	1579	5.1127	1	2	4	7	10
087	54371	7.8815	1	4	6	10	15
088	285467	7.2656	3	4	6	9	13
089	408801	8.4780	3	5	7	10	15
090	43420	5.9927	3	4	5	7	10
091	40	5.2000	1	2	4	6	10
092	9797	8.5143	3	4	7	11	16
093	1399	5.9385	2	3	5	7	11
094	9908	8.8769	3	4	7	11	17
095	1223	5.1406	2	3	4	6	9
096	104096	6.7312	3	4	6	8	12
097	29085	4.9415	2	3	4	6	8
098	22	4.6818	1	2	3	6	11
099	28418	4.5902	1	2	3	6	9
100	11114	2.9449	1	2	2	4	5
101	19125	6.5911	2	3	5	8	12
102	3403	4.1037	1	2	3	5	8
103	361	36.7091	11	16	22	45	84
104	20072	19.5867	9	12	17	24	34
105	18350	14.0404	7	9	11	16	24
106	85529	14.7421	8	10	13	17	24
107	59611	11.2231	7	8	9	12	17

TABLE 7B.—MEDICARE PROSPECTIVE PAYMENT SYSTEM SELECTED PERCENTILE LENGTHS OF STAY—Continued

[FY92 Medpar Update 06/93 Grouper V11.0]

DRG	Number discharges	Arithmetic mean LOS	10th percentile	25th percentile	50th percentile	75th percentile	90th percentile
108	7152	15.1695	6	8	12	18	27
110	54790	12.8976	3	7	10	15	24
111	5941	8.0411	3	6	8	9	12
112	156648	5.7016	2	2	4	7	11
113	39070	18.5726	5	8	13	22	37
114	8063	11.7993	3	5	9	15	23
115	9423	13.4586	5	8	11	16	24
116	72006	6.8476	2	3	5	9	13
117	3792	4.9306	1	2	3	6	10
118	8036	3.7341	1	1	2	4	8
119	2821	6.1765	1	2	3	7	15
120	36822	11.6486	1	3	7	15	26
121	158061	9.2050	3	6	8	11	16
122	98585	6.4580	2	4	6	8	11
123	56565	5.2656	1	1	3	6	13
124	138747	5.7075	1	2	5	7	11
125	82874	3.1753	1	1	2	4	7
126	4448	19.4076	5	9	15	28	40
127	659531	7.5454	2	4	6	9	14
128	23706	8.1073	4	5	7	9	13
129	5794	4.1588	1	1	1	5	11
130	75699	7.8320	2	4	7	9	14
131	25281	5.8100	1	3	6	7	10
132	12204	5.3756	1	2	4	6	10
133	3710	3.6857	1	2	3	5	7
134	28392	4.7593	2	2	4	6	9
135	6491	6.3644	2	3	5	8	12
136	1383	3.9790	1	2	3	5	7
138	195893	5.6664	2	3	4	7	11
139	70823	3.5250	1	2	3	4	7
140	339000	4.3345	1	2	3	5	8
141	78226	5.5585	2	3	4	6	10
142	37248	3.8565	1	2	3	5	7
143	128790	3.2701	1	2	3	4	6
144	59124	6.8774	1	3	5	8	14
145	7798	3.9491	1	2	3	5	8
146	8189	12.9753	7	8	11	15	21
147	1670	8.7862	5	7	8	10	12
148	148782	15.5307	7	9	12	18	28
149	16836	8.7450	5	7	8	10	13
150	22805	13.4169	5	8	11	16	24
151	4653	7.1171	2	4	6	9	13
152	4865	10.3396	5	6	9	12	17
153	1988	6.9140	4	5	7	8	10
154	37519	17.7853	6	9	14	21	33
155	3867	7.9796	3	5	7	9	13
156	1	59.0000	59	59	59	59	59
157	13428	6.5426	2	3	5	8	13
158	8444	2.9285	1	1	2	4	6
159	17167	6.1311	2	3	5	7	12
160	11657	3.2800	1	2	3	4	6
161	21495	4.7590	1	2	3	6	10
162	16020	2.2593	1	1	2	3	4
163	17	6.9412	1	2	4	5	7
164	5263	10.7410	5	7	9	13	18
165	1716	6.6084	3	5	6	8	10
166	3029	6.8957	3	4	6	8	12
167	2278	3.8854	2	2	3	5	6
168	2050	5.7117	1	2	3	7	12
169	1584	2.7134	1	1	2	3	5
170	13357	15.5596	3	7	11	19	31
171	1348	6.3197	1	3	5	8	12
172	31086	10.1248	2	4	7	13	21
173	2819	4.9954	1	2	4	6	10
174	219284	6.6758	2	3	5	8	12
175	27672	4.1522	2	2	4	5	7
176	14169	7.4333	2	4	6	9	14
177	13606	5.9799	2	3	5	7	11
178	5445	4.1958	2	2	4	5	7
179	9427	9.0188	3	4	7	11	17

TABLE 7B.—MEDICARE PROSPECTIVE PAYMENT SYSTEM SELECTED PERCENTILE LENGTHS OF STAY—Continued

[FY92 Medpar Update 06/93 Grouper V11.0]

DRG	Number discharges	Arithmetic mean LOS	10th percentile	25th percentile	50th percentile	75th percentile	90th percentile
180	77596	7.3181	2	4	6	9	14
181	21515	4.4129	2	2	4	6	8
182	233729	6.0401	2	3	5	7	11
183	74293	4.0144	1	2	3	5	7
184	56	4.6607	1	2	3	5	7
185	3876	5.8950	1	2	4	7	12
186	5	3.0000	1	1	2	3	7
187	1051	3.7831	1	1	2	5	8
188	51002	7.2377	2	3	5	9	14
189	8596	3.7266	1	1	3	5	8
190	82	5.5976	2	3	4	6	12
191	10765	18.9617	6	9	14	23	37
192	908	9.3447	3	5	8	11	16
193	11800	15.9239	7	9	13	19	28
194	1153	9.3270	3	6	8	12	16
195	14698	12.2173	5	7	10	14	20
196	1368	8.0826	4	5	7	9	13
197	39568	10.2108	4	6	8	12	18
198	13717	5.3802	2	3	5	7	9
199	2980	13.7520	4	6	11	18	27
200	1898	13.5537	2	5	10	17	27
201	1718	17.5809	4	7	12	22	36
202	19394	9.2655	2	4	7	11	18
203	30329	9.3810	2	4	7	12	19
204	42958	7.8597	2	4	6	9	15
205	23402	9.0861	2	4	7	11	18
206	2071	5.2265	1	2	4	6	10
207	38531	6.8251	2	3	5	8	13
208	12760	3.7520	1	2	3	5	7
209	296052	9.7374	5	7	8	11	15
210	126674	12.0965	5	7	10	14	20
211	26824	8.6851	4	6	8	10	13
212	12	6.0000	2	3	3	5	8
213	6013	12.6280	3	5	9	15	25
214	48347	9.3483	3	5	7	11	17
215	39503	5.3845	2	3	4	7	9
216	7003	13.9025	3	6	10	18	28
217	17470	20.5658	4	7	14	26	44
218	20366	8.4990	3	4	6	10	15
219	17931	4.8484	2	3	4	6	8
220	1	5.0000	5	5	5	5	5
221	5114	10.2976	2	4	7	12	21
222	4825	5.0680	1	2	4	6	10
223	17816	3.6639	1	2	3	4	7
224	8613	2.8474	1	2	2	3	5
225	9116	5.2473	1	2	3	6	12
226	6042	8.3247	2	3	5	10	18
227	6083	3.5099	1	2	2	4	7
228	4187	3.8428	1	1	2	4	8
229	2224	2.3862	1	1	2	3	5
230	3110	6.3756	1	2	4	7	13
231	10892	6.1243	1	2	3	7	14
232	891	5.6285	1	2	3	6	14
233	5306	11.3064	3	5	8	14	22
234	2890	5.2038	1	2	4	7	10
235	6128	10.3659	2	4	6	11	22
236	39120	8.2903	2	4	6	10	16
237	1644	5.5109	1	2	4	7	11
238	6599	13.0441	4	6	9	16	27
239	62653	9.7262	3	4	7	12	19
240	11418	9.0264	2	4	7	11	18
241	3684	5.3439	1	3	4	7	10
242	2341	10.1909	3	5	7	13	20
243	98133	6.7623	2	3	5	8	13
244	11667	7.2825	2	3	5	8	14
245	5261	4.9211	1	2	4	6	9
246	1595	5.8533	2	3	4	7	11
247	10143	4.8250	1	2	3	6	9
248	6686	6.3422	2	3	4	7	12
249	9403	5.7241	1	2	4	7	12

TABLE 7B.—MEDICARE PROSPECTIVE PAYMENT SYSTEM SELECTED PERCENTILE LENGTHS OF STAY—Continued

[FY92 Medpar Update 06/93 Grouper V11.0]

DRG	Number discharges	Arithmetic mean LOS	10th percentile	25th percentile	50th percentile	75th percentile	90th percentile
250	3490	6.7642	2	3	4	8	13
251	2732	3.7566	1	1	3	4	7
253	17490	7.9305	2	3	5	9	15
254	11165	4.5866	1	2	3	6	9
256	9618	5.0917	1	2	3	6	10
257	29199	4.7458	2	3	4	5	8
258	25145	3.3716	2	2	3	4	5
259	4390	5.0239	1	2	3	5	10
260	5560	2.5388	1	1	2	3	4
261	2738	2.6870	1	1	2	3	5
262	1087	3.6835	1	1	2	4	8
263	30484	19.3958	5	8	14	23	39
264	3840	11.0156	3	5	8	14	23
265	5111	9.3260	2	3	6	11	19
266	3858	4.3344	1	1	3	6	9
267	343	4.6589	1	1	2	5	10
268	1379	4.7150	1	1	2	5	9
269	11585	11.7873	2	4	8	15	24
270	4758	4.0883	1	1	2	5	9
271	20280	11.0986	3	5	8	13	20
272	6820	9.0339	3	4	7	11	17
273	1972	6.3884	2	3	5	8	13
274	2785	9.7199	2	3	7	12	20
275	317	3.9432	1	1	3	5	8
276	820	6.0963	1	3	5	7	11
277	75899	8.2040	3	4	7	10	14
278	25088	5.9901	2	3	5	7	10
279	4	4.2500	3	3	3	4	7
280	13401	6.4050	2	3	5	7	12
281	6923	4.1616	1	2	3	5	8
282	2	4.0000	1	1	7	7	7
283	5748	6.8500	2	3	5	8	13
284	2172	4.6639	1	2	3	6	9
285	6028	18.7019	5	8	14	22	36
286	1923	10.7696	4	5	8	12	20
287	6859	18.5727	4	7	12	21	37
288	597	10.6868	3	4	6	10	23
289	4195	5.2119	2	2	3	5	11
290	9779	3.3088	1	2	2	3	6
291	134	2.2164	1	1	2	3	4
292	5452	16.2320	3	7	12	20	32
293	435	7.0989	1	2	5	9	15
294	89488	7.0743	2	4	5	8	13
295	3432	5.7118	2	3	4	7	10
296	223410	8.0468	2	3	6	9	15
297	40755	5.0281	2	2	4	6	9
298	85	4.6588	1	2	3	6	10
299	905	6.4597	1	2	4	8	14
300	12212	8.8693	3	4	7	11	17
301	2014	5.1946	1	2	4	6	9
302	7288	15.3548	7	9	12	18	26
303	18687	12.5838	6	7	10	15	22
304	14092	12.9107	4	6	9	16	26
305	3063	5.9389	2	3	5	8	11
306	12292	8.4371	2	3	6	11	17
307	3713	4.0493	2	2	3	4	7
308	10221	8.7927	2	3	6	11	18
309	3967	3.7459	1	2	3	5	8
310	34824	5.3709	1	2	4	6	11
311	16623	2.5655	1	1	2	3	5
312	2873	5.7567	1	2	4	7	11
313	1562	2.5877	1	1	2	3	5
314	1	14.0000	14	14	14	14	14
315	29339	11.8597	1	3	7	14	26
316	54129	9.0190	2	4	7	11	18
317	712	4.0014	1	2	3	4	8
318	6555	8.7713	2	3	6	11	18
319	722	3.4654	1	1	2	4	7
320	169187	8.1298	3	4	6	9	14
321	26458	5.5199	2	3	5	7	9

TABLE 7B.—MEDICARE PROSPECTIVE PAYMENT SYSTEM SELECTED PERCENTILE LENGTHS OF STAY—Continued

[FY92 Medpar Update 06/93 Grouper V11.0]

DRG	Number discharges	Arithmetic mean LOS	10th percentile	25th percentile	50th percentile	75th percentile	90th percentile
322	72	4.5000	2	2	4	6	8
323	20295	4.2034	1	2	3	5	8
324	11903	2.4548	1	1	2	3	5
325	9344	5.8202	2	3	4	7	11
326	3181	3.5181	1	2	3	4	6
327	5	3.0000	1	1	3	4	5
328	1111	5.0405	1	2	4	6	10
329	233	2.4635	1	1	2	3	5
331	32095	7.3491	2	3	5	9	15
332	5242	4.2068	1	2	3	5	9
333	330	7.2152	1	3	5	10	14
334	32945	8.2810	5	6	7	9	12
335	15437	6.6260	4	5	6	8	9
336	96961	5.3937	2	3	4	6	9
337	77029	3.5930	2	3	3	4	5
338	12513	5.9170	1	2	4	7	13
339	3998	4.8034	1	2	3	5	10
340	2	1.5000	1	1	2	2	2
341	11158	4.1761	1	2	3	5	7
342	356	3.9607	1	1	2	5	9
344	7165	4.5001	1	2	3	5	8
345	2181	4.9211	1	2	3	5	10
346	7264	7.9010	2	3	6	10	16
347	848	4.1946	1	1	2	5	8
348	3947	5.5695	1	2	4	7	11
349	1301	3.3374	1	1	2	4	6
350	7892	5.7272	2	3	5	7	10
352	719	4.4924	1	2	3	5	9
353	2476	11.0973	4	6	8	13	21
354	9951	7.9513	4	5	6	9	14
355	5922	4.7362	3	4	4	5	7
356	34105	4.0375	2	3	4	5	6
357	7168	11.7307	4	6	9	14	22
358	26849	6.1414	3	4	5	7	10
359	28034	4.1314	3	3	4	5	6
360	9753	4.9183	2	3	4	5	8
361	495	5.3495	1	2	3	6	12
362	3	1.0000	1	1	1	1	1
363	5675	4.1572	1	2	3	4	8
364	2397	3.8302	1	1	2	5	8
365	2982	9.7985	2	4	6	12	21
366	4851	9.4442	2	3	6	12	21
367	745	3.6188	1	1	2	4	7
368	1542	7.6031	2	4	6	9	14
369	2503	4.5282	1	2	3	5	9
370	840	6.4512	3	4	4	6	10
371	817	4.2130	3	3	4	4	5
372	560	4.6625	1	2	3	4	8
373	2833	2.4073	1	2	2	3	3
374	135	3.3185	1	2	2	3	5
375	8	4.8750	2	2	2	3	6
376	141	3.5319	1	2	2	4	7
377	36	4.4167	1	2	2	6	8
378	168	3.5595	1	2	3	4	5
379	322	3.6056	1	1	2	4	7
380	74	2.0811	1	1	1	2	4
381	219	2.0776	1	1	1	2	4
382	70	1.3286	1	1	1	1	2
383	1032	4.3566	1	2	3	5	9
384	131	3.3130	1	1	2	3	7
385	1	2.0000	2	2	2	2	2
387	2	37.5000	25	25	50	50	50
389	14	10.7143	1	2	5	9	15
390	24	6.9583	1	2	4	8	13
392	2531	14.3588	5	7	10	17	28
393	2	5.5000	5	5	6	6	6
394	1965	10.2270	1	2	6	12	24
395	70903	6.3540	1	3	5	8	12
396	15	2.2667	1	1	2	2	5
397	14151	7.3964	2	3	5	9	15

TABLE 7B.—MEDICARE PROSPECTIVE PAYMENT SYSTEM SELECTED PERCENTILE LENGTHS OF STAY—Continued

[FY92 Medpar Update 06/93 Grouper V11.0]

DRG	Number discharges	Arithmetic mean LOS	10th percentile	25th percentile	50th percentile	75th percentile	90th percentile
398	15369	7.9259	3	4	6	10	15
399	1420	5.1655	2	3	4	7	10
400	8419	12.5542	2	4	8	16	27
401	6942	14.7681	3	6	11	19	30
402	2186	5.0759	1	2	3	7	11
403	30443	11.3045	2	4	8	14	24
404	4651	5.3799	1	2	4	7	11
406	3766	13.7430	4	6	10	17	28
407	942	5.9055	2	3	5	7	10
408	4351	8.6592	1	2	5	10	20
409	7593	8.6394	2	4	5	10	19
410	116875	3.6554	1	2	3	5	6
411	143	2.9161	1	1	2	4	5
412	122	3.1885	1	1	2	4	6
413	9253	10.6756	2	4	8	14	22
414	1389	6.0274	1	2	4	8	13
415	32706	19.9277	5	9	15	24	40
416	153866	10.0606	2	5	8	12	19
417	41	5.5854	2	3	5	7	10
418	15619	8.0603	3	4	6	10	15
419	17447	7.2839	2	4	5	8	13
420	3361	5.1833	2	3	4	6	9
421	13954	5.4872	2	3	4	7	10
422	113	4.8142	2	2	3	6	8
423	8608	10.8040	3	5	7	13	22
424	2716	23.4013	3	8	15	26	45
425	18917	6.3405	2	3	4	7	12
426	5729	7.2702	2	3	5	9	15
427	2086	7.3672	1	3	5	9	15
428	1140	9.7596	1	3	6	11	20
429	32931	11.9431	3	4	7	13	22
430	58500	12.1914	2	5	9	15	24
431	260	8.7077	2	3	6	10	15
432	516	7.3624	1	2	4	8	15
433	6584	4.2101	1	1	3	5	10
434	19226	7.1977	2	3	5	8	14
435	13186	5.8241	1	3	4	7	11
436	2515	17.6175	6	11	17	25	28
437	11702	15.1542	5	9	14	21	28
439	1006	10.8400	1	3	7	13	22
440	4434	12.1601	2	4	8	15	26
441	754	3.7599	1	1	2	4	7
442	12964	9.5660	1	3	6	11	20
443	5250	3.4661	1	1	2	4	7
444	3563	6.8397	2	3	5	8	13
445	1715	4.2391	1	2	3	5	8
447	3308	3.3909	1	1	2	4	7
448	2	3.0000	1	1	5	5	5
449	29486	5.6689	1	2	4	7	11
450	7151	3.0193	1	1	2	4	6
451	10	6.0000	1	2	6	7	8
452	18984	5.9572	1	2	4	7	12
453	5258	3.5926	1	2	3	4	7
454	3608	6.8861	1	2	4	8	14
455	1011	3.3422	1	1	2	4	7
456	225	10.4356	1	2	5	13	25
457	147	5.2721	1	1	1	7	11
458	1697	21.9446	5	9	17	27	43
459	523	15.4207	4	6	11	20	35
460	2370	8.7570	2	4	6	11	17
461	4869	5.2676	1	1	2	4	13
462	8719	16.8764	5	8	15	22	31
463	9589	6.6267	2	3	5	8	13
464	2912	4.1679	1	2	3	5	7
465	349	3.3668	1	1	2	3	7
466	3449	5.3920	1	1	2	5	10
467	3531	5.3452	1	1	2	4	9
468	65648	18.6393	4	8	14	23	36
471	8410	12.7150	6	8	10	14	21
472	176	30.9602	3	7	24	48	64

TABLE 7B.—MEDICARE PROSPECTIVE PAYMENT SYSTEM SELECTED PERCENTILE LENGTHS OF STAY—Continued

[FY92 Medpar Update 06/93 Grouper V11.0]

DRG	Number discharges	Arithmetic mean LOS	10th percentile	25th percentile	50th percentile	75th percentile	90th percentile
473	8653	16.9279	2	4	10	26	40
475	76670	14.2388	2	6	11	18	28
476	10235	16.8470	6	10	14	20	29
477	38307	10.2193	1	3	7	13	21
478	111961	10.0930	2	4	7	13	21
479	17464	5.3049	1	2	4	7	10
480	215	37.0372	13	16	25	42	79
481	98	39.8776	21	27	34	48	64
482	7470	18.0909	6	9	13	21	35
483	36717	56.1816	18	28	44	68	104
484	337	20.3976	2	8	16	28	43
485	2727	16.0689	6	8	12	18	30
486	2105	16.6803	1	7	12	21	34
487	3442	11.1426	2	4	8	14	22
488	737	22.1900	6	9	17	28	44
489	7126	13.5044	3	5	9	16	28
490	2352	8.4256	2	3	5	10	17
491	7592	6.0461	2	3	5	7	10
492	1394	17.1729	3	5	9	27	37
493	46526	6.3613	1	2	5	8	13
494	34850	2.3457	1	1	1	3	5
	10699289						

TABLE 8A.—STATEWIDE AVERAGE OPERATING COST-TO-CHARGE RATIOS FOR URBAN AND RURAL HOSPITALS (CASE WEIGHTED) AUGUST 1993

State	Urban	Rural
ALABAMA	0.462	0.516
ALASKA	0.570	0.839
ARIZONA	0.509	0.608
ARKANSAS	0.576	0.543
CALIFORNIA	0.485	0.531
COLORADO	0.575	0.603
CONNECTICUT	0.603	0.600
DELAWARE	0.602	0.549
DISTRICT OF COLUMBIA	0.545	.....
FLORIDA	0.474	0.465
GEORGIA	0.573	0.556
HAWAII	0.618	0.601
IDAHO	0.657	0.640
ILLINOIS	0.550	0.619
INDIANA	0.655	0.664
IOWA	0.604	0.731
KANSAS	0.555	0.691
KENTUCKY	0.571	0.571
LOUISIANA	0.521	0.568
MAINE	0.692	0.606
MASSACHUSETTS	0.685	0.749
MICHIGAN	0.557	0.661
MINNESOTA	0.611	0.696
MISSISSIPPI	0.607	0.556
MISSOURI	0.543	0.563
MONTANA	0.576	0.683
NEBRASKA	0.575	0.703
NEVADA	0.445	0.662
NEW HAMPSHIRE	0.620	0.663
NEW JERSEY	0.791	.....
NEW MEXICO	0.562	0.556
NEW YORK	0.640	0.738
NORTH CAROLINA	0.620	0.558
NORTH DAKOTA	0.660	0.693
OHIO	0.620	0.649
OKLAHOMA	0.545	0.595
OREGON	0.605	0.671

TABLE 8A.—STATEWIDE AVERAGE OPERATING COST-TO-CHARGE RATIOS FOR URBAN AND RURAL HOSPITALS (CASE WEIGHTED) AUGUST 1993 Continued

State	Urban	Rural
PENNSYLVANIA	0.500	0.583
PUERTO RICO	0.543	0.670
RHODE ISLAND	0.632	.....
SOUTH CAROLINA	0.543	0.527
SOUTH DAKOTA	0.635	0.687
TENNESSEE	0.567	0.569
TEXAS	0.534	0.629
UTAH	0.607	0.652
VERMONT	0.675	0.625
VIRGINIA	0.565	0.593
WASHINGTON	0.690	0.734
WEST VIRGINIA	0.583	0.547
WISCONSIN	0.703	0.719
WYOMING	0.634	0.794

TABLE 8B.—STATEWIDE AVERAGE CAPITAL COST-TO-CHARGE RATIOS FOR URBAN AND RURAL HOSPITALS (CASE WEIGHTED) AUGUST 1993

State	Ratio
ALABAMA	0.059
ALASKA	0.115
ARIZONA	0.066
ARKANSAS	0.065
CALIFORNIA	0.046
COLORADO	0.056
CONNECTICUT	0.038
DELAWARE	0.054
DISTRICT OF COLUMBIA	0.043
FLORIDA	0.060
GEORGIA	0.055
HAWAII	0.073

TABLE 8B.—STATEWIDE AVERAGE CAPITAL COST-TO-CHARGE RATIOS FOR URBAN AND RURAL HOSPITALS (CASE WEIGHTED) AUGUST 1993 Continued

State	Ratio
IDAHO	0.078
ILLINOIS	0.051
INDIANA	0.069
IOWA	0.064
KANSAS	0.067
KENTUCKY	0.064
LOUISIANA	0.080
MAINE	0.043
MASSACHUSETTS	0.065
MICHIGAN	0.054
MINNESOTA	0.057
MISSISSIPPI	0.059
MISSOURI	0.061
MONTANA	0.076
NEBRASKA	0.060
NEVADA	0.044
NEW HAMPSHIRE	0.069
NEW JERSEY	0.072
NEW MEXICO	0.063
NEW YORK	0.064
NORTH CAROLINA	0.051
NORTH DAKOTA	0.073
OHIO	0.063
OKLAHOMA	0.063
OREGON	0.060
PENNSYLVANIA	0.053
PUERTO RICO	0.078
RHODE ISLAND	0.033
SOUTH CAROLINA	0.069
SOUTH DAKOTA	0.074
TENNESSEE	0.064
TEXAS	0.068
UTAH	0.055
VERMONT	0.057
VIRGINIA	0.064
WASHINGTON	0.084

TABLE 8B.—STATEWIDE AVERAGE CAPITAL COST-TO-CHARGE RATIOS FOR URBAN AND RURAL HOSPITALS (CASE WEIGHTED) AUGUST 1993 Continued

State	Ratio
WEST VIRGINIA	0.065
WISCONSIN	0.053
WYOMING	0.076

TABLE 9.—1992 TRANSFER ADJUSTED CASE MIX INDEX AND TRANSFER ADJUSTMENT TO DISCHARGES FOR CAPITAL HOSPITAL-SPECIFIC RATE REDETERMINATIONS

Provider number	Cost reporting period		Transfer adjusted case mix index	Transfer adjustment to discharges
	Begin	End		
010001	10/01/91	09/30/92	1.3186	0.9981
010004	10/01/91	09/30/92	1.0081	0.9616
010005	10/01/91	09/30/92	1.1244	0.9754
010007	10/01/91	09/30/92	1.0564	0.9653
010008	10/01/91	09/30/92	1.0147	0.9914
010009	08/01/91	07/31/92	1.0963	0.9714
010010	10/01/91	09/30/92	1.1290	0.9666
010016	10/01/91	09/30/92	1.1181	0.9783
010019	10/01/91	09/30/92	1.1954	0.9873
010021	10/01/91	09/30/92	1.2100	0.9876
010029	10/01/91	09/30/92	1.5050	0.9971
010032	01/01/92	12/31/92	0.8384	0.9722
010033	10/01/91	09/30/92	1.9336	0.9971
010035	10/01/91	09/30/92	1.1946	0.9821
010040	01/01/92	12/31/92	1.3507	0.9923
010043	10/01/91	09/30/92	0.9675	0.9392
010044	10/01/91	09/30/92	1.0815	0.9719
010045	10/01/91	09/30/92	1.0385	0.9699
010047	10/01/91	09/30/92	0.8685	0.9817
010049	09/01/91	08/31/92	1.0899	0.9738
010051	10/01/91	09/30/92	0.8946	0.9283
010052	10/01/91	09/30/92	0.9706	0.9278
010059	10/01/91	09/30/92	1.0482	0.9549
010061	10/01/91	09/30/92	0.9883	0.9689
010062	10/01/91	09/30/92	0.9655	0.9757
010065	01/01/92	12/31/92	1.2663	0.9687
010069	10/01/91	09/30/92	1.1362	0.9666
010073	10/01/91	09/30/92	0.9374	0.9556
010079	10/01/91	09/30/92	1.1089	0.9793
010081	09/01/91	08/31/92	1.8473	0.9962
010083	10/01/91	09/30/92	1.0660	0.9846
010084	01/01/92	12/31/92	1.3121	0.9978
010087	10/01/91	09/30/92	1.7861	0.9956
010092	10/01/91	09/30/92	1.3926	0.9990
010094	09/01/91	08/31/92	1.2046	0.9781
010095	10/01/91	09/30/92	1.0149	0.9530
010096	10/01/91	09/30/92	0.8911	0.9675
010097	10/01/91	09/30/92	0.9295	0.9623
010099	10/01/91	09/30/92	1.0313	0.9633
010100	10/01/91	09/30/92	1.1561	0.9762
010102	10/01/91	09/30/92	0.9042	0.9442
010108	11/01/91	10/31/92	1.2514	0.9688
010109	10/01/91	09/30/92	1.0562	0.9845
010110	10/01/91	09/30/92	0.8997	0.9428
010112	10/01/91	09/30/92	1.1675	0.9732
010115	10/01/91	09/30/92	0.8750	0.9380
010117	10/01/91	09/30/92	1.0803	0.9735
010119	10/01/91	09/30/92	1.1631	0.9884
010120	10/01/91	09/30/92	0.9577	0.9501
010122	01/01/92	12/31/92	0.8710	0.9324
010123	09/01/91	08/31/92	1.2504	0.9760
010124	09/01/91	08/31/92	1.2556	0.9814
010125	10/01/91	09/30/92	1.0355	0.9766
010126	10/01/91	09/30/92	1.1396	0.9743
010127	09/01/91	08/31/92	1.5259	0.9979
010129	10/01/91	09/30/92	1.0321	0.9658
010130	10/01/91	09/30/92	1.1202	0.9530
010137	10/01/91	09/30/92	1.2125	0.9923

TABLE 9.—1992 TRANSFER ADJUSTED CASE MIX INDEX AND TRANSFER ADJUSTMENT TO DISCHARGES FOR CAPITAL HOSPITAL-SPECIFIC RATE REDETERMINATIONS—Continued

Provider number	Cost reporting period		Transfer adjusted case mix index	Transfer adjustment to discharges
	Begin	End		
010139	01/01/92	12/31/92	1.6242	0.9978
010143	10/01/91	09/30/92	1.1472	0.9702
010144	01/01/92	12/31/92	1.3127	0.9896
010146	10/01/91	09/30/92	1.0272	0.9784
010149	09/01/91	08/31/92	1.3877	0.9914
010152	10/01/91	09/30/92	1.2938	0.9771
010153	10/01/91	09/30/92	2.1383	1.0000
010155	10/01/91	09/30/92	1.0459	0.9162
020001	01/01/92	12/31/92	1.4773	0.9978
020005	10/01/91	09/30/92	0.9100	0.9278
020006	01/01/92	12/31/92	1.1334	0.9706
020012	01/01/92	12/31/92	1.2046	0.9919
020013	01/01/92	12/31/92	0.9999	0.9847
020017	09/01/91	08/31/92	1.4289	0.9911
020025	01/01/92	12/31/92	0.9055	0.9443
030001	01/01/92	12/31/92	1.3880	0.9854
030002	01/01/92	12/31/92	1.7889	0.9981
030004	10/01/91	09/30/92	0.9681	0.9788
030008	09/01/91	08/31/92	1.9526	0.9989
030012	01/01/92	12/31/92	1.2256	0.9856
030013	10/01/91	09/30/92	1.2242	0.9858
030014	01/01/92	12/31/92	1.4775	0.9977
030018	01/01/92	12/31/92	1.7522	0.9980
030023	01/01/92	12/31/92	1.2759	0.9886
030025	01/01/92	12/31/92	1.1073	0.9474
030030	09/01/91	08/31/92	1.6604	0.9983
030035	01/01/92	12/31/92	1.3106	0.9886
030036	01/01/92	12/31/92	1.2138	0.9859
030038	10/01/91	09/30/92	1.5224	0.9993
030041	01/01/92	12/31/92	0.9724	0.9673
030044	10/01/91	09/30/92	1.0533	0.9499
030046	01/01/92	12/31/92	1.0269	0.9869
030047	01/01/92	12/31/92	1.0153	0.9383
030060	01/01/92	12/31/92	1.0530	0.9880
030061	01/01/92	12/31/92	1.5369	0.9989
030062	01/01/92	12/31/92	1.3233	0.9573
030065	01/01/92	12/31/92	1.4969	0.9971
030067	10/01/91	09/30/92	1.0345	0.9664
030068	01/01/92	12/31/92	1.0341	0.9401
030069	01/01/92	12/31/92	1.3022	0.9804
030083	09/01/91	08/31/92	1.4114	0.9862
030085	09/01/91	08/31/92	1.4130	0.9853
030086	09/01/91	08/31/92	1.1895	0.9725
030087	10/01/91	09/30/92	1.6298	0.9992
030088	01/01/92	12/31/92	1.3370	0.9891
030089	01/01/92	12/31/92	1.3715	0.9879
030092	01/01/92	12/31/92	1.5045	0.9955
030093	01/01/92	12/31/92	1.3715	0.9688
030094	09/01/91	08/31/92	1.3657	0.9892
040004	01/01/92	12/31/92	1.2531	0.9952
040005	10/01/91	09/30/92	0.9984	0.9421
040007	09/01/91	08/31/92	1.5965	0.9994
040010	01/01/92	12/31/92	1.1821	0.9899
040014	09/01/91	08/31/92	1.2180	0.9924
040018	01/01/92	12/31/92	1.3093	0.9862
040020	10/01/91	09/30/92	1.4673	0.9978
040021	01/01/92	12/31/92	1.2891	0.9807
040024	10/01/91	09/30/92	1.0227	0.9386
040027	01/01/92	12/31/92	1.2972	0.9902
040028	10/01/91	09/30/92	0.9974	0.9593
040029	01/01/92	12/31/92	1.1137	0.9630
040031	01/01/92	12/31/92	0.8883	0.9568
040036	01/01/92	12/31/92	1.3501	0.9905
040041	09/01/91	08/31/92	1.1543	0.9832
040042	01/01/92	12/31/92	1.2756	0.9860
040044	01/01/92	12/31/92	0.9115	0.9388
040045	01/01/92	12/31/92	0.9795	0.9441
040047	01/01/92	12/31/92	1.0248	0.9763
040050	10/01/91	09/30/92	1.1194	0.9814
040064	01/01/92	12/31/92	0.9226	0.9517
040066	01/01/92	12/31/92	1.1550	0.9678
040067	10/01/91	09/30/92	1.0494	0.9662
040072	12/01/91	11/30/92	1.0722	0.9672

TABLE 9.—1992 TRANSFER ADJUSTED CASE MIX INDEX AND TRANSFER ADJUSTMENT TO DISCHARGES FOR CAPITAL HOSPITAL-SPECIFIC RATE REDETERMINATIONS—Continued

Provider number	Cost reporting period		Transfer adjusted case mix index	Transfer adjustment to discharges
	Begin	End		
040075	01/01/92	12/31/92	1.0723	0.9872
040078	01/01/92	12/31/92	1.2299	0.9920
040081	10/01/91	09/30/92	0.9047	0.9320
040085	01/01/92	12/31/92	1.2421	0.9643
040100	01/01/92	12/31/92	1.1283	0.9843
040105	10/01/91	09/30/92	0.9959	0.9605
040106	10/01/91	09/30/92	1.1730	0.9665
040107	10/01/91	09/30/92	1.0680	0.9528
040114	01/01/92	12/31/92	1.8025	0.9989
040118	01/01/92	12/31/92	1.1715	0.9886
040119	10/01/91	09/30/92	1.1420	0.9893
050002	10/01/91	09/30/92	1.3432	0.9872
050007	01/01/92	12/31/92	1.5795	0.9980
050008	01/01/92	12/31/92	1.4727	0.9873
050013	01/01/92	12/31/92	2.0647	0.9996
050018	01/01/92	12/31/92	1.3554	0.9919
050021	09/01/91	08/31/92	1.2850	0.9891
050022	01/01/92	12/31/92	1.4864	0.9989
050024	01/01/92	12/31/92	1.3408	0.9902
050030	12/01/91	11/30/92	1.3340	0.9856
050032	09/01/91	08/31/92	1.2408	0.9861
050053	01/01/92	12/31/92	1.3889	1.0000
050058	10/01/91	09/30/92	1.3970	0.9951
050060	09/01/91	08/31/92	1.5019	0.9986
050061	09/01/91	08/31/92	1.3318	0.9918
050070	01/01/92	12/31/92	1.2468	0.9794
050071	01/01/92	12/31/92	1.3132	0.9859
050072	01/01/92	12/31/92	1.3270	0.9864
050073	01/01/92	12/31/92	1.2518	0.9829
050074	01/01/92	12/31/92	1.0749	0.9748
050075	01/01/92	12/31/92	1.3016	0.9920
050076	01/01/92	12/31/92	1.5692	0.9621
050078	01/01/92	12/31/92	1.3641	0.9895
050080	01/01/92	12/31/92	1.3052	0.9926
050081	09/01/91	08/31/92	1.5944	0.9903
050084	01/01/92	12/31/92	1.5491	0.9985
050091	09/01/91	08/31/92	1.2599	0.9897
050096	01/01/92	12/31/92	1.1753	0.9972
050097	01/01/92	12/31/92	1.4475	0.9938
050099	12/29/91	12/27/92	1.8651	0.9982
050100	10/01/91	09/30/92	1.8616	0.9980
050101	01/01/92	12/31/92	1.4188	0.9805
050102	01/01/92	12/31/92	1.3309	0.9930
050103	01/01/92	12/31/92	1.4848	0.9980
050107	12/01/91	11/30/92	1.3334	0.9888
050108	01/01/92	12/31/92	1.4568	0.9802
050109	01/01/92	12/31/92	2.0945	0.9974
050111	01/01/92	12/31/92	1.3902	1.0000
050112	10/01/91	09/30/92	1.4686	0.9962
050117	01/01/92	12/31/92	1.3199	0.9970
050121	01/01/92	12/31/92	1.3864	0.9895
050122	01/01/92	12/31/92	1.4806	0.9993
050125	01/01/92	12/31/92	1.3393	0.9918
050126	11/01/91	10/31/92	1.4140	0.9973
050127	10/01/91	09/30/92	1.2748	0.9799
050131	01/01/92	12/31/92	1.1859	0.9942
050132	10/01/91	09/30/92	1.3676	0.9898
050135	10/01/91	09/30/92	1.3277	0.9950
050137	01/01/92	12/31/92	1.2326	0.9800
050138	01/01/92	12/31/92	1.8003	0.9930
050139	01/01/92	12/31/92	1.2516	0.9916
050140	01/01/92	12/31/92	1.3095	0.9862
050144	09/01/91	08/31/92	1.4840	0.9939
050145	01/01/92	12/31/92	1.3534	0.9843
050146	10/01/91	09/30/92	1.1683	1.0000
050149	10/01/91	09/30/92	1.3733	0.9891
050150	01/01/92	12/31/92	1.2572	0.9723
050154	10/01/91	09/30/92	1.1838	0.9756
050155	10/01/91	09/30/92	1.1282	0.9997
050169	10/01/91	09/30/92	1.5576	0.9948
050173	09/01/91	08/31/92	1.3060	0.9901
050180	12/30/91	12/28/92	1.5354	0.9989
050189	10/01/91	09/30/92	0.9991	0.9498

TABLE 9.—1992 TRANSFER ADJUSTED CASE MIX INDEX AND TRANSFER ADJUSTMENT TO DISCHARGES FOR CAPITAL HOSPITAL-SPECIFIC RATE REDETERMINATIONS—Continued

Provider number	Cost reporting period		Transfer adjusted case mix index	Transfer adjustment to discharges
	Begin	End		
050198 ...	01/01/92	12/31/92	1.3681	0.9835
050204 ...	10/01/91	09/30/92	1.4069	0.9970
050205 ...	01/01/92	12/31/92	1.3739	0.9945
050208 ...	01/01/92	12/31/92	1.2970	0.9884
050211 ...	01/01/92	12/31/92	1.3115	0.9902
050212 ...	09/01/91	08/31/92	1.0405	1.0000
050214 ...	01/01/92	12/31/92	1.6537	0.9935
050217 ...	01/01/92	12/31/92	1.2459	0.9762
050219 ...	01/01/92	12/31/92	1.3646	0.9765
050222 ...	10/01/91	09/30/92	1.5656	0.9968
050224 ...	09/15/91	09/13/92	1.6065	0.9977
050225 ...	01/01/92	12/31/92	1.4203	0.9899
050226 ...	10/01/91	09/30/92	1.4231	0.9983
050231 ...	01/01/92	12/31/92	1.5197	0.9958
050233 ...	10/01/91	09/30/92	1.2312	0.9795
050234 ...	10/01/91	09/30/92	1.2625	0.9814
050235 ...	01/01/92	12/31/92	1.4719	0.9981
050236 ...	01/01/92	12/31/92	1.4064	0.9881
050238 ...	01/01/92	12/31/92	1.4654	0.9974
050239 ...	01/01/92	12/31/92	1.4126	0.9963
050241 ...	01/01/92	12/31/92	1.2713	0.9750
050251 ...	01/01/92	12/31/92	1.1829	0.9583
050253 ...	10/01/91	09/30/92	0.9050	1.0000
050254 ...	11/01/91	10/31/92	1.1604	0.9822
050256 ...	11/01/91	10/31/92	1.7433	0.9947
050257 ...	01/01/92	12/31/92	1.0228	0.9933
050264 ...	09/01/91	08/31/92	1.4274	0.9923
050269 ...	10/01/91	09/30/92	1.1044	0.9853
050270 ...	10/01/91	09/30/92	1.3233	0.9877
050272 ...	10/01/91	09/30/92	1.3962	0.9917
050282 ...	10/01/91	09/30/92	1.3907	0.9892
050288 ...	08/01/91	07/31/92	1.1037	0.9622
050298 ...	01/01/92	12/31/92	1.2120	0.9717
050300 ...	01/01/92	12/31/92	1.3016	0.9918
050301 ...	01/01/92	12/31/92	1.3499	0.9848
050302 ...	01/01/92	12/31/92	1.3726	0.9819
050305 ...	12/29/91	12/27/92	1.5282	0.9971
050309 ...	01/01/92	12/31/92	1.3050	0.9965
050310 ...	09/01/91	08/31/92	1.1866	0.9939
050313 ...	01/01/92	12/31/92	1.1747	0.9830
050317 ...	01/01/92	12/31/92	1.3474	0.9802
050324 ...	10/01/91	09/30/92	1.8370	0.9963
050327 ...	01/01/92	12/31/92	1.5568	0.9852
050335 ...	01/01/92	12/31/92	1.2680	0.9787
050336 ...	01/01/92	12/31/92	1.3037	0.9779
050345 ...	10/01/91	09/30/92	1.2991	0.9891
050351 ...	01/01/92	12/31/92	1.4881	0.9970
050352 ...	01/01/92	12/31/92	1.2869	0.9674
050357 ...	10/01/91	09/30/92	1.9039	0.9942
050363 ...	09/01/91	08/31/92	1.3489	0.9734
050366 ...	01/01/92	12/31/92	1.3486	0.9604
050367 ...	01/01/92	12/31/92	1.2729	0.9731
050369 ...	01/01/92	12/31/92	1.2742	0.9851
050385 ...	08/01/91	07/31/92	1.4294	0.9773
050391 ...	01/01/92	12/31/92	1.3910	0.9881
050394 ...	01/01/92	12/31/92	1.5156	0.9992
050396 ...	01/01/92	12/31/92	1.6055	0.9995
050404 ...	01/01/92	12/31/92	1.1480	0.9660
050407 ...	01/01/92	12/31/92	1.3184	0.9966
050411 ...	01/01/92	12/31/92	1.2999	0.9870
050417 ...	01/01/92	12/31/92	1.2033	0.9701
050420 ...	01/01/92	12/31/92	1.3617	0.9955
050425 ...	01/01/92	12/31/92	1.2814	0.9864
050426 ...	09/01/91	08/31/92	1.3923	0.9926
050427 ...	09/01/91	08/31/92	0.7941	0.9704
050431 ...	09/01/91	08/31/92	1.1469	1.0000
050438 ...	10/01/91	09/30/92	1.5605	0.9969
050440 ...	01/01/92	12/31/92	1.3689	0.9801
050441 ...	09/01/91	08/31/92	1.8142	0.9965
050447 ...	09/01/91	08/31/92	1.1677	0.9828
050455 ...	01/01/92	12/31/92	1.9262	0.9983
050458 ...	01/01/92	12/31/92	0.9671	0.9715
050469 ...	01/01/92	12/31/92	1.1386	0.9612

TABLE 9.—1992 TRANSFER ADJUSTED CASE MIX INDEX AND TRANSFER ADJUSTMENT TO DISCHARGES FOR CAPITAL HOSPITAL-SPECIFIC RATE REDETERMINATIONS—Continued

Provider number	Cost reporting period		Transfer adjusted case mix index	Transfer adjustment to discharges
	Begin	End		
050471 ...	09/01/91	08/31/92	1.7968	0.9978
050478 ...	01/01/92	12/31/92	1.0061	0.9368
050481 ...	09/01/91	08/31/92	1.5072	0.9959
050483 ...	10/01/91	09/30/92	1.1576	0.9975
050486 ...	10/01/91	09/30/92	1.4791	0.9945
050489 ...	10/01/91	09/30/92	1.0192	0.9921
050492 ...	09/01/91	08/31/92	1.2879	0.9799
050498 ...	01/01/92	12/31/92	1.2795	0.9769
050503 ...	10/01/91	09/30/92	1.2687	0.9895
050506 ...	08/01/91	07/31/92	1.5083	0.9890
050510 ...	01/01/92	12/31/92	1.2832	0.9872
050512 ...	01/01/92	12/31/92	1.2856	0.9829
050515 ...	01/01/92	12/31/92	1.3422	0.9862
050517 ...	10/01/91	09/30/92	1.4162	0.9944
050523 ...	01/01/92	12/31/92	1.2567	0.9706
050526 ...	09/01/91	08/31/92	1.3200	0.9750
050531 ...	08/01/91	08/31/92	1.3131	0.9934
050537 ...	01/01/92	12/31/92	1.2694	0.9743
050541 ...	01/01/92	12/31/92	1.5277	0.9822
050543 ...	01/01/92	12/31/92	1.2753	1.0000
050549 ...	01/01/92	12/31/92	1.7959	0.9972
050550 ...	09/01/91	08/31/92	1.7556	0.9798
050552 ...	01/01/92	12/31/92	1.1609	0.9937
050557 ...	10/01/91	09/30/92	1.5224	0.9987
050561 ...	01/01/92	12/31/92	1.1698	0.9885
050567 ...	01/01/92	12/31/92	1.6961	0.9972
050570 ...	11/01/91	10/31/92	1.7141	0.9953
050571 ...	10/01/91	09/30/92	1.4550	0.9903
050575 ...	10/01/91	09/30/92	1.2301	0.9960
050580 ...	01/01/92	12/31/92	1.3417	0.9915
050585 ...	01/01/92	12/31/92	1.3207	0.9764
050586 ...	09/01/91	08/31/92	1.2379	0.9875
050587 ...	01/01/92	12/31/92	1.3352	0.9848
050588 ...	09/01/91	08/31/92	1.3853	0.9832
050590 ...	01/01/92	12/31/92	1.3030	0.9812
050591 ...	09/01/91	08/31/92	1.1750	0.9921
050592 ...	09/01/91	08/31/92	1.3344	0.9804
050593 ...	01/01/92	12/31/92	1.3609	0.9680
050597 ...	10/01/91	09/30/92	1.3185	0.9807
050604 ...	01/01/92	12/31/92	1.4123	0.9798
050609 ...	01/01/92	12/31/92	1.3610	0.9880
050619 ...	01/01/92	12/31/92	1.3132	0.9926
050624 ...	10/01/91	09/30/92	1.2654	0.9829
050630 ...	01/01/92	12/31/92	1.2264	0.9822
050635 ...	01/01/92	12/31/92	1.3146	0.9935
050644 ...	09/01/91	08/31/92	1.0671	0.9934
050655 ...	01/01/92	12/31/92	0.8024	0.9886
050663 ...	10/01/91	09/30/92	1.0602	0.9980
050670 ...	09/01/91	08/31/92	0.8312	1.0000
050674 ...	01/01/92	12/31/92	1.1629	0.9917
050677 ...	01/01/92	12/31/92	1.3405	0.9863
050680 ...	01/01/92	12/31/92	1.3376	0.9698
050686 ...	01/01/92	12/31/92	1.3049	0.9909
050690 ...	01/01/92	12/31/92	1.2621	0.9824
050695 ...	01/01/92	12/31/92	1.2593	0.9677
050698 ...	01/01/92	12/31/92	1.2175	1.0000
060001 ...	01/01/92	12/31/92	1.5311	0.9990
060003 ...	01/01/92	12/31/92	1.2249	0.9880
060004 ...	01/01/92	12/31/92	1.2153	0.9626
060006 ...	01/01/92	12/31/92	1.3098	0.9910
060007 ...	01/01/92	12/31/92	1.1682	0.9614
060009 ...	01/01/92	12/31/92	1.4137	0.9975
060010 ...	01/01/92	12/31/92	1.5911	0.9974
060011 ...	01/01/92	12/31/92	1.1935	0.9891
060018 ...	01/01/92	12/31/92	1.2752	0.9763
060022 ...	01/01/92	12/31/92	1.6574	0.9970
060027 ...	01/01/92	12/31/92	1.4324	0.9974
060029 ...	01/01/92	12/31/92	1.0010	0.9524
060030 ...	01/01/92	12/31/92	1.4122	0.9909
060033 ...	01/01/92	12/31/92	1.1283	0.9771
060034 ...	01/01/92	12/31/92	1.3958	0.9958
060037 ...	01/01/92	12/31/92	0.9759	0.9331
060038 ...	01/01/92	12/31/92	1.0358	0.9649

TABLE 9.—1992 TRANSFER ADJUSTED CASE MIX INDEX AND TRANSFER ADJUSTMENT TO DISCHARGES FOR CAPITAL HOSPITAL-SPECIFIC RATE REDETERMINATIONS—Continued

Provider number	Cost reporting period		Transfer adjusted case mix index	Transfer adjustment to discharges
	Begin	End		
060041 ...	01/01/92	12/31/92	1.0472	0.9916
060042 ...	01/01/92	12/31/92	0.9853	0.9701
060043 ...	01/01/92	12/31/92	0.9647	0.9538
060044 ...	01/01/92	12/31/92	1.1799	0.9814
060046 ...	01/01/92	12/31/92	1.0249	0.9792
060047 ...	01/01/92	12/31/92	0.8681	0.9258
060049 ...	01/01/92	12/31/92	1.1039	0.9347
060050 ...	01/01/92	12/31/92	1.2200	0.9700
060052 ...	01/01/92	12/31/92	1.0243	0.9463
060053 ...	01/01/92	12/31/92	1.0391	0.9559
060056 ...	01/01/92	12/31/92	0.9359	0.9729
060057 ...	01/01/92	12/31/92	1.0995	0.9609
060058 ...	01/01/92	12/31/92	0.8763	0.8926
060060 ...	01/01/92	12/31/92	0.9934	0.9793
060062 ...	01/01/92	12/31/92	0.9723	0.8973
060063 ...	01/01/92	12/31/92	1.1480	0.9897
060064 ...	01/01/92	12/31/92	1.4260	0.9960
060065 ...	09/01/91	08/31/92	1.3393	0.9926
060066 ...	01/01/92	12/31/92	0.9805	0.9541
060068 ...	01/01/92	12/31/92	1.2655	0.9712
060070 ...	01/01/92	12/31/92	0.9779	0.9697
060071 ...	01/01/92	12/31/92	1.1859	0.9812
060072 ...	10/01/91	09/30/92	0.9127	0.9643
060073 ...	01/01/92	12/31/92	0.9682	0.9232
060075 ...	01/01/92	12/31/92	1.2354	0.9829
060076 ...	01/01/92	12/31/92	1.4156	0.9873
060085 ...	01/01/92	12/31/92	0.9676	0.9514
060087 ...	09/01/91	08/31/92	1.5356	0.9997
060088 ...	01/01/92	12/31/92	1.0363	0.9403
060090 ...	01/01/92	12/31/92	0.9206	0.9712
060096 ...	11/01/91	10/31/92	0.9800	0.9097
060101 ...	10/01/91	09/30/92	1.5047	0.9675
060103 ...	01/01/92	12/31/92	1.3594	0.9840
070001 ...	10/01/91	09/30/92	1.7528	0.9995
070002 ...	10/01/91	09/30/92	1.8438	0.9993
070003 ...	10/01/91	09/30/92	1.1375	0.9773
070004 ...	10/01/91	09/30/92	1.1173	0.9815
070005 ...	10/01/91	09/30/92	1.3118	0.9897
070006 ...	10/01/91	09/30/92	1.2735	0.9980
070007 ...	10/01/91	09/30/92	1.3923	0.9911
070008 ...	10/01/91	09/30/92	1.2487	0.9921
070009 ...	10/01/91	09/30/92	1.2102	0.9921
070010 ...	10/01/91	09/30/92	1.4882	0.9991
070011 ...	10/01/91	09/30/92	1.2250	0.9884
070012 ...	10/01/91	09/30/92	1.2416	0.9900
070013 ...	10/01/91	09/30/92	1.3870	0.9897
070015 ...	10/01/91	09/30/92	1.2834	0.9912
070016 ...	10/01/91	09/30/92	1.2811	0.9938
070017 ...	10/01/91	09/30/92	1.3201	0.9898
070018 ...	10/01/91	09/30/92	1.3400	0.9955
070019 ...	10/01/91	09/30/92	1.1565	0.9842
070020 ...	10/01/91	09/30/92	1.4185	0.9901
070021 ...	10/01/91	09/30/92	1.2527	0.9868
070022 ...	10/01/91	09/30/92	1.5879	0.9986
070023 ...	10/01/91	09/30/92	1.2977	0.9930
070024 ...	10/01/91	09/30/92	1.2803	0.9906
070025 ...	10/01/91	09/30/92	1.7275	0.9990
070026 ...	10/01/91	09/30/92	1.1869	0.9840
070027 ...	10/01/91	09/30/92	1.2809	0.9890
070028 ...	10/01/91	09/30/92	1.5076	0.9995
070029 ...	10/01/91	09/30/92	1.2211	0.9905
070030 ...	10/01/91	09/30/92	1.2386	0.9934
070031 ...	10/01/91	09/30/92	1.2872	0.9895
070033 ...	10/01/91	09/30/92	1.3677	0.9926
070034 ...	10/01/91	09/30/92	1.3060	0.9965
070035 ...	10/01/91	09/30/92	1.3567	0.9938
070036 ...	10/01/91	09/30/92	1.2812	0.9871
080005 ...	10/01/91	09/30/92	1.3030	0.9911
090002 ...	01/01/92	12/31/92	1.2461	0.9895
090005 ...	01/01/92	12/31/92	1.2978	0.9862
090006 ...	01/01/92	12/31/92	1.3106	0.9974
090007 ...	10/01/91	09/30/92	1.2765	0.9824
090008 ...	01/01/92	12/31/92	1.4644	0.9911

TABLE 9.—1992 TRANSFER ADJUSTED CASE MIX INDEX AND TRANSFER ADJUSTMENT TO DISCHARGES FOR CAPITAL HOSPITAL-SPECIFIC RATE REDETERMINATIONS—Continued

Provider number	Cost reporting period		Transfer adjusted case mix index	Transfer adjustment to discharges
	Begin	End		
100001 ...	10/01/91	09/30/92	1.4423	0.9989
100002 ...	10/01/91	09/30/92	1.3965	0.9868
100004 ...	10/01/91	09/30/92	1.0073	0.9444
100005 ...	10/01/91	09/30/92	0.9957	0.9969
100006 ...	10/01/91	09/30/92	1.5770	0.9979
100007 ...	01/01/92	12/31/92	1.9216	0.9981
100008 ...	10/01/91	09/30/92	1.7208	0.9958
100009 ...	10/01/91	09/30/92	1.4712	0.9976
100012 ...	10/01/91	09/30/92	1.5411	0.9995
100014 ...	10/01/91	09/30/92	1.2861	0.9778
100015 ...	08/01/91	07/31/92	1.3695	0.9931
100017 ...	10/01/91	09/30/92	1.6256	0.9961
100018 ...	10/01/91	09/30/92	1.3410	0.9871
100019 ...	10/01/91	09/30/92	1.5087	0.9991
100020 ...	12/01/91	11/30/92	1.2350	0.9921
100022 ...	10/01/91	09/30/92	1.6345	0.9973
100023 ...	10/01/91	09/30/92	1.2961	0.9853
100024 ...	10/01/91	09/30/92	1.3313	0.9818
100025 ...	01/01/92	12/31/92	1.5517	0.9999
100026 ...	10/01/91	09/30/92	1.5305	0.9996
100028 ...	10/01/91	09/30/92	1.2950	0.9763
100029 ...	10/01/91	09/30/92	1.4407	0.9904
100030 ...	10/01/91	09/30/92	1.2535	0.9803
100034 ...	01/01/92	12/31/92	1.6427	0.9990
100035 ...	09/01/91	08/31/92	1.5034	0.9995
100040 ...	01/01/92	12/31/92	1.7020	0.9976
100042 ...	01/01/92	12/31/92	1.1884	0.9960
100043 ...	10/01/91	09/30/92	1.4288	0.9884
100044 ...	10/01/91	09/30/92	1.3995	0.9909
100045 ...	10/01/91	09/30/92	1.4130	0.9826
100046 ...	01/01/92	12/31/92	1.3161	0.9763
100047 ...	01/01/92	12/31/92	1.6662	0.9952
100048 ...	10/01/91	09/30/92	1.0230	0.9778
100049 ...	10/01/91	09/30/92	1.3538	0.9753
100050 ...	01/01/92	12/31/92	1.1957	0.9958
100051 ...	10/01/91	09/30/92	1.3211	0.9533
100052 ...	10/01/91	09/30/92	1.3044	0.9874
100053 ...	10/01/91	09/30/92	1.2577	0.9953
100054 ...	08/01/91	07/31/92	1.2784	0.9755
100055 ...	10/01/91	09/30/92	1.3603	0.9923
100056 ...	01/01/92	12/31/92	1.5296	0.9936
100057 ...	10/01/91	09/30/92	1.3015	0.9546
100060 ...	01/01/92	12/31/92	1.7592	0.9969
100061 ...	09/01/91	08/31/92	1.5167	0.9942
100062 ...	10/01/91	09/30/92	1.7520	0.9986
100063 ...	01/01/92	12/31/92	1.2610	0.9851
100065 ...	10/01/91	09/30/92	1.1245	0.9948
100069 ...	01/01/92	12/31/92	1.4513	0.9935
100071 ...	10/01/91	09/30/92	1.3487	0.9892
100072 ...	10/01/91	09/30/92	1.3031	0.9760
100074 ...	10/01/91	09/30/92	1.3254	0.9863
100077 ...	09/01/91	08/31/92	1.3020	0.9832
100078 ...	10/01/91	09/30/92	1.2603	0.9753
100080 ...	10/01/91	09/30/92	1.6124	0.9989
100081 ...	10/01/91	09/30/92	1.0808	0.9894
100082 ...	10/01/91	09/30/92	1.4225	0.9988
100085 ...	01/01/92	12/31/92	1.3150	0.9914
100087 ...	10/01/91	09/30/92	1.7753	0.9988
100088 ...	10/01/91	09/30/92	1.6079	0.9941
100089 ...	01/01/92	12/31/92	1.2837	0.9886
100090 ...	10/01/91	09/30/92	1.3542	0.9872
100092 ...	10/01/91	09/30/92	1.5114	0.9974
100093 ...	10/01/91	09/30/92	1.4922	0.9950
100098 ...	10/01/91	09/30/92	1.2589	0.9701
100099 ...	10/01/91	09/30/92	1.2385	0.9613
100100 ...	01/01/92	12/31/92	1.3730	0.9983
100102 ...	10/01/91	09/30/92	1.1513	0.9708
100103 ...	10/01/91	09/30/92	0.9816	0.9582
100105 ...	10/01/91	09/30/92	1.4218	0.9843
100107 ...	09/01/91	08/31/92	1.2631	0.9754
100108 ...	10/01/91	09/30/92	1.1488	0.9894
100109 ...	01/01/92	12/31/92	1.2429	0.9728
100110 ...	09/01/91	08/31/92	1.4473	0.9899

TABLE 9.—1992 TRANSFER ADJUSTED CASE MIX INDEX AND TRANSFER ADJUSTMENT TO DISCHARGES FOR CAPITAL HOSPITAL-SPECIFIC RATE REDETERMINATIONS—Continued

Provider number	Cost reporting period		Transfer adjusted case mix index	Transfer adjustment to discharges
	Begin	End		
100117 ...	10/01/91	09/30/92	1.3994	0.9688
100118 ...	11/01/91	10/31/92	1.2063	0.9790
100121 ...	10/01/91	09/30/92	1.1730	0.9628
100124 ...	11/01/91	10/31/92	1.3512	0.9742
100127 ...	10/01/91	09/30/92	1.6066	0.9989
100128 ...	10/01/91	09/30/92	2.2196	0.9984
100130 ...	10/01/91	09/30/92	1.1714	0.9832
100131 ...	09/01/91	08/31/92	1.2552	0.9852
100132 ...	01/01/92	12/31/92	1.3858	0.9843
100134 ...	10/01/91	09/30/92	1.0333	0.9084
100135 ...	10/01/91	09/30/92	1.5275	0.9983
100137 ...	10/01/91	09/30/92	1.1612	0.9805
100138 ...	10/01/91	09/30/92	1.0076	0.9680
100139 ...	10/01/91	09/30/92	1.0301	0.9682
100140 ...	10/01/91	09/30/92	1.1069	0.9757
100142 ...	10/01/91	09/30/92	1.1256	0.9782
100143 ...	01/01/92	12/31/92	1.1802	1.0000
100144 ...	10/01/91	09/30/92	1.2089	0.9882
100146 ...	10/01/91	09/30/92	1.1095	0.9543
100147 ...	10/01/91	09/30/92	1.1128	0.9717
100150 ...	09/01/91	08/31/92	1.3830	0.9869
100151 ...	01/01/92	12/31/92	1.8024	0.9991
100154 ...	10/01/91	09/30/92	1.6151	0.9986
100156 ...	11/01/91	10/31/92	1.1441	0.9835
100157 ...	10/01/91	09/30/92	1.5638	0.9988
100159 ...	10/01/91	09/30/92	1.0167	0.9590
100162 ...	10/01/91	09/30/92	1.3563	0.9891
100164 ...	10/01/91	09/30/92	0.9560	1.0000
100165 ...	01/01/92	12/31/92	0.9788	0.9986
100167 ...	09/01/91	08/31/92	1.4113	0.9948
100169 ...	11/01/91	10/31/92	1.8395	0.9985
100170 ...	10/01/91	09/30/92	1.4949	0.9962
100173 ...	10/01/91	09/30/92	1.6302	0.9988
100174 ...	10/01/91	09/30/92	1.3789	0.9923
100175 ...	10/01/91	09/30/92	0.9896	0.9679
100176 ...	10/01/91	09/30/92	1.9887	0.9972
100177 ...	10/01/91	09/30/92	1.3346	0.9926
100180 ...	09/01/91	08/31/92	1.4171	0.9928
100181 ...	12/01/91	11/30/92	1.3789	0.9897
100183 ...	01/01/92	12/31/92	1.3753	0.9952
100185 ...	10/01/91	09/30/92	1.1731	0.8991
100187 ...	01/01/92	12/31/92	1.3717	0.9913
100189 ...	01/01/92	12/31/92	1.2670	0.9872
100196 ...	09/01/91	08/31/92	1.2189	0.9842
100199 ...	09/01/91	08/31/92	1.2437	0.9956
100203 ...	09/30/91	09/30/92	1.2141	0.9937
100206 ...	12/01/91	11/30/92	1.4164	0.9908
100208 ...	01/01/92	12/31/92	1.6070	0.9949
100210 ...	01/01/92	12/31/92	1.7159	0.9963
100211 ...	09/01/91	08/31/92	1.3224	0.9796
100212 ...	09/01/91	08/31/92	1.7181	0.9987
100217 ...	09/01/91	08/31/92	1.2196	0.9774
100220 ...	01/01/92	12/31/92	1.8427	0.9994
100221 ...	09/01/91	08/31/92	1.5496	0.9977
100223 ...	09/01/91	08/31/92	1.4358	0.9858
100224 ...	01/01/92	12/31/92	1.4381	0.9891
100226 ...	09/01/91	08/31/92	1.3710	0.9920
100227 ...	09/01/91	08/31/92	1.0175	0.9952
100228 ...	09/01/91	08/31/92	1.2593	0.9909
100229 ...	09/01/91	08/31/92	1.3973	0.9902
100232 ...	10/01/91	09/30/92	1.3255	0.9790
100234 ...	09/01/91	08/31/92	1.3943	0.9904
100235 ...	09/30/91	09/30/92	1.3488	0.9861
100237 ...	10/01/91	09/30/92	2.1856	0.9990
100238 ...	09/01/91	08/31/92	1.3991	0.9919
100241 ...	10/01/91	09/30/92	0.9586	0.9780
100243 ...	09/01/91	08/31/92	1.4388	0.9892
100246 ...	01/01/92	12/31/92	1.3649	0.9920
100248 ...	08/01/91	07/31/92	1.6316	0.9989
100253 ...	10/01/91	09/30/92	1.3995	0.9861
100255 ...	01/01/92	12/31/92	1.3390	0.9954
100259 ...	09/01/91	08/31/92	1.4492	0.9670
100260 ...	10/01/91	09/30/92	1.3746	0.9847

TABLE 9.—1992 TRANSFER ADJUSTED CASE MIX INDEX AND TRANSFER ADJUSTMENT TO DISCHARGES FOR CAPITAL HOSPITAL-SPECIFIC RATE REDETERMINATIONS—Continued

Provider number	Cost reporting period		Transfer adjusted case mix index	Transfer adjustment to discharges
	Begin	End		
100262 ...	10/01/91	09/30/92	1.3958	0.9910
100263 ...	09/01/91	08/31/92	1.4221	0.9790
100265 ...	10/01/91	09/30/92	1.2977	0.9830
100266 ...	10/01/91	09/30/92	1.3576	0.9788
100267 ...	01/01/92	12/31/92	1.2996	0.9807
100269 ...	09/01/91	08/31/92	1.4228	0.9831
100273 ...	09/01/91	08/31/92	1.1433	0.9715
100275 ...	01/01/92	12/31/92	1.3791	0.9874
100278 ...	10/01/91	09/30/92	0.9640	0.8676
110001 ...	10/01/91	09/30/92	1.1865	0.9890
110002 ...	01/01/92	12/31/92	1.2464	0.9756
110004 ...	10/01/91	09/30/92	1.1860	0.9927
110005 ...	01/01/92	12/31/92	1.3790	0.9465
110006 ...	10/01/91	09/30/92	1.2544	0.9935
110009 ...	11/01/91	10/31/92	1.0189	0.9688
110010 ...	09/01/91	08/31/92	2.0181	0.9986
110013 ...	10/01/91	09/30/92	1.0322	0.9601
110014 ...	08/01/91	07/31/92	1.0257	0.9864
110018 ...	01/01/92	12/31/92	1.1554	0.9579
110020 ...	09/01/91	08/31/92	1.2338	0.9839
110023 ...	01/01/92	12/31/92	1.2085	0.9457
110024 ...	01/01/92	12/31/92	1.3335	0.9896
110025 ...	10/01/91	09/30/92	1.2842	0.9845
110028 ...	12/30/91	12/28/92	1.6148	0.9986
110029 ...	10/01/91	09/30/92	1.2851	0.9868
110030 ...	09/01/91	08/31/92	1.2345	0.9665
110032 ...	10/01/91	09/30/92	1.1055	0.9656
110033 ...	08/01/91	07/31/92	1.3551	0.9877
110036 ...	01/01/92	12/31/92	1.6949	0.9982
110037 ...	01/01/92	12/31/92	1.0421	0.9886
110038 ...	10/01/91	09/30/92	1.3637	0.9947
110044 ...	10/01/91	09/30/92	1.1433	0.9681
110045 ...	08/01/91	07/31/92	1.0687	0.9667
110046 ...	11/01/91	10/31/92	1.2013	0.9732
110048 ...	10/01/91	09/30/92	1.1205	0.9654
110049 ...	10/01/91	09/30/92	1.0682	0.9691
110050 ...	01/01/92	12/31/92	1.0159	0.9761
110059 ...	10/01/91	09/30/92	1.2223	0.9760
110061 ...	10/01/91	09/30/92	1.0027	0.9582
110063 ...	12/01/91	11/30/92	1.0131	0.9666
110065 ...	01/01/92	12/31/92	0.9454	0.9868
110070 ...	11/01/91	10/31/92	0.9889	0.9270
110072 ...	01/01/92	12/31/92	0.9693	0.9576
110073 ...	08/01/91	07/31/92	1.2179	0.9628
110074 ...	10/01/91	09/30/92	1.3028	0.9875
110075 ...	10/01/91	09/30/92	1.2164	0.9833
110076 ...	10/01/91	09/30/92	1.3461	0.9873
110078 ...	09/01/91	08/31/92	1.5748	0.9982
110079 ...	01/01/92	12/31/92	1.3562	0.9977
110080 ...	10/01/91	09/30/92	1.1105	0.9952
110082 ...	01/01/92	12/31/92	2.1219	0.9989
110083 ...	01/01/92	12/31/92	1.6028	0.9992
110086 ...	09/01/91	08/31/92	1.0576	0.9669
110087 ...	09/01/91	08/31/92	1.2495	0.9866
110088 ...	01/01/92	12/31/92	0.8704	0.9264
110089 ...	01/01/92	12/31/92	1.2237	0.9770
110091 ...	10/01/91	09/30/92	1.3424	0.9781
110092 ...	10/01/91	09/30/92	1.0662	0.9782
110095 ...	10/01/91	09/30/92	1.2931	0.9808
110096 ...	01/01/92	12/31/92	1.0954	0.9769
110097 ...	01/01/92	12/31/92	1.0599	0.9745
110100 ...	01/01/92	12/31/92	1.0552	0.9681
110105 ...	10/01/91	09/30/92	1.1548	0.9858
110107 ...	10/01/91	09/30/92	1.6346	0.9980
110111 ...	10/01/91	09/30/92	1.1352	0.9794
110112 ...	09/01/91	08/31/92	1.0593	0.9792
110114 ...	10/01/91	09/30/92	1.1151	0.9750
110115 ...	01/01/92	12/31/92	1.6905	0.9985
110118 ...	10/01/91	09/30/92	1.0214	0.9405
110120 ...	10/01/91	09/30/92	1.0630	0.9561
110121 ...	10/01/91	09/30/92	1.1212	0.9747
110122 ...	10/01/91	09/30/92	1.3102	0.9883
110129 ...	01/01/92	12/31/92	1.6243	0.9983

TABLE 9.—1992 TRANSFER ADJUSTED CASE MIX INDEX AND TRANSFER ADJUSTMENT TO DISCHARGES FOR CAPITAL HOSPITAL-SPECIFIC RATE REDETERMINATIONS—Continued

Provider number	Cost reporting period		Transfer adjusted case mix index	Transfer adjustment to discharges
	Begin	End		
110130 ...	12/01/91	11/30/92	1.0666	0.9853
110142 ...	10/01/91	09/30/92	1.0712	0.9892
110144 ...	10/01/91	09/30/92	1.1831	0.9518
110146 ...	01/01/92	12/31/92	0.9593	0.9439
110150 ...	10/01/91	09/30/92	1.2946	0.9749
110166 ...	10/01/91	09/30/92	1.4311	0.9858
110171 ...	11/01/91	10/31/92	1.3401	0.9916
110172 ...	10/01/91	09/30/92	1.2452	0.9901
110177 ...	09/01/91	08/31/92	1.3811	0.9869
110179 ...	01/01/92	12/31/92	1.1576	0.9837
110187 ...	01/01/92	12/31/92	1.1718	0.9538
110189 ...	01/01/92	12/31/92	1.0736	0.9620
110190 ...	01/01/92	12/31/92	1.1542	0.9441
110192 ...	09/01/91	08/31/92	1.3206	0.9842
110193 ...	01/01/92	12/31/92	1.2250	0.9770
110195 ...	10/01/91	09/30/92	1.1524	0.9784
110198 ...	11/01/91	10/31/92	1.3514	0.9641
110200 ...	10/01/91	09/30/92	1.9640	0.9974
110201 ...	09/01/91	08/31/92	1.3497	0.9864
110203 ...	10/01/91	09/30/92	0.9947	0.9839
120008 ...	01/01/92	12/31/92	1.1525	0.9911
120011 ...	01/01/92	12/31/92	1.2484	0.9963
120022 ...	01/01/92	12/31/92	1.6308	0.9989
130001 ...	12/01/91	11/30/92	0.9579	0.9686
130002 ...	10/01/91	09/30/92	1.3832	0.9849
130005 ...	01/01/92	12/31/92	1.3965	0.9829
130006 ...	10/01/91	09/30/92	1.7355	0.9989
130009 ...	10/01/91	09/30/92	0.9902	0.9577
130010 ...	10/01/91	09/30/92	0.9366	0.9790
130011 ...	01/01/92	12/31/92	1.4033	0.9741
130012 ...	10/01/91	09/30/92	1.0338	0.9188
130014 ...	10/01/91	09/30/92	1.2757	0.9839
130015 ...	10/01/91	09/30/92	0.9879	0.9570
130016 ...	10/01/91	09/30/92	0.8296	0.9910
130018 ...	10/01/91	09/30/92	1.5366	0.9966
130019 ...	01/01/92	12/31/92	1.2135	0.9657
130021 ...	12/01/91	11/30/92	0.8163	0.9906
130024 ...	09/01/91	08/31/92	1.1242	0.9540
130025 ...	10/01/91	09/30/92	1.0692	0.9813
130026 ...	01/01/92	12/31/92	1.1071	0.9740
130027 ...	10/01/91	09/30/92	0.8829	0.9840
130028 ...	10/01/91	09/30/92	1.2349	0.9916
130030 ...	10/01/91	09/30/92	1.0872	0.9598
130031 ...	10/01/91	09/30/92	0.9441	0.9811
130034 ...	10/01/91	09/30/92	0.9832	0.9498
130036 ...	01/01/92	12/31/92	1.2102	0.9828
130037 ...	10/01/91	09/30/92	1.1593	0.9599
130039 ...	10/01/91	09/30/92	1.3344	0.9771
130040 ...	10/01/91	09/30/92	0.8622	0.9806
130043 ...	10/01/91	09/30/92	1.0157	0.9806
130044 ...	10/01/91	09/30/92	0.8828	0.9573
130045 ...	10/01/91	09/30/92	0.9083	0.9723
130049 ...	12/01/91	11/30/92	1.2285	0.9870
130054 ...	10/01/91	09/30/92	1.0264	0.9867
130056 ...	10/01/91	09/30/92	0.9922	1.0000
140002 ...	01/01/92	12/31/92	1.2321	0.9898
140004 ...	10/01/91	09/30/92	0.9796	0.9667
140007 ...	09/01/91	08/31/92	1.4213	0.9964
140008 ...	01/01/92	12/31/92	1.3808	0.9925
140010 ...	10/01/91	09/30/92	1.3367	0.9867
140012 ...	01/01/92	12/31/92	1.2588	0.9911
140013 ...	01/01/92	12/31/92	1.5634	0.9973
140015 ...	10/01/91	09/30/92	1.2340	0.9925
140019 ...	09/01/91	08/31/92	0.8997	0.9683
140029 ...	01/01/92	12/31/92	1.3479	0.9960
140031 ...	01/01/92	12/31/92	1.0365	0.9761
140033 ...	09/01/91	08/31/92	1.2096	0.9827
140034 ...	01/01/92	12/31/92	1.1394	0.9841
140036 ...	10/01/91	09/30/92	1.1372	0.9734
140039 ...	01/01/92	12/31/92	1.0027	0.9657
140046 ...	01/01/92	12/31/92	1.2327	0.9748
140048 ...	01/01/92	12/31/92	1.2178	0.9937
140049 ...	11/01/91	10/31/92	1.3294	0.9968

TABLE 9.—1992 TRANSFER ADJUSTED CASE MIX INDEX AND TRANSFER ADJUSTMENT TO DISCHARGES FOR CAPITAL HOSPITAL-SPECIFIC RATE REDETERMINATIONS—Continued

Provider number	Cost reporting period		Transfer adjusted case mix index	Transfer adjustment to discharges
	Begin	End		
140051 ...	10/01/91	09/30/92	1.3270	0.9904
140052 ...	01/01/92	12/31/92	1.2988	0.9878
140054 ...	09/29/91	08/26/92	1.3440	0.9876
140058 ...	10/01/91	09/30/92	1.1506	0.9857
140062 ...	01/01/92	12/31/92	1.2437	0.9885
140063 ...	01/01/92	12/31/92	1.3457	0.9941
140064 ...	10/01/91	09/30/92	1.2199	0.9858
140065 ...	01/01/92	12/31/92	1.4088	0.9955
140066 ...	01/01/92	12/31/92	1.2196	0.9899
140067 ...	10/01/91	09/30/92	1.7616	0.9979
140074 ...	10/01/91	09/30/92	1.1003	0.9566
140079 ...	01/01/92	12/31/92	1.2908	0.9926
140080 ...	01/01/92	12/31/92	1.6604	0.9958
140084 ...	01/01/92	12/31/92	1.2048	0.9921
140087 ...	01/01/92	12/31/92	1.4509	0.9919
140090 ...	01/01/92	12/31/92	1.3536	0.9971
140093 ...	09/01/91	08/31/92	1.2179	0.9801
140094 ...	01/01/92	12/31/92	1.2309	0.9939
140095 ...	09/01/91	08/31/92	1.2286	0.9841
140097 ...	01/01/92	12/31/92	0.9500	0.9775
140098 ...	01/01/92	12/31/92	1.2525	0.9883
140101 ...	12/01/91	11/30/92	1.1348	0.9794
140103 ...	01/01/92	12/31/92	1.3538	0.9911
140105 ...	01/01/92	12/31/92	1.3176	0.9900
140107 ...	01/01/92	12/31/92	1.1127	0.9538
140108 ...	01/01/92	12/31/92	1.2187	0.9930
140112 ...	10/01/91	09/30/92	1.0861	0.9676
140113 ...	01/01/92	12/31/92	1.4464	0.9969
140118 ...	01/01/92	12/31/92	1.5750	0.9976
140122 ...	01/01/92	12/31/92	1.4340	0.9974
140123 ...	01/01/92	12/31/92	1.2312	0.9967
140125 ...	01/01/92	12/31/92	1.2126	0.9898
140128 ...	10/01/91	09/30/92	1.1289	0.9590
140129 ...	01/01/92	12/31/92	1.0500	0.9836
140130 ...	01/01/92	12/31/92	1.2019	0.9939
140132 ...	10/01/91	09/30/92	1.5149	0.9985
140135 ...	10/01/91	09/30/92	1.2147	0.9859
140137 ...	01/01/92	12/31/92	1.0174	0.9517
140139 ...	10/01/91	09/30/92	1.0847	0.9647
140141 ...	08/01/91	07/31/92	0.9802	0.9700
140143 ...	10/01/91	09/30/92	1.0712	0.9826
140147 ...	12/01/91	11/30/92	1.1752	0.9794
140148 ...	10/01/91	09/30/92	1.6335	0.9988
140152 ...	01/01/92	12/31/92	1.0862	0.9963
140155 ...	01/01/92	12/31/92	1.2020	0.9914
140160 ...	08/01/91	07/31/92	1.1467	0.9813
140161 ...	10/01/91	09/30/92	1.1229	0.9760
140162 ...	10/01/91	09/30/92	1.7067	0.9948
140167 ...	10/01/91	09/30/92	1.1326	0.9826
140176 ...	10/01/91	09/30/92	1.2278	0.9881
140180 ...	01/01/92	12/31/92	1.4157	0.9975
140181 ...	01/01/92	12/31/92	1.2698	0.9940
140182 ...	11/01/91	10/31/92	1.2992	0.9848
140185 ...	01/01/92	12/31/92	1.3862	0.9869
140186 ...	01/01/92	12/31/92	1.2332	0.9900
140188 ...	09/01/91	08/31/92	0.9892	0.9548
140191 ...	01/01/92	12/31/92	1.3866	0.9976
140192 ...	10/01/91	09/30/92	0.9637	0.9843
140197 ...	10/01/91	09/30/92	1.2036	0.9832
140202 ...	01/01/92	12/31/92	1.2760	0.9845
140203 ...	10/01/91	09/30/92	1.2370	0.9747
140206 ...	10/01/91	09/30/92	1.0963	0.9894
140207 ...	01/01/92	12/31/92	1.4332	0.9983
140208 ...	01/01/92	12/31/92	1.4550	0.9981
140209 ...	01/01/92	12/31/92	1.6839	0.9997
140211 ...	09/01/91	08/31/92	1.1735	0.9825
140212 ...	01/01/92	12/31/92	1.1757	0.9982
140217 ...	09/01/91	08/31/92	1.2483	0.9924
140220 ...	10/01/91	09/30/92	1.1099	0.9799
140233 ...	10/01/91	09/30/92	1.6447	0.9970
140236 ...	10/01/91	09/30/92	1.0058	0.9841
140240 ...	01/01/92	12/31/92	1.3907	0.9959
140252 ...	11/01/91	10/31/92	1.3333	0.9939

TABLE 9.—1992 TRANSFER ADJUSTED CASE MIX INDEX AND TRANSFER ADJUSTMENT TO DISCHARGES FOR CAPITAL HOSPITAL-SPECIFIC RATE REDETERMINATIONS—Continued

Provider number	Cost reporting period		Transfer adjusted case mix index	Transfer adjustment to discharges
	Begin	End		
140253 ...	10/01/91	09/30/92	1.1978	0.9870
140258 ...	01/01/92	12/31/92	1.4176	0.9958
140271 ...	01/01/92	12/31/92	1.6629	0.9985
140281 ...	09/01/91	08/31/92	1.5602	0.9977
140285 ...	01/01/92	12/31/92	1.3315	0.9852
140288 ...	01/01/92	12/31/92	1.5942	0.9966
140289 ...	01/01/92	12/31/92	1.2643	0.9870
140290 ...	09/01/91	08/31/92	1.3911	0.9831
140291 ...	01/01/92	12/31/92	1.2639	0.9746
140292 ...	01/01/92	12/31/92	1.2049	0.9737
140294 ...	01/01/92	12/31/92	1.1280	0.9681
150001 ...	01/01/92	12/31/92	1.0865	0.9793
150002 ...	01/01/92	12/31/92	1.3657	0.9957
150003 ...	01/01/92	12/31/92	1.6810	0.9971
150004 ...	01/01/92	12/31/92	1.4556	0.9985
150005 ...	01/01/92	12/31/92	1.1771	0.9845
150006 ...	01/01/92	12/31/92	1.2209	0.9783
150007 ...	01/01/92	12/31/92	1.2362	0.9746
150008 ...	01/01/92	12/31/92	1.3538	0.9982
150009 ...	01/01/92	12/31/92	1.2975	0.9934
150010 ...	01/01/92	12/31/92	1.2134	0.9829
150013 ...	01/01/92	12/31/92	1.2465	0.9704
150015 ...	01/01/92	12/31/92	1.2102	0.9898
150017 ...	01/01/92	12/31/92	1.7812	0.9992
150018 ...	01/01/92	12/31/92	1.2701	0.9841
150020 ...	10/01/91	09/30/92	1.1002	0.9924
150021 ...	01/01/92	12/31/92	1.6604	0.9968
150022 ...	01/01/92	12/31/92	1.1466	0.9796
150023 ...	09/01/91	08/31/92	1.4020	0.9959
150024 ...	01/01/92	12/31/92	1.2102	0.9923
150026 ...	01/01/92	12/31/92	1.2214	0.9778
150027 ...	01/01/92	12/31/92	0.9947	0.9670
150029 ...	01/01/92	12/31/92	1.2180	0.9838
150030 ...	01/01/92	12/31/92	1.0820	0.9744
150031 ...	10/01/91	09/30/92	0.9997	0.9587
150033 ...	01/01/92	12/31/92	1.5813	0.9990
150034 ...	01/01/92	12/31/92	1.2838	0.9973
150035 ...	01/01/92	12/31/92	1.4009	0.9968
150036 ...	01/01/92	12/31/92	1.0153	0.9935
150037 ...	01/01/92	12/31/92	1.2309	0.9756
150038 ...	01/01/92	12/31/92	1.2268	0.9813
150039 ...	10/01/91	09/30/92	0.9572	0.9917
150042 ...	01/01/92	12/31/92	1.2136	0.9888
150044 ...	01/01/92	12/31/92	1.2796	0.9902
150045 ...	10/01/91	09/30/92	1.1689	0.9734
150047 ...	01/01/92	12/31/92	1.6450	0.9985
150048 ...	01/01/92	12/31/92	1.1687	0.9881
150049 ...	01/01/92	12/31/92	1.1275	0.9771
150050 ...	01/01/92	12/31/92	1.1572	0.9791
150051 ...	10/01/91	09/30/92	1.2642	0.9928
150052 ...	01/01/92	12/31/92	0.9972	0.9627
150053 ...	01/01/92	12/31/92	1.0294	0.9680
150054 ...	01/01/92	12/31/92	1.1586	0.9834
150057 ...	01/01/92	12/31/92	2.3371	0.9934
150058 ...	01/01/92	12/31/92	1.5967	0.9986
150059 ...	01/01/92	12/31/92	1.1648	0.9863
150060 ...	01/01/92	12/31/92	1.1858	0.9705
150061 ...	01/01/92	12/31/92	1.2247	0.9758
150062 ...	01/01/92	12/31/92	1.0102	0.9602
150063 ...	01/01/92	12/31/92	1.0909	0.9762
150064 ...	10/01/91	09/30/92	1.0525	0.9700
150065 ...	01/01/92	12/31/92	1.1178	0.9748
150066 ...	01/01/92	12/31/92	1.0756	0.9630
150067 ...	01/01/92	12/31/92	1.0817	0.9765
150069 ...	01/01/92	12/31/92	1.2445	0.9753
150070 ...	01/01/92	12/31/92	1.0736	0.9649
150071 ...	01/01/92	12/31/92	1.0890	0.9565
150072 ...	01/01/92	12/31/92	1.2986	0.9724
150073 ...	01/01/92	12/31/92	1.0339	0.9741
150074 ...	10/01/91	09/30/92	1.5018	0.9993
150075 ...	10/01/91	09/30/92	1.2068	0.9956
150078 ...	01/01/92	12/31/92	1.0191	0.9814
150079 ...	10/01/91	09/30/92	1.1277	0.9745

TABLE 9.—1992 TRANSFER ADJUSTED CASE MIX INDEX AND TRANSFER ADJUSTMENT TO DISCHARGES FOR CAPITAL HOSPITAL-SPECIFIC RATE REDETERMINATIONS—Continued

Provider number	Cost reporting period		Transfer adjusted case mix index	Transfer adjustment to discharges
	Begin	End		
150086 ...	01/01/92	12/31/92	1.1952	0.9810
150091 ...	01/01/92	12/31/92	1.1606	0.9521
150092 ...	01/01/92	12/31/92	1.0379	0.9193
150094 ...	01/01/92	12/31/92	1.0220	0.9880
150095 ...	10/01/91	09/30/92	1.0142	0.9826
150096 ...	01/01/92	12/31/92	1.0045	0.9586
150097 ...	01/01/92	12/31/92	1.0666	0.9679
150098 ...	01/01/92	12/31/92	1.1215	0.9595
150101 ...	01/01/92	12/31/92	1.0876	0.9603
150102 ...	01/01/92	12/31/92	1.0801	0.9839
150104 ...	01/01/92	12/31/92	1.1612	0.9593
150105 ...	01/01/92	12/31/92	1.1338	0.9669
150106 ...	01/01/92	12/31/92	1.0605	0.9650
150109 ...	01/01/92	12/31/92	1.2500	0.9958
150111 ...	01/01/92	12/31/92	1.0823	0.9788
150112 ...	01/01/92	12/31/92	1.1896	0.9853
150113 ...	01/01/92	12/31/92	1.1706	0.9856
150114 ...	01/01/92	12/31/92	1.0350	0.9609
150122 ...	01/01/92	12/31/92	1.1169	0.9466
150123 ...	08/01/91	07/31/92	0.9703	0.9894
150124 ...	10/01/91	09/30/92	1.1744	0.9792
150127 ...	10/01/91	09/30/92	1.0763	0.9543
150128 ...	10/01/91	09/30/92	1.1775	0.9918
150129 ...	09/01/91	08/31/92	1.2346	0.9894
150132 ...	01/01/92	12/31/92	1.3499	0.9982
150133 ...	01/01/92	12/31/92	1.1965	0.9560
150136 ...	09/01/91	08/31/92	0.9106	1.0000
160001 ...	11/01/91	10/31/92	1.1724	0.9721
160002 ...	10/01/91	09/30/92	1.2928	0.9632
160003 ...	01/01/92	12/31/92	1.0688	0.9745
160008 ...	10/01/91	09/30/92	1.1203	0.9786
160024 ...	01/01/92	12/31/92	1.5259	0.9972
160044 ...	01/01/92	12/31/92	1.2759	0.9705
160045 ...	09/01/91	08/31/92	1.6482	0.9987
160047 ...	10/01/91	09/30/92	1.3997	0.9900
160051 ...	10/01/91	09/30/92	1.1529	0.9730
160071 ...	01/01/92	12/31/92	1.0498	0.9490
160072 ...	01/01/92	12/31/92	1.0701	0.9790
160082 ...	08/01/91	07/31/92	1.7268	0.9995
160092 ...	01/01/92	12/31/92	0.9476	0.9520
160099 ...	10/01/91	09/30/92	1.0936	0.9650
160104 ...	12/01/91	11/30/92	1.2143	0.9829
160110 ...	01/01/92	12/31/92	1.5237	0.9977
160111 ...	09/01/91	08/31/92	1.0698	0.9784
160122 ...	10/01/91	09/30/92	1.1978	0.9575
160129 ...	01/01/92	12/31/92	1.0885	0.9532
160130 ...	10/01/91	09/30/92	1.1110	0.9769
160131 ...	01/01/92	12/31/92	1.1627	0.9780
160133 ...	01/01/92	12/31/92	1.1128	0.9839
160138 ...	01/01/92	12/31/92	1.0635	0.9666
160147 ...	01/01/92	12/31/92	1.1967	0.9680
170001 ...	01/01/92	12/31/92	1.1893	0.9753
170004 ...	01/01/92	12/31/92	1.0133	0.9701
170006 ...	10/01/91	09/30/92	1.2083	0.9839
170008 ...	09/01/91	08/31/92	1.0676	0.9721
170012 ...	10/01/91	09/30/92	1.4371	0.9870
170014 ...	01/01/92	12/31/92	1.0626	0.9503
170017 ...	01/01/92	12/31/92	1.2185	0.9863
170018 ...	01/01/92	12/31/92	0.9917	0.9555
170019 ...	01/01/92	12/31/92	1.1695	0.9764
170022 ...	10/01/91	09/30/92	1.2008	0.9599
170023 ...	01/01/92	12/31/92	1.3691	0.9885
170024 ...	10/01/91	09/30/92	1.2087	0.9769
170026 ...	10/01/91	09/30/92	1.0376	0.9790
170027 ...	10/01/91	09/30/92	1.2242	0.9817
170030 ...	01/01/92	12/31/92	0.9061	0.9286
170031 ...	01/01/92	12/31/92	0.8844	0.9894
170032 ...	10/01/91	09/30/92	1.0263	0.9667
170033 ...	01/01/92	12/31/92	1.2700	0.9788
170034 ...	01/01/92	12/31/92	0.9563	0.9962
170035 ...	10/01/91	09/30/92	0.9437	0.9086
170036 ...	01/01/92	12/31/92	0.8329	0.9468
170038 ...	01/01/92	12/31/92	0.9091	0.9436

TABLE 9.—1992 TRANSFER ADJUSTED CASE MIX INDEX AND TRANSFER ADJUSTMENT TO DISCHARGES FOR CAPITAL HOSPITAL-SPECIFIC RATE REDETERMINATIONS—Continued

Provider number	Cost reporting period		Transfer adjusted case mix index	Transfer adjustment to discharges
	Begin	End		
170039 ...	01/01/92	12/31/92	1.0317	0.9819
170041 ...	01/01/92	12/31/92	1.0022	0.9725
170043 ...	01/01/92	12/31/92	0.9838	0.9756
170049 ...	01/01/92	12/31/92	1.2877	0.9852
170050 ...	01/01/92	12/31/92	0.8202	0.9418
170054 ...	01/01/92	12/31/92	1.0711	0.9608
170055 ...	01/01/92	12/31/92	1.0181	0.9911
170060 ...	01/01/92	12/31/92	1.0354	0.9701
170062 ...	10/01/91	09/30/92	0.9213	0.9731
170063 ...	01/01/92	12/31/92	0.8547	0.9537
170064 ...	01/01/92	12/31/92	1.0561	0.9712
170066 ...	01/01/92	12/31/92	0.8923	0.9223
170068 ...	01/01/92	12/31/92	1.2844	0.9804
170070 ...	01/01/92	12/31/92	0.9668	0.9595
170073 ...	01/01/92	12/31/92	1.0717	0.9588
170075 ...	10/01/91	09/30/92	0.8671	0.9695
170076 ...	01/01/92	12/31/92	1.1315	0.9990
170077 ...	01/01/92	12/31/92	0.9082	0.9602
170079 ...	01/01/92	12/31/92	0.9923	0.9759
170080 ...	01/01/92	12/31/92	1.0063	0.9733
170081 ...	01/01/92	12/31/92	1.0199	0.9666
170082 ...	01/01/92	12/31/92	0.9100	0.9599
170086 ...	10/01/91	09/30/92	1.6157	0.9997
170087 ...	10/01/91	09/30/92	1.3504	0.9984
170088 ...	01/01/92	12/31/92	0.8895	0.9458
170090 ...	01/01/92	12/31/92	1.0146	0.9386
170092 ...	01/01/92	12/31/92	0.8042	0.9894
170094 ...	01/01/92	12/31/92	1.0848	0.9643
170097 ...	01/01/92	12/31/92	0.9445	0.9555
170098 ...	01/01/92	12/31/92	1.0952	0.9830
170099 ...	01/01/92	12/31/92	1.3686	0.9982
170101 ...	10/01/91	09/30/92	1.0528	0.9800
170102 ...	01/01/92	12/31/92	0.9585	0.9485
170104 ...	01/01/92	12/31/92	1.4286	0.9989
170106 ...	09/01/91	08/31/92	0.9027	0.8932
170108 ...	01/01/92	12/31/92	0.8520	0.9420
170109 ...	01/01/92	12/31/92	1.0978	0.9627
170110 ...	01/01/92	12/31/92	0.9357	0.9761
170112 ...	01/01/92	12/31/92	0.9539	0.9785
170113 ...	01/01/92	12/31/92	1.0483	0.9721
170114 ...	01/01/92	12/31/92	1.0620	0.9657
170116 ...	01/01/92	12/31/92	1.0899	0.9667
170117 ...	01/01/92	12/31/92	0.9137	0.9896
170119 ...	01/01/92	12/31/92	1.0035	0.9698
170120 ...	01/01/92	12/31/92	1.3420	0.9815
170121 ...	01/01/92	12/31/92	0.8737	0.9911
170122 ...	10/01/91	09/30/92	1.8179	0.9984
170123 ...	01/01/92	12/31/92	1.6939	0.9989
170124 ...	01/01/92	12/31/92	0.9592	0.9617
170126 ...	10/01/91	09/30/92	0.8968	0.9607
170128 ...	01/01/92	12/31/92	1.0045	0.9191
170131 ...	01/01/92	12/31/92	1.2020	0.9727
170134 ...	01/01/92	12/31/92	0.9361	0.9857
170137 ...	01/01/92	12/31/92	1.1745	0.9793
170139 ...	01/01/92	12/31/92	0.9981	0.9838
170143 ...	01/01/92	12/31/92	1.1626	0.9714
170144 ...	10/01/91	09/30/92	1.4402	0.9935
170145 ...	01/01/92	12/31/92	1.2000	0.9907
170146 ...	01/01/92	12/31/92	1.3386	0.9974
170147 ...	10/01/91	09/30/92	1.1690	0.9763
170148 ...	10/01/91	09/30/92	1.3316	0.9981
170150 ...	01/01/92	12/31/92	1.1036	0.9740
170151 ...	01/01/92	12/31/92	1.0460	0.9809
170152 ...	01/01/92	12/31/92	1.0044	0.9748
170160 ...	01/01/92	12/31/92	0.8755	0.9578
170164 ...	01/01/92	12/31/92	1.0135	0.9747
170166 ...	01/01/92	12/31/92	1.0008	0.9888
170168 ...	01/01/92	12/31/92	0.8127	0.9118
170174 ...	01/01/92	12/31/92	0.8558	0.9574
170175 ...	09/01/91	08/31/92	1.2436	0.9705
170176 ...	09/01/91	08/31/92	1.4609	0.9972
180001 ...	01/01/92	12/31/92	1.1934	0.9945
180004 ...	10/01/91	09/30/92	1.1546	0.9661

TABLE 9.—1992 TRANSFER ADJUSTED CASE MIX INDEX AND TRANSFER ADJUSTMENT TO DISCHARGES FOR CAPITAL HOSPITAL-SPECIFIC RATE REDETERMINATIONS—Continued

Provider number	Cost reporting period		Transfer adjusted case mix index	Transfer adjustment to discharges
	Begin	End		
180009 ...	10/01/91	09/30/92	1.2101	0.9968
180010 ...	09/01/91	08/31/92	1.8258	0.9989
180011 ...	09/01/91	08/31/92	1.1506	0.9688
180014 ...	09/01/91	08/31/92	1.5286	0.9989
180015 ...	01/01/92	12/31/92	1.1279	0.9914
180016 ...	01/01/92	12/31/92	1.2078	0.9880
180017 ...	10/01/91	09/30/92	1.2806	0.9913
180019 ...	12/01/91	11/30/92	1.2550	0.9824
180023 ...	10/01/91	09/30/92	0.8663	0.9717
180025 ...	09/01/91	08/31/92	1.1622	0.9720
180026 ...	01/01/92	12/31/92	1.2114	0.9546
180030 ...	10/01/91	09/30/92	1.1773	0.9777
180031 ...	10/01/91	09/30/92	1.0290	0.9842
180035 ...	01/01/92	12/31/92	1.4695	0.9992
180036 ...	01/01/92	12/31/92	1.1212	0.9905
180037 ...	09/01/91	08/31/92	1.2790	0.9909
180040 ...	01/01/92	12/31/92	1.9702	0.9988
180041 ...	10/01/91	09/30/92	1.0594	0.9617
180043 ...	10/01/91	09/30/92	1.0996	0.9613
180044 ...	10/01/91	09/30/92	1.0887	0.9781
180045 ...	01/01/92	12/31/92	1.1774	0.9901
180048 ...	10/01/91	09/30/92	1.1845	0.9837
180051 ...	12/01/91	11/30/92	1.1723	0.9786
180058 ...	01/01/92	12/31/92	0.8998	0.9502
180059 ...	01/01/92	12/31/92	0.9195	0.9752
180060 ...	01/01/92	12/31/92	0.9410	1.0000
180063 ...	10/01/91	09/30/92	1.0571	0.9882
180064 ...	10/01/91	09/30/92	1.1381	0.9696
180066 ...	11/01/91	10/31/92	1.2600	0.9651
180072 ...	10/01/91	09/30/92	1.0281	0.9768
180078 ...	10/01/91	09/30/92	1.0976	0.9836
180079 ...	10/01/91	09/30/92	0.9993	0.9815
180081 ...	01/01/92	12/31/92	1.4930	0.9946
180085 ...	01/01/92	12/31/92	1.3214	0.9944
180088 ...	01/01/92	12/31/92	1.6746	0.9985
180094 ...	01/01/92	12/31/92	0.9938	0.9731
180095 ...	10/01/91	09/30/92	1.0080	0.9713
180099 ...	10/01/91	09/30/92	1.0498	0.9846
180102 ...	01/01/92	12/31/92	1.4371	0.9972
180103 ...	09/01/91	08/31/92	1.9116	0.9969
180104 ...	09/01/91	08/31/92	1.3909	0.9990
180106 ...	09/01/91	08/31/92	0.8993	0.9696
180115 ...	11/01/91	10/31/92	1.0053	0.9662
180116 ...	09/01/91	08/31/92	1.3589	0.9856
180120 ...	01/01/92	12/31/92	0.9085	0.9510
180121 ...	01/01/92	12/31/92	1.1222	0.9735
180123 ...	09/01/91	08/31/92	1.4361	0.9952
180124 ...	10/01/91	09/30/92	1.3194	0.9952
180126 ...	11/01/91	10/31/92	1.0137	0.9530
180127 ...	08/01/91	07/31/92	1.2055	0.9826
180128 ...	09/01/91	08/31/92	1.1296	0.9851
180130 ...	09/01/91	08/30/92	1.3604	0.9960
180132 ...	09/01/91	08/31/92	1.2470	0.9839
180133 ...	09/01/91	08/31/92	1.2237	0.9902
180136 ...	09/01/91	08/31/92	1.3416	0.9936
180137 ...	09/01/91	08/31/92	1.7632	0.9901
180138 ...	01/01/92	12/31/92	1.2139	0.9889
190002 ...	10/01/91	09/30/92	1.5783	0.9992
190003 ...	09/01/91	08/31/92	1.3731	0.9720
190004 ...	10/01/91	09/30/92	1.2763	0.9859
190013 ...	01/01/92	12/31/92	1.2339	0.9823
190018 ...	10/01/91	09/30/92	1.2087	0.9754
190025 ...	10/01/91	09/30/92	1.2613	0.9865
190026 ...	10/01/91	09/30/92	1.3644	0.9983
190034 ...	01/01/92	12/31/92	1.2272	0.9833
190039 ...	01/01/92	12/31/92	1.4452	0.9989
190040 ...	10/01/91	09/30/92	1.3863	0.9970
190043 ...	01/01/92	12/31/92	1.1185	0.9737
190044 ...	10/01/91	09/30/92	1.1011	0.9816
190046 ...	01/01/92	12/31/92	1.4878	0.9988
190049 ...	01/01/92	12/31/92	1.0579	0.9698
190050 ...	11/01/91	10/31/92	1.0673	0.9704
190053 ...	12/01/91	11/30/92	1.1033	0.9586

TABLE 9.—1992 TRANSFER ADJUSTED CASE MIX INDEX AND TRANSFER ADJUSTMENT TO DISCHARGES FOR CAPITAL HOSPITAL-SPECIFIC RATE REDETERMINATIONS—Continued

Provider number	Cost reporting period		Transfer adjusted case mix index	Transfer adjustment to discharges
	Begin	End		
190059 ...	11/01/91	10/31/92	0.9268	0.9592
190060 ...	01/01/92	12/31/92	1.3562	0.9974
190064 ...	01/01/92	12/31/92	1.5056	0.9992
190065 ...	10/01/91	09/30/92	1.4938	0.9987
190077 ...	01/01/92	12/31/92	0.8843	0.9728
190078 ...	01/01/92	12/31/92	1.1095	0.9780
190079 ...	08/01/91	07/31/92	1.2667	0.9908
190083 ...	10/01/91	09/30/92	0.9985	0.9799
190088 ...	09/01/91	08/31/92	1.3225	0.9700
190089 ...	10/01/91	09/30/92	1.0742	0.9824
190090 ...	09/01/91	08/31/92	1.1936	0.9719
190092 ...	01/01/92	12/31/92	1.2913	0.9949
190095 ...	10/01/91	09/30/92	1.0647	0.9759
190099 ...	09/01/91	08/31/92	1.1681	0.9413
190102 ...	10/01/91	09/30/92	1.5027	0.9989
190106 ...	09/01/91	08/31/92	1.1105	0.9882
190109 ...	10/01/91	09/30/92	1.1055	0.9855
190111 ...	10/01/91	09/30/92	1.5395	0.9991
190113 ...	01/01/92	12/31/92	1.3169	0.9987
190115 ...	01/01/92	12/31/92	1.3402	0.9900
190116 ...	01/01/92	12/31/92	1.2083	0.9864
190118 ...	10/01/91	09/30/92	1.0449	0.9719
190120 ...	09/01/91	08/31/92	0.9466	0.9356
190125 ...	10/01/91	09/30/92	1.3803	0.9982
190127 ...	10/01/91	09/30/92	1.4316	0.9930
190128 ...	10/01/91	09/30/92	0.8899	0.9989
190130 ...	10/01/91	09/30/92	0.9644	0.9772
190134 ...	10/01/91	09/30/92	0.9962	0.9659
190135 ...	10/01/91	09/30/92	1.3419	0.9993
190136 ...	10/01/91	09/30/92	1.0370	0.9801
190142 ...	11/01/91	10/31/92	1.0040	0.9746
190144 ...	09/01/91	08/31/92	1.1023	0.9727
190145 ...	10/01/91	09/30/92	0.9551	0.9930
190146 ...	01/01/92	12/31/92	1.5225	0.9988
190147 ...	10/01/91	09/30/92	0.9833	0.9680
190149 ...	10/01/91	09/30/92	0.9600	0.9631
190151 ...	10/01/91	09/30/92	1.0749	0.9903
190160 ...	09/01/91	08/31/92	1.1375	0.9949
190162 ...	01/01/92	12/31/92	1.2284	0.9971
190164 ...	01/01/92	12/31/92	1.1532	0.9803
190167 ...	09/01/91	08/31/92	1.2722	0.9681
190175 ...	01/01/92	12/31/92	1.4899	1.0000
190177 ...	01/01/92	12/31/92	1.4639	0.9954
190178 ...	09/01/91	08/31/92	1.0023	0.9670
190184 ...	10/01/91	09/30/92	0.9391	0.9751
190185 ...	01/01/92	12/31/92	1.2147	0.9978
190186 ...	10/01/91	09/30/92	0.8742	0.9619
190189 ...	01/01/92	12/31/92	0.4785	0.8493
190191 ...	01/01/92	12/31/92	1.2426	0.9834
190193 ...	01/01/92	12/31/92	1.2415	0.9871
190194 ...	10/01/91	09/30/92	1.2374	0.9671
190197 ...	01/01/92	12/31/92	1.2454	0.9917
190198 ...	09/01/91	08/31/92	1.1440	0.9940
190200 ...	09/01/91	08/31/92	1.5160	0.9988
190201 ...	09/01/91	08/31/92	1.2723	0.9783
190202 ...	09/01/91	08/31/92	1.4200	0.9950
190203 ...	01/01/92	12/31/92	1.5751	0.9993
190205 ...	09/01/91	08/31/92	1.5557	0.9903
190206 ...	09/01/91	08/31/92	1.4407	0.9970
190207 ...	09/01/91	08/31/92	1.2051	0.9894
190208 ...	01/01/92	12/31/92	0.8497	0.9266
190211 ...	01/01/92	12/31/92	0.5891	0.8428
190212 ...	01/01/92	12/31/92	0.9245	0.5679
200001 ...	01/01/92	12/31/92	1.2469	0.9936
200006 ...	10/01/91	09/30/92	1.1295	0.9625
200007 ...	11/01/91	10/31/92	1.0878	0.9629
200009 ...	10/01/91	09/30/92	1.7036	0.9983
200017 ...	09/01/91	08/31/92	1.2635	0.9970
200018 ...	01/01/92	12/31/92	1.1575	0.9838
200021 ...	10/01/91	09/30/92	1.1731	0.9848
200025 ...	01/01/92	12/31/92	1.1401	0.9954
200026 ...	10/01/91	09/30/92	1.0001	0.9888
200027 ...	01/01/92	12/31/92	1.2005	0.9744

TABLE 9.—1992 TRANSFER ADJUSTED CASE MIX INDEX AND TRANSFER ADJUSTMENT TO DISCHARGES FOR CAPITAL HOSPITAL-SPECIFIC RATE REDETERMINATIONS—Continued

Provider number	Cost reporting period		Transfer adjusted case mix index	Transfer adjustment to discharges
	Begin	End		
200028 ...	12/01/91	11/30/92	1.0064	0.9834
200031 ...	01/01/92	12/31/92	1.2656	0.9916
200032 ...	01/01/92	12/31/92	1.2928	0.9765
200033 ...	09/29/91	09/26/92	1.6946	0.9969
200034 ...	01/01/92	12/31/92	1.1853	0.9883
200041 ...	01/01/92	12/31/92	1.1271	0.9870
200043 ...	01/01/92	12/31/92	0.6678	0.9889
200052 ...	10/01/91	09/30/92	1.0629	0.9908
200055 ...	01/01/92	12/31/92	1.0870	0.9635
200062 ...	01/01/92	12/31/92	0.9494	0.9802
200066 ...	10/01/91	09/30/92	1.2088	0.9803
210006 ...	01/01/92	12/31/92	1.1386	0.9910
210011 ...	01/01/92	12/31/92	1.2762	0.9923
210049 ...	01/01/92	12/31/92	1.1620	0.9849
220001 ...	10/01/91	09/30/92	1.1984	0.9902
220002 ...	10/01/91	09/30/92	1.3690	0.9979
220003 ...	10/01/91	09/30/92	1.1392	0.9857
220004 ...	10/01/91	09/30/92	1.2464	0.9905
220006 ...	10/01/91	09/30/92	1.3072	0.9925
220008 ...	10/01/91	09/30/92	1.1828	0.9852
220010 ...	10/01/91	09/30/92	1.1380	0.9901
220012 ...	10/01/91	09/30/92	1.2010	0.9796
220015 ...	10/01/91	09/30/92	1.2065	0.9920
220016 ...	10/01/91	09/30/92	1.2091	0.9878
220017 ...	10/01/91	09/30/92	1.2646	0.9946
220019 ...	10/01/91	09/30/92	1.0960	0.9902
220020 ...	10/01/91	09/30/92	1.1616	0.9911
220021 ...	10/01/91	09/30/92	1.2586	0.9919
220023 ...	10/01/91	09/30/92	1.1869	0.9976
220024 ...	10/01/91	09/30/92	1.1967	0.9929
220025 ...	10/01/91	09/30/92	1.1035	0.9848
220026 ...	10/01/91	09/30/92	1.3578	0.9939
220028 ...	10/01/91	09/30/92	1.3934	0.9975
220029 ...	10/01/91	09/30/92	1.1572	0.9843
220030 ...	10/01/91	09/30/92	1.1354	0.9747
220031 ...	09/29/91	09/26/92	1.6894	0.9968
220033 ...	10/01/91	09/30/92	1.2806	0.9942
220035 ...	10/01/91	09/30/92	1.2168	0.9935
220036 ...	10/01/91	09/30/92	1.5025	0.9974
220038 ...	10/01/91	09/30/92	1.2406	0.9750
220042 ...	10/01/91	09/30/92	1.1450	0.9853
220045 ...	10/01/91	09/30/92	1.2713	0.9920
220046 ...	10/01/91	09/30/92	1.3818	0.9943
220048 ...	10/01/91	09/30/92	1.2186	0.9938
220049 ...	10/01/91	09/30/92	1.2657	0.9815
220050 ...	10/01/91	09/30/92	0.9807	0.9817
220051 ...	10/01/91	09/30/92	1.1397	0.9948
220052 ...	10/01/91	09/30/92	1.2461	0.9887
220053 ...	10/01/91	09/30/92	1.2572	0.9912
220055 ...	10/01/91	09/30/92	1.1916	0.9915
220057 ...	10/01/91	09/30/92	1.2380	0.9893
220058 ...	10/01/91	09/30/92	1.0292	0.9794
220060 ...	10/01/91	09/30/92	1.1333	0.9839
220062 ...	10/01/91	09/30/92	0.8572	0.9941
220063 ...	10/01/91	09/30/92	1.1468	0.9919
220064 ...	10/01/91	09/30/92	1.1871	0.9883
220065 ...	10/01/91	09/30/92	1.2150	0.9801
220066 ...	10/01/91	09/30/92	1.2978	0.9964
220067 ...	10/01/91	09/30/92	1.2786	0.9889
220068 ...	10/01/91	09/30/92	0.6161	0.9861
220070 ...	10/01/91	09/30/92	1.1342	0.9865
220071 ...	10/01/91	09/30/92	1.8418	0.9979
220073 ...	10/01/91	09/30/92	1.2340	0.9920
220074 ...	10/01/91	09/30/92	1.2250	0.9891
220075 ...	10/01/91	09/30/92	0.7895	0.9917
220076 ...	10/01/91	09/30/92	1.2280	0.9854
220077 ...	10/01/91	09/30/92	1.6789	0.9988
220079 ...	10/01/91	09/30/92	1.1308	0.9924
220080 ...	10/01/91	09/30/92	1.1747	0.9901
220081 ...	10/01/91	09/30/92	1.0308	0.9692
220082 ...	10/01/91	09/30/92	1.2324	0.9934
220084 ...	10/01/91	09/30/92	1.2126	0.9757
220088 ...	10/01/91	09/30/92	1.4957	0.9909

TABLE 9.—1992 TRANSFER ADJUSTED CASE MIX INDEX AND TRANSFER ADJUSTMENT TO DISCHARGES FOR CAPITAL HOSPITAL-SPECIFIC RATE REDETERMINATIONS—Continued

Provider number	Cost reporting period		Transfer adjusted case mix index	Transfer adjustment to discharges
	Begin	End		
220089 ...	10/01/91	09/30/92	1.3113	0.9919
220090 ...	10/01/91	09/30/92	1.2079	0.9862
220092 ...	10/01/91	09/30/92	1.1752	0.9860
220094 ...	10/01/91	09/30/92	1.2495	0.9868
220095 ...	10/01/91	09/30/92	1.2031	0.9812
220097 ...	10/01/91	09/30/92	1.0291	0.9955
220098 ...	10/01/91	09/30/92	1.2588	0.9835
220099 ...	10/01/91	09/30/92	1.1048	0.9888
220100 ...	10/01/91	09/30/92	1.2249	0.9899
220101 ...	10/01/91	09/30/92	1.3777	0.9906
220102 ...	10/01/91	09/30/92	0.7578	1.0000
220104 ...	10/01/91	09/30/92	1.1878	0.9941
220105 ...	10/01/91	09/30/92	1.1476	0.9863
220106 ...	10/01/91	09/30/92	1.1174	0.9844
220107 ...	10/01/91	09/30/92	1.1528	0.9917
220108 ...	10/01/91	09/30/92	1.1357	0.9901
220110 ...	10/01/91	09/30/92	1.9376	0.9961
220111 ...	10/01/91	09/30/92	1.1625	0.9728
220116 ...	09/29/91	09/26/92	1.8300	0.9988
220118 ...	10/01/91	09/30/92	1.9805	0.9984
220119 ...	10/01/91	09/30/92	1.3088	0.9901
220120 ...	10/01/91	09/30/92	1.0368	0.9951
220123 ...	10/01/91	09/30/92	0.9678	0.9604
220126 ...	10/01/91	09/30/92	1.2545	0.9737
220128 ...	10/01/91	09/30/92	1.0910	0.9928
220135 ...	10/01/91	09/30/92	1.1400	0.9770
220156 ...	10/01/91	09/30/92	1.2594	0.9883
220162 ...	10/01/91	09/30/92	1.3541	0.7725
220171 ...	10/01/91	09/30/92	1.6567	0.9975
220173 ...	01/01/92	12/31/92	0.5473	1.0000
230003 ...	10/01/91	09/30/92	1.2065	0.9796
230007 ...	01/01/92	12/31/92	1.0945	0.9631
230012 ...	01/01/92	12/31/92	0.9131	1.0000
230013 ...	01/01/92	12/31/92	1.2310	0.9953
230015 ...	01/01/92	12/31/92	1.2925	0.9799
230017 ...	01/01/92	12/31/92	1.5435	0.9993
230020 ...	01/01/92	12/31/92	1.6515	0.9978
230021 ...	10/01/91	09/30/92	1.5927	0.9979
230022 ...	01/01/92	12/31/92	1.2723	0.9807
230040 ...	10/01/91	09/30/92	1.2920	0.9829
230042 ...	01/01/92	12/31/92	1.1099	0.9885
230053 ...	01/01/92	12/31/92	1.4739	0.9992
230055 ...	01/01/92	12/31/92	1.1953	0.9992
230056 ...	10/01/91	09/30/92	0.9340	0.9679
230063 ...	01/01/92	12/31/92	1.3248	0.9916
230065 ...	01/01/92	12/31/92	1.4576	0.9963
230071 ...	11/01/91	10/31/92	0.6333	0.9957
230076 ...	01/01/92	12/31/92	1.2402	0.9961
230078 ...	10/01/91	09/30/92	1.2544	0.9758
230080 ...	10/01/91	09/30/92	1.2833	0.9853
230087 ...	01/01/92	12/31/92	1.1028	0.9784
230089 ...	09/01/91	08/31/92	1.3433	0.9966
230090 ...	01/01/92	12/31/92	0.9141	0.9926
230096 ...	10/01/91	09/30/92	1.0657	0.9763
230101 ...	10/01/91	09/30/92	1.1356	0.9587
230103 ...	01/01/92	12/31/92	1.0245	0.9685
230105 ...	01/01/92	12/31/92	1.5897	0.9989
230107 ...	01/01/92	12/31/92	0.9123	0.9577
230110 ...	10/01/91	09/30/92	1.2529	0.9849
230114 ...	01/01/92	12/31/92	0.6452	1.0000
230115 ...	01/01/92	12/31/92	0.9945	0.9545
230118 ...	10/01/91	09/30/92	1.2669	0.9677
230119 ...	10/01/91	09/30/92	1.2351	0.9960
230121 ...	01/01/92	12/31/92	1.2709	0.9718
230122 ...	10/01/91	09/30/92	1.3250	0.9891
230125 ...	10/01/91	09/30/92	1.3442	0.9795
230128 ...	01/01/92	12/31/92	1.3140	0.9964
230129 ...	01/01/92	12/31/92	1.9552	0.9969
230130 ...	01/01/92	12/31/92	1.6129	0.9989
230134 ...	01/01/92	12/31/92	1.1985	0.9817
230135 ...	01/01/92	12/31/92	1.2813	0.9778
230137 ...	10/01/91	09/30/92	1.1514	0.9897
230138 ...	01/01/92	12/31/92	0.8695	1.0000

TABLE 9.—1992 TRANSFER ADJUSTED CASE MIX INDEX AND TRANSFER ADJUSTMENT TO DISCHARGES FOR CAPITAL HOSPITAL-SPECIFIC RATE REDETERMINATIONS—Continued

Provider number	Cost reporting period		Transfer adjusted case mix index	Transfer adjustment to discharges
	Begin	End		
230141 ...	10/01/91	09/30/92	1.5954	0.9976
230143 ...	01/01/92	12/31/92	1.2632	0.9813
230145 ...	10/01/91	09/30/92	1.1562	0.9704
230146 ...	01/01/92	12/31/92	1.2609	0.9772
230149 ...	01/01/92	12/31/92	1.1620	0.9607
230150 ...	10/01/91	09/30/92	1.3425	0.9976
230151 ...	01/01/92	12/31/92	1.3912	0.9830
230155 ...	01/01/92	12/31/92	1.0883	0.9573
230165 ...	07/07/91	07/04/92	1.7452	0.9990
230167 ...	01/01/92	12/31/92	1.2429	0.9922
230169 ...	10/01/91	09/30/92	1.3542	0.9938
230171 ...	01/01/92	12/31/92	1.0984	0.9872
230175 ...	10/01/91	09/30/92	1.0320	0.8987
230184 ...	10/01/91	09/30/92	1.1327	0.9865
230186 ...	01/01/92	12/31/92	1.0170	0.9873
230190 ...	01/01/92	12/31/92	1.2444	0.9517
230191 ...	01/01/92	12/31/92	0.9078	0.9670
230193 ...	01/01/92	12/31/92	1.3343	0.9883
230194 ...	01/01/92	12/31/92	1.2266	0.9662
230195 ...	10/01/91	09/30/92	1.3036	0.9821
230197 ...	10/01/91	09/30/92	1.2248	0.9944
230204 ...	10/01/91	09/30/92	1.3054	0.9944
230205 ...	10/01/91	09/30/92	1.0314	0.9384
230208 ...	01/01/92	12/31/92	1.1111	0.9786
230211 ...	01/01/92	12/31/92	0.9239	0.9789
230213 ...	01/01/92	12/31/92	1.0975	0.9745
230216 ...	01/01/92	12/31/92	1.3094	0.9909
230217 ...	01/01/92	12/31/92	1.1788	0.9721
230223 ...	01/01/92	12/31/92	1.3007	0.9882
230227 ...	01/01/92	12/31/92	1.4420	0.9963
230228 ...	01/01/92	12/31/92	1.2803	0.9918
230230 ...	01/01/92	12/31/92	1.3550	0.9906
230235 ...	01/01/92	12/31/92	0.9902	0.9660
230236 ...	10/01/91	09/30/92	1.3643	0.9947
230237 ...	10/01/91	09/30/92	1.1837	0.9953
230239 ...	10/01/91	09/30/92	1.1918	0.9659
230244 ...	10/01/91	09/30/92	1.3782	0.9899
230253 ...	10/01/91	09/30/92	1.0822	0.9513
230254 ...	01/01/92	12/31/92	1.2590	0.9888
230257 ...	07/07/91	07/04/92	1.1392	0.9825
230259 ...	01/01/92	12/31/92	1.1343	0.9816
230269 ...	01/01/92	12/31/92	1.2361	0.9923
230273 ...	01/01/92	12/31/92	1.5873	0.9982
230276 ...	01/01/92	12/31/92	1.0585	0.9951
230277 ...	01/01/92	12/31/92	1.1904	0.9832
240001 ...	01/01/92	12/31/92	1.5726	0.9976
240003 ...	09/01/91	08/31/92	1.2151	0.9769
240004 ...	01/01/92	12/31/92	1.4708	0.9849
240006 ...	01/01/92	12/31/92	1.1839	0.9566
240007 ...	10/01/91	09/30/92	1.0857	0.9597
240008 ...	10/01/91	09/30/92	1.0762	0.9692
240010 ...	01/01/92	12/31/92	1.9200	0.9956
240011 ...	10/01/91	09/30/92	1.0680	0.9747
240013 ...	10/01/91	09/30/92	1.2594	0.9717
240014 ...	01/01/92	12/31/92	1.0992	0.9501
240016 ...	10/01/91	09/30/92	1.3890	0.9685
240019 ...	01/01/92	12/31/92	1.3225	0.9913
240020 ...	10/01/91	09/30/92	1.2343	0.9685
240021 ...	10/01/91	09/30/92	1.0745	0.9375
240022 ...	01/01/92	12/31/92	1.1040	0.9548
240023 ...	01/01/92	12/31/92	1.1384	0.9591
240025 ...	01/01/92	12/31/92	1.1560	0.9688
240027 ...	10/01/91	09/30/92	1.0579	0.9677
240028 ...	10/01/91	09/30/92	1.0486	0.9685
240029 ...	10/01/91	09/30/92	1.1944	0.9724
240030 ...	01/01/92	12/31/92	1.3249	0.9806
240031 ...	01/01/92	12/31/92	0.9818	0.9229
240038 ...	01/01/92	12/31/92	1.4914	0.9968
240041 ...	10/01/91	09/30/92	1.1856	0.9829
240043 ...	01/01/92	12/31/92	1.2095	0.9691
240045 ...	10/01/91	09/30/92	1.0647	0.9624
240047 ...	01/01/92	12/31/92	1.4315	0.9951
240048 ...	09/01/91	08/31/92	1.2788	0.9910

TABLE 9.—1992 TRANSFER ADJUSTED CASE MIX INDEX AND TRANSFER ADJUSTMENT TO DISCHARGES FOR CAPITAL HOSPITAL-SPECIFIC RATE REDETERMINATIONS—Continued

Provider number	Cost reporting period		Transfer adjusted case mix index	Transfer adjustment to discharges
	Begin	End		
240050 ...	09/01/91	08/31/92	1.1119	0.9445
240051 ...	10/01/91	09/30/92	0.9179	0.9129
240052 ...	10/01/91	09/30/92	1.2130	0.9858
240056 ...	01/01/92	12/31/92	1.2814	0.9833
240057 ...	01/01/92	12/31/92	1.7262	0.9985
240058 ...	10/01/91	09/30/92	0.9881	0.9356
240059 ...	10/01/91	09/30/92	1.1391	0.9704
240061 ...	01/01/92	12/31/92	1.4921	0.9950
240063 ...	09/01/91	08/31/92	1.5005	0.9878
240064 ...	01/01/92	12/31/92	1.1961	0.9808
240066 ...	10/01/91	09/30/92	1.3461	0.9795
240069 ...	01/01/92	12/31/92	1.1361	0.9687
240071 ...	01/01/92	12/31/92	1.0950	0.9682
240072 ...	01/01/92	12/31/92	0.9816	0.9458
240073 ...	01/01/92	12/31/92	0.9735	0.9559
240076 ...	01/01/92	12/31/92	1.1524	0.9526
240078 ...	01/01/92	12/31/92	1.4048	0.9962
240079 ...	10/01/91	09/30/92	1.1003	0.9578
240080 ...	01/01/92	12/31/92	1.4249	0.9959
240082 ...	01/01/92	12/31/92	1.1917	0.9781
240083 ...	01/01/92	12/31/92	1.3343	0.9546
240084 ...	01/01/92	12/31/92	1.3348	0.9698
240085 ...	01/01/92	12/31/92	0.8743	0.9438
240086 ...	10/01/91	09/30/92	1.1526	0.9712
240087 ...	01/01/92	12/31/92	1.1004	0.9640
240088 ...	01/01/92	12/31/92	1.4575	0.9728
240091 ...	01/01/92	12/31/92	0.9426	0.9573
240093 ...	10/01/91	09/30/92	1.2976	0.9718
240094 ...	10/01/91	09/30/92	0.9545	0.9388
240096 ...	01/01/92	12/31/92	1.0863	0.9367
240097 ...	01/01/92	12/31/92	1.0696	0.9487
240098 ...	10/01/91	09/30/92	0.9608	0.9651
240100 ...	12/01/91	11/30/92	1.2673	0.9861
240102 ...	01/01/92	12/31/92	1.0124	0.9611
240103 ...	10/01/91	09/30/92	1.0727	0.9609
240105 ...	10/01/91	09/30/92	0.9027	0.9257
240106 ...	01/01/92	12/31/92	1.2745	0.9929
240107 ...	01/01/92	12/31/92	0.8651	0.9677
240108 ...	10/01/91	09/30/92	0.9306	0.9600
240109 ...	01/01/92	12/31/92	1.0045	0.9905
240111 ...	01/01/92	12/31/92	0.9985	0.9429
240112 ...	01/01/92	12/31/92	0.9589	0.9621
240114 ...	01/01/92	12/31/92	1.0315	0.9473
240115 ...	01/01/92	12/31/92	1.5328	0.9988
240116 ...	10/01/91	09/30/92	0.9108	0.9577
240117 ...	11/01/91	10/31/92	1.1021	0.9570
240119 ...	01/01/92	12/31/92	0.8378	0.9682
240121 ...	10/01/91	09/30/92	0.9623	0.9380
240122 ...	10/01/91	09/30/92	1.1262	0.9743
240123 ...	01/01/92	12/31/92	1.0794	0.9518
240124 ...	01/01/92	12/31/92	1.0050	0.9846
240127 ...	01/01/92	12/31/92	0.9501	0.9799
240128 ...	01/01/92	12/31/92	1.1485	0.9691
240130 ...	01/01/92	12/31/92	1.0219	0.9526
240132 ...	01/01/92	12/31/92	1.2348	0.9890
240133 ...	01/01/92	12/31/92	1.1015	0.9533
240135 ...	10/01/91	09/30/92	0.9245	0.8963
240136 ...	01/01/92	12/31/92	0.8765	0.9636
240138 ...	10/01/91	09/30/92	0.8496	0.9759
240139 ...	10/01/91	09/30/92	0.9835	0.9543
240140 ...	01/01/92	12/31/92	0.7435	0.9389
240141 ...	01/01/92	12/31/92	1.0071	0.9518
240142 ...	01/01/92	12/31/92	1.1435	0.9738
240143 ...	10/01/91	09/30/92	0.9003	0.8522
240144 ...	01/01/92	12/31/92	0.9796	0.9391
240146 ...	10/01/91	09/30/92	0.9287	0.9293
240148 ...	01/01/92	12/31/92	1.0056	0.9458
240150 ...	10/01/91	09/30/92	0.9541	0.9916
240152 ...	01/01/92	12/31/92	0.9577	0.9604
240153 ...	10/01/91	09/30/92	1.0245	0.9675
240154 ...	01/01/92	12/31/92	0.9623	0.9456
240155 ...	10/01/91	09/30/92	0.9382	0.9015
240157 ...	09/01/91	08/31/92	1.0534	0.9427

TABLE 9.—1992 TRANSFER ADJUSTED CASE MIX INDEX AND TRANSFER ADJUSTMENT TO DISCHARGES FOR CAPITAL HOSPITAL-SPECIFIC RATE REDETERMINATIONS—Continued

Provider number	Cost reporting period		Transfer adjusted case mix index	Transfer adjustment to discharges
	Begin	End		
240161 ...	10/01/91	09/30/92	0.9421	0.9745
240162 ...	01/01/92	12/31/92	1.0692	0.9568
240163 ...	01/01/92	12/31/92	0.9121	0.9630
240166 ...	10/01/91	09/30/92	1.0999	0.9552
240169 ...	01/01/92	12/31/92	0.9867	0.9593
240170 ...	01/01/92	12/31/92	1.0683	0.9849
240172 ...	01/01/92	12/31/92	1.0794	0.9295
240173 ...	01/01/92	12/31/92	0.9995	0.9739
240176 ...	10/01/91	09/30/92	0.9654	0.9823
240179 ...	01/01/92	12/31/92	1.0257	0.9732
240180 ...	01/01/92	12/31/92	0.9648	0.9552
240184 ...	10/01/91	09/30/92	0.9695	0.9972
240187 ...	01/01/92	12/31/92	1.2731	0.9732
240192 ...	01/01/92	12/31/92	0.9373	0.9726
240193 ...	10/01/91	09/30/92	1.0897	0.9776
240196 ...	01/01/92	12/31/92	0.6262	0.9983
240200 ...	01/01/92	12/31/92	0.8916	0.8915
240207 ...	01/01/92	12/31/92	1.2108	0.9779
240210 ...	09/01/91	08/31/92	1.2627	0.9827
240211 ...	10/01/91	09/30/92	0.9038	1.0000
250002 ...	10/01/91	09/30/92	0.7803	0.9667
250003 ...	10/01/91	09/30/92	0.9540	0.9448
250004 ...	10/01/91	09/30/92	1.4352	0.9979
250005 ...	10/01/91	09/30/92	0.9820	0.9613
250007 ...	10/01/91	09/30/92	1.2223	0.9960
250008 ...	10/01/91	09/30/92	0.9356	0.9785
250009 ...	10/01/91	09/30/92	1.1155	0.9864
250010 ...	10/01/91	09/30/92	1.0011	0.9583
250012 ...	01/01/92	12/31/92	0.8727	0.9572
250015 ...	10/01/91	09/30/92	0.9571	0.9651
250018 ...	10/01/91	09/30/92	0.9380	0.9661
250019 ...	10/01/91	09/30/92	1.3364	0.9981
250020 ...	10/01/91	09/30/92	1.0008	0.9699
250021 ...	10/01/91	09/30/92	0.8894	0.9289
250023 ...	10/01/91	09/30/92	0.7965	0.9660
250024 ...	10/01/91	09/30/92	0.8972	0.9464
250025 ...	10/01/91	09/30/92	1.0039	0.9670
250027 ...	10/01/91	09/30/92	0.9706	0.9509
250029 ...	01/01/92	12/31/92	0.9244	0.9401
250030 ...	01/01/92	12/31/92	0.9222	0.9646
250035 ...	10/01/91	09/30/92	0.8721	0.9567
250036 ...	10/01/91	09/30/92	1.0096	0.9668
250037 ...	10/01/91	09/30/92	0.8998	0.9377
250038 ...	10/01/91	09/30/92	0.8875	0.9686
250039 ...	10/01/91	09/30/92	0.9783	0.9603
250040 ...	10/01/91	09/30/92	1.1899	0.9938
250042 ...	10/01/91	09/30/92	1.1587	0.9839
250043 ...	10/01/91	09/30/92	0.8978	0.9220
250045 ...	10/01/91	09/30/92	1.1888	0.9583
250047 ...	10/01/91	09/30/92	0.8987	0.9541
250048 ...	01/01/92	12/31/92	1.3971	0.9990
250049 ...	10/01/91	09/30/92	0.9542	0.9811
250050 ...	10/01/91	09/30/92	1.2143	0.9790
250051 ...	10/01/91	09/30/92	0.9089	0.9434
250057 ...	10/01/91	09/30/92	1.1396	0.9730
250058 ...	10/01/91	09/30/92	1.1727	0.9897
250059 ...	10/01/91	09/30/92	1.0619	0.9597
250060 ...	10/01/91	09/30/92	0.7875	0.9726
250061 ...	10/01/91	09/30/92	0.8895	0.9763
250062 ...	01/01/92	12/31/92	0.9767	0.9401
250063 ...	10/01/91	09/30/92	0.8602	0.9663
250065 ...	10/01/91	09/30/92	0.8908	0.9629
250066 ...	10/01/91	09/30/92	0.9760	0.9659
250067 ...	10/01/91	09/30/92	0.9737	0.9694
250068 ...	10/01/91	09/30/92	0.8589	0.9838
250069 ...	01/01/92	12/31/92	1.2278	0.9972
250071 ...	10/01/91	09/30/92	1.0951	0.9403
250073 ...	01/01/92	12/31/92	0.9778	0.9603
250076 ...	10/01/91	09/30/92	0.9230	0.9253
250077 ...	10/01/91	09/30/92	0.9401	0.9751
250078 ...	10/01/91	09/30/92	1.3963	0.9975
250079 ...	10/01/91	09/30/92	0.8692	0.9813
250081 ...	10/01/91	09/30/92	1.2434	0.9969

TABLE 9.—1992 TRANSFER ADJUSTED CASE MIX INDEX AND TRANSFER ADJUSTMENT TO DISCHARGES FOR CAPITAL HOSPITAL-SPECIFIC RATE REDETERMINATIONS—Continued

Provider number	Cost reporting period		Transfer adjusted case mix index	Transfer adjustment to discharges
	Begin	End		
250082 ...	10/01/91	09/30/92	1.2044	0.9899
250083 ...	01/01/92	12/31/92	0.9217	0.9662
250084 ...	10/01/91	09/30/92	1.1612	0.9915
250085 ...	10/01/91	09/30/92	1.0603	0.9530
250086 ...	10/01/91	09/30/92	0.9966	0.9636
250088 ...	10/01/91	09/30/92	1.0319	0.9669
250089 ...	01/01/92	12/31/92	1.0457	0.9764
250091 ...	10/01/91	09/30/92	0.9527	0.9765
250093 ...	10/01/91	09/30/92	1.1745	0.9862
250095 ...	10/01/91	09/30/92	1.0040	0.9775
250096 ...	10/01/91	09/30/92	1.1610	0.9885
250097 ...	10/01/91	09/30/92	1.1902	0.9785
250098 ...	10/01/91	09/30/92	0.8662	0.9619
250099 ...	10/01/91	09/30/92	1.2299	0.9885
250100 ...	10/01/91	09/30/92	1.2292	0.9851
250101 ...	10/01/91	09/30/92	0.8567	0.9522
250104 ...	10/01/91	09/30/92	1.3724	0.9988
250105 ...	10/01/91	09/30/92	0.9287	0.9752
250107 ...	10/01/91	09/30/92	0.9945	0.9698
250109 ...	10/01/91	09/30/92	0.9359	0.9505
250112 ...	10/01/91	09/30/92	1.0196	0.9348
250117 ...	01/01/92	12/31/92	1.1059	0.9752
250120 ...	10/01/91	09/30/92	1.0260	0.9925
250122 ...	09/01/91	08/31/92	1.2345	0.9927
250124 ...	01/01/92	12/31/92	0.9016	0.9700
250125 ...	01/01/92	12/31/92	1.2873	0.9887
250136 ...	01/01/92	12/31/92	0.7427	0.9726
250139 ...	10/01/91	09/30/92	0.7701	0.9380
250140 ...	10/01/91	09/30/92	0.9044	0.9795
260003 ...	09/01/91	08/31/92	0.9593	0.9721
260004 ...	01/01/92	12/31/92	1.0369	0.9838
260005 ...	01/01/92	12/31/92	1.4875	0.9942
260011 ...	01/01/92	12/31/92	1.5699	0.9965
260012 ...	10/01/91	09/30/92	1.0054	0.9745
260014 ...	01/01/92	12/31/92	1.6686	0.9986
260015 ...	01/01/92	12/31/92	1.1861	0.9489
260017 ...	01/01/92	12/31/92	1.2034	0.9698
260018 ...	10/01/91	09/30/92	1.0014	0.9617
260019 ...	01/01/92	12/31/92	0.9880	0.9552
260021 ...	10/01/91	09/30/92	1.3035	0.9901
260023 ...	10/01/91	09/30/92	1.2377	0.9966
260024 ...	12/01/91	11/30/92	1.0652	0.9779
260025 ...	10/01/91	09/30/92	1.2761	0.9826
260027 ...	01/01/92	12/31/92	1.5441	0.9988
260029 ...	10/01/91	09/30/92	1.1874	0.9797
260030 ...	10/01/91	09/30/92	1.1647	0.9724
260032 ...	01/01/92	12/31/92	1.6931	0.9984
260034 ...	01/01/92	12/31/92	1.0835	0.9870
260035 ...	12/01/91	11/30/92	1.1394	0.9833
260036 ...	01/01/92	12/31/92	1.0509	0.9616
260039 ...	09/01/91	08/31/92	1.2131	0.9819
260040 ...	10/01/91	09/30/92	1.4589	0.9994
260044 ...	01/01/92	12/31/92	1.0590	0.9703
260050 ...	01/01/92	12/31/92	1.0883	0.9690
260053 ...	10/01/91	09/30/92	1.1145	0.9860
260054 ...	01/01/92	12/31/92	1.3079	0.9934
260057 ...	10/01/91	09/30/92	1.2519	0.9726
260062 ...	10/01/91	09/30/92	1.1708	0.9939
260063 ...	01/01/92	12/31/92	1.1619	0.9708
260064 ...	01/01/92	12/31/92	1.3863	0.9876
260068 ...	01/01/92	12/31/92	1.8099	0.9992
260070 ...	01/01/92	12/31/92	1.1446	0.9272
260073 ...	01/01/92	12/31/92	1.0471	0.9822
260074 ...	01/01/92	12/31/92	1.1757	0.9644
260078 ...	01/01/92	12/31/92	1.1413	0.9783
260080 ...	09/01/91	08/31/92	1.1236	0.9281
260091 ...	01/01/92	12/31/92	1.6048	0.9969
260092 ...	01/01/92	12/31/92	1.0697	0.9696
260097 ...	10/01/91	09/30/92	1.1981	0.9723
260100 ...	10/01/91	09/30/92	1.0344	0.9744
260102 ...	01/01/92	12/31/92	1.0157	0.9569
260103 ...	01/01/92	12/31/92	1.3422	0.9895
260107 ...	10/01/91	09/30/92	1.3324	0.9995

TABLE 9.—1992 TRANSFER ADJUSTED CASE MIX INDEX AND TRANSFER ADJUSTMENT TO DISCHARGES FOR CAPITAL HOSPITAL-SPECIFIC RATE REDETERMINATIONS—Continued

Provider number	Cost reporting period		Transfer adjusted case mix index	Transfer adjustment to discharges
	Begin	End		
260110 ...	01/01/92	12/31/92	1.6302	0.9974
260111 ...	01/01/92	12/31/92	0.9557	0.9753
260113 ...	10/01/91	09/30/92	1.1696	0.9861
260116 ...	01/01/92	12/31/92	1.1936	0.9828
260119 ...	01/01/92	12/31/92	1.2028	0.9715
260120 ...	12/01/91	11/30/92	1.2829	0.9772
260122 ...	11/01/91	10/31/92	1.2405	0.9721
260123 ...	01/01/92	12/31/92	0.9558	0.9849
260134 ...	01/01/92	12/31/92	1.2512	0.9787
260138 ...	01/01/92	12/31/92	1.8797	0.9996
260158 ...	01/01/92	12/31/92	1.0516	0.9646
260159 ...	01/01/92	12/31/92	1.1499	0.9694
260160 ...	01/01/92	12/31/92	1.1313	0.9710
260162 ...	01/01/92	12/31/92	1.0940	0.9873
260166 ...	01/01/92	12/31/92	1.2167	0.9868
260178 ...	01/01/92	12/31/92	1.5329	0.9956
260179 ...	01/01/92	12/31/92	1.5160	0.9983
260180 ...	01/01/92	12/31/92	1.5702	0.9978
260188 ...	01/01/92	12/31/92	1.3697	0.9890
260190 ...	01/01/92	12/31/92	1.1763	0.9866
260191 ...	01/01/92	12/31/92	1.2143	0.9854
260193 ...	01/01/92	12/31/92	1.2730	0.9714
260195 ...	09/27/91	09/24/92	1.1093	0.9747
260200 ...	01/01/92	12/31/92	1.1985	0.9728
260202 ...	10/01/91	09/30/92	1.2509	0.9801
270002 ...	10/01/91	09/30/92	1.2247	0.9732
270006 ...	10/01/91	09/30/92	0.8924	0.9845
270007 ...	10/01/91	09/30/92	1.0801	0.9868
270013 ...	01/01/92	12/31/92	1.2590	0.9860
270014 ...	01/01/92	12/31/92	1.6577	0.9985
270019 ...	01/01/92	12/31/92	0.9039	0.9558
270021 ...	10/01/91	09/30/92	1.1490	0.9926
270030 ...	01/01/92	12/31/92	0.9911	0.8875
270033 ...	01/01/92	12/31/92	0.9241	0.9423
270035 ...	10/01/91	09/30/92	0.9990	0.9824
270039 ...	01/01/92	12/31/92	0.9643	0.9698
270048 ...	11/01/91	10/31/92	1.0713	0.9689
270057 ...	01/01/92	12/31/92	1.1468	0.9792
270059 ...	11/01/91	10/31/92	0.9055	0.9594
270063 ...	10/01/91	09/30/92	0.8684	0.9511
270083 ...	01/01/92	12/31/92	1.0911	0.9285
270084 ...	01/01/92	12/31/92	0.8999	0.9536
280001 ...	10/01/91	09/30/92	1.0432	0.9699
280005 ...	09/01/91	08/31/92	1.4483	0.9946
280012 ...	01/01/92	12/31/92	1.1867	0.9824
280015 ...	10/01/91	09/30/92	0.9757	0.9788
280017 ...	08/01/91	07/31/92	1.1650	0.9751
280025 ...	09/01/91	08/31/92	0.9820	0.9809
280030 ...	09/01/91	08/31/92	1.8652	0.9994
280031 ...	10/01/91	09/30/92	1.0286	0.9654
280032 ...	01/01/92	12/31/92	1.2210	0.9874
280034 ...	09/01/91	08/31/92	1.2515	0.9829
280038 ...	10/01/91	09/30/92	1.0472	0.9689
280039 ...	10/01/91	09/30/92	1.1303	0.9487
280040 ...	01/01/92	12/31/92	1.5880	0.9977
280041 ...	01/01/92	12/31/92	1.0241	0.9710
280046 ...	01/01/92	12/31/92	0.9620	0.9918
280047 ...	01/01/92	12/31/92	1.1664	0.9847
280048 ...	10/01/91	09/30/92	1.1116	0.9965
280054 ...	10/01/91	09/30/92	1.2239	0.9591
280057 ...	10/01/91	09/30/92	1.0348	0.9741
280058 ...	10/01/91	09/30/92	1.1163	0.9726
280061 ...	01/01/92	12/31/92	1.3253	0.9866
280065 ...	01/01/92	12/31/92	1.1640	0.9888
280074 ...	10/01/91	09/30/92	1.1211	0.9663
280076 ...	08/01/91	07/31/92	0.9954	0.9674
280079 ...	08/01/91	07/31/92	0.9971	0.9871
280081 ...	10/01/91	09/30/92	1.4976	0.9965
280083 ...	11/01/91	10/31/92	0.9455	0.9659
280085 ...	01/01/92	12/31/92	0.8957	0.9824
280088 ...	09/23/91	09/20/92	1.6805	0.9995
280089 ...	10/01/91	09/30/92	1.0631	0.9934
280101 ...	10/01/91	09/30/92	1.0974	0.9842

TABLE 9.—1992 TRANSFER ADJUSTED CASE MIX INDEX AND TRANSFER ADJUSTMENT TO DISCHARGES FOR CAPITAL HOSPITAL-SPECIFIC RATE REDETERMINATIONS—Continued

Provider number	Cost reporting period		Transfer adjusted case mix index	Transfer adjustment to discharges
	Begin	End		
280102 ...	01/01/92	12/31/92	0.8610	0.9195
280106 ...	08/01/91	07/31/92	1.1155	0.9691
280107 ...	11/01/91	10/31/92	0.9711	0.9817
280108 ...	01/01/92	12/31/92	1.0796	0.9856
280109 ...	08/01/91	07/31/92	0.8282	0.9615
280114 ...	08/01/91	07/31/92	0.9586	0.9877
280115 ...	01/01/92	12/31/92	1.0496	0.9757
290003 ...	09/01/91	08/31/92	1.6898	0.9987
290005 ...	09/01/91	08/31/92	1.1696	0.9923
290006 ...	01/01/92	12/31/92	1.0168	0.9637
290009 ...	01/01/92	12/31/92	1.5005	0.9968
290010 ...	01/01/92	12/31/92	1.1176	0.9748
290018 ...	10/01/91	09/30/92	0.9006	0.9861
290021 ...	01/01/92	12/31/92	1.5395	0.9971
290022 ...	10/01/91	09/30/92	1.6419	0.9991
290032 ...	01/01/92	12/31/92	1.3675	0.9818
300001 ...	10/01/91	09/30/92	1.2799	0.9950
300005 ...	10/01/91	09/30/92	1.2861	0.9918
300006 ...	10/01/91	09/30/92	1.1213	0.9565
300007 ...	10/01/91	09/30/92	1.1247	0.9690
300008 ...	10/01/91	09/30/92	1.2693	0.9859
300009 ...	10/01/91	09/30/92	1.1572	0.9632
300011 ...	01/01/92	12/31/92	1.2570	0.9871
300012 ...	10/01/91	09/30/92	1.3394	0.9871
300013 ...	10/01/91	09/30/92	1.2277	0.9897
300014 ...	10/01/91	09/30/92	1.3041	0.9871
300016 ...	10/01/91	09/30/92	1.2606	0.9864
300017 ...	08/01/91	07/31/92	1.2127	0.9761
300018 ...	01/01/92	12/31/92	1.2103	0.9941
300020 ...	10/01/91	09/30/92	1.2471	0.9920
300021 ...	10/01/91	09/30/92	1.1725	0.9868
300022 ...	01/01/92	12/31/92	1.0940	0.9737
300023 ...	10/01/91	09/30/92	1.2469	0.9844
300024 ...	10/01/91	09/30/92	1.2039	0.9772
300028 ...	10/01/91	09/30/92	1.1005	0.9726
300033 ...	10/01/91	09/30/92	1.0460	0.9713
310001 ...	01/01/92	12/31/92	1.6997	0.9994
310002 ...	01/01/92	12/31/92	1.8497	0.9988
310003 ...	01/01/92	12/31/92	1.2653	0.9949
310005 ...	01/01/92	12/31/92	1.2268	0.9879
310006 ...	01/01/92	12/31/92	1.2061	0.9943
310008 ...	01/01/92	12/31/92	1.2944	0.9948
310009 ...	01/01/92	12/31/92	1.1564	0.9955
310010 ...	01/01/92	12/31/92	1.2714	0.9935
310011 ...	01/01/92	12/31/92	1.2411	0.9844
310012 ...	01/01/92	12/31/92	1.5827	0.9988
310013 ...	01/01/92	12/31/92	1.2836	0.9950
310014 ...	01/01/92	12/31/92	1.5492	0.9978
310015 ...	01/01/92	12/31/92	1.7109	0.9990
310016 ...	01/01/92	12/31/92	1.2410	0.9957
310017 ...	01/01/92	12/31/92	1.3421	0.9917
310018 ...	01/01/92	12/31/92	1.2392	0.9950
310019 ...	01/01/92	12/31/92	1.6755	0.9987
310020 ...	01/01/92	12/31/92	1.2396	0.9952
310021 ...	01/01/92	12/31/92	1.2729	0.9943
310022 ...	01/01/92	12/31/92	1.2160	0.9933
310024 ...	01/01/92	12/31/92	1.2406	0.9906
310025 ...	01/01/92	12/31/92	1.1817	0.9902
310026 ...	01/01/92	12/31/92	1.2971	0.9973
310027 ...	01/01/92	12/31/92	1.2847	0.9961
310028 ...	01/01/92	12/31/92	1.1591	0.9786
310029 ...	01/01/92	12/31/92	1.7776	0.9972
310031 ...	01/01/92	12/31/92	2.5415	0.9980
310032 ...	01/01/92	12/31/92	1.2594	0.9909
310034 ...	01/01/92	12/31/92	1.2332	0.9939
310036 ...	01/01/92	12/31/92	1.2269	0.9925
310037 ...	01/01/92	12/31/92	1.2193	0.9923
310038 ...	01/01/92	12/31/92	1.7697	0.9980
310039 ...	01/01/92	12/31/92	1.2935	0.9957
310040 ...	01/01/92	12/31/92	1.2163	0.9969
310041 ...	01/01/92	12/31/92	1.2614	0.9959
310042 ...	01/01/92	12/31/92	1.1912	0.9996
310043 ...	01/01/92	12/31/92	1.2329	0.9975

TABLE 9.—1992 TRANSFER ADJUSTED CASE MIX INDEX AND TRANSFER ADJUSTMENT TO DISCHARGES FOR CAPITAL HOSPITAL-SPECIFIC RATE REDETERMINATIONS—Continued

Provider number	Cost reporting period		Transfer adjusted case mix index	Transfer adjustment to discharges
	Begin	End		
310044 ...	01/01/92	12/31/92	1.2654	0.9912
310045 ...	01/01/92	12/31/92	1.2949	0.9983
310047 ...	01/01/92	12/31/92	1.2757	0.9883
310048 ...	01/01/92	12/31/92	1.2485	0.9940
310049 ...	01/01/92	12/31/92	1.3287	0.9974
310050 ...	10/01/91	09/30/92	1.1790	0.9939
310051 ...	01/01/92	12/31/92	1.2673	0.9964
310052 ...	01/01/92	12/31/92	1.2019	0.9964
310054 ...	01/01/92	12/31/92	1.2595	0.9967
310056 ...	01/01/92	12/31/92	1.1734	0.9869
310057 ...	01/01/92	12/31/92	1.2689	0.9913
310058 ...	01/01/92	12/31/92	1.1678	0.9976
310060 ...	01/01/92	12/31/92	1.1739	0.9923
310061 ...	01/01/92	12/31/92	1.1984	0.9872
310062 ...	01/01/92	12/31/92	1.3227	0.9981
310063 ...	01/01/92	12/31/92	1.3434	0.9957
310064 ...	01/01/92	12/31/92	1.2427	0.9896
310067 ...	01/01/92	12/31/92	1.2509	0.9917
310069 ...	01/01/92	12/31/92	1.1773	0.9854
310070 ...	01/01/92	12/31/92	1.2868	0.9961
310072 ...	01/01/92	12/31/92	1.2285	0.9845
310073 ...	01/01/92	12/31/92	1.4494	0.9976
310074 ...	01/01/92	12/31/92	1.3024	0.9912
310075 ...	01/01/92	12/31/92	1.3066	0.9952
310076 ...	01/01/92	12/31/92	1.3200	0.9975
310077 ...	01/01/92	12/31/92	1.6279	0.9983
310078 ...	01/01/92	12/31/92	1.2270	0.9978
310081 ...	01/01/92	12/31/92	1.2380	0.9908
310083 ...	01/01/92	12/31/92	1.2775	0.9959
310084 ...	01/01/92	12/31/92	1.2199	0.9934
310085 ...	01/01/92	12/31/92	1.2084	0.9937
310086 ...	01/01/92	12/31/92	1.2069	0.9913
310087 ...	01/01/92	12/31/92	1.2115	0.9845
310088 ...	01/01/92	12/31/92	1.1564	0.9825
310090 ...	01/01/92	12/31/92	1.1942	0.9924
310091 ...	01/01/92	12/31/92	1.2336	0.9790
310092 ...	01/01/92	12/31/92	1.3530	0.9962
310093 ...	01/01/92	12/31/92	1.1591	0.9920
310096 ...	01/01/92	12/31/92	1.9002	0.9993
310105 ...	01/01/92	12/31/92	1.2171	0.9866
310108 ...	01/01/92	12/31/92	1.3307	0.9947
310110 ...	01/01/92	12/31/92	1.2014	0.9959
310111 ...	01/01/92	12/31/92	1.2861	0.9934
310112 ...	01/01/92	12/31/92	1.2403	0.9973
310113 ...	01/01/92	12/31/92	1.2347	0.9881
310115 ...	01/01/92	12/31/92	1.1457	0.9952
310116 ...	01/01/92	12/31/92	1.2471	0.9961
310118 ...	10/01/91	09/30/92	1.2513	0.9976
310120 ...	01/01/92	12/31/92	1.1088	0.9930
310121 ...	01/01/92	12/31/92	1.1830	0.9696
320019 ...	09/01/91	08/31/92	1.4757	0.9977
320035 ...	01/01/92	12/31/92	1.1760	0.9783
320038 ...	09/01/91	08/31/92	1.2418	0.9612
320063 ...	09/01/91	08/31/92	1.2920	0.9765
320067 ...	01/01/92	12/31/92	0.8450	0.9680
330001 ...	01/01/92	12/31/92	1.1625	0.9901
330002 ...	01/01/92	12/31/92	1.4424	0.9977
330003 ...	01/01/92	12/31/92	1.2954	0.9976
330004 ...	01/01/92	12/31/92	1.3585	0.9950
330005 ...	01/01/92	12/31/92	1.7356	0.9988
330006 ...	01/01/92	12/31/92	1.3471	0.9957
330007 ...	01/01/92	12/31/92	1.3378	0.9962
330008 ...	01/01/92	12/31/92	1.1859	0.9868
330009 ...	01/01/92	12/31/92	1.2959	0.9978
330010 ...	01/01/92	12/31/92	1.1855	0.9931
330011 ...	01/01/92	12/31/92	1.1903	0.9938
330012 ...	01/01/92	12/31/92	1.6053	0.9964
330013 ...	01/01/92	12/31/92	2.0557	0.9975
330014 ...	01/01/92	12/31/92	1.4840	0.9886
330016 ...	01/01/92	12/31/92	1.0202	0.9721
330019 ...	01/01/92	12/31/92	1.2732	0.9943
330020 ...	01/01/92	12/31/92	1.0648	0.9891
330023 ...	01/01/92	12/31/92	1.1846	0.9899

TABLE 9.—1992 TRANSFER ADJUSTED CASE MIX INDEX AND TRANSFER ADJUSTMENT TO DISCHARGES FOR CAPITAL HOSPITAL-SPECIFIC RATE REDETERMINATIONS—Continued

Provider number	Cost reporting period		Transfer adjusted case mix index	Transfer adjustment to discharges
	Begin	End		
330024 ...	01/01/92	12/31/92	1.8013	0.9998
330025 ...	01/01/92	12/31/92	1.0709	0.9894
330027 ...	01/01/92	12/31/92	1.4942	0.9905
330028 ...	01/01/92	12/31/92	1.3303	0.9950
330029 ...	01/01/92	12/31/92	1.1114	0.9950
330030 ...	01/01/92	12/31/92	1.1674	0.9860
330033 ...	01/01/92	12/31/92	1.1601	0.9669
330034 ...	01/01/92	12/31/92	1.0494	0.9910
330036 ...	01/01/92	12/31/92	1.1736	0.9964
330037 ...	01/01/92	12/31/92	1.0631	0.9904
330038 ...	01/01/92	12/31/92	1.1532	0.9878
330039 ...	01/01/92	12/31/92	0.8611	0.9739
330041 ...	01/01/92	12/31/92	1.3579	0.9981
330043 ...	01/01/92	12/31/92	1.2634	0.9918
330044 ...	01/01/92	12/31/92	1.1813	0.9928
330045 ...	01/01/92	12/31/92	1.3783	0.9931
330046 ...	01/01/92	12/31/92	1.5554	0.9976
330047 ...	01/01/92	12/31/92	1.2506	0.9882
330048 ...	01/01/92	12/31/92	1.2242	0.9919
330049 ...	01/01/92	12/31/92	1.2714	0.9904
330053 ...	01/01/92	12/31/92	1.0702	0.9919
330055 ...	01/01/92	12/31/92	1.3805	0.9934
330056 ...	01/01/92	12/31/92	1.4338	0.9967
330057 ...	01/01/92	12/31/92	1.6471	0.9978
330058 ...	01/01/92	12/31/92	1.2994	0.9938
330059 ...	01/01/92	12/31/92	1.4774	0.9991
330061 ...	01/01/92	12/31/92	1.3460	0.9945
330062 ...	01/01/92	12/31/92	1.0877	0.9769
330064 ...	01/01/92	12/31/92	1.3396	0.9986
330065 ...	01/01/92	12/31/92	1.1680	0.9937
330066 ...	01/01/92	12/31/92	1.2485	0.9955
330067 ...	01/01/92	12/31/92	1.3153	0.9855
330072 ...	01/01/92	12/31/92	1.3479	0.9959
330073 ...	01/01/92	12/31/92	1.1897	0.9892
330074 ...	01/01/92	12/31/92	1.2462	0.9902
330075 ...	01/01/92	12/31/92	1.0599	0.9894
330078 ...	01/01/92	12/31/92	1.3716	0.9980
330079 ...	01/01/92	12/31/92	1.1660	0.9896
330082 ...	01/01/92	12/31/92	1.2104	0.9921
330084 ...	01/01/92	12/31/92	0.9685	0.9852
330085 ...	01/01/92	12/31/92	1.3685	0.9919
330086 ...	01/01/92	12/31/92	1.3094	0.9959
330088 ...	01/01/92	12/31/92	1.0924	0.9788
330090 ...	01/01/92	12/31/92	1.7046	0.9960
330091 ...	01/01/92	12/31/92	1.3586	0.9955
330092 ...	01/01/92	12/31/92	1.0315	0.9784
330094 ...	01/01/92	12/31/92	1.2037	0.9830
330095 ...	01/01/92	12/31/92	1.2444	0.9982
330097 ...	01/01/92	12/31/92	1.2034	0.9848
330100 ...	01/01/92	12/31/92	0.6796	0.9974
330101 ...	01/01/92	12/31/92	1.6524	0.9970
330102 ...	01/01/92	12/31/92	1.3112	0.9974
330103 ...	01/01/92	12/31/92	1.2047	0.9815
330104 ...	01/01/92	12/31/92	1.3418	0.9951
330106 ...	01/01/92	12/31/92	1.5912	0.9993
330107 ...	01/01/92	12/31/92	1.1950	0.9839
330108 ...	01/01/92	12/31/92	1.2092	0.9925
330111 ...	01/01/92	12/31/92	1.1360	0.9806
330114 ...	01/01/92	12/31/92	0.9748	0.9784
330115 ...	01/01/92	12/31/92	1.2699	0.9834
330116 ...	01/01/92	12/31/92	0.9466	0.9456
330118 ...	01/01/92	12/31/92	1.5841	0.9968
330119 ...	01/01/92	12/31/92	1.6307	0.9988
330121 ...	01/01/92	12/31/92	0.9720	0.9658
330122 ...	01/01/92	12/31/92	1.3167	0.9945
330125 ...	01/01/92	12/31/92	1.7546	0.9976
330126 ...	01/01/92	12/31/92	1.1731	0.9917
330132 ...	01/01/92	12/31/92	1.1881	0.9766
330133 ...	01/01/92	12/31/92	1.3016	0.9964
330135 ...	01/01/92	12/31/92	1.2544	0.9782
330136 ...	01/01/92	12/31/92	1.2578	0.9933
330140 ...	01/01/92	12/31/92	1.6783	0.9996
330141 ...	01/01/92	12/31/92	1.2982	0.9962

TABLE 9.—1992 TRANSFER ADJUSTED CASE MIX INDEX AND TRANSFER ADJUSTMENT TO DISCHARGES FOR CAPITAL HOSPITAL-SPECIFIC RATE REDETERMINATIONS—Continued

Provider number	Cost reporting period		Transfer adjusted case mix index	Transfer adjustment to discharges
	Begin	End		
330144 ...	01/01/92	12/31/92	1.0131	0.9810
330148 ...	01/01/92	12/31/92	0.9951	0.9706
330151 ...	01/01/92	12/31/92	1.0967	0.9767
330152 ...	01/01/92	12/31/92	1.4173	0.9963
330153 ...	01/01/92	12/31/92	1.5776	0.9954
330154 ...	01/01/92	12/31/92	1.4514	0.9989
330157 ...	01/01/92	12/31/92	1.2577	0.9944
330158 ...	01/01/92	12/31/92	1.3111	0.9944
330159 ...	01/01/92	12/31/92	1.3192	0.9953
330160 ...	01/01/92	12/31/92	1.4567	0.9968
330161 ...	01/01/92	12/31/92	0.9522	0.9981
330162 ...	01/01/92	12/31/92	1.2996	0.9918
330163 ...	01/01/92	12/31/92	1.1442	0.9910
330164 ...	01/01/92	12/31/92	1.3646	0.9945
330166 ...	01/01/92	12/31/92	0.9329	0.9696
330167 ...	01/01/92	12/31/92	1.5331	0.9986
330169 ...	01/01/92	12/31/92	1.3841	0.9968
330171 ...	01/01/92	12/31/92	1.2977	0.9966
330175 ...	01/01/92	12/31/92	1.0771	0.9937
330179 ...	01/01/92	12/31/92	0.8890	0.9815
330180 ...	01/01/92	12/31/92	1.1933	0.9958
330181 ...	01/01/92	12/31/92	1.2740	0.9939
330182 ...	01/01/92	12/31/92	2.3619	0.9987
330183 ...	01/01/92	12/31/92	1.3509	0.9955
330184 ...	01/01/92	12/31/92	1.3151	0.9935
330185 ...	01/01/92	12/31/92	1.1968	0.9909
330186 ...	01/01/92	12/31/92	1.0760	0.9847
330188 ...	01/01/92	12/31/92	1.2259	0.9953
330189 ...	01/01/92	12/31/92	0.8364	1.0000
330191 ...	01/01/92	12/31/92	1.2482	0.9971
330193 ...	01/01/92	12/31/92	1.3500	0.9968
330194 ...	01/01/92	12/31/92	1.7910	0.9981
330195 ...	01/01/92	12/31/92	1.5769	0.9986
330197 ...	01/01/92	12/31/92	1.0413	0.9820
330198 ...	01/01/92	12/31/92	1.3714	0.9951
330201 ...	01/01/92	12/31/92	1.4678	0.9994
330203 ...	01/01/92	12/31/92	1.3755	0.9987
330205 ...	01/01/92	12/31/92	1.1507	0.9822
330208 ...	01/01/92	12/31/92	1.1943	0.9933
330209 ...	01/01/92	12/31/92	1.2446	0.9829
330211 ...	01/01/92	12/31/92	1.1607	0.9876
330212 ...	01/01/92	12/31/92	1.1982	0.9963
330213 ...	01/01/92	12/31/92	1.0779	0.9706
330214 ...	01/01/92	12/31/92	1.6805	0.9994
330215 ...	01/01/92	12/31/92	1.1896	0.9895
330218 ...	01/01/92	12/31/92	1.2769	0.9885
330219 ...	01/01/92	12/31/92	1.5206	0.9978
330221 ...	01/01/92	12/31/92	1.2242	0.9947
330222 ...	01/01/92	12/31/92	1.2172	0.9746
330223 ...	01/01/92	12/31/92	1.0544	0.9622
330224 ...	01/01/92	12/31/92	1.2362	0.9929
330225 ...	01/01/92	12/31/92	1.2320	0.9959
330226 ...	01/01/92	12/31/92	1.2783	0.9922
330229 ...	01/01/92	12/31/92	1.2296	0.9829
330230 ...	01/01/92	12/31/92	1.5137	0.9939
330232 ...	01/01/92	12/31/92	1.2527	0.9966
330233 ...	01/01/92	12/31/92	1.5033	0.9980
330235 ...	01/01/92	12/31/92	1.1588	0.9960
330236 ...	01/01/92	12/31/92	1.3504	0.9964
330238 ...	01/01/92	12/31/92	1.1186	0.9848
330239 ...	01/01/92	12/31/92	1.1723	0.9961
330241 ...	01/01/92	12/31/92	1.8625	0.9965
330242 ...	01/01/92	12/31/92	1.2945	0.9950
330245 ...	01/01/92	12/31/92	1.2543	0.9889
330246 ...	01/01/92	12/31/92	1.2027	0.9911
330247 ...	01/01/92	12/31/92	0.6823	0.9986
330249 ...	01/01/92	12/31/92	1.2669	0.9948
330250 ...	01/01/92	12/31/92	1.2236	0.9961
330252 ...	01/01/92	12/31/92	0.9576	0.9348
330254 ...	01/01/92	12/31/92	0.9927	0.9827
330258 ...	01/01/92	12/31/92	1.2801	0.9906
330259 ...	01/01/92	12/31/92	1.3661	0.9946
330261 ...	01/01/92	12/31/92	1.2340	0.9935

TABLE 9.—1992 TRANSFER ADJUSTED CASE MIX INDEX AND TRANSFER ADJUSTMENT TO DISCHARGES FOR CAPITAL HOSPITAL-SPECIFIC RATE REDETERMINATIONS—Continued

Provider number	Cost reporting period		Transfer adjusted case mix index	Transfer adjustment to discharges
	Begin	End		
330263 ...	01/01/92	12/31/92	1.0625	0.9832
330264 ...	01/01/92	12/31/92	1.2262	0.9872
330265 ...	01/01/92	12/31/92	1.2677	0.9934
330267 ...	01/01/92	12/31/92	1.2644	0.9945
330268 ...	01/01/92	12/31/92	1.0670	0.9530
330270 ...	01/01/92	12/31/92	1.9302	0.9946
330273 ...	01/01/92	12/31/92	1.3190	0.9970
330275 ...	01/01/92	12/31/92	1.2640	0.9977
330276 ...	01/01/92	12/31/92	1.2364	0.9888
330277 ...	01/01/92	12/31/92	1.1747	0.9820
330279 ...	01/01/92	12/31/92	1.2664	0.9964
330281 ...	01/01/92	12/31/92	0.5608	1.0000
330285 ...	01/01/92	12/31/92	1.6813	0.9983
330286 ...	01/01/92	12/31/92	1.3388	0.9947
330288 ...	01/01/92	12/31/92	1.0106	0.9841
330290 ...	01/01/92	12/31/92	1.7578	0.9968
330293 ...	01/01/92	12/31/92	1.1648	0.9940
330304 ...	01/01/92	12/31/92	1.2557	0.9921
330306 ...	01/01/92	12/31/92	1.3857	0.9960
330307 ...	01/01/92	12/31/92	1.2278	0.9801
330308 ...	01/01/92	12/31/92	1.2536	0.9942
330309 ...	01/01/92	12/31/92	1.2225	0.9924
330314 ...	01/01/92	12/31/92	1.2416	0.9946
330315 ...	01/01/92	12/31/92	1.1629	0.9917
330316 ...	01/01/92	12/31/92	1.2485	0.9937
330327 ...	01/01/92	12/31/92	0.9073	0.9773
330331 ...	01/01/92	12/31/92	1.2267	0.9938
330332 ...	01/01/92	12/31/92	1.2329	0.9952
330333 ...	01/01/92	12/31/92	1.2617	0.9964
330336 ...	01/01/92	12/31/92	1.3219	0.9858
330338 ...	01/01/92	12/31/92	1.1616	0.9954
330339 ...	01/01/92	12/31/92	0.7386	0.9833
330340 ...	01/01/92	12/31/92	1.1554	0.9673
330350 ...	01/01/92	12/31/92	1.8039	0.9988
330353 ...	01/01/92	12/31/92	1.1972	0.9933
330357 ...	01/01/92	12/31/92	1.3621	0.9920
330359 ...	01/01/92	12/31/92	0.9108	0.9606
330372 ...	01/01/92	12/31/92	1.2644	0.9931
330381 ...	01/01/92	12/31/92	1.2519	0.9990
330386 ...	01/01/92	12/31/92	1.1400	0.9737
330387 ...	01/01/92	12/31/92	0.8939	1.0000
330389 ...	01/01/92	12/31/92	1.8829	0.9958
330390 ...	01/01/92	12/31/92	1.2283	0.9960
330393 ...	01/01/92	12/31/92	1.6220	0.9983
330394 ...	01/01/92	12/31/92	1.4257	0.9981
330395 ...	01/01/92	12/31/92	1.3711	0.9877
330397 ...	01/01/92	12/31/92	1.3349	0.9961
330398 ...	01/01/92	12/31/92	1.1771	0.9921
330399 ...	01/01/92	12/31/92	1.3448	0.9986
340001 ...	10/01/91	09/30/92	1.3303	0.9824
340002 ...	10/01/91	09/30/92	1.8311	0.9975
340003 ...	10/01/91	09/30/92	1.1683	0.9568
340004 ...	10/01/91	09/30/92	1.4036	0.9970
340005 ...	10/01/91	09/30/92	1.1612	0.9749
340006 ...	10/01/91	09/30/92	1.1677	0.9446
340007 ...	10/01/91	09/30/92	1.1553	0.9702
340008 ...	10/01/91	09/30/92	1.1280	0.9754
340009 ...	10/01/91	09/30/92	1.1606	0.9914
340010 ...	09/29/91	10/03/92	1.3195	0.9787
340011 ...	10/01/91	09/30/92	1.0619	0.9720
340012 ...	10/01/91	09/30/92	1.0947	0.9639
340013 ...	10/01/91	09/30/92	1.2450	0.9728
340015 ...	10/01/91	09/30/92	1.2341	0.9780
340016 ...	10/01/91	09/30/92	1.1150	0.9601
340017 ...	10/01/91	09/30/92	1.2899	0.9876
340018 ...	10/01/91	09/30/92	1.1840	0.9601
340021 ...	10/01/91	09/30/92	1.2316	0.9865
340022 ...	10/01/91	09/30/92	1.0689	0.9629
340023 ...	01/01/92	12/31/92	1.2484	0.9691
340024 ...	10/01/91	09/30/92	1.2425	0.9595
340025 ...	10/01/91	09/30/92	1.1635	0.9829
340027 ...	10/01/91	09/30/92	1.1513	0.9920
340028 ...	10/01/91	09/30/92	1.4270	0.9931

TABLE 9.—1992 TRANSFER ADJUSTED CASE MIX INDEX AND TRANSFER ADJUSTMENT TO DISCHARGES FOR CAPITAL HOSPITAL-SPECIFIC RATE REDETERMINATIONS—Continued

Provider number	Cost reporting period		Transfer adjusted case mix index	Transfer adjustment to discharges
	Begin	End		
340031 ...	10/01/91	09/30/92	1.0888	0.9748
340034 ...	10/01/91	09/30/92	1.2176	0.9636
340035 ...	10/01/91	09/30/92	1.0925	0.9761
340036 ...	10/01/91	09/30/92	1.1858	0.9766
340037 ...	10/01/91	09/30/92	1.2547	0.9926
340038 ...	10/01/91	09/30/92	1.2257	0.9719
340039 ...	10/01/91	09/30/92	1.2778	0.9812
340040 ...	10/01/91	09/30/92	1.7860	0.9992
340041 ...	10/01/91	09/30/92	1.2310	0.9697
340042 ...	10/01/91	09/30/92	1.1433	0.9769
340044 ...	10/01/91	09/30/92	1.0610	0.9719
340045 ...	10/01/91	09/30/92	0.9931	0.9645
340048 ...	10/01/91	09/30/92	1.2343	0.8093
340049 ...	10/01/91	09/30/92	0.6791	1.0000
340050 ...	10/01/91	09/30/92	1.1977	0.9722
340051 ...	10/01/91	09/30/92	1.1897	0.9761
340052 ...	10/01/91	09/30/92	1.0730	0.9683
340053 ...	10/01/91	09/30/92	1.5648	0.9993
340054 ...	10/01/91	09/30/92	1.0527	0.9685
340055 ...	10/01/91	09/30/92	1.2083	0.9847
340060 ...	10/01/91	09/30/92	1.1350	0.9638
340063 ...	10/01/91	09/30/92	1.0188	0.9671
340064 ...	10/01/91	09/30/92	1.1056	0.9734
340065 ...	10/01/91	09/30/92	1.2295	0.9680
340067 ...	10/01/91	09/30/92	1.1193	0.9792
340068 ...	10/01/91	09/30/92	1.2994	0.9758
340069 ...	10/01/91	09/30/92	1.7634	0.9940
340070 ...	10/01/91	09/30/92	1.2492	0.9708
340071 ...	10/01/91	09/30/92	1.0749	0.9556
340072 ...	10/01/91	09/30/92	1.0742	0.9812
340075 ...	10/01/91	09/30/92	1.1810	0.9861
340080 ...	10/01/91	09/30/92	1.0880	0.9632
340084 ...	10/01/91	09/30/92	1.0521	0.9831
340085 ...	10/01/91	09/30/92	1.2701	0.9857
340087 ...	10/01/91	09/30/92	1.1957	0.9866
340088 ...	10/01/91	09/30/92	1.2183	0.9757
340089 ...	10/01/91	09/30/92	0.9456	0.9628
340090 ...	10/01/91	09/30/92	1.1340	0.9559
340091 ...	10/01/91	09/30/92	1.6709	0.9991
340093 ...	10/01/91	09/30/92	1.0531	0.9856
340094 ...	10/01/91	09/30/92	1.3615	0.9824
340096 ...	10/01/91	09/30/92	1.1727	0.9665
340097 ...	10/01/91	09/30/92	1.0310	0.9555
340098 ...	09/29/91	09/26/92	1.6374	0.9976
340099 ...	10/01/91	09/30/92	1.1799	0.9760
340101 ...	01/01/92	12/31/92	0.9984	0.9652
340104 ...	10/01/91	09/30/92	0.9596	0.9704
340105 ...	10/01/91	09/30/92	1.3428	0.9971
340106 ...	10/01/91	09/30/92	1.1225	0.9833
340107 ...	01/01/92	12/31/92	1.2604	0.9747
340109 ...	10/01/91	09/30/92	1.3163	0.9842
340111 ...	10/01/91	09/30/92	1.1943	0.9614
340112 ...	10/01/91	09/30/92	1.0516	0.9596
340113 ...	10/01/91	09/30/92	1.9493	0.9991
340114 ...	10/01/91	09/30/92	1.4635	0.9990
340115 ...	10/01/91	09/30/92	1.4767	0.9970
340119 ...	10/01/91	09/30/92	1.2858	0.9763
340120 ...	10/01/91	09/30/92	1.0893	0.9692
340121 ...	10/01/91	09/30/92	1.0371	0.9702
340122 ...	10/01/91	09/30/92	1.0030	0.9361
340123 ...	10/01/91	09/30/92	1.1485	0.9693
340124 ...	10/01/91	09/30/92	1.0842	0.9637
340125 ...	10/01/91	09/30/92	1.4541	0.9941
340126 ...	10/01/91	09/30/92	1.3594	0.9806
340127 ...	10/01/91	09/30/92	1.1979	0.9638
340129 ...	10/01/91	09/30/92	1.3007	0.9791
340130 ...	10/01/91	09/30/92	1.3925	0.9795
340131 ...	10/01/91	09/30/92	1.3316	0.9884
340132 ...	10/01/91	09/30/92	1.4253	0.9582
340133 ...	10/01/91	09/30/92	1.1228	0.9685
340141 ...	10/01/91	09/30/92	1.5680	0.9984
340142 ...	10/01/91	09/30/92	1.1905	0.9758
340145 ...	10/01/91	09/30/92	1.3136	0.9686

TABLE 9.—1992 TRANSFER ADJUSTED CASE MIX INDEX AND TRANSFER ADJUSTMENT TO DISCHARGES FOR CAPITAL HOSPITAL-SPECIFIC RATE REDETERMINATIONS—Continued

Provider number	Cost reporting period		Transfer adjusted case mix index	Transfer adjustment to discharges
	Begin	End		
340146 ...	10/01/91	09/30/92	1.0421	0.9692
340147 ...	10/06/91	10/04/92	1.2924	0.9921
340151 ...	10/01/91	09/30/92	1.1762	0.9841
340159 ...	10/01/91	09/30/92	1.1500	0.9727
340162 ...	01/01/92	12/31/92	1.2638	0.9839
340166 ...	10/01/91	09/30/92	1.4162	0.9895
340168 ...	10/01/91	09/30/92	0.5580	1.0000
350004 ...	10/01/91	09/30/92	1.8093	0.9991
350007 ...	10/01/91	09/30/92	1.0530	0.9753
350015 ...	01/01/92	12/31/92	1.5322	0.9972
350016 ...	01/01/92	12/31/92	0.9350	0.9624
350018 ...	10/01/91	09/30/92	1.0202	0.9814
350019 ...	01/01/92	12/31/92	1.5679	0.9958
350020 ...	10/01/91	09/30/92	1.3204	0.9908
350023 ...	01/01/92	12/31/92	0.9744	0.9531
350024 ...	10/01/91	09/30/92	1.0449	0.9750
350027 ...	10/01/91	09/30/92	0.9651	0.9616
350033 ...	01/01/92	12/31/92	0.9587	0.9686
350038 ...	01/01/92	12/31/92	1.1091	0.9679
350041 ...	01/01/92	12/31/92	0.9990	0.9735
350042 ...	01/01/92	12/31/92	1.0134	0.9873
350051 ...	01/01/92	12/31/92	0.9811	0.9930
350055 ...	01/01/92	12/31/92	0.9324	0.9209
350066 ...	10/01/91	09/30/92	0.8568	0.9883
360001 ...	01/01/92	12/31/92	1.2559	0.9916
360002 ...	01/01/92	12/31/92	1.1500	0.9698
360007 ...	01/01/92	12/31/92	1.1104	0.9855
360009 ...	01/01/92	12/31/92	1.3291	0.9873
360010 ...	01/01/92	12/31/92	1.1607	0.9776
360012 ...	01/01/92	12/31/92	1.2662	0.9883
360013 ...	01/01/92	12/31/92	1.0885	0.9772
360015 ...	01/01/92	12/31/92	1.4796	0.9986
360016 ...	01/01/92	12/31/92	1.4936	0.9986
360018 ...	01/01/92	12/31/92	1.4812	0.9968
360019 ...	01/01/92	12/31/92	1.2150	0.9853
360020 ...	01/01/92	12/31/92	1.2992	0.9944
360021 ...	01/01/92	12/31/92	1.2208	0.9856
360024 ...	01/01/92	12/31/92	1.2470	0.9900
360025 ...	01/01/92	12/31/92	1.1544	0.9850
360026 ...	01/01/92	12/31/92	1.1384	0.9928
360027 ...	01/01/92	12/31/92	1.5476	0.9976
360030 ...	01/01/92	12/31/92	1.1567	0.9735
360032 ...	01/01/92	12/31/92	1.1422	0.9747
360034 ...	01/01/92	12/31/92	1.1390	0.9572
360036 ...	01/01/92	12/31/92	1.2041	0.9821
360037 ...	01/01/92	12/31/92	2.0310	0.9920
360038 ...	01/01/92	12/31/92	1.5149	0.9985
360039 ...	01/01/92	12/31/92	1.2677	0.9924
360041 ...	01/01/92	12/31/92	1.3394	0.9913
360042 ...	01/01/92	12/31/92	1.1099	0.9549
360044 ...	01/01/92	12/31/92	1.0736	0.9702
360046 ...	01/01/92	12/31/92	1.1474	0.9748
360047 ...	01/01/92	12/31/92	1.0719	0.9666
360049 ...	01/01/92	12/31/92	1.2907	0.9937
360050 ...	01/01/92	12/31/92	1.2432	0.9504
360051 ...	01/01/92	12/31/92	1.5045	0.9971
360055 ...	01/01/92	12/31/92	1.2006	0.9901
360056 ...	01/01/92	12/31/92	1.2856	0.9881
360057 ...	01/01/92	12/31/92	0.9790	0.9671
360059 ...	01/01/92	12/31/92	1.5255	0.9952
360063 ...	01/01/92	12/31/92	1.1889	0.9678
360064 ...	01/01/92	12/31/92	1.4854	0.9954
360065 ...	01/01/92	12/31/92	1.2658	0.9844
360066 ...	01/01/92	12/31/92	1.2578	0.9858
360067 ...	01/01/92	12/31/92	1.0608	0.9837
360068 ...	01/01/92	12/31/92	1.5481	0.9990
360069 ...	01/01/92	12/31/92	1.0135	0.9544
360070 ...	01/01/92	12/31/92	1.5157	0.9947
360071 ...	01/01/92	12/31/92	1.2869	0.9778
360072 ...	01/01/92	12/31/92	1.1486	0.9732
360074 ...	10/01/91	09/30/92	1.3322	0.9941
360075 ...	01/01/92	12/31/92	1.4634	0.9960
360076 ...	01/01/92	12/31/92	1.3168	0.9877

TABLE 9.—1992 TRANSFER ADJUSTED CASE MIX INDEX AND TRANSFER ADJUSTMENT TO DISCHARGES FOR CAPITAL HOSPITAL-SPECIFIC RATE REDETERMINATIONS—Continued

Provider number	Cost reporting period		Transfer adjusted case mix index	Transfer adjustment to discharges
	Begin	End		
360077 ...	01/01/92	12/31/92	1.4310	0.9967
360078 ...	01/01/92	12/31/92	1.2902	0.9887
360079 ...	01/01/92	12/31/92	1.6702	0.9989
360080 ...	01/01/92	12/31/92	1.1923	0.9937
360081 ...	01/01/92	12/31/92	1.3096	0.9960
360082 ...	01/01/92	12/31/92	1.2854	0.9898
360083 ...	01/01/92	12/31/92	1.2466	0.9846
360084 ...	01/01/92	12/31/92	1.5328	0.9949
360086 ...	01/01/92	12/31/92	1.3574	0.9868
360087 ...	01/01/92	12/31/92	1.3647	0.9888
360088 ...	01/01/92	12/31/92	1.1591	0.9759
360089 ...	01/01/92	12/31/92	1.0965	0.9712
360091 ...	01/01/92	12/31/92	1.2534	0.9884
360092 ...	01/01/92	12/31/92	1.1457	0.9726
360093 ...	01/01/92	12/31/92	1.2550	0.9601
360094 ...	01/01/92	12/31/92	1.2065	0.9960
360095 ...	01/01/92	12/31/92	1.2824	0.9861
360096 ...	01/01/92	12/31/92	1.0981	0.9862
360098 ...	01/01/92	12/31/92	1.3980	0.9906
360099 ...	10/01/91	09/30/92	1.0659	0.9735
360100 ...	01/01/92	12/31/92	1.2883	0.9898
360101 ...	01/01/92	12/31/92	1.7042	0.9874
360102 ...	01/01/92	12/31/92	1.2667	0.9903
360103 ...	01/01/92	12/31/92	1.3262	0.9970
360104 ...	01/01/92	12/31/92	0.9194	0.9919
360106 ...	01/01/92	12/31/92	1.1369	0.9672
360107 ...	09/01/91	08/31/92	1.1149	0.9694
360108 ...	01/01/92	12/31/92	1.0176	0.9600
360109 ...	01/01/92	12/31/92	1.0674	0.9725
360112 ...	01/01/92	12/31/92	1.6766	0.9991
360113 ...	01/01/92	12/31/92	1.3060	0.9924
360114 ...	01/01/92	12/31/92	1.0617	0.9786
360115 ...	01/01/92	12/31/92	1.2183	0.9883
360116 ...	01/01/92	12/31/92	1.0540	0.9604
360118 ...	01/01/92	12/31/92	1.2386	0.9842
360119 ...	01/01/92	12/31/92	1.2301	0.9902
360120 ...	01/01/92	12/31/92	0.8202	1.0000
360121 ...	10/01/91	09/30/92	1.2751	0.9783
360122 ...	01/01/92	12/31/92	1.3295	0.9917
360123 ...	01/01/92	12/31/92	1.2116	0.9915
360124 ...	01/01/92	12/31/92	1.2214	0.9878
360125 ...	01/01/92	12/31/92	1.0791	0.9765
360126 ...	01/01/92	12/31/92	1.2388	0.9912
360127 ...	01/01/92	12/31/92	1.0562	0.9754
360128 ...	01/01/92	12/31/92	1.0543	0.9819
360129 ...	01/01/92	12/31/92	1.0223	0.9648
360130 ...	01/01/92	12/31/92	1.1294	0.9886
360131 ...	01/01/92	12/31/92	1.2096	0.9858
360132 ...	01/01/92	12/31/92	1.2199	0.9892
360133 ...	01/01/92	12/31/92	1.4237	0.9957
360135 ...	01/01/92	12/31/92	1.1422	0.9676
360136 ...	01/01/92	12/31/92	1.0894	0.9178
360137 ...	01/01/92	12/31/92	1.5592	0.9966
360139 ...	01/01/92	12/31/92	1.0080	0.9419
360140 ...	01/01/92	12/31/92	1.0259	0.9816
360141 ...	01/01/92	12/31/92	1.4459	0.9982
360142 ...	01/01/92	12/31/92	0.9856	0.9551
360143 ...	01/01/92	12/31/92	1.2874	0.9921
360144 ...	01/01/92	12/31/92	1.2738	0.9904
360145 ...	01/01/92	12/31/92	1.5562	0.9965
360147 ...	10/01/91	09/30/92	1.1781	0.9696
360148 ...	01/01/92	12/31/92	1.1971	0.9671
360149 ...	01/01/92	12/31/92	1.1108	0.9882
360150 ...	01/01/92	12/31/92	1.2532	0.9879
360151 ...	01/01/92	12/31/92	1.3815	0.9892
360152 ...	01/01/92	12/31/92	1.4969	0.9973
360153 ...	01/01/92	12/31/92	1.1847	0.9830
360154 ...	01/01/92	12/31/92	1.0782	0.9755
360155 ...	01/01/92	12/31/92	1.3238	0.9934
360156 ...	10/01/91	09/30/92	1.1299	0.9735
360159 ...	01/01/92	12/31/92	1.1973	0.9743
360162 ...	01/01/92	12/31/92	1.2116	0.9904
360163 ...	01/01/92	12/31/92	1.7238	0.9966

TABLE 9.—1992 TRANSFER ADJUSTED CASE MIX INDEX AND TRANSFER ADJUSTMENT TO DISCHARGES FOR CAPITAL HOSPITAL-SPECIFIC RATE REDETERMINATIONS—Continued

Provider number	Cost reporting period		Transfer adjusted case mix index	Transfer adjustment to discharges
	Begin	End		
360164 ...	01/01/92	12/31/92	0.9228	0.9806
360165 ...	11/01/91	10/31/92	1.0648	0.9764
360166 ...	01/01/92	12/31/92	1.1530	0.9888
360169 ...	01/01/92	12/31/92	1.0676	0.9350
360170 ...	01/01/92	12/31/92	1.1382	0.9722
360172 ...	01/01/92	12/31/92	1.3950	0.9833
360174 ...	01/01/92	12/31/92	1.1901	0.9836
360175 ...	01/01/92	12/31/92	1.1445	0.9737
360176 ...	01/01/92	12/31/92	1.2475	0.9767
360177 ...	01/01/92	12/31/92	1.2729	0.9674
360179 ...	12/29/91	12/27/92	1.2504	0.9952
360180 ...	01/01/92	12/31/92	2.1939	0.9986
360184 ...	01/01/92	12/31/92	0.7996	0.9503
360186 ...	01/01/92	12/31/92	1.2301	0.9561
360188 ...	01/01/92	12/31/92	1.0577	0.9697
360189 ...	01/01/92	12/31/92	1.0850	0.9846
360192 ...	01/01/92	12/31/92	1.3418	0.9922
360193 ...	01/01/92	12/31/92	1.3367	0.9925
360194 ...	10/01/91	09/30/92	1.1461	0.9779
360195 ...	01/01/92	12/31/92	1.2020	0.9558
360197 ...	01/01/92	12/31/92	1.1992	0.9431
360200 ...	01/01/92	12/31/92	1.1345	0.9590
360203 ...	01/01/92	12/31/92	1.1392	0.9754
360204 ...	01/01/92	12/31/92	1.2556	0.9875
360210 ...	01/01/92	12/31/92	1.1477	0.9817
360211 ...	01/01/92	12/31/92	1.1837	0.9893
360212 ...	01/01/92	12/31/92	1.4474	0.9967
360213 ...	01/01/92	12/31/92	1.1295	0.9787
360218 ...	01/01/92	12/31/92	1.3028	0.9831
360230 ...	01/01/92	12/31/92	1.3347	0.9916
360231 ...	01/01/92	12/31/92	1.0903	0.9755
360232 ...	01/01/92	12/31/92	1.0782	0.9770
360234 ...	01/01/92	12/31/92	1.2893	0.9928
360236 ...	01/01/92	12/31/92	1.1713	0.9893
360239 ...	01/01/92	12/31/92	1.1713	0.9854
360240 ...	01/01/92	12/31/92	0.5568	1.0000
360241 ...	01/01/92	12/31/92	0.5805	0.9605
370001 ...	01/01/92	12/31/92	1.6880	0.9989
370002 ...	01/01/92	12/31/92	1.2001	0.9841
370006 ...	10/01/91	09/30/92	1.2486	0.9815
370007 ...	01/01/92	12/31/92	1.1497	0.9713
370014 ...	10/01/91	09/30/92	1.2893	0.9774
370017 ...	01/01/92	12/31/92	0.9879	0.9639
370018 ...	11/01/91	10/31/92	1.2368	0.9871
370020 ...	10/01/91	09/30/92	1.2776	0.9742
370021 ...	09/01/91	08/31/92	0.9781	0.9621
370025 ...	10/01/91	09/30/92	1.3412	0.9833
370032 ...	11/01/91	10/31/92	1.3665	0.9983
370033 ...	10/01/91	09/30/92	1.1177	0.9930
370037 ...	01/01/92	12/31/92	1.5534	0.9981
370039 ...	11/01/91	10/31/92	1.2674	0.9761
370040 ...	10/01/91	09/30/92	1.0749	0.9855
370049 ...	01/01/92	12/31/92	1.3558	0.9749
370051 ...	10/01/91	09/30/92	0.9786	0.9618
370054 ...	01/01/92	12/31/92	1.2663	0.9797
370057 ...	01/01/92	12/31/92	1.1219	0.9697
370077 ...	01/01/92	12/31/92	1.2458	0.9879
370078 ...	01/01/92	12/31/92	1.5195	0.9982
370092 ...	10/01/91	09/30/92	1.0792	0.9567
370093 ...	09/01/91	08/31/92	1.7379	0.9975
370094 ...	01/01/92	12/31/92	1.4423	0.9985
370095 ...	01/01/92	12/31/92	0.8996	0.9755
370105 ...	10/01/91	09/30/92	1.9973	0.9945
370106 ...	11/01/91	10/31/92	1.3876	0.9986
370108 ...	10/01/91	09/30/92	1.1438	0.9663
370114 ...	10/01/91	09/30/92	1.6053	0.9994
370121 ...	09/01/91	08/31/92	1.3452	0.9661
370141 ...	09/01/91	08/31/92	1.4461	0.9944
370146 ...	01/01/92	12/31/92	1.0750	0.9673
370148 ...	09/01/91	08/31/92	1.3271	0.9886
370149 ...	10/01/91	09/30/92	1.2338	0.9698
370157 ...	10/01/91	09/30/92	0.9098	0.9742
370161 ...	11/01/91	10/31/92	1.2572	0.9829

TABLE 9.—1992 TRANSFER ADJUSTED CASE MIX INDEX AND TRANSFER ADJUSTMENT TO DISCHARGES FOR CAPITAL HOSPITAL-SPECIFIC RATE REDETERMINATIONS—Continued

Provider number	Cost reporting period		Transfer adjusted case mix index	Transfer adjustment to discharges
	Begin	End		
370165 ...	10/01/91	09/30/92	1.1334	0.9766
370169 ...	01/01/92	12/31/92	1.0575	0.9767
370176 ...	01/01/92	12/31/92	1.2282	0.9833
370177 ...	01/01/92	12/31/92	0.9639	0.9836
370179 ...	10/01/91	09/30/92	0.9587	0.9580
370189 ...	01/01/92	12/31/92	1.0518	0.9881
370190 ...	01/01/92	12/31/92	1.2695	1.0000
380004 ...	01/01/92	12/31/92	1.7954	0.9809
380006 ...	01/01/92	12/31/92	1.2676	0.9843
380010 ...	01/01/92	12/31/92	1.1229	0.9858
380014 ...	01/01/92	12/31/92	1.3408	0.9877
380018 ...	10/01/91	09/30/92	1.8928	0.9979
380019 ...	01/01/92	12/31/92	1.1380	0.9865
380020 ...	10/01/91	09/30/92	1.3743	0.9822
380021 ...	10/01/91	09/30/92	1.2149	0.9909
380022 ...	10/01/91	09/30/92	1.2160	0.9861
380026 ...	01/01/92	12/31/92	1.3335	0.9590
380029 ...	10/01/91	09/30/92	1.1244	0.9592
380036 ...	01/01/92	12/31/92	1.0590	0.9395
380038 ...	08/01/91	07/31/92	1.3043	0.9801
380039 ...	01/01/92	12/31/92	1.2683	0.9798
380042 ...	01/01/92	12/31/92	1.0824	0.9602
380047 ...	01/01/92	12/31/92	1.6102	0.9959
380050 ...	10/01/91	09/30/92	1.3220	0.9880
380051 ...	10/01/91	09/30/92	1.4752	0.9967
380052 ...	01/01/92	12/31/92	1.2151	0.9825
380055 ...	01/01/92	12/31/92	1.1806	0.9902
380056 ...	01/01/92	12/31/92	1.0921	0.9727
380060 ...	01/01/92	12/31/92	1.3667	0.9914
380061 ...	01/01/92	12/31/92	1.6283	0.9992
380064 ...	08/01/91	07/31/92	1.3160	0.9883
380068 ...	10/01/91	09/30/92	0.9905	0.9615
380070 ...	01/01/92	12/31/92	1.0553	0.9536
380075 ...	01/01/92	12/31/92	1.3872	0.9919
380082 ...	01/01/92	12/31/92	1.2519	0.9916
380091 ...	01/01/92	12/31/92	1.1953	0.9870
390028 ...	01/01/92	12/31/92	1.7388	0.9990
390054 ...	01/01/92	12/31/92	1.1457	0.9783
390060 ...	01/01/92	12/31/92	1.1246	0.9864
390128 ...	01/01/92	12/31/92	1.1399	0.9903
390169 ...	01/01/92	12/31/92	1.2492	0.9969
390186 ...	01/01/92	12/31/92	0.9501	0.9785
390224 ...	10/01/91	09/30/92	0.9310	0.9748
390237 ...	01/01/92	12/31/92	1.4765	0.9982
390272 ...	09/01/91	08/31/92	0.6160	1.0000
400002 ...	01/01/92	12/31/92	1.3244	0.9996
400005 ...	01/01/92	12/31/92	1.0313	0.9993
400007 ...	01/01/92	12/31/92	1.1457	0.9993
400008 ...	01/01/92	12/31/92	1.2396	0.9953
400010 ...	10/01/91	09/30/92	0.9300	0.9970
400011 ...	01/01/92	12/31/92	1.0449	0.9949
400014 ...	01/01/92	12/31/92	1.3118	0.9982
400016 ...	10/01/91	09/30/92	1.2791	0.9997
400017 ...	01/01/92	12/31/92	1.0904	0.9994
400019 ...	01/01/92	12/31/92	1.6000	0.9989
400022 ...	01/01/92	12/31/92	1.2896	0.9995
400024 ...	01/01/92	12/31/92	1.0623	0.9984
400032 ...	01/01/92	12/31/92	1.1299	0.9985
400089 ...	01/01/92	12/31/92	0.9379	1.0000
400094 ...	01/01/92	12/31/92	0.9182	0.9972
400098 ...	01/01/92	12/31/92	1.1958	0.9985
400106 ...	10/01/91	09/30/92	1.1813	0.9979
400109 ...	10/01/91	09/30/92	1.5196	0.9997
400111 ...	01/01/92	12/31/92	1.1536	0.9964
400112 ...	09/01/91	08/31/92	1.2283	0.9952
400113 ...	10/01/91	09/30/92	1.2847	0.9951
400115 ...	01/01/92	12/31/92	0.9684	0.9972
400117 ...	01/01/92	12/31/92	1.2015	0.9985
400118 ...	01/01/92	12/31/92	1.1761	0.9985
400120 ...	01/01/92	12/31/92	1.3179	0.9997
410001 ...	10/01/91	09/30/92	1.3347	0.9932
410002 ...	10/01/91	09/30/92	1.1398	0.9942
410004 ...	10/01/91	09/30/92	1.4385	0.9925

TABLE 9.—1992 TRANSFER ADJUSTED CASE MIX INDEX AND TRANSFER ADJUSTMENT TO DISCHARGES FOR CAPITAL HOSPITAL-SPECIFIC RATE REDETERMINATIONS—Continued

Provider number	Cost reporting period		Transfer adjusted case mix index	Transfer adjustment to discharges
	Begin	End		
410005 ...	10/01/91	09/30/92	1.3075	0.9968
410006 ...	10/01/91	09/30/92	1.2046	0.9861
410007 ...	10/01/91	09/30/92	1.5820	0.9967
410008 ...	10/01/91	09/30/92	1.1549	0.9827
410009 ...	10/01/91	09/30/92	1.3271	0.9957
410010 ...	10/01/91	09/30/92	1.0443	0.9794
410011 ...	10/01/91	09/30/92	1.2045	0.9943
410012 ...	10/01/91	09/30/92	1.6533	0.9986
410013 ...	10/01/91	09/30/92	1.1821	0.9821
420005 ...	01/01/92	12/31/92	1.0816	0.9754
420009 ...	10/01/91	09/30/92	1.2382	0.9547
420010 ...	10/01/91	09/30/92	1.0617	0.9539
420011 ...	10/01/91	09/30/92	1.1237	0.9741
420014 ...	10/01/91	09/30/92	1.0623	0.9610
420015 ...	10/01/91	09/30/92	1.3033	0.9872
420016 ...	10/01/91	09/30/92	1.2075	0.9861
420018 ...	09/29/91	09/26/92	1.6624	0.9969
420019 ...	10/01/91	09/30/92	1.1569	0.9804
420020 ...	10/01/91	09/30/92	1.2338	0.9732
420023 ...	01/01/92	12/31/92	1.3544	0.9956
420026 ...	09/09/91	09/05/92	1.9255	0.9986
420027 ...	09/29/91	09/26/92	1.3321	0.9921
420028 ...	10/01/91	09/30/92	1.1480	0.9425
420029 ...	10/01/91	09/30/92	1.8346	0.9835
420030 ...	01/01/92	12/31/92	1.2273	0.9693
420031 ...	10/01/91	09/30/92	0.9940	0.9226
420033 ...	10/01/91	09/30/92	1.1918	0.9733
420036 ...	10/01/91	09/30/92	1.2707	0.9702
420037 ...	10/01/91	09/30/92	1.1891	0.9697
420038 ...	10/01/91	09/30/92	1.2625	0.9757
420039 ...	10/01/91	09/30/92	1.1511	0.9709
420040 ...	10/01/91	09/30/92	1.2424	0.9940
420042 ...	10/01/91	09/30/92	1.0743	0.9784
420043 ...	10/01/91	09/30/92	1.2392	0.9879
420044 ...	10/01/91	09/30/92	1.1475	0.9875
420048 ...	10/01/91	09/30/92	1.1542	0.9617
420049 ...	10/01/91	09/30/92	1.1452	0.9786
420051 ...	10/01/91	09/30/92	1.5887	0.9976
420054 ...	09/01/91	08/31/92	1.2027	0.9617
420055 ...	10/01/91	09/30/92	1.0463	0.9781
420056 ...	10/01/91	09/30/92	1.1265	0.9270
420057 ...	10/01/91	09/30/92	1.1345	0.9715
420059 ...	10/01/91	09/30/92	0.9769	0.9572
420061 ...	10/01/91	09/30/92	1.2768	0.9596
420064 ...	10/01/91	09/30/92	1.0722	0.9622
420065 ...	09/01/91	08/31/92	1.3049	0.9978
420066 ...	10/01/91	09/30/92	0.9470	0.9573
420067 ...	10/01/91	09/30/92	1.1874	0.9617
420068 ...	10/01/91	09/30/92	1.2189	0.9910
420069 ...	10/01/91	09/30/92	1.0663	0.9465
420070 ...	10/01/91	09/30/92	1.3034	0.9824
420071 ...	10/01/91	09/30/92	1.3942	0.9896
420072 ...	10/01/91	09/30/92	0.9938	0.9565
420073 ...	10/01/91	09/30/92	1.2987	0.9909
420074 ...	10/01/91	09/30/92	0.9888	0.9513
420075 ...	10/01/91	09/30/92	1.0061	0.9692
420076 ...	01/01/92	12/31/92	1.1815	0.9952
420078 ...	10/01/91	09/30/92	1.6560	0.9979
420081 ...	10/01/91	09/30/92	0.8313	0.9986
420086 ...	10/01/91	09/30/92	1.4242	0.9947
420087 ...	10/01/91	09/30/92	1.5443	0.9993
420088 ...	10/01/91	09/30/92	1.2123	0.9914
420089 ...	09/01/91	08/31/92	1.3136	0.9875
430008 ...	01/01/92	12/31/92	1.2358	0.9761
430009 ...	01/01/92	12/31/92	1.1168	0.9452
430013 ...	10/01/91	09/30/92	1.2057	0.9770
430014 ...	10/01/91	09/30/92	1.2712	0.9856
430015 ...	08/01/91	07/31/92	1.0674	0.9803
430016 ...	10/01/91	09/30/92	1.7349	0.9974
430023 ...	09/01/91	08/31/92	0.6890	0.9622
430024 ...	01/01/92	12/31/92	0.9965	0.9529
430026 ...	01/01/92	12/31/92	0.9841	0.9622
430028 ...	01/01/92	12/31/92	1.1107	0.9790

TABLE 9.—1992 TRANSFER ADJUSTED CASE MIX INDEX AND TRANSFER ADJUSTMENT TO DISCHARGES FOR CAPITAL HOSPITAL-SPECIFIC RATE REDETERMINATIONS—Continued

Provider number	Cost reporting period		Transfer adjusted case mix index	Transfer adjustment to discharges
	Begin	End		
430031 ...	01/01/92	12/31/92	0.9441	0.9444
430034 ...	01/01/92	12/31/92	1.0297	0.9464
430036 ...	01/01/92	12/31/92	1.0050	0.9812
430040 ...	10/01/91	09/30/92	0.9224	0.9736
430041 ...	01/01/92	12/31/92	0.8938	0.9267
430043 ...	01/01/92	12/31/92	1.1607	0.9689
430044 ...	01/01/92	12/31/92	0.9269	0.9589
430047 ...	01/01/92	12/31/92	1.1647	0.9640
430048 ...	01/01/92	12/31/92	1.1441	0.9796
430049 ...	01/01/92	12/31/92	0.9656	0.9398
430051 ...	01/01/92	12/31/92	1.0102	0.9576
430056 ...	01/01/92	12/31/92	0.8746	0.8975
430057 ...	01/01/92	12/31/92	0.9053	0.9839
430060 ...	01/01/92	12/31/92	0.9653	0.8868
430064 ...	12/01/91	11/30/92	1.0825	0.9730
430065 ...	10/01/91	09/30/92	0.9443	0.9555
430073 ...	10/01/91	09/30/92	1.1778	0.9905
430076 ...	01/01/92	12/31/92	1.0042	0.9512
430079 ...	01/01/92	12/31/92	0.9682	0.9635
430080 ...	10/01/91	09/30/92	0.9111	0.9368
430087 ...	01/01/92	12/31/92	0.9635	0.9552
430088 ...	01/01/92	12/31/92	0.9562	0.9774
440008 ...	01/01/92	12/31/92	0.9782	0.9767
440018 ...	11/01/91	10/31/92	1.3250	0.9731
440020 ...	09/30/91	09/30/92	1.2126	0.9711
440034 ...	01/01/92	12/31/92	1.4131	0.9988
440046 ...	01/01/92	12/31/92	1.2539	0.9942
440047 ...	09/01/91	08/31/92	0.8911	0.9601
440048 ...	10/01/91	09/30/92	1.6585	0.9987
440049 ...	01/01/92	12/31/92	1.6549	0.9990
440050 ...	01/01/92	12/31/92	1.1616	0.9868
440058 ...	01/01/92	12/31/92	1.1456	0.9660
440061 ...	10/01/91	09/30/92	1.1785	0.9708
440064 ...	01/01/92	12/31/92	1.0757	0.9730
440067 ...	09/01/91	08/31/92	1.1497	0.9761
440068 ...	10/01/91	09/30/92	1.1549	0.9816
440071 ...	01/01/92	12/31/92	1.3774	0.9981
440072 ...	01/01/92	12/31/92	1.3559	0.9553
440078 ...	10/01/91	09/30/92	1.0232	0.9626
440079 ...	01/01/92	12/31/92	0.8761	0.9713
440081 ...	01/01/92	12/31/92	1.1362	0.9786
440083 ...	01/01/92	12/31/92	1.2372	0.9655
440087 ...	01/01/92	12/31/92	1.0286	0.9447
440091 ...	09/01/91	08/31/92	1.4689	0.9979
440095 ...	01/01/92	12/31/92	1.0287	0.9825
440100 ...	01/01/92	12/31/92	1.1088	0.9594
440105 ...	09/01/91	08/31/92	1.1819	0.9769
440110 ...	01/01/92	12/31/92	1.0081	0.9674
440120 ...	01/01/92	12/31/92	1.4758	0.9993
440125 ...	01/01/92	12/31/92	1.4902	0.9985
440146 ...	01/01/92	12/31/92	0.8519	0.9788
440148 ...	01/01/92	12/31/92	1.1183	0.9652
440149 ...	11/01/91	10/31/92	1.1718	0.9744
440150 ...	01/01/92	12/31/92	1.3026	0.9905
440157 ...	01/01/92	12/31/92	1.0386	0.9625
440161 ...	01/01/92	12/31/92	1.5738	0.9963
440168 ...	01/01/92	12/31/92	1.0282	0.9514
440173 ...	09/01/91	08/31/92	1.4805	0.9952
440174 ...	01/01/92	12/31/92	0.9352	0.9446
440178 ...	09/01/91	08/31/92	1.2405	0.9871
440181 ...	01/01/92	12/31/92	1.0224	0.9602
440182 ...	01/01/92	12/31/92	0.9338	0.9784
440184 ...	01/01/92	12/31/92	1.3411	0.9906
440185 ...	09/01/91	08/31/92	1.1930	0.9906
440186 ...	11/01/91	10/31/92	1.0677	0.9557
440189 ...	08/01/91	07/31/92	1.4475	0.9912
440194 ...	09/01/91	08/31/92	1.3374	0.9767
440196 ...	01/01/92	12/31/92	0.9527	0.9759
440200 ...	12/01/91	11/30/92	1.1802	0.9493
440203 ...	01/01/92	12/31/92	1.0374	0.9795
440205 ...	01/01/92	12/31/92	1.0169	0.9762
450002 ...	01/01/92	12/31/92	1.4552	0.9988
450005 ...	09/01/91	08/31/92	1.0892	0.9737

TABLE 9.—1992 TRANSFER ADJUSTED CASE MIX INDEX AND TRANSFER ADJUSTMENT TO DISCHARGES FOR CAPITAL HOSPITAL-SPECIFIC RATE REDETERMINATIONS—Continued

Provider number	Cost reporting period		Transfer adjusted case mix index	Transfer adjustment to discharges
	Begin	End		
450010 ...	10/01/91	09/30/92	1.2943	0.9968
450011 ...	01/01/92	12/31/92	1.6154	0.9965
450014 ...	01/01/92	12/31/92	1.0762	0.9450
450015 ...	10/01/91	09/30/92	1.4925	0.9978
450016 ...	01/01/92	12/31/92	1.6715	0.9984
450018 ...	09/01/91	08/31/92	1.6393	0.9990
450020 ...	01/01/92	12/31/92	1.0606	0.9624
450024 ...	10/01/91	09/30/92	1.4576	0.9938
450025 ...	01/01/92	12/31/92	1.5180	0.9960
450028 ...	01/01/92	12/31/92	1.3705	0.9925
450032 ...	10/01/91	09/30/92	1.2127	0.9757
450033 ...	09/01/91	08/31/92	1.6230	0.9986
450037 ...	10/01/91	09/30/92	1.4468	0.9984
450039 ...	10/01/91	09/30/92	1.2254	0.9964
450047 ...	10/01/91	09/30/92	1.0490	0.9754
450050 ...	01/01/92	12/31/92	1.1383	0.9697
450053 ...	01/01/92	12/31/92	1.1171	0.9424
450054 ...	09/01/91	08/31/92	1.6828	0.9961
450055 ...	10/01/91	09/30/92	1.1385	0.9625
450058 ...	09/01/91	08/31/92	1.5209	0.9987
450059 ...	01/01/92	12/31/92	1.3689	0.9839
450063 ...	10/01/91	09/30/92	0.9767	0.9477
450065 ...	10/01/91	09/30/92	1.0371	0.9509
450068 ...	10/01/91	09/30/92	1.7296	0.9986
450072 ...	01/01/92	12/31/92	1.1746	0.9702
450073 ...	01/01/92	12/31/92	1.0606	0.9579
450076 ...	09/01/91	08/31/92	1.4351	1.0000
450080 ...	10/01/91	09/30/92	1.2222	0.9674
450081 ...	01/01/92	12/31/92	1.1663	0.9758
450082 ...	10/01/91	09/30/92	0.9844	0.9542
450083 ...	11/01/91	10/31/92	1.6260	0.9914
450085 ...	10/01/91	09/30/92	1.0820	0.9587
450087 ...	09/01/91	08/31/92	1.4192	0.9869
450094 ...	01/01/92	12/31/92	1.2529	0.9847
450097 ...	01/01/92	12/31/92	1.4175	0.9920
450098 ...	11/01/91	10/31/92	1.1052	0.9632
450101 ...	09/01/91	08/31/92	1.4050	0.9973
450104 ...	01/01/92	12/31/92	1.2206	0.9809
450107 ...	01/01/92	12/31/92	1.5156	0.9984
450108 ...	10/01/91	09/30/92	1.0410	0.9348
450110 ...	10/01/91	09/30/92	1.1696	0.9912
450112 ...	01/01/92	12/31/92	1.2456	0.9900
450118 ...	09/01/91	08/31/92	1.4567	0.9989
450119 ...	10/01/91	09/30/92	1.1917	0.9869
450121 ...	10/01/91	09/30/92	1.4028	0.9963
450124 ...	10/01/91	09/30/92	1.4706	0.9983
450127 ...	10/01/91	09/30/92	0.9555	0.9632
450130 ...	01/01/92	12/31/92	1.4583	0.9961
450131 ...	08/01/91	07/31/92	1.2390	0.9916
450132 ...	10/01/91	09/30/92	1.4825	0.9959
450133 ...	10/01/91	09/30/92	1.4868	0.9969
450135 ...	10/01/91	09/30/92	1.6270	0.9975
450137 ...	10/01/91	09/30/92	1.4066	0.9973
450140 ...	10/01/91	09/30/92	0.8672	0.9706
450142 ...	09/01/91	08/31/92	1.4027	0.9903
450144 ...	10/01/91	09/30/92	1.1089	0.9855
450145 ...	01/01/92	12/31/92	0.9603	0.9610
450146 ...	10/01/91	09/30/92	1.0512	0.9504
450148 ...	10/01/91	09/30/92	1.3343	0.9776
450149 ...	11/01/91	10/31/92	1.4172	0.9942
450150 ...	10/01/91	09/30/92	0.9469	0.9591
450151 ...	10/01/91	09/30/92	1.1041	0.9723
450152 ...	10/01/91	09/30/92	1.3966	0.9781
450153 ...	01/01/92	12/31/92	1.5501	0.9987
450154 ...	10/01/91	09/30/92	1.1453	0.9674
450155 ...	10/01/91	09/30/92	1.0219	0.9850
450160 ...	10/01/91	09/30/92	0.9186	0.9473
450162 ...	09/30/91	09/30/92	1.2403	0.9787
450163 ...	01/01/92	12/31/92	1.0470	0.9480
450164 ...	10/01/91	09/30/92	0.9872	0.9788
450165 ...	01/01/92	12/31/92	1.0093	0.9818
450166 ...	01/01/92	12/31/92	0.9427	0.9840
450169 ...	01/01/92	12/31/92	0.8650	0.9148

TABLE 9.—1992 TRANSFER ADJUSTED CASE MIX INDEX AND TRANSFER ADJUSTMENT TO DISCHARGES FOR CAPITAL HOSPITAL-SPECIFIC RATE REDETERMINATIONS—Continued

Provider number	Cost reporting period		Transfer adjusted case mix index	Transfer adjustment to discharges
	Begin	End		
450176 ...	10/01/91	09/30/92	1.2747	0.9825
450178 ...	01/01/92	12/31/92	1.0940	0.9704
450181 ...	01/01/92	12/31/92	0.9824	0.9524
450185 ...	10/01/91	09/30/92	1.0419	0.9101
450187 ...	01/01/92	12/31/92	1.2621	0.9880
450191 ...	01/01/92	12/31/92	1.1441	0.9693
450193 ...	10/01/91	09/30/92	2.1266	0.9993
450194 ...	01/01/92	12/31/92	1.1905	0.9871
450195 ...	01/01/92	12/31/92	1.3052	0.9761
450196 ...	01/01/92	12/31/92	1.3688	0.9941
450197 ...	09/01/91	08/31/92	1.1728	0.9940
450200 ...	10/01/91	09/30/92	1.3768	0.9977
450201 ...	01/01/92	12/31/92	0.9907	0.9600
450203 ...	10/01/91	09/30/92	1.1992	0.9772
450209 ...	10/01/91	09/30/92	1.4517	0.9939
450210 ...	01/01/92	12/31/92	1.0697	0.9565
450211 ...	01/01/92	12/31/92	1.2259	0.9924
450213 ...	01/01/92	12/31/92	1.4268	0.9963
450214 ...	09/01/91	08/31/92	1.3384	0.9812
450224 ...	10/01/91	09/30/92	1.3045	0.9665
450229 ...	09/01/91	08/31/92	1.3705	0.9919
450231 ...	01/01/92	12/31/92	1.5625	0.9991
450234 ...	10/01/91	09/30/92	0.9703	0.9484
450236 ...	10/01/91	09/30/92	1.1503	0.9854
450237 ...	01/01/92	12/31/92	1.5567	0.9963
450239 ...	08/01/91	07/31/92	1.2651	0.9747
450243 ...	09/01/91	08/31/92	0.9175	0.9554
450246 ...	10/01/91	09/30/92	1.0275	0.9602
450253 ...	01/01/92	12/31/92	1.1037	0.9808
450259 ...	01/01/92	12/31/92	1.1609	0.9865
450264 ...	10/01/91	09/30/92	0.8296	0.9523
450271 ...	01/01/92	12/31/92	1.1382	0.9675
450272 ...	01/01/92	12/31/92	1.2826	0.9689
450276 ...	10/01/91	09/30/92	1.0337	0.9623
450280 ...	01/01/92	12/31/92	1.2676	0.9921
450283 ...	11/01/91	10/31/92	1.0145	0.9487
450286 ...	01/01/92	12/31/92	1.0219	0.9769
450292 ...	10/01/91	09/30/92	1.2658	0.9671
450293 ...	01/01/92	12/31/92	0.9865	0.9475
450296 ...	01/01/92	12/31/92	1.2347	0.9750
450297 ...	01/01/92	12/31/92	1.0749	0.9905
450299 ...	09/01/91	08/31/92	1.3453	0.9805
450303 ...	01/01/92	12/31/92	0.9145	0.9624
450306 ...	01/01/92	12/31/92	1.0009	0.9620
450315 ...	09/01/91	08/31/92	1.2631	0.9909
450321 ...	01/01/92	12/31/92	0.8372	0.9467
450322 ...	01/01/92	12/31/92	0.9946	0.9535
450327 ...	10/01/91	09/30/92	1.0735	0.9711
450334 ...	10/01/91	09/30/92	1.0526	0.9970
450337 ...	11/01/91	10/31/92	1.1152	0.9706
450340 ...	01/01/92	12/31/92	1.3402	0.9904
450346 ...	09/01/91	08/31/92	1.3123	0.9963
450347 ...	01/01/92	12/31/92	1.1665	0.9759
450348 ...	09/01/91	08/31/92	0.9993	0.9704
450352 ...	10/01/91	09/30/92	1.2165	0.9578
450353 ...	09/01/91	08/31/92	1.1849	0.9509
450355 ...	08/01/91	07/31/92	1.1345	0.9505
450358 ...	01/01/92	12/31/92	1.9941	0.9984
450365 ...	01/01/92	12/31/92	0.8918	0.9880
450369 ...	10/01/91	09/30/92	1.1056	0.9663
450371 ...	01/01/92	12/31/92	1.1127	0.9878
450373 ...	11/01/91	10/31/92	1.1958	0.9654
450374 ...	10/01/91	09/30/92	0.7739	0.9268
450378 ...	09/01/91	08/31/92	1.2620	0.9894
450388 ...	10/01/91	09/30/92	1.6764	0.9982
450389 ...	11/01/91	10/31/92	1.2062	0.9789
450399 ...	10/01/91	09/30/92	0.9551	0.9650
450403 ...	10/01/91	09/30/92	1.2863	0.9868
450417 ...	01/01/92	12/31/92	1.0511	0.9469
450419 ...	10/01/91	09/30/92	1.2174	0.9694
450422 ...	10/01/91	09/30/92	0.7213	0.9919
450423 ...	09/01/91	08/31/92	1.2884	0.9767
450424 ...	01/01/92	12/31/92	1.2831	0.9854

TABLE 9.—1992 TRANSFER ADJUSTED CASE MIX INDEX AND TRANSFER ADJUSTMENT TO DISCHARGES FOR CAPITAL HOSPITAL-SPECIFIC RATE REDETERMINATIONS—Continued

Provider number	Cost reporting period		Transfer adjusted case mix index	Transfer adjustment to discharges
	Begin	End		
450429 ...	12/01/91	11/30/92	0.9062	0.9677
450431 ...	01/01/92	12/31/92	1.5794	0.9980
450438 ...	01/01/92	12/31/92	1.0271	0.9530
450446 ...	01/01/92	12/31/92	0.9213	1.0000
450450 ...	10/01/91	09/30/92	1.0028	0.9685
450462 ...	10/01/91	09/30/92	1.7181	0.9979
450464 ...	10/01/91	09/30/92	0.9553	0.9568
450465 ...	10/01/91	09/30/92	1.2167	0.9839
450475 ...	10/01/91	09/30/92	1.1450	0.9782
450484 ...	09/01/91	08/31/92	1.5170	0.9935
450488 ...	10/01/91	09/30/92	1.2310	0.9694
450514 ...	01/01/92	12/31/92	1.0949	0.9797
450518 ...	01/01/92	12/31/92	1.3403	0.9900
450523 ...	01/01/92	12/31/92	1.6219	0.9919
450530 ...	12/01/91	11/30/92	1.2990	0.9828
450534 ...	10/01/91	09/30/92	0.9778	0.9615
450535 ...	01/01/92	12/31/92	1.2535	0.9909
450538 ...	01/01/92	12/31/92	1.1910	0.9700
450544 ...	08/01/91	07/31/92	1.2722	0.9957
450547 ...	10/01/91	09/30/92	0.9612	0.9518
450550 ...	01/01/92	12/31/92	1.0915	0.9902
450558 ...	09/01/91	08/31/92	1.7969	0.9969
450559 ...	10/01/91	09/30/92	0.9908	0.9265
450561 ...	10/01/91	09/30/92	1.5975	0.9971
450565 ...	10/01/91	09/30/92	1.2870	0.9823
450571 ...	10/01/91	09/30/92	1.4701	0.9984
450574 ...	10/01/91	09/30/92	0.9578	0.9575
450575 ...	10/01/91	09/30/92	0.9522	0.9737
450578 ...	10/01/91	09/30/92	0.9863	0.9897
450580 ...	10/01/91	09/30/92	1.1296	0.9754
450583 ...	10/01/91	09/30/92	0.9610	0.9779
450584 ...	10/01/91	09/30/92	1.2060	0.9708
450587 ...	09/01/91	08/31/92	1.3063	0.9841
450591 ...	10/01/91	09/30/92	1.1351	0.9771
450596 ...	10/01/91	09/30/92	1.3229	0.9696
450597 ...	10/01/91	09/30/92	1.0558	0.9778
450604 ...	01/01/92	12/31/92	1.2804	0.9750
450605 ...	01/01/92	12/31/92	1.2912	0.9857
450607 ...	10/01/91	09/30/92	0.9172	0.9625
450609 ...	10/01/91	09/30/92	0.8863	0.9754
450614 ...	10/01/91	09/30/92	1.1170	0.9245
450615 ...	01/01/92	12/31/92	0.9708	0.9588
450617 ...	09/01/91	08/31/92	1.3752	0.9934
450623 ...	10/01/91	09/30/92	1.1443	0.9511
450626 ...	10/01/91	09/30/92	0.9677	0.9263
450628 ...	10/01/91	09/30/92	0.9691	0.9732
450631 ...	09/01/91	08/31/92	1.6383	0.9978
450632 ...	10/01/91	09/30/92	0.9953	0.9552
450633 ...	09/01/91	08/31/92	1.5283	0.9963
450634 ...	01/01/92	12/31/92	1.3966	0.9935
450637 ...	09/01/91	08/31/92	1.2903	0.9838
450639 ...	10/01/91	09/30/92	1.5471	0.9973
450644 ...	09/01/91	08/31/92	1.6651	0.9918
450646 ...	01/01/92	12/31/92	1.5928	0.9972
450647 ...	09/01/91	08/31/92	1.9394	0.9986
450648 ...	10/01/91	09/30/92	1.0943	0.9738
450652 ...	10/01/91	09/30/92	0.9343	0.9464
450654 ...	10/01/91	09/30/92	0.9626	0.9893
450656 ...	01/01/92	12/31/92	1.3794	0.9936
450659 ...	01/01/92	12/31/92	1.4566	0.9972
450661 ...	01/01/92	12/31/92	1.2854	0.9970
450662 ...	09/01/91	08/31/92	1.4017	0.9891
450666 ...	09/01/91	08/31/92	1.2448	0.9891
450672 ...	08/01/91	07/31/92	1.6184	0.9989
450673 ...	10/01/91	09/30/92	1.0376	0.9796
450677 ...	01/01/92	12/31/92	1.2607	0.9940
450683 ...	10/01/91	09/30/92	1.3273	0.9779
450690 ...	09/01/91	08/31/92	1.3373	0.9960
450696 ...	11/01/91	10/31/92	1.2387	1.0000
450697 ...	01/01/92	12/31/92	1.4012	0.9920
450700 ...	01/01/92	12/31/92	0.8936	0.9617
450702 ...	09/01/91	08/31/92	1.3247	0.9901
450703 ...	01/01/92	12/31/92	1.4539	0.9898

TABLE 9.—1992 TRANSFER ADJUSTED CASE MIX INDEX AND TRANSFER ADJUSTMENT TO DISCHARGES FOR CAPITAL HOSPITAL-SPECIFIC RATE REDETERMINATIONS—Continued

Provider number	Cost reporting period		Transfer adjusted case mix index	Transfer adjustment to discharges
	Begin	End		
450705 ...	10/01/91	09/30/92	0.7704	1.0000
450706 ...	01/01/92	12/31/92	1.1861	0.9656
450711 ...	10/01/91	09/30/92	1.6961	0.9968
450712 ...	11/01/91	10/31/92	0.7991	1.0000
450713 ...	01/01/92	12/31/92	1.3301	0.9934
450715 ...	09/01/91	08/31/92	1.3403	0.9940
450716 ...	01/01/92	12/31/92	1.2429	0.9742
450717 ...	01/01/92	12/31/92	1.2749	0.9797
450718 ...	01/01/92	12/31/92	1.1745	0.9815
450724 ...	01/01/92	12/31/92	1.1751	0.9955
450725 ...	09/01/91	08/31/92	1.0337	1.0000
450726 ...	10/01/91	09/30/92	0.8454	0.9659
450727 ...	10/01/91	09/30/92	0.9185	0.9722
450728 ...	10/01/91	09/30/92	0.8538	0.9194
450729 ...	01/01/92	12/31/92	1.0219	1.0000
450733 ...	09/01/91	08/31/92	1.3711	0.9837
450734 ...	09/01/91	08/31/92	1.2011	1.0000
450735 ...	01/01/92	12/31/92	0.8125	0.9110
450745 ...	01/01/92	12/31/92	0.9314	0.9684
450746 ...	10/01/91	09/30/92	0.8587	0.8419
450747 ...	01/01/92	12/31/92	1.2963	0.9848
450751 ...	01/01/92	12/31/92	1.1967	0.9655
450754 ...	10/01/91	09/30/92	0.9322	0.9755
450757 ...	01/01/92	12/31/92	0.9324	0.9235
450761 ...	10/01/91	09/30/92	1.0579	0.9770
450763 ...	10/01/91	09/30/92	1.0765	0.9697
450765 ...	01/01/92	12/31/92	0.9863	0.9851
450766 ...	01/01/92	12/31/92	1.6658	0.9986
460001 ...	01/01/92	12/31/92	1.6587	0.9966
460004 ...	01/01/92	12/31/92	1.7745	0.9960
460006 ...	01/01/92	12/31/92	1.2522	0.9877
460007 ...	01/01/92	12/31/92	1.4770	0.9630
460010 ...	01/01/92	12/31/92	1.9731	0.9996
460011 ...	01/01/92	12/31/92	1.4211	0.9630
460013 ...	09/01/91	08/31/92	1.4685	0.9865
460014 ...	01/01/92	12/31/92	1.0944	0.9421
460015 ...	01/01/92	12/31/92	1.2491	0.9736
460016 ...	01/01/92	12/31/92	0.9306	0.9636
460017 ...	09/01/91	08/31/92	1.3058	0.9627
460018 ...	01/01/92	12/31/92	0.9545	0.9617
460019 ...	01/01/92	12/31/92	0.9542	0.9556
460020 ...	01/01/92	12/31/92	1.0005	0.9594
460021 ...	01/01/92	12/31/92	1.4011	0.9925
460022 ...	01/01/92	12/31/92	0.9265	0.9901
460023 ...	01/01/92	12/31/92	1.1746	0.9694
460024 ...	10/01/91	09/30/92	0.9938	0.9704
460025 ...	01/01/92	12/31/92	0.7762	1.0000
460026 ...	01/01/92	12/31/92	0.9597	0.9480
460027 ...	01/01/92	12/31/92	0.9496	1.0000
460029 ...	01/01/92	12/31/92	1.1287	0.8929
460033 ...	01/01/92	12/31/92	1.0269	0.8904
460036 ...	01/01/92	12/31/92	0.9989	0.8970
460039 ...	01/01/92	12/31/92	0.8621	0.9418
460041 ...	09/01/91	08/31/92	1.2272	0.9776
460042 ...	10/01/91	09/30/92	1.4468	0.9870
460043 ...	01/01/92	12/31/92	1.4123	0.9548
460044 ...	01/01/92	12/31/92	1.1685	0.9625
460046 ...	01/01/92	12/31/92	1.4828	0.9487
460047 ...	11/01/91	10/31/92	1.6790	0.9991
470001 ...	10/01/91	09/30/92	1.1527	0.9781
470003 ...	10/01/91	09/30/92	1.9456	0.9983
470004 ...	10/01/91	09/30/92	1.0530	0.9879
470005 ...	10/01/91	09/30/92	1.2232	0.9898
470006 ...	10/01/91	09/30/92	1.1761	0.9764
470008 ...	10/01/91	09/30/92	1.1594	0.9873
470010 ...	10/01/91	09/30/92	1.0595	0.9597
470011 ...	10/01/91	09/30/92	1.2377	0.9868
470012 ...	10/01/91	09/30/92	1.2410	0.9888
470013 ...	10/01/91	09/30/92	1.1331	0.9859
470015 ...	10/01/91	09/30/92	1.2366	0.9937
470018 ...	10/01/91	09/30/92	1.1658	0.9787
470020 ...	10/01/91	09/30/92	0.9977	0.9795
470023 ...	10/01/91	09/30/92	1.2092	0.9631

TABLE 9.—1992 TRANSFER ADJUSTED CASE MIX INDEX AND TRANSFER ADJUSTMENT TO DISCHARGES FOR CAPITAL HOSPITAL-SPECIFIC RATE REDETERMINATIONS—Continued

Provider number	Cost reporting period		Transfer adjusted case mix index	Transfer adjustment to discharges
	Begin	End		
470024 ...	10/01/91	09/30/92	1.0986	0.9517
490001 ...	10/01/91	09/30/92	1.0787	0.9760
490003 ...	10/01/91	09/30/92	0.6321	1.0000
490004 ...	01/01/92	12/31/92	1.2371	0.9901
490005 ...	01/01/92	12/31/92	1.4687	0.9966
490006 ...	10/01/91	09/30/92	1.1263	0.9802
490008 ...	01/01/92	12/31/92	1.1786	0.9924
490011 ...	01/01/92	12/31/92	1.3507	0.9939
490012 ...	08/01/91	07/31/92	1.0161	0.9680
490013 ...	09/01/91	08/31/92	1.1436	0.9846
490014 ...	01/01/92	12/31/92	1.7045	0.9895
490017 ...	09/01/91	08/31/92	1.3140	0.9881
490018 ...	01/01/92	12/31/92	1.1227	0.9741
490019 ...	10/01/91	09/30/92	1.1077	0.9744
490020 ...	01/01/92	12/31/92	1.1155	0.9769
490021 ...	01/01/92	12/31/92	1.4379	0.9968
490023 ...	10/01/91	09/30/92	1.2136	0.9937
490024 ...	10/01/91	09/30/92	1.6750	0.9988
490027 ...	10/01/91	09/30/92	1.0367	0.9867
490030 ...	10/01/91	09/30/92	1.3237	0.9952
490031 ...	01/01/92	12/31/92	1.0203	0.9696
490033 ...	01/01/92	12/31/92	1.1696	0.9706
490037 ...	01/01/92	12/31/92	1.1836	0.9833
490038 ...	10/01/91	09/30/92	1.2311	0.9849
490040 ...	09/30/91	09/28/92	1.4066	0.9959
490041 ...	01/01/92	12/31/92	1.1985	0.9881
490042 ...	10/01/91	09/30/92	1.2605	0.9843
490044 ...	10/01/91	09/30/92	1.2502	0.9890
490045 ...	10/01/91	09/30/92	1.1678	0.9931
490047 ...	10/01/91	09/30/92	1.0939	0.9692
490048 ...	01/01/92	12/31/92	1.4672	0.9987
490050 ...	01/01/92	12/31/92	1.3543	0.9968
490052 ...	01/01/92	12/31/92	1.5030	0.9992
490054 ...	10/01/91	09/30/92	1.0337	0.9726
490057 ...	01/01/92	12/31/92	1.4605	0.9998
490059 ...	09/01/91	08/31/92	1.4553	0.9993
490060 ...	09/01/91	08/31/92	1.0516	0.9904
490063 ...	01/01/92	12/31/92	1.6108	0.9982
490066 ...	01/01/92	12/31/92	1.2128	0.9671
490067 ...	01/01/92	12/31/92	1.2473	0.9889
490069 ...	10/01/91	09/30/92	1.3757	0.9980
490071 ...	01/01/92	12/31/92	1.4783	0.9986
490073 ...	09/01/91	08/31/92	1.4037	0.9887
490074 ...	01/01/92	12/31/92	1.3425	0.9926
490075 ...	01/01/92	12/31/92	1.2781	0.9907
490077 ...	10/01/91	09/30/92	1.1940	0.9929
490079 ...	01/01/92	12/31/92	1.2893	0.9850
490083 ...	10/01/91	09/30/92	0.7056	0.9852
490084 ...	01/01/92	12/31/92	1.1111	0.9333
490085 ...	10/01/91	09/30/92	1.1507	0.9677
490088 ...	10/01/91	09/30/92	1.1365	0.9709
490089 ...	10/01/91	09/30/92	1.0924	0.9716
490091 ...	10/01/91	09/30/92	1.1667	0.9931
490092 ...	01/01/92	12/31/92	1.2033	0.9766
490095 ...	01/01/92	12/31/92	1.2460	0.9851
490097 ...	09/01/91	08/31/92	1.1009	0.9856
490099 ...	09/01/91	08/31/92	0.9600	0.9758
490100 ...	10/01/91	09/30/92	1.3428	0.9972
490101 ...	01/01/92	12/31/92	1.1177	0.9887
490107 ...	01/01/92	12/31/92	1.1994	0.9895
490110 ...	10/01/91	09/30/92	1.2451	0.9923
490112 ...	09/01/91	08/31/92	1.5170	0.9985
490113 ...	11/01/91	10/31/92	1.2885	0.9647
490115 ...	10/01/91	09/30/92	1.2326	0.9804
490116 ...	09/01/91	08/31/92	1.1784	0.9799
490117 ...	12/01/91	11/30/92	1.1290	0.9919
490122 ...	01/01/92	12/31/92	1.2064	0.9918
490126 ...	10/01/91	09/30/92	1.2154	0.9826
490129 ...	01/01/92	12/31/92	0.8523	1.0000
490130 ...	01/01/92	12/31/92	1.1883	0.9845
500001 ...	01/01/92	12/31/92	1.2875	0.9810
500002 ...	01/01/92	12/31/92	1.4518	0.9951
500003 ...	01/01/92	12/31/92	1.2616	0.9858

TABLE 9.—1992 TRANSFER ADJUSTED CASE MIX INDEX AND TRANSFER ADJUSTMENT TO DISCHARGES FOR CAPITAL HOSPITAL-SPECIFIC RATE REDETERMINATIONS—Continued

Provider number	Cost reporting period		Transfer adjusted case mix index	Transfer adjustment to discharges
	Begin	End		
500005 ...	01/01/92	12/31/92	1.7267	0.9980
500007 ...	01/01/92	12/31/92	1.2956	0.9739
500009 ...	01/01/92	12/31/92	1.2949	0.9903
500011 ...	01/01/92	12/31/92	1.2546	0.9865
500012 ...	01/01/92	12/31/92	1.5006	0.9970
500014 ...	01/01/92	12/31/92	1.7497	0.9972
500015 ...	01/01/92	12/31/92	1.2786	0.9847
500016 ...	01/01/92	12/31/92	1.3410	0.9896
500019 ...	01/01/92	12/31/92	1.2609	0.9718
500024 ...	01/01/92	12/31/92	1.5708	0.9966
500025 ...	01/01/92	12/31/92	1.8509	0.9990
500026 ...	01/01/92	12/31/92	1.3634	0.9883
500027 ...	01/01/92	12/31/92	1.5397	0.9982
500028 ...	01/01/92	12/31/92	1.0850	0.9787
500029 ...	01/01/92	12/31/92	1.0380	0.9575
500031 ...	01/01/92	12/31/92	1.2662	0.9606
500033 ...	01/01/92	12/31/92	1.2411	0.9657
500035 ...	01/01/92	12/31/92	1.5169	0.9915
500036 ...	11/01/91	10/31/92	1.2648	0.9919
500037 ...	01/01/92	12/31/92	1.2075	0.9864
500042 ...	01/01/92	12/31/92	1.3443	0.9842
500043 ...	01/01/92	12/31/92	1.1551	0.9304
500044 ...	01/01/92	12/31/92	1.8874	0.9990
500045 ...	01/01/92	12/31/92	1.1343	0.9859
500048 ...	08/01/91	07/30/92	0.9105	0.9742
500049 ...	01/01/92	12/31/92	1.2088	0.9897
500050 ...	10/01/91	09/30/92	1.3141	0.9907
500051 ...	10/01/91	09/30/92	1.6114	0.9965
500052 ...	01/01/92	12/31/92	1.2418	0.9949
500053 ...	01/01/92	12/31/92	1.2641	0.9838
500054 ...	01/01/92	12/31/92	1.8848	0.9991
500055 ...	08/01/91	07/31/92	1.1042	0.9626
500057 ...	10/01/91	09/30/92	1.3290	0.9920
500058 ...	01/01/92	12/31/92	1.5264	0.9832
500059 ...	01/01/92	12/31/92	1.1129	0.9333
500060 ...	01/01/92	12/31/92	1.3106	0.9738
500061 ...	01/01/92	12/31/92	1.0114	0.9513
500062 ...	01/01/92	12/31/92	0.9607	0.9418
500065 ...	01/01/92	12/31/92	1.2108	0.9654
500068 ...	01/01/92	12/31/92	1.0058	0.9907
500069 ...	01/01/92	12/31/92	1.0480	0.9196
500071 ...	01/01/92	12/31/92	1.3591	0.9656
500072 ...	01/01/92	12/31/92	1.1894	0.9782
500073 ...	01/01/92	12/31/92	0.9775	0.9524
500074 ...	01/01/92	12/31/92	1.1989	0.9839
500075 ...	01/01/92	12/31/92	1.1502	0.9790
500077 ...	08/01/91	07/31/92	1.2469	0.9909
500078 ...	11/01/91	10/31/92	1.2447	0.9925
500079 ...	10/01/91	09/30/92	1.2255	0.9799
500080 ...	01/01/92	12/31/92	0.8745	0.9518
500084 ...	01/01/92	12/31/92	1.1145	0.9858
500085 ...	01/01/92	12/31/92	1.0553	0.9610
500088 ...	01/01/92	12/31/92	1.3013	0.9926
500089 ...	01/01/92	12/31/92	0.9321	0.9718
500090 ...	01/01/92	12/31/92	0.9456	0.9323
500092 ...	01/01/92	12/31/92	1.1068	0.9628
500094 ...	01/01/92	12/31/92	0.9138	0.9429
500096 ...	01/01/92	12/31/92	0.9918	0.9324
500097 ...	01/01/92	12/31/92	1.1954	0.9319
500098 ...	01/01/92	12/31/92	0.8916	0.9732
500101 ...	01/01/92	12/31/92	0.9458	0.9790
500102 ...	01/01/92	12/31/92	0.9799	0.9830
500106 ...	01/01/92	12/31/92	1.0885	0.9848
500107 ...	01/01/92	12/31/92	1.0946	0.9800
500110 ...	01/01/92	12/31/92	1.2239	0.9659
500118 ...	01/01/92	12/31/92	1.1656	0.9516
500119 ...	01/01/92	12/31/92	1.3258	0.9849
500122 ...	01/01/92	12/31/92	1.2809	0.9735
500123 ...	01/01/92	12/31/92	0.9590	1.0000
500124 ...	01/01/92	12/31/92	1.2880	0.9839
500125 ...	01/01/92	12/31/92	0.9825	0.9569
500129 ...	01/01/92	12/31/92	1.6946	0.9973
500132 ...	01/01/92	12/31/92	0.9196	0.9682

TABLE 9.—1992 TRANSFER ADJUSTED CASE MIX INDEX AND TRANSFER ADJUSTMENT TO DISCHARGES FOR CAPITAL HOSPITAL-SPECIFIC RATE REDETERMINATIONS—Continued

Provider number	Cost reporting period		Transfer adjusted case mix index	Transfer adjustment to discharges
	Begin	End		
500134 ...	01/01/92	12/31/92	0.6828	0.9984
500140 ...	10/01/91	09/30/92	1.2302	1.0000
500143 ...	01/01/92	12/31/92	0.7104	1.0000
510001 ...	01/01/92	12/31/92	1.6124	0.9957
510002 ...	09/01/91	08/31/92	1.2852	0.9761
510004 ...	11/01/91	10/31/92	0.9662	0.9258
510005 ...	01/01/92	12/31/92	0.9515	0.9562
510006 ...	10/01/91	09/30/92	1.2544	0.9904
510007 ...	10/01/91	09/30/92	1.4173	0.9998
510008 ...	01/01/92	12/31/92	1.0901	0.9915
510009 ...	01/01/92	12/31/92	0.9843	0.9779
510012 ...	10/01/91	09/30/92	1.0164	0.9839
510013 ...	10/01/91	09/30/92	1.1245	0.9979
510016 ...	01/01/92	12/31/92	1.0155	0.9701
510018 ...	10/01/91	09/30/92	1.0571	0.9748
510022 ...	01/01/92	12/31/92	1.6722	0.9989
510029 ...	10/01/91	09/30/92	1.3002	0.9916
510030 ...	10/01/91	09/30/92	1.1164	0.9941
510031 ...	01/01/92	12/31/92	1.3484	0.9897
510033 ...	01/01/92	12/31/92	1.2654	0.9912
510038 ...	10/01/91	09/30/92	1.0505	0.9709
510039 ...	01/01/92	12/31/92	1.3629	0.9942
510040 ...	01/01/92	12/31/92	1.1382	1.0000
510047 ...	01/01/92	12/31/92	1.1408	0.9894
510048 ...	01/01/92	12/31/92	1.1200	0.9893
510050 ...	10/01/91	09/30/92	1.2395	0.9914
510053 ...	10/01/91	09/30/92	0.9759	0.9567
510055 ...	10/01/91	09/30/92	1.1883	0.9961
510059 ...	01/01/92	12/31/92	1.2882	1.0000
510060 ...	09/01/91	08/31/92	1.1590	0.9870
510063 ...	01/01/92	12/31/92	1.0502	0.9782
510065 ...	01/01/92	12/31/92	0.9797	0.9669
510066 ...	01/01/92	12/31/92	1.1210	0.9886
510067 ...	09/01/91	08/31/92	1.2017	0.9914
510068 ...	10/01/91	09/30/92	1.1045	0.9742
510076 ...	01/01/92	12/31/92	0.8875	0.9751
510077 ...	10/01/91	09/30/92	1.1806	0.9889
510081 ...	10/01/91	09/30/92	1.0126	0.9817
510082 ...	01/01/92	12/31/92	0.9942	0.9695
510084 ...	01/01/92	12/31/92	0.9983	0.9737
510085 ...	10/01/91	09/30/92	1.2929	0.9864
520002 ...	10/01/91	09/30/92	1.2685	0.9712
520003 ...	01/01/92	12/31/92	1.1428	0.9721
520008 ...	10/01/91	09/30/92	1.3626	0.9965
520010 ...	01/01/92	12/31/92	1.1352	0.9360
520012 ...	10/01/91	09/30/92	0.9616	0.9768
520014 ...	10/01/91	09/30/92	1.1206	0.9821
520018 ...	10/01/91	09/30/92	1.0257	0.9685
520019 ...	10/01/91	09/30/92	1.3041	0.9786
520021 ...	10/01/91	09/30/92	1.2221	0.9899
520024 ...	10/01/91	09/30/92	1.0987	0.9751
520026 ...	01/01/92	12/31/92	1.0609	0.9713
520029 ...	10/01/91	09/30/92	0.9437	0.9629
520031 ...	10/01/91	09/30/92	1.1075	0.9790
520032 ...	10/01/91	09/30/92	1.1876	0.9673
520033 ...	09/01/91	08/30/92	1.2231	0.9620
520034 ...	10/01/91	09/30/92	1.1980	0.9641
520035 ...	01/01/92	12/31/92	1.2381	0.9870
520037 ...	10/01/91	09/30/92	1.6047	0.9993
520038 ...	01/01/92	12/31/92	1.3106	0.9724
520039 ...	01/01/92	12/31/92	1.0205	0.9506
520042 ...	10/01/91	09/30/92	1.1168	0.9755
520045 ...	01/01/92	12/31/92	1.6726	0.9981
520048 ...	10/01/91	09/30/92	1.3964	0.9948
520049 ...	10/01/91	09/30/92	1.9158	0.9966
520053 ...	01/01/92	12/31/92	1.0308	0.9393
520054 ...	01/01/92	12/31/92	1.0893	0.9816
520056 ...	10/01/91	09/30/92	1.2947	0.9893
520057 ...	01/01/92	12/31/92	1.1666	0.9791
520058 ...	10/01/91	09/30/92	1.0808	0.9717
520059 ...	10/01/91	09/30/92	1.2014	0.9752
520060 ...	10/01/91	09/30/92	1.2270	0.9655
520062 ...	10/01/91	09/30/92	1.2125	0.9647

TABLE 9.—1992 TRANSFER ADJUSTED CASE MIX INDEX AND TRANSFER ADJUSTMENT TO DISCHARGES FOR CAPITAL HOSPITAL-SPECIFIC RATE REDETERMINATIONS—Continued

Provider number	Cost reporting period		Transfer adjusted case mix index	Transfer adjustment to discharges
	Begin	End		
520064 ...	12/29/91	12/27/92	1.5587	0.9921
520069 ...	01/01/92	12/31/92	1.1805	0.9897
520070 ...	01/01/92	12/31/92	1.3924	0.9836
520071 ...	10/01/91	09/30/92	1.1535	0.9725
520077 ...	10/01/91	09/30/92	0.9922	0.9519
520078 ...	01/01/92	12/31/92	1.4302	0.9967
520082 ...	08/01/91	07/31/92	1.2916	0.9825
520083 ...	01/01/92	12/31/92	1.5742	0.9990
520084 ...	10/01/91	09/30/92	1.0770	0.9816
520089 ...	01/01/92	12/31/92	1.5293	0.9964
520090 ...	10/01/91	09/30/92	1.1716	0.9577
520095 ...	01/01/92	12/31/92	1.3811	0.9704
520100 ...	01/01/92	12/31/92	1.2615	0.9845
520101 ...	10/01/91	09/30/92	1.1426	0.9619
520102 ...	01/01/92	12/31/92	1.2112	0.9637
520103 ...	10/01/91	09/30/92	1.3418	0.9784
520107 ...	01/01/92	12/31/92	1.2694	0.9835

TABLE 9.—1992 TRANSFER ADJUSTED CASE MIX INDEX AND TRANSFER ADJUSTMENT TO DISCHARGES FOR CAPITAL HOSPITAL-SPECIFIC RATE REDETERMINATIONS—Continued

Provider number	Cost reporting period		Transfer adjusted case mix index	Transfer adjustment to discharges
	Begin	End		
520109 ...	10/01/91	09/30/92	1.0144	0.9764
520110 ...	01/01/92	12/31/92	1.0834	0.9837
520113 ...	10/01/91	09/30/92	1.1841	0.9712
520115 ...	10/01/91	09/30/92	1.2398	0.9728
520116 ...	10/01/91	09/30/92	1.2326	0.9723
520117 ...	09/01/91	08/31/92	1.0924	0.9472
520118 ...	01/01/92	12/31/92	0.9694	0.9435
520123 ...	10/01/91	09/30/92	1.0192	0.9558
520130 ...	10/01/91	09/30/92	0.9756	0.9506
520131 ...	01/01/92	12/31/92	1.0530	0.9345
520135 ...	01/01/92	12/31/92	0.9756	0.9487
520138 ...	12/29/91	12/27/92	1.8410	0.9988
520139 ...	09/02/91	08/30/92	1.2562	0.9838
520140 ...	01/01/92	12/31/92	1.5116	0.9976
520144 ...	10/01/91	09/30/92	1.0360	0.9639
520145 ...	01/01/92	12/31/92	0.9855	0.9910
520146 ...	01/01/92	12/31/92	1.1186	0.9659

TABLE 9.—1992 TRANSFER ADJUSTED CASE MIX INDEX AND TRANSFER ADJUSTMENT TO DISCHARGES FOR CAPITAL HOSPITAL-SPECIFIC RATE REDETERMINATIONS—Continued

Provider number	Cost reporting period		Transfer adjusted case mix index	Transfer adjustment to discharges
	Begin	End		
520148 ...	01/01/92	12/31/92	1.0822	0.9627
520149 ...	01/01/92	12/31/92	1.0505	0.9174
520152 ...	10/01/91	09/30/92	1.1367	0.9597
520153 ...	10/01/91	09/30/92	1.0092	0.9475
520154 ...	10/01/91	09/30/92	1.1106	0.9683
520156 ...	01/01/92	12/31/92	1.0433	0.9538
520157 ...	01/01/92	12/31/92	1.0208	0.9449
520160 ...	01/01/92	12/31/92	1.7582	0.9969
520171 ...	01/01/92	12/31/92	0.9871	0.9706
520173 ...	10/01/91	09/30/92	1.1001	0.9760
520174 ...	01/01/92	12/31/92	1.4154	0.9915
520177 ...	01/01/92	12/31/92	1.5240	0.9939
530007 ...	07/01/91	07/30/92	1.0702	0.9474
530008 ...	01/01/92	12/31/92	1.2141	0.9706
530010 ...	01/01/92	12/31/92	1.2472	0.9791
530023 ...	01/01/92	12/31/92	0.9519	0.9302
530032 ...	01/01/92	12/31/92	1.3032	0.9781

TABLE 10.—PERCENTAGE DIFFERENCE IN WAGE INDEXES FOR AREAS THAT QUALIFY FOR A WAGE INDEX EXCEPTION FOR EXCLUDED HOSPITALS AND UNITS

Area	1982–1990 percentage difference	1984–1990 percentage difference	1988–1990 percentage difference
Rural Connecticut	21.008	23.410	
Rural Hawaii		20.984	11.094
Rural Maryland		8.298	
Rural Massachusetts	17.936	21.776	
Rural New Hampshire		9.265	
Rural Puerto Rico			26.493
Aguadilla, PR		20.475	20.976
Albany, GA		9.126	
Alexandria, LA		8.018	10.431
Ann Arbor, MI		11.235	13.051
Bergen-Passaic, NJ			9.840
Boston-Lowell-Brockton-Lawrence-Salem, MA		9.785	
Bridgeport-Stamford-Norwalk-Danbury, CT		10.518	
Burlington, NC		8.423	
Caguas, PR		19.104	
Charlotte-Gastonia-Rock Hill, NC–SC	8.274	15.347	
Decatur, AL		8.207	
El Paso, TX			9.447
Florence, SC	13.823	12.656	
Greensboro-Winston-Salem-High Point, NC		9.325	
Hartford-Middletown-New Britain, CT		10.032	
Hickory, NC		8.487	
Houma-Thibodaux, LA			8.756
Killeen-Temple, TX	15.947		
Knoxville, TN		12.229	
Las Cruse, NM			12.784
Macon-Warner Robins, GA		24.478	10.225
Manchester-Nashua, NH	11.187	12.561	
Mayaguez, PR		12.354	13.107
McAllen-Edinburg-Mission, TX		10.757	10.140
Middlesex-Somerset-Hunterdon, NJ		9.810	
Monmouth-Ocean, NJ		9.503	
Nassau-Suffolk, NY		11.597	
New Bedford-Fall River-Attleboro, MA	10.877	13.672	
New Haven-West Haven-Waterbury, CT	8.376	12.593	
New London-Norwich, CT		8.033	
Newark, NJ		9.900	
Omaha, NE–IA			10.359
Orange County, NY	10.959	15.011	
Orlando, FL		8.176	
Pine Bluff, AR	9.779	9.160	10.712

TABLE 10.—PERCENTAGE DIFFERENCE IN WAGE INDEXES FOR AREAS THAT QUALIFY FOR A WAGE INDEX EXCEPTION FOR EXCLUDED HOSPITALS AND UNITS—Continued

Area	1982–1990 percentage difference	1984–1990 percentage difference	1988–1990 percentage difference
Pittsfield, MA	8.333		
Ponce, PR			9.466
Portsmouth-Dover-Rochester, NH	8.979		
Poughkeepsie, NY		9.303	
Providence-Pawtucket-Woonsocket, RI		10.139	
Redding, CA		17.503	10.181
Riverside-San Bernardino, CA			8.684
Santa Fe, NM			9.271
Victoria, TX	9.791	8.340	
West Palm Beach-Boca Raton-Delray Beach, FL		8.361	
Wilmington, NC		11.530	
Worcester-Fitchburg-Leominster, MA		11.702	
Yuma, AZ			8.242

Appendix A—Regulatory Impact Analysis

I. Introduction

Executive Order (E.O.) 12291 requires us to prepare and publish an initial regulatory impact analysis for any final rule that meets one of the E.O. 12291 criteria for a "major rule," that is, a rule that would be likely to result in—

- An annual effect on the economy of $100 million or more;
- A major increase in costs or prices for consumers, individual industries, Federal, State, or local government agencies, or geographic regions; or
- A significant adverse effect on competition, employment, investment, productivity, innovation, or on the ability of United States-based enterprises to compete with foreign-based enterprises in domestic or export markets.

In addition, we generally prepare a regulatory flexibility analysis that is consistent with the Regulatory Flexibility Act (RFA) (5 U.S.C. 601 through 612), unless the Secretary certifies that a final rule would not have a significant economic impact on a substantial number of small entities. For purposes of the RFA, we consider all hospitals to be small entities.

Also, section 1102(b) of the Act requires the Secretary to prepare a regulatory impact analysis for any final rule that may have a significant impact on the operations of a substantial number of small rural hospitals. Such an analysis must conform to the provisions of section 603 of the RFA. With the exception of hospitals located in certain New England counties, for purposes of section 1102(b) of the Act, we define a small rural hospital as a hospital with fewer than 100 beds that is located outside of a Metropolitan Statistical Area or New England County Metropolitan Area.

Section 601(g) of the Social Security Amendments of 1983 (Pub. L. 98–21) designated hospitals in certain New England counties as belonging to the adjacent New England Metropolitan County. Thus, for purposes of the prospective payment system, we classified these hospitals as urban hospitals.

It is clear that the changes being implemented in this document will affect both a substantial number of small rural hospitals as well as other classes of hospitals, and the effects on some may be significant. Therefore, the discussion below, in combination with the rest of this final rule with comment period, constitutes a combined regulatory impact analysis and regulatory flexibility analysis in accordance with E.O. 12291 and the RFA.

II. Changes in the Final Rule

There are no major policy changes in this final rule from the policies proposed in the proposed rule. However, since we published the proposed rule, the Omnibus Budget Reconciliation Act of 1993 (Pub. L. 103–66) (OBRA 93) was enacted. Several provisions of Public Law 103–66 have significant impacts on the results of our impact analysis, since they affect inpatient hospital payments for the operating and capital prospective payment systems during FY 1994, and, in some cases, FY 1993. These provisions are:

- The update factor for the standardized amounts for FY 1994 is the market basket rate of increase minus 2.5 percentage points for hospitals located in urban areas and the market basket rate of increase minus 1.0 percentage point for hospitals located in rural areas.
- Beginning in FY 1994, updates to the hospital-specific rates for sole community hospitals (SCHs) and Medicare-dependent, small rural hospitals (MDHs) will be made on a Federal fiscal year basis, rather than on a cost reporting period basis. The FY 1994 update will be computed taking into account the portion of the 12-month cost reporting period beginning during FY 1993 that occurs during FY 1994. In addition, the update for SCHs and MDHs is the market basket rate of increase minus 2.3 percentage points for FY 1994.
- The unadjusted standard Federal rate for capital payments to prospective payment hospitals is reduced by 7.4 percent for FY 1994. We note that this provision does not supersede the provision of section 1886(g) of the Act that requires that aggregate payments equal 10 percent less than the amount that would have been paid to hospitals under reasonable cost reimbursement.
- Hospitals in urban areas with wage indexes below the wage index for rural areas in the State and hospitals in a State comprised of a single urban area are not subject to further decreases in their wage indexes as a result of reclassification of other hospitals. Under the statute, this provision is effective retroactive to October 1, 1991.
- Hospitals classified as regional referral centers (RRCs) on September 30, 1992, will maintain that classification for cost reporting periods beginning in FYs 1993 and 1994, unless the area in which the hospital is located is redesignated as a Metropolitan Statistical Area (MSA) by the Office of Management and Budget (OMB) for such a fiscal year.
- The special payment provisions for Medicare-dependent, small rural hospitals (MDHs) are extended through discharges occurring before October 1,

1994. However, after a hospital's first three 12-month cost reporting periods as an MDH, there is a revision in the payment methodology.

• Hospitals that lost their classification as an RRC for cost reporting periods beginning during FY 1993 are entitled to receive a lump-sum payment equal to the difference between the hospital's actual aggregate payment during that period and the aggregate payment that the hospital would have received if the hospital had been classified as an RRC. Hospitals that lost their classification as MDHs for cost reporting periods beginning during FYs 1992 or 1993 are entitled to receive a similar lump-sum payment.

• Hospitals that fail to qualify as RRCs or MDHs as a result of a decision by the Medicare Geographic Classification Review Board (MGCRB) to reclassify the hospital as being located in an urban area for either FY 1993 or FY 1994 may decline such reclassification.

• The regional floor provision, which allows hospitals in census regions for which regional standardized amounts exceed the national standardized amount to be paid based on 15 percent of the regional amount and 85 percent of the national amount, has been extended through FY 1996.

• For FYs 1994 through 1997, the applicable rate-of-increase percentages (the market basket percentage increase) for hospitals that are excluded from the prospective payment system are reduced by the lesser of one percentage point or the percentage point difference between 10 percent and the percentage by which the hospital's allowable operating costs of inpatient hospital services for cost reporting periods beginning in FY 1990 exceeds the hospital's target amount. Hospitals or distinct part hospital units with FY 1990 operating costs exceeding target amounts by 10 percent or more receive the market basket percentage increase.

• Payments to hospitals for the cost of administering blood clotting factor to Medicare beneficiaries who have hemophilia are reinstated retroactively to discharges occurring on or after December 19, 1991, and extended through discharges occurring before October 1, 1994.

• Effective with discharges occurring on or after August 10, 1993, the time spent by graduate medical residents providing services at a community health center under the ownership and control of a hospital are included in the hospital's resident count for purposes of computing indirect medical education payments.

• For cost reporting periods beginning in FYs 1994 and 1995, direct graduate medical education payments are not updated, except for payments for residents in primary care, and obstetrics and gynecology.

• Effective August 10, 1993, a resident in an approved preventive care training program may be counted as a full-time resident for up to 2 additional years beyond the initial residency period.

While the changes due to Public Law 103–66 have significant effects on payments, they do not greatly affect the regulatory impacts of the policy changes we are implementing in this final rule with comment period in comparison with the regulatory impacts discussed in the proposed rule. Rather, differences in this final rule impact analysis compared to that in the proposed rule appear to be the result of using later or more complete hospital data. For example, a more complete FY 1992 MEDPAR file is now available compared to the one available at the time of the proposed rule. In addition, more recent hospital-specific data, including cost reports, are used in this analysis.

Since publication of the May 26, 1993 proposed rule, the latest hospital market basket forecast projects an increase of 4.3 percent in the operating costs of hospitals paid under the prospective payment system, compared to the 4.2 percent market basket increase published in the proposed rule. Prior to passage of Public Law 103–66, the urban standardized amounts for FY 1994 were to be updated at a rate equal to the market basket forecast, and the rural standardized amount was to be updated by the market basket plus 1.5 percent. As noted above, the Act now specifies that the FY 1994 update to the urban standardized amounts is the market basket minus 2.5 percent, and the update to the rural standardized amount is market basket minus 1.0 percent. This results in a 1.8 percent update in the urban standardized amounts rather than the 4.2 percent projected at the time of the proposed rule. The rural standardized amount will be updated by 3.3 percent rather than 5.7 percent. The hospital-specific rates for sole community hospitals and Medicare-dependent, small rural hospitals will be updated by 2.0 percent (market basket minus 2.3 percent) as specified in Public Law 103–66. This represents a decline from the full market basket update of 4.2 percent published in the proposed rule.

For hospitals and units excluded from the prospective payment system, Public Law 103–66 amended section 1886(b)(3)(B) of the Act to provide that for cost reporting periods beginning on or after October 1, 1993 and before October 1, 1994, the applicable rate-of-increase percentage is the market basket percentage increase minus the lesser of 1 percent, or the percentage difference between 10 percent and the hospital's "update adjustment percentage," except for hospitals with an update adjustment percentage of at least 10 percent. The rate-of-increase percentage for hospitals in the latter case is the market basket percentage increase. The update adjustment percentage is the percentage by which a hospital's allowable inpatient operating costs exceed the hospital's ceiling for the cost reporting period beginning in FY 1990. For cost reporting periods beginning on or after October 1, 1994 and before October 1, 1997, the update adjustment percentage is the update adjustment percentage from the previous year plus the sum of the previous years' applicable reductions. The applicable reduction and applicable percentage are then determined in the same manner as for FY 1994. The most recent forecasted market basket increase for FY 1994 for hospitals and units excluded from the prospective payment system is 4.3 percent.

With regard to the capital prospective payment system, we have revised our estimate of the rate of increase in capital costs per case and our budget neutrality target. The FY 1994 Federal rate and the hospital-specific rate will decrease 9.33 percent and 2.16 percent, respectively, from their FY 1993 levels. We now estimate that FY 1994 payments per case will increase 2.99 percent over FY 1993 levels. The impacts of these revised increases are illustrated in the analyses below.

III. Limitations of Our Analysis

In the analysis that follows, we examine the effects on hospital payments of changes required by statute and the changes implemented through this final rule. This is accomplished by estimating the effects of a given policy change holding other payment variables constant. We would expect hospitals to adapt to many of these changes, and to the extent they are able to do so, the actual impacts will vary from the estimates discussed below. However, we cannot accurately predict behavioral responses to our policy changes, and we do not make adjustments for future changes in such variables as admissions, lengths of stay, or case mix.

IV. Hospitals Included In and Excluded From the Prospective Payment System

The prospective payment systems for hospital inpatient operating and capital-

related costs encompass nearly all general, short-term, acute care hospitals that participate in the Medicare program. Only 55 short-term, acute care hospitals remain excluded from the prospective payment system under section 1814(b)(3) of the Act (in Maryland) or a demonstration project (in the Finger Lakes region of New York State). Thus, as of August 1993, approximately 5,300 hospitals were receiving prospectively based payments for furnishing inpatient services. This represents about 83 percent of all Medicare-participating hospitals. The majority of this impact analysis focuses on this set of hospitals.

The remaining 17 percent are specialty hospitals that are excluded by statute from the prospective payment system and continue to be paid on the basis of their reasonable costs, subject to a rate-of-increase ceiling on their inpatient operating costs per discharge. These hospitals include psychiatric, rehabilitation, long-term, children's, and cancer hospitals. The impact on these hospitals of the changes implemented in this final rule is discussed below.

V. Impact on Excluded Hospitals and Units

Approximately 1,000 specialty hospitals are excluded from the prospective payment system and are instead paid on a reasonable cost basis subject to the rate-of-increase ceiling under § 413.40. In addition, over 1,900 psychiatric and rehabilitation units in hospitals that are subject to the prospective payment system and 9 hospitals extensively involved in either the treatment of cancer or cancer research are also excluded from the prospective payment system and paid in accordance with § 413.40.

The applicable update for these hospitals and units was described above and in the preamble to this final rule. The impact depends on the cumulative cost increases experienced by each hospital and excluded unit, since its applicable base period. For excluded hospitals and units that have maintained their cost increases at a level below the percentage increases in the target amounts since their base period, the major effect will be on the level of incentive payments these hospitals and units receive. Conversely, for excluded hospitals and units with per-case cost increases above the cumulative update in their target amount, the major effect will be on the amount of excess costs that the hospitals will have to absorb.

In this context, we note that for cost reporting periods beginning on or after October 1, 1992, § 413.40(d)(3)(iii) allows an excluded hospital or unit whose costs exceed the rate-of-increase ceiling to receive the lower of its rate-of-increase ceiling plus 50 percent of reasonable costs in excess of the ceiling, or 110 percent of its ceiling. In addition, under the various provisions set forth in § 413.40, excluded hospitals and units can obtain substantial relief from the rate-of-increase ceiling for significant, yet justifiable, increases in operating costs that exceed the target amount. At the same time, however, by generally limiting payment increases to the growth rate in the hospital market basket, we continue to provide an incentive for excluded hospitals and units to restrain the growth in their spending for patient services.

VI. Quantitative Impact Analysis of the Proposed Policy Changes Under Prospective Payment System for Operating Costs

A. Basis and Methodology of Estimates

In this final rule with comment period, we are implementing policy changes and payment rate updates for the prospective payment systems for operating and capital-related costs. We have prepared separate analyses of the changes to each system, beginning with changes to the operating prospective payment system.

The data used in developing the quantitative analyses presented below are taken from FY 1992 inpatient billing data and the most current hospital-specific data that are used for payment purposes. Although the analyses of the changes to the operating prospective payment system do not incorporate any actual cost data, the most recently available hospital cost report data were utilized to create some of the variables by which hospitals are categorized.

Our analysis has several qualifications. First, as pointed out above, we do not make adjustments for behavioral changes that hospitals may adopt in response to these policy changes. Second, due to the interdependent nature of the prospective payment system, it is very difficult to precisely isolate and quantify the impact associated with a given change. Third, the results of our analysis are, of course, dependent on the quality of the data employed. We have attempted to construct each variable using the best available source, and we are confident that our simulations accurately project likely impacts on various hospital groups. For individual hospitals, however, data biases may occur.

The simulations estimate total payments under the operating prospective payment system given various combinations of payment parameters. Short-term acute care hospitals not paid under the prospective payment system (hospitals in the New York Finger Lakes demonstration project, and hospitals in Maryland) are excluded from the simulations. Payments under the capital prospective payment system, or payments for other than inpatient operating costs, are not estimated in this section. Estimated payment impacts of FY 1994 changes to the capital prospective payment system are discussed later in this impact analysis. For purposes of determining which method of payment to apply for SCHs or MDHs (the Federal payment rate or the applicable hospital-specific payment rate as prescribed by section 1886(d)(5)(D)(i) of the Act), we assume that all such hospitals have a cost reporting period that coincides with the Federal fiscal year.

B. Impact of Public Law 103–66

The enactment of Public Law 103–66 since the publication of the proposed rule has necessitated broadening the scope of our impact analysis to isolate the impacts of that statute from the impact of other changes in this final rule. Most notable is the reduction in the update factors. Both the urban and the rural update factors were reduced 2.5 percentage points. (Public Law 103–66 specifies that the rural update for FY 1994 is the market basket minus 1.0 percentage point; before this the rural update was market basket plus 1.5 percentage points.) Therefore, all hospitals have a smaller overall increase from FY 1993 to FY 1994 than they would have had absent Public Law 103–66.

Changes resulting from Public Law 103–66 have varying effects on different groups of hospitals. The most dramatic in terms of altering the percent change in payments from FY 1993 to FY 1994 is the extension of the special payment protection for Medicare-dependent, small rural hospitals (MDHs) through cost reporting periods ending before October 1, 1994. Because this extension was made retroactive, it results in higher FY 1993 payments to hospitals that had lost their MDH status during that year. Consequently, the higher FY 1993 baseline reduces the net change in payments from FY 1993 to FY 1994. Although the extension of this provision leads to higher payments for these hospitals in FY 1994, the payments are at a reduced rate relative to FY 1993 (for FY 1994, Public Law 103–66 provides that MDHs receive 50 percent of the difference between the hospital-specific rate and the Federal payment rate for MDHs paid on the basis of the hospital-

specific rate). In addition, for MDHs and for SCHs, the update in the hospital-specific payment rate is reduced to 2.0 percent. The net effect, despite the provision in Public Law 103–66 extending the MDH provision, is that payments in FY 1994 are now estimated to be even further below FY 1993 levels than the decrease estimated in the proposed rule.

While this effect is most evident in the MDH rows in the tables, it is also apparent among other hospital groups as well. For example, one may expect that rural hospitals as a group would not have their FY 1993 to FY 1994 payment changes reduced by the smaller update factors to the same degree as urban hospitals, due to the extension of the MDH protection. However, while FY 1994 payments to rural hospitals are not reduced as a result of Public Law 103–66 to the same extent as urban hospitals, the effects of the MDH provision and the reduction in the update factor discussed above also impact on total payments to rural hospitals. As a result, the FY 1993 to FY 1994 change in payments for rural hospitals is reduced from the proposed rule level by the same degree as the reduction for urban hospitals. This outcome is illustrated in Table I below.

Table I displays the overall impacts of Public Law 103–66. This represents a departure from previous impact analyses, including the proposed rule, where we have focused primarily on the major policy changes being implemented through the rulemaking process. We believe this is necessary to demonstrate that the significant variances between the impacts shown in the proposed rule and those reported here are, for the most part, due to the statutory changes in Public Law 103–66. Following the discussion of the impacts due to Public Law 103–66, we present the impacts due to the other changes we are implementing in this final rule with comment period.

Table I categorizes hospitals by various geographic and special payment groups to illustrate the varying impacts on different types of hospitals. The top row of the table shows the overall impact on the 5,302 hospitals included in the analysis. This is 84 fewer hospitals than were included in the impact analysis in the FY 1993 final rule (57 FR 39989). (Data for 119 hospitals that were included in last year's analysis were not available for analysis this year, primarily due to closures; however, data were available this year for 35 hospitals for which data were not available last year.) The next three rows of Table I contain hospitals categorized according to their geographic location (large urban, other urban or rural) based on the new MSA definitions. There are 1,636 hospitals located in large urban areas (populations over 1 million), 1,344 hospitals in other urban areas (populations of 1 million or fewer), and 2,322 hospitals in rural areas.

The next three rows categorize hospitals that changed their geographic location due to the new MSA definitions. The first row shows that 108 hospitals were located in counties with MSA designations that changed from rural to urban. It does not include 23 other hospitals that have been deemed urban under section 1886(d)(8)(B) of the Act and are located in counties that are now designated as MSAs under the revised MSA definitions. The next row contains hospitals located in counties that changed from urban to rural status under the new MSA definitions, and the third row contains hospitals located in counties that changed from other urban to large urban MSA designations. There were three hospitals in counties that changed from large urban to other urban. Due to the small cell size, this category is not shown. The next two groupings are by hospital bed size and urban or rural MSA designations. The final groupings under geographic location are by census divisions, determined on the basis of geographic location in either an urban or rural county under the new MSA definitions.

To illustrate the effects of hospital geographic reclassifications for FY 1994, the second part of Table I shows changes in payments based on a hospital's FY 1994 payment classification for purposes of the standardized amount under the prospective payment system after any reclassifications under sections 1886(d)(10) of the Act, rather than its actual geographic location. For example, as noted above, the number of hospitals included in our analysis that are actually located in large urban, other urban, and rural areas is 1,636, 1,344, and 2,322, respectively. After incorporating reclassifications, the number of large urban, other urban, and rural hospitals is 1,816, 1,421, and 2,065, respectively.

The next three groupings examine the impacts of the proposed changes on hospitals grouped by whether they have residency programs (teaching hospitals), whether they receive DSH payments, and whether they receive some combination of these two adjustments. We have changed our definition of major teaching hospitals in this analysis so that they are now defined according to whether the hospital has 100 or more residents. In the past, we have defined major teaching hospitals based on whether they had resident-to-bed ratios of .25 or more. We believe that our new definition results in a more homogeneous grouping of those hospitals that are defined as having major teaching programs. Furthermore, since the indirect medical education adjustment for the capital prospective payment system is based on the resident-to-average daily census ratio, it is inconsistent to define major teaching hospitals based on resident-to-bed ratios. As a result of this change, 45 hospitals defined as major teaching hospitals for FY 1993 are defined as minor teaching hospitals for FY 1994. Conversely, 37 hospitals that were defined as minor teaching become major teaching under the new definition.

Disproportionate share hospitals are grouped according to their payment status during FY 1994. That is, hospitals located in rural counties that have been reclassified as urban by the MGCRB for purposes of assigning the standardized amount are categorized here as urban, since they are considered urban in determining the amount of their DSH adjustment. The rural DSH hospitals, therefore, including those in the rural referral center and sole community hospital categories, represent hospitals that were not reclassified for the standardized amount. The next category groups hospitals paid on the basis of the urban standardized amount in terms of whether they receive the indirect medical education adjustment or the DSH adjustment, or both.

The next six rows categorize rural hospitals by special payment groups (sole community hospitals, rural referral centers, and MDHs). Rural hospitals reclassified for purposes of the standardized amount for FY 1994 are not included here. The MDH and rural referral center (RRC) rows include all hospitals that we have identified as MDHs or RRCs that were not reclassified for purposes of the standardized amount or both the wage index and the standardized amount. Because Public Law 103–66 permits MDHs and RRCs that failed to qualify as a result of a reclassification decision by the MGCRB for either FY 1993 or FY 1994 to decline their reclassification, it was necessary to project which hospitals would exercise this option. Those projected to do so are included here. As a result, the number of reclassified hospitals is lower than the number in the proposed rule, and the numbers of RRCs and MDHs are larger. In the proposed rule, 164 hospitals were identified as having received payments as MDHs during FY 1993. We now show 461 hospitals that will continue to benefit from this provision.

The rural referral centers (156), sole community hospitals (558), and rural referral center/sole community hospitals (47) shown here were not reclassified for purposes of the standardized amount. There are 41 rural referral centers and 14 sole community hospitals that would be reclassified for the standardized amount in FY 1994 and are therefore not included in these rows.

The next two groupings are based on type of ownership and the hospital's Medicare utilization expressed as a percent of total patient days. Data needed to calculate Medicare utilization percentages were unavailable for 66 hospitals.

The next series of groupings concern the geographic reclassification status of hospitals. The first three groups of rows display hospitals that were reclassified by the MGCRB for either FY 1993 or FY 1994, or for both years, by urban/rural location. A total of 672 hospitals that were reclassified for FY 1993 are not reclassified for FY 1994 (278 urban hospitals and 394 rural hospitals), and only 114 hospitals are reclassified for the first time for FY 1994. (Among other factors, the effects of the revised guidelines to qualify for wage index reclassifications for FY 1994 (see § 412.230(e)) are reflected here.) The next rows illustrate the overall number of reclassifications, as well as the numbers of reclassified hospitals grouped by urban and rural location.

TABLE I.—IMPACT ANALYSIS OF FINAL OPERATING COST PROSPECTIVE PAYMENT SYSTEM CHANGES FOR FY 1994

	Num. of hosps.[1]	FY 93 Effects of OBRA[2] (1)	FY 94 Baseline prior to OBRA[3] (2)	FY 94 Baseline after OBRA[4] (3)	Combined impact of final rule changes[5] (4)	All changes prior to reclassification[6] (5)	All changes[7] (6)
(By Geographic Location)							
All Hospitals	5,302	0.2	4.7	−1.8	0.2	3.0	3.1
Large urban areas (populations over 1 million)	1,636	0.0	4.9	−1.9	1.0	3.9	4.2
Other urban areas (populations of 1 million or fewer)	1,344	0.1	4.8	−2.0	−0.4	2.3	2.5
Rural areas	2,322	1.4	3.5	−1.0	−1.4	1.1	0.3
Hospitals changing MSA due to 1990 census:							
Rural to urban	108	2.5	2.6	−2.9	17.3	16.9	9.7
Urban to rural	13	0.0	4.5	−2.2	−0.7	1.5	2.1
Other urban to large urban	143	0.0	4.5	−1.7	3.5	6.4	5.3
Urban hospitals:	2,980	0.0	4.8	−2.0	0.5	3.3	3.6
0–99 beds	750	0.3	4.0	−2.1	1.5	3.3	3.2
100–199 beds	899	0.0	4.8	−2.0	0.7	3.4	3.5
200–299 beds	611	0.0	4.6	−2.0	0.3	2.9	3.2
300–499 beds	529	0.0	4.9	−1.9	0.2	3.1	3.5
500 or more beds	191	0.0	5.0	−1.9	0.7	3.8	4.1
Rural hospitals:	2,322	1.4	3.5	−1.0	−1.4	1.1	0.3
0–49 beds	1,180	2.3	2.9	−0.7	−1.6	0.4	−0.2
50–99 beds	708	1.8	3.2	−0.7	−1.6	0.8	0.4
100–149 beds	222	1.4	3.3	−0.9	−1.3	1.0	1.1
150–199 beds	106	0.6	4.3	−1.2	−1.2	1.8	−0.3
200 or more beds	106	0.7	4.0	−1.5	−1.0	1.4	0.5
Urban by region:							
New England	172	0.0	3.8	−1.5	1.5	3.8	3.2
Middle Atlantic	447	0.0	5.0	−2.2	2.3	5.0	5.7
South Atlantic	453	0.1	5.1	−2.2	0.9	3.7	3.7
East North Central	498	0.0	3.9	−1.2	−0.8	1.8	2.0
East South Central	170	0.0	5.3	−2.1	−0.4	2.6	3.2
West North Central	187	0.0	4.8	−2.1	−0.6	2.0	2.3
West South Central	380	0.1	5.3	−2.1	−0.6	2.5	2.9
Mountain	121	0.0	4.9	−2.1	−0.4	2.3	2.6
Pacific	502	0.0	5.3	−2.2	0.2	3.2	3.6
Puerto Rico	50	0.0	4.9	−2.2	3.4	6.0	6.3
Rural by region:							
New England	53	0.5	3.7	−0.9	0.3	3.1	3.7
Middle Atlantic	85	1.9	2.5	−0.7	1.4	3.2	2.4
South Atlantic	302	0.7	4.4	−1.7	−1.9	0.8	0.1
East North Central	313	2.1	2.2	−0.1	−1.9	0.2	−0.6
East South Central	289	0.5	5.2	−1.6	−2.0	1.4	0.1
West North Central	542	2.6	2.4	−0.3	−1.1	0.9	1.0
West South Central	361	2.3	2.7	−0.5	−1.7	0.4	−0.5
Mountain	227	0.5	4.4	−1.7	−1.4	1.2	−0.3
Pacific	145	0.5	4.4	−1.8	−1.7	0.8	0.1
Puerto Rico	5	0.0	5.5	−2.3	12.3	15.8	22.4
(By Payment Classification)							
All hospitals	5,302	0.2	4.7	−1.8	0.2	3.0	3.1
Large urban areas (populations over 1 million)	1,816	0.0	4.8	−1.9	0.9	3.8	4.2

TABLE I.—IMPACT ANALYSIS OF FINAL OPERATING COST PROSPECTIVE PAYMENT SYSTEM CHANGES FOR FY 1994—Continued

	Num. of hosps.[1]	FY 93 Effects of OBRA[2] (1)	FY 94 Baseline prior to OBRA[3] (2)	FY 94 Baseline after OBRA[4] (3)	Combined impact of final rule changes[5] (4)	All changes prior to reclassification[6] (5)	All changes[7] (6)
Other urban areas (populations of 1 million or fewer)	1,421	0.1	4.8	−2.0	−0.5	2.2	2.4
Rural areas	2,065	1.4	3.5	−1.0	−1.4	1.1	−0.2
Teaching status:							
Non-teaching	4,261	0.4	4.4	−1.8	0.1	2.7	2.7
Fewer than 100 residents	821	0.0	4.7	−1.9	−0.1	2.7	2.9
100 or more residents	220	0.0	5.2	−1.9	1.0	4.2	4.7
Disproportionate share hospitals (DSH):							
Non-DSH	3,481	0.3	4.1	−1.7	0.0	2.3	2.4
Urban DSH:							
100 beds or more	1,302	0.0	5.2	−2.0	0.6	3.7	4.1
Fewer than 100 beds	140	0.1	5.0	−2.2	2.2	4.9	4.3
Referral centers (RRC)	48	0.3	4.8	−1.6	−1.4	1.7	−1.1
Other rural DSH hosp.:							
100 beds or more	60	0.0	6.2	−2.2	−2.3	1.4	0.8
Fewer than 100 beds	159	0.9	5.0	−1.8	−2.3	0.8	0.2
Urban teaching and DSH:							
Both teaching and DSH	605	0.0	5.3	−2.0	0.6	3.8	4.2
Teaching and no DSH	386	0.0	4.3	−1.8	0.0	2.4	2.8
No teaching and DSH	837	0.1	5.0	−2.0	0.7	3.6	3.8
No teaching and no DSH	1,409	0.1	4.3	−1.9	0.4	2.7	3.1
Rural hospital types:							
Nonspecial status hospitals	843	0.0	5.7	−2.1	−2.2	1.2	−0.1
RRC	156	0.4	4.1	−1.5	−1.4	1.1	−1.0
SCH	558	0.0	4.6	−1.7	−0.2	2.6	2.0
MDH	461	12.1	−6.4	4.7	−1.4	−3.3	−2.7
SCH and RRC	47	0.3	3.9	−0.9	−0.5	2.4	0.6
SCH and MDH	1,066	3.2	1.4	0.1	−0.6	0.9	0.4
Type of ownership:							
Voluntary	3,059	0.1	4.6	−1.8	0.2	2.9	3.1
Proprietary	776	0.1	5.0	−2.0	0.4	3.3	3.6
Government	1,467	0.7	4.8	−1.7	0.2	3.2	3.1
Medicare utilization as a percent of inpatient days:							
0–25	309	0.0	5.8	−2.1	0.2	3.8	4.5
25–50	1,614	0.0	5.1	−1.9	0.4	3.4	3.7
50–65	2,301	0.2	4.5	−1.8	0.1	2.7	2.7
Over 65	1,012	1.2	3.3	−1.4	0.0	1.8	1.8
Hospitals Reclassified by the Medicare Geographic Review Board							
Reclassification status during FY93 and FY94							
Reclassified during both FY93 and FY94	551	0.5	4.4	−1.5	0.6	3.4	4.1
Urban	188	0.2	4.8	−1.9	1.8	4.6	5.3
Rural	363	1.2	3.9	−0.9	−1.4	1.4	2.2
Reclassified during FY94 only	114	0.2	4.5	−1.7	0.3	3.0	7.5
Urban	41	0.0	4.7	−1.9	0.7	3.4	7.1
Rural	73	1.0	3.8	−1.0	−1.2	1.6	8.8
Reclassified during FY93 only	672	0.4	4.0	−1.6	1.8	4.2	0.2
Urban	278	0.2	4.2	−1.9	3.4	5.7	1.9
Rural	394	0.9	3.7	−1.2	−1.0	1.4	−3.1
FY 94 Reclassifications:							
All reclassified hosp.	669	0.5	4.4	−1.6	0.5	3.4	4.5
All nonreclassified hospitals	4,606	0.2	4.7	−1.9	0.2	2.9	3.0
All urban reclassified hospitals	230	0.1	4.8	−1.9	1.6	4.4	5.6
Urban nonreclassified hospitals	2,750	0.0	4.8	−2.0	0.4	3.2	3.4
All reclassified rural hospitals	439	1.2	3.9	−0.9	−1.4	1.5	2.8
Rural nonreclassified hospitals	1,856	1.6	3.3	−1.0	−1.4	0.9	−0.9
Other reclassified:							
Hospitals (section 1886(D)(8)(B))	27	0.0	4.0	−1.8	−1.3	0.7	1.5

[1] Because data necessary to classify some hospitals by category were missing, the total number of hospitals in each category may not equal the national total. Hospital-specific data and discharges data are from FY 1992, and hospital cost report data are from reporting periods beginning in FY 1991.

[2] This column illustrates the changes in FY 1993 payments due to the Omnibus Budget Reconciliation Act of 1993 (Public Law 103–66 (OBRA)). In particular, it illustrates the higher payments received by Medicare-dependent, small rural hospitals (MDHs).

TABLE I.—IMPACT ANALYSIS OF FINAL OPERATING COST PROSPECTIVE PAYMENT SYSTEM CHANGES FOR FY 1994—Continued

[3] This column displays the payment impacts of the pre-OBRA statutory changes for FY 1994 (4.2 percent update to the urban amount and 5.7 percent update for the rural amount, higher disproportionate share payments), after incorporating the FY 1993 payment effects shown in the previous column. It reflects the fact that, prior to OBRA, the special payment protection for MDHs would be eliminated for FY 1994, as would the regional floor provision.

[4] This column shows the payment effects of OBRA during FY 1994, relative to FY 1994 payments prior to OBRA.

[5] This column displays the combined effects of the changes to the prospective payment system described in this final rule. The individual impacts of these changes are shown in a separate table.

[6] Shown here are the combined effects of all of the FY 1994 policy changes prior to geographic reclassification by the Medicare Geographic Classification Review Board (MGCRB), compared to FY 1993 payments prior to geographic reclassification. Although it incorporates all of the changes displayed in columns 2 through 4, the sum of those columns may be slightly different from the percentage changes shown here, due to rounding errors and interactive effects.

[7] This column shows the combined effects as described for the previous column, but compares FY 1994 total payments after MGCRB reclassifications to total FY 1993 payments after reclassification.

Column 1, labeled "FY 1993 Effects of OBRA 93" demonstrates the changes in FY 1993 payments after Public Law 103–66 compared to the level prior to its enactment. As discussed above, the increases in payments to rural areas stem from the retroactive extension of the MDH provision during FY 1993. In order to facilitate this discussion of the impacts of Public Law 103–66 in the comparison of FY 1993 and FY 1994 payments, the payment simulations in the first five columns of Table 1 reflect impacts prior to geographic reclassification. Because we believe it is important to show the effects of geographic reclassification separately, the FY 1994 baseline simulation models payments to hospitals based on their geographic location. Therefore, including geographic reclassification in the FY 1993 simulations shown here would bias the comparison to the FY 1994 baseline, since all hospitals reclassified during FY 1993 would lose their reclassification in the FY 1994 baseline. Of course, since actual FY 1993 and FY 1994 payments reflect reclassifications, we do directly compare total payments after geographic reclassification in the last column of the table.

In the row displaying the impact on rural hospitals, the effect of Public Law 103–66 in FY 1993 is a 1.4 percent increase in payments. The MDH row shows that the strongest factor in this increase is a 12.1 percent rise in payments among this group due to the retroactive extension of the MDH provision. This increase in FY 1993 payments is important to this analysis because, as pointed out earlier, it results in a larger FY 1993 baseline for rural hospitals, and, thus, a smaller net change in FY 1994 than they would otherwise experience. This effect is illustrated in subsequent columns, and is discussed further below. Also, payments to RRCs increase by 0.4 percent due to the reinstatement of RRCs that have regained RRC status as a result of the provisions of Public Law 103–66. Finally, we note that there are some increases among urban hospital groups (for example, a 0.3 percent increase among urban hospitals with fewer than 100 beds), contrary to what one might anticipate. The explanation lies in the row of hospitals changing from rural to urban due to the 1990 census. The net increase in payments for these hospitals in FY 1993 is 2.5 percent. However, since these hospitals are considered urban in FY 1994, they are no longer eligible to qualify as MDHs. The impact of this effect is shown in Column 2.

Column 2 displays the change in payments from a simulation incorporating the higher FY 1993 payments due to Public Law 103–66, relative to a simulation of FY 1994 payments as they would have been prior to enactment of Public Law 103–66. This comparison is useful to help understand the significant variation shown here in the changes in payments to hospitals from those shown in the proposed rule. The impact on all hospitals of these changes would have been a 4.7 percent increase in payments from FY 1993. The majority of that increase would have been attributable to the pre-Public Law 103–66 update factors (4.2 percent for the urban amounts and 5.7 percent for the rural amount). Because urban hospitals receive such a large proportion (over 86 percent) of total payments in comparison to rural hospitals, the average update per case is much closer to the urban update. Of course, these update amounts were superseded by those included in Public Law 103–66. Two other significant factors reflected here, but no longer in effect, are the elimination of the regional floors and of the special payment protection for MDHs. Eliminating the regional floor would have resulted in approximately a 0.2 percent decrease in total payments. Ending the MDH provision in FY 1994 would have resulted in a net decrease in payments to these hospitals of 6.4 percent, relative to their FY 1993 payments after reinstatement of the MDH provision.

Another significant change included here remains in effect after enactment of Public Law 103–66 as well. This is an increase in the disproportionate share (DSH) payment adjustment for urban hospitals with 100 or more beds and for rural hospitals with 500 or more beds, effective for discharges occurring on or after October 1, 1993, in accordance with section 1886(d)(5)(F)(vii) of the Act. This results in a net increase in total payments of 0.4 percent.

Another significant change between the FY 1993 and FY 1994 payments compared in this column is the lower than expected level of outlier payments estimated to be made during FY 1993. As discussed in the addendum to this final rule, we now estimate that outlier payments during FY 1993 will be 4.5 percent of total DRG payments. When the FY 1993 final rule was published on September 1, 1992 (57 FR 39833), we estimated FY 1993 outlier payments would be 5.1 percent of total DRG payments, and the FY 1993 standardized amounts were set accordingly. Similarly, we estimate that outlier payments during FY 1994 will be 5.1 percent of total DRG payments. The

0.6 percent higher level of FY 1994 outlier payments overall is also reflected in this column.

Hospitals in urban areas experience the greatest increase in payments (4.9 percent for large urban hospitals and 4.8 percent for other urban hospitals). They benefit the most from both the new DSH formula and the higher outlier payments. This is particularly true for hospitals in large urban areas, whose payments rise approximately 0.5 percent due to the new DSH formula, and 0.6 percent due to the higher outlier payments.

Hospitals in rural areas experience a payment increase of 3.5 percent. The scheduled elimination of the MDH provision before the enactment of Public Law 103–66, as reflected in the FY 1994 payments in this column, is a significant cause of the lower percentage change for all rural hospitals. Also, these hospitals experience a lower increase in outlier payments than urban hospitals do. Their outlier payments increase by only 0.5 percent from FY 1993. Finally, although the update to the rural standardized amount is 5.7 percent, this row includes rural referral centers paid on the basis of the other urban amount (updated by 4.2 percent), and sole community hospitals paid on the basis of their hospital-specific rates (also updated by 4.2 percent).

In examining this column, it is important to note that the effects of hospitals redesignated as a result of the 1990 census changes are not shown here. These changes are a major component of the changes being implemented by this final rule, and thus, are not reflected until Column 4 of the table. Therefore, in Column 2 and Column 3, we treat the hospitals in these rows as if they were paid according to their designation prior to the census changes. As a result, the percentage changes in Column 2 for these rows reflect the changes discussed above, before considering the effects the new census designations. The relatively small increase for rural hospitals in counties that become urban reflects the fact that 16 of these hospitals had their MDH status reinstated for FY 1993.

Column 3 displays the impacts of Public Law 103–66 on the FY 1994 baseline. This column shows the percent changes in FY 1994 payments under Public Law 103–66 compared to FY 1994 payments before the statutory changes, as described in Column 2. The most significant differences here from the previous FY 1994 baseline are: The lower updates to the standardized amounts and the hospital-specific payment rates, the extension of the MDH payment protection (albeit at a lower level than for FY 1993), and the extension of the regional floor. The overall change from payments under the pre-Public Law 103–66 FY 1994 baseline is a 1.8 percent reduction for all hospitals. Payments to urban hospitals are 2.0 percent lower, and payments to rural hospitals are 1.0 percent lower.

The impact upon rural hospitals here is again due to the MDHs, as well as RRCs. Since this column shows the impact of moving from an FY 1994 baseline without special treatment of MDHs to one where they receive 50 percent of the difference between their hospital-specific payment rate and their applicable Federal rate, their net change is a 4.7 percent increase in their FY 1994 baseline after Public Law 103–66. In addition, by reinstating RRCs that no longer meet the eligibility criteria at § 412.96, Public Law 103–66 resulted in payment increases to hospitals previously paid as RRCs but paid as non-RRC rural hospitals in the pre-Public Law 103–66 baseline.

Among the census divisions, the impact of reinstating the regional floor is apparent among the regions that would have lost this special protection in FY 1994 prior to the passage of Public Law 103–66. Among the urban census divisions, hospitals in the New England, East North Central, and West North Central regions all are helped by the regional floor. Although payments in these regions are still less than they would be prior to Public Law 103–66, they do not decline as much as payments to urban hospitals generally. The most significant impacts occur in the New England and the East North Central regions, where payments are 1.5 percent and 1.2 percent lower, respectively, compared to the average urban decrease of 2.0 percent. Among rural census divisions, New England, the Middle Atlantic, the South Atlantic, and the East North Central all benefit from the regional floor. The most significant impacts of the regional floor, when compared to the average rural payment decrease of 1.1 percent, are in New England (0.9 percent lower payments), the Middle Atlantic (0.7 percent lower payments) and East North Central regions (0.1 percent lower payments).

In summary, the effects of the changes enacted by Public Law 103–66 are to retroactively increase FY 1993 total payments by 0.2 percent, and decrease FY 1994 total payments by 1.8 percent. The net change in payments from FY 1993 to FY 1994 is subsequently 2.0 percent less than it would have been in the absence of Public Law 103–66. For urban hospitals, FY 1993 payments are unchanged and FY 1994 payments decrease 2.0 percent, thus resulting in a 2.0 percent smaller change from FY 1993 payments. For rural hospitals, FY 1993 payments increase by 1.4 percent, and FY 1994 payments are 1.0 percent less, resulting in a net effect of reducing the change from FY 1993 by 2.4 percent from what it would otherwise be.

Column 4 in Table I is the sum of the changes in FY 1994 payments that result from the changes implemented in this final rule. These changes and their impacts are discussed separately below. Specifically, this column displays the impacts of adding the following changes to the post-Public Law 103–66 FY 1994 baseline model described in the previous column:

- The effects of the annual reclassification of DRGs and the recalibration of the DRG weights required by section 1886(d)(4)(C) of the Act.
- The effects of changes in the standardized payment amounts hospitals receive due to changes in MSA definitions.
- The effects of the new MSA definitions on the wage index.
- The effects of changes in wage index values reflecting the FY 1990 wage survey data.

This column serves to demonstrate that the impacts of the changes we are implementing through this final rule are not significantly different from the impacts we described in the proposed rule (see 58 FR 30419). For example, the combined impact for all hospitals is a 0.2 percent increase, due to hospitals in counties previously designated as rural that become urban as a result of the 1990 census. Similarly, in the proposed rule, the combined effects of these changes for large urban, other urban, and rural hospitals, were: an increase of 1.1 percent for large urban hospitals, a decrease of 0.5 percent for other urban hospitals, and a decrease of 1.7 percent for rural hospitals. The corresponding numbers in this rule are: a 1.0 percent increase, a 0.4 percent decrease, and a 1.4 percent decrease, all very similar to the combined changes from the proposed rule. Some variations in the impacts between the final and the proposed rules do occur for particular hospital groups, and these are discussed later in this analysis within the context of the individual changes.

Column 5 shows the combined effects of the changes displayed in Columns 2 through 4, relative to FY 1993 payments, without consideration of the effects of geographic reclassifications by the MGCRB that are effective in either FY 1993 or FY 1994. The percent changes represent the effect of moving

from the post-Public Law 103-66 FY 1993 baseline to the FY 1994 simulation described in Column 4, which incorporates the statutory changes and the changes described in this final rule. Within reasonable bounds for rounding differences and interactive effects, the percent changes in this column are equal to the sum of the changes in the previous three columns.

The changes shown here represent, prior to the effects of the reclassification decisions by the MGCRB, the changes in hospital payments for FY 1994. The changes due to reclassification are thoroughly discussed below. The major point here, however, is that the reduced increase for rural hospitals compared to the proposed rule (that is, 1.1 percent versus 3.3 percent, before reclassifications), is entirely due to the recent changes made by Public Law 103-66. As a result of this statute, FY 1993 payments increased by 1.4 percent, and FY 1994 payments declined by 1.0 percent, which together reduce the change in rural hospitals' payments by 2.4 percent, roughly the difference between the change in this column and the effect of all changes prior to reclassification in the proposed rule. This result is somewhat misleading in that rural hospitals actually experience a smaller reduction in payments as a result of the statutory changes, relative to urban hospitals, when the statute's effect on total payments for both FY 1993 and FY 1994 is considered.

Column 5 also incorporates the impact of the 0.6 percent lower than estimated outlier payments during FY 1993. The biggest gains in this column are among hospitals in counties previously designated as rural that, as a result of the 1990 census, are now designated as urban. Their payments relative to last year (prior to reclassification) would increase 16.9 percent. Also, payments to hospitals in MSAs that were other urban during FY 1993 and are now large urban would increase, prior to geographic reclassification, by 6.4 percent. These increases are much less than those estimated in the proposed rule, however, and reflect revisions to the wage indexes and changes in the redesignations of MSAs that have occurred in the interim. These changes are discussed in more detail later in this analysis, when we examine the impacts of the changes implemented by this final rule. Finally, payments to hospitals that were urban in FY 1993 and are now rural increase overall, prior to geographic reclassification, by 1.5 percent.

Hospitals paid as MDHs experience a decline in total payments prior to geographic reclassification from FY 1993 to FY 1994 of 3.3 percent. However, similar to the effect discussed above for all rural hospitals, MDHs are better off overall as a result of Public Law 103–66. This is because the dramatic rise in their FY 1993 payments more than offsets the benefits they receive during FY 1994. Although the combined effect of the final rule changes for MDHs is not far off the combined effect in the proposed rule, direct comparisons are problematic. This is because the proposed rule identified only 164 hospitals receiving payments as MDHs during FY 1993. Due to the reinstatement of this provision by Public Law 103–66, we now have identified 461 hospitals that will receive payment as MDHs.

Another special rural hospital group with below average payment increases for FY 1994 is rural referral centers (a 1.1 percent increase). As noted previously, these hospitals also benefitted from Public Law 103–66, in that RRCs that no longer meet the eligibility criteria are able to continue to be paid as RRCs in FYs 1993 and 1994. The effects of this are shown in Column 3, where RRCs experience only 1.5 percent lower payments after Public Law 103–66. However, RRCs do experience a 1.4 percent decrease in payments due to the final rule changes. This outcome is discussed more fully in the discussion of Table 3.

A rural hospital group faring notably better than the rural average is sole community hospitals, with an increase from FY 1993 to FY 1994 of 2.6 percent, before geographic reclassifications are taken into account. As noted earlier, these hospitals continue to receive the benefit of a special payment protection allowing them to be paid the greater of their applicable prospective payment amount, or the higher of their updated FY 1982 or FY 1987 hospital-specific rates.

By March 30 of each year, the MGCRB issues reclassification decisions that will be effective for the next fiscal year beginning on October 1. The MGCRB may reclassify a hospital to an adjacent urban area or to a rural area with which it has a close proximity for the purposes of using the other area's standardized amount, wage index value, or both. (A rural referral center or a sole community hospital may be redesignated to an area that is not an adjacent county.)

Column 6 reflects changes in payments after accounting for both FY 1993 and FY 1994 reclassifications by the MGCRB. The FY 1994 standardized payment amounts and wage index values incorporate the MGCRB's reclassification decisions that will be effective for FY 1994, including all decisions made by the HCFA Administrator through the appeals and review process for MGCRB decisions and any reclassification withdrawal requests that were received by the MGCRB. These Administrator's decisions and withdrawals may affect the wage index value for specific geographic areas relative to those used in the impact analysis in the May 26, 1993 proposed rule. They may also determine whether a redesignated hospital receives the wage index of the area to which it is redesignated or a combined wage index that includes the data for both the hospitals already in the area and the redesignated hospitals.

The difference in the overall changes shown in Columns 5 and 6 (a 3.0 percent increase and 3.1 percent increase, respectively) is due to the different FY 1993 baselines that are used for comparison. The FY 1993 baseline in Column 5 is an estimate of FY 1993 payments before geographic reclassifications are taken into account. The FY 1993 baseline in Column 6 is an estimate of FY 1993 payments after geographic reclassifications are taken into account. Both baselines incorporate the effects of Public Law 103–66. When the FY 1993 standardized amounts were determined, the budget neutrality adjustment factor for geographic reclassification ensured that total FY 1993 payments before and after reclassification were equal. However, since our current estimates of FY 1993 payments are based on more recent data than when the standardized amounts were established, the pre- and post-reclassification total payment amounts in the two FY 1993 baselines are not equal for purposes of this impact analysis. As a result, the post-reclassification comparison results in a 0.1 percent higher increase in payments between FY 1993 and FY 1994 than the pre-reclassification comparison. The geographic reclassification budget neutrality factor appled to the FY 1994 standardized amounts ensures that total payments after reclassification equal total payments prior to reclassification.

Comparing the percentage changes prior to reclassification in Column 5 with the percentage changes after reclassification in Column 6 shows higher payments to hospitals in large urban areas after reclassification, slightly higher payments to hospitals in other urban areas after reclassification, and lower payments to hospitals in rural areas. A significant factor leading to the higher payments in large urban areas is the smaller reduction in the FY 1994 standardized amounts for geographic reclassification budget neutrality. The

final FY 1993 budget neutrality factor applied to the urban standardized amounts was 0.987471. The final FY 1994 urban budget neutrality factor is .992529. For hospitals in other urban areas, the impact of this smaller factor is offset by fewer geographic reclassifications during FY 1994.

Other urban areas and rural areas have a large number of hospitals that were reclassified by the MGCRB during FY 1993 but are not reclassified during FY 1994. Two factors primarily account for the decline in reclassifications. The first factor is the requirement, first applicable for FY 1994 reclassifications, that hospitals' average hourly wage must be at least 108 percent of the average hourly wage of the area in which they are located in order to be eligible for reclassification for purposes of the wage index. The second factor is the effect of the new MSA designations. Some previously reclassified hospitals are now considered part of the MSA to which they had been reclassified. The following chart illustrates the status of FY 1993 reclassified hospitals for FY 1994. Because the chart shows the status of FY 1993 reclassified hospitals for FY 1994, the number of hospitals in each category do not match those in Table I. Some hospitals that were used to develop the FY 1993 impact had no FY 1994 data available. Similarly, some hospitals used to develop the FY 1994 impact tables did not have any data available for FY 1993, and could not be included in this chart.

IMPACT OF MSA CHANGES AND RECLASSIFICATION CHANGES

	Effect of new MSA definitions			
	Remain rural	Moved from rural to urban	Moved from urban to rural	Remain urban
Total	2,329	108	13	2,871
FY 1993 Wage Only	606	46	1	227
FY 94 wage only	173	4	0	17
FY 94 standardized amount	54	1	0	7
FY 94 both	22	1	0	40
FY 94 not reclassified	357	40	1	163
FY 1993 Standardized Amount Only	58	9	0	17
FY 94 wage only	1	0	0	0
FY 94 standardized amount	43	1	0	11
FY 94 both	1	0	0	0
FY 94 not reclassified	13	8	0	6
FY 1993 Both	72	18	1	124
FY 94 wage only	9	1	0	1
FY 94 standardized amount	38	3	1	40
FY 94 both	20	0	0	61
FY 94 not reclassified	5	14	0	22
FY 1993 Not Reclassified	1,593	35	11	2,503
FY 1994 wage only	24	0	0	4
FY 94 standardized amount	46	0	0	11
FY 94 both	4	0	0	24
FY 94 not reclassified	1,519	35	11	2,464
FY 1993 Other Reclassified	50			
FY 94 other reclassified	27			
FY 94 urban non-reclassified	23			

The rows in the chart group hospitals by reclassification status in FY 1993, and within each group, the status of the hospitals during FY 1994. For purposes of this chart, hospitals that have been designated under the revised MSA definitions to the same MSA to which they were reclassified by the MGCRB are considered nonreclassified in FY 1994. This includes approximately 77 hospitals. The columns display the effects of the new MSA definitions. For example, during FY 1993, there were 606 rural hospitals reclassified for purposes of the wage index that remained rural after the new MSA definitions. Of these 606 hospitals, however, 357 are not reclassified for FY 1994, and 54 are now reclassified for the standardized amount instead of the wage index. Similarly, more than half of the 72 rural hospitals remaining rural that were reclassified for both the wage index and standardized amount in FY 1993 will be reclassified only for the standardized amount in FY 1994. Of the 227 hospitals that remain urban that were reclassified for their wage index for FY 1993, 163 will not be reclassified for FY 1994, and 7 will be reclassified for purposes of the standardized amount instead. Thus, the new 108 percent threshold for wage index reclassification appears to have greatly reduced the number of reclassifications for wage index purposes for FY 1994.

The second column indicates that, of 108 hospitals that moved from rural to urban status as a result of the new MSA definitions, 73 had been reclassified during FY 1993 (FY 1993 data were missing for 3 hospitals among this group). As a result, when the effects of geographic reclassifications are taken into account, the payment increase for this group of hospitals declines from 16.9 percent to 9.7 percent. Many of these hospitals were already receiving the benefit of higher urban payments in FY 1993 due to reclassification.

In contrast, the third column in the chart shows the FY 1993 and FY 1994 reclassification status of the 13 hospitals located in counties previously defined as urban that are now rural. One of these hospitals was reclassified for purposes of the wage index in FY 1993 but is not reclassified in FY 1994. Also, one hospital that was reclassified for both the wage index and the standardized amount in FY 1993 is only reclassified for the standardized amount in FY 1994 Despite losing their reclassification status and moving from urban to rural status, however, the total payments for this group during FY 1994 are 2.1

percent higher than their FY 1993 payments. This effect, however, is entirely due to one hospital in this group becoming a sole community hospital due to its new rural status. The 35.6 percent increase experienced by this hospital offsets the losses of all the others.

The rows showing hospitals grouped according to whether they receive the large urban, other urban, or the rural standardized amounts after reclassification further illustrate the impact on rural hospitals of fewer reclassifications. The net payment change for the 2,065 hospitals is a 0.2 percent decrease. Prior to reclassification, FY 1994 payments to this group increased by 1.1 percent. This post-reclassification decline is primarily attributable to 387 of these hospitals that were reclassified for FY 1993 but not for FY 1994.

Among rural hospitals by special payment category, rural referral centers that are not reclassified have notably lower payments, after accounting for the effects of the reclassification of other rural hospitals. Their net change in payments from FY 1993 is negative 1.0 percent. Of this group, 120 were reclassified for the wage index for FY 1993, but only 55 retained their reclassification status for FY 1994. Rural hospitals without any special payment provisions have a net decrease of 0.1 percent after considering reclassification, down from 1.2 percent in Column 5. Of the 843 hospitals in this group, 133 were reclassified for FY 1993 but are not reclassified for FY 1994.

For the most part, urban hospitals have higher payment increases after the effects of geographic reclassification are taken into account than they did in the previous column. Again, this is generally due to the smaller budget neutrality reduction resulting from fewer overall reclassifications and relatively fewer urban hospitals losing geographic reclassification status during FY 1994 (compared to the number of rural hospitals losing their reclassification status). Rural hospital groups, on the other hand, generally do not do as well when the reclassification effects are considered. An exception is the five rural hospitals in Puerto Rico, where one reclassified hospital has a large payment increase (22.4 percent).

Among rural hospitals grouped by census divisions, several categories stand out as experiencing significantly lower payments after accounting for reclassification. The largest decline is in the Mountain region, where the total change in payments for FY 1994 falls to negative 0.3 percent after reclassification (from an increase of 1.2 percent prior to reclassification). The second largest decline is in the East South Central region (from 1.4 percent before reclassification to 0.1 percent after reclassification). Other significant declines are evident in the Middle Atlantic (from 3.2 percent to 2.4 percent); the Pacific (from 0.8 percent to 0.1 percent); and the East North Central (from 0.2 percent to negative 0.6 percent).

Among hospitals grouped by reclassification status during FY 1993 and FY 1994, the changes are predictable. Hospitals reclassified for FY 1993 but not for FY 1994 experience lower payments when reclassification is taken into account compared to the previous column. The reverse holds true for hospitals reclassified for FY 1994 but not reclassified for FY 1993.

We also examined the impact of reclassification on payments to reclassified and nonreclassified hospitals in FY 1994. This analysis is presented in Table II, below. This analysis compares FY 1994 payments for reclassified hospitals with payment levels that assume reclassified hospitals are paid on the basis of their actual geographic location rather than reclassified location.

TABLE II.—EFFECTS ON PAYMENTS PER CASE OF GEOGRAPHIC RECLASSIFICATION OF HOSPITALS UNDER CURRENT RECLASSIFICATION POLICIES

	Number of hospitals	(a) Payment per case without reclassification [1]	(b) Payment per case after reclassification	(c) Percent change in payment per case due to reclassication only [2]
FY 94 reclassifications				
All reclassified hospitals	669	5,423	5,697	5.0
Standardized amount only	259	5,249	5,369	2.3
Wage index only	236	4,979	5,414	8.7
Both	174	6,044	6,323	4.6
All urban reclassified hospitals	230	6,580	6,762	2.8
Standardized amount only	75	6,340	6,375	0.6
Wage index only	28	7,648	8,240	7.7
Both [3]	127	6,492	6,679	2.9
All reclassified rural hospitals	439	4,090	4,470	9.3
Standardized amount only	184	3,807	4,038	6.0
Wage index only	208	4,284	4,678	9.2
Both [4]	47	3,964	4,666	17.7
All nonreclassified hospitals	4,606	6,157	6,116	−0.7
Urban non-reclassified hospitals	2,750	6,582	6,534	−0.7
Rural non-reclassified hospitals	1,856	3,804	3,803	0.0

[1] This column shows payments without regard to any previous MGCRB reclassification decision. This column reflects the fact that reclassifications are in effect for only 1 fiscal year.

[2] This column only shows the percentage change in payments resulting from decisions of the MGCRB for FY 1994. It does not reflect other changes such as outliers, DRG recalibration or the update.

[3] The number of hospitals includes 111 facilities that were reclassified as part of 15 urban group applications.

[4] The number of hospitals includes 1 facility that was reclassified as part of 1 rural group application.

Table II shows the changes in payments per case for all FY 1994 reclassified and nonreclassified hospitals in urban and rural locations for each of the three reclassification categories (standardized amount only, wage index only, or both). As evidenced by the increase in payment for all reclassified hospitals (5.0 percent) and the decrease in payments for nonreclassified hospitals (0.7 percent), the effects of the MGCRB reclassification decisions are significant. Hospitals located in rural areas that were reclassified for purposes of both their wage index value and their standardized amount will receive the largest percentage increase in payments per case. They can expect an average increase of 17.7 percent above what they would receive without reclassification. The 75 hospitals located in urban areas that were reclassified for purposes of their standardized amounts will receive an increase in payments per case of 0.6 percent compared to what they would receive if there were no reclassifications. Although 65 of these hospitals are in other urban areas and were reclassified to large urban areas, the remaining hospitals were reclassified either from large urban to large urban (6 hospitals) or from other urban to other urban (4 hospitals), thus diluting the overall payment impact.

The reclassification of hospitals primarily affects payment to nonreclassified hospitals through changes in the wage index and through the geographic reclassification budget neutrality adjustment required by section 1886(d)(8)(D) of the Act. Among hospitals that were not reclassified, the overall impact of hospital reclassifications would be an average decrease in payments per case of about −0.7 percent. Nonreclassified rural hospitals experience no payment change.

C. Impact of Changes Implemented by This Final Rule With Comment Period

Table III displays the impacts of the changes implemented in this final rule. To illustrate the impacts of the FY 1994 DRG reclassifications and recalibration of the DRG weights, the new MSA definitions, and the new wage survey data, these changes are added one at a time to the FY 1994 baseline model. The FY 1994 baseline simulation modeled total payments using the FY 1993 GROUPER (version 10.0), standardized amounts updated to FY 1994 but assigned on the basis of the old MSA definitions, and the FY 1993 wage indexes assigned based on geographic location according to the old MSA definitions and without regard to geographic reclassifications by the MGCRB. The FY 1994 baseline includes the higher DSH formula (although assigned based on old MSA definitions).

In column 1 of Table III, we present the combined effects of the revised DRG classification system, and the subsequent recalibration of the DRG weights incorporating these revised DRGs, as discussed in the preamble to this final rule. Section 1886(d)(4)(C)(i) of the Act requires us each year to make appropriate classification changes and to recalibrate the DRG weights in order to reflect changes in treatment patterns, technology, and any other factors that may change the relative use of hospital resources. The impact of DRG reclassification and recalibration on aggregate payments is required by section 1886(d)(4)(C)(iii) of the Act to be budget neutral.

The first line of Column 1 of Table III demonstrates that the overall effect of these changes is budget neutral. That is, the percentage change when adding the version 11.0 GROUPER to the FY 1994 baseline for all hospitals is 0.0. The redistributional impact of the final DRG classification and recalibration changes across hospital groupings is small. Other than a decrease of 0.3 percent for hospitals redesignated from urban to rural as a result of the 1990 census and rural DSH hospitals with fewer than 100 beds, and a 0.4 percent increase among urban hospitals in Puerto Rico, the impact of these changes is generally 0.2 percent or less. We project that most hospitals will experience essentially no effect. Where decreases occur, they are concentrated among small urban and rural hospitals. Payments to rural hospitals with fewer than 50 beds and rural hospitals with between 50 and 99 beds would be 0.2 percent and 0.1 percent lower, respectively, than they would be without the changes in DRG classifications and weights. Payments to urban hospitals with fewer than 100 beds would also, on average, be 0.1 percent lower. However, urban hospitals with 200 or more beds would experience increases in payments of 0.1 percent.

As discussed throughout this final rule, beginning October 1, 1993, we will adopt the revised MSA definitions based on 1990 census data that were announced by the Office of Management and Budget on December 28, 1992. Column 2 of Table III measures the change in payments attributable to hospitals changing from rural to urban (and vice versa), as a result of the new MSA designations, for purposes of the standardized amounts and DSH payments. It does not include the effect of the change in status on the hospital wage index. The overall effect on total payments of implementing the new MSA designations for purposes of the standardized amount and DSH payments is a 0.2 percent increase, due to the higher payments going to redesignated hospitals. This reflects a $148 million increase in total payments.

Table III shows that 108 hospitals were located in counties that were formerly designated as rural but are now urban. These hospitals will begin to receive either the other urban or the large urban standardized amount, whichever is applicable (just under one-third of these hospitals will receive the large urban standardized amount during FY 1994). They will also be considered urban hospitals for other payment purposes as well, such as determining eligibility for DSH payments. This category does not include 23 hospitals that have been treated as urban hospitals under section 1886(d)(8)(B) of the Act and are located in counties now designated as MSAs under the revised OMB definitions.

To demonstrate the impacts of the MSA changes on standardized amount and DSH payments, Column 2 shows the percentage changes from the previous simulation—the FY 1994 baseline plus the DRG reclassification and recalibration effects—by assigning the standardized amounts and paying DSH on the basis of the new MSA definitions. Hospitals that have been paid on the basis of the rural standardized amount and will now be paid as urban hospitals will receive an increase in payments of 8.1 percent. Hospitals in newly designated large urban areas receive payments that are 1.7 percent higher (the difference between the other urban and large urban standardized amounts is about 1.6 percent).

Curiously, hospitals that are in counties previously designated urban but now designated rural will experience an average payment increase of approximately 6.9 percent. As mentioned above, however, this effect is the result of one hospital in this category experiencing a payment increase in excess of 23 percent due to its corresponding change to an SCH. All 12 other hospitals in this group will receive decreases in payments. However, section 1886(d)(8)(A) of the Act provides for an adjustment to the payment amounts for these hospitals. In the first year that a hospital loses urban status, an eligible hospital will receive, in addition to its rural average standardized amount, two-thirds of the difference between its present rural standardized amount plus DSH payments and the urban standardized

amount plus DSH payments that it would have received if it had retained its urban status. In the second year, the hospital's additional payment will be one-third of the difference between the rural standardized amount plus DSH payments and the appropriate urban standardized amount plus DSH payments.

Because the urban/rural categories in Table III are based on the new MSAs, the payment increase for urban hospitals reflects the higher payments to rural hospitals in counties redesignated as urban and hospitals in other urban counties redesignated as large urban. Also, the urban/rural bed size and region categories demonstrate the positive impact of this change on urban hospitals and the generally negative impact on rural hospitals.

Urban hospitals with fewer than 100 beds and urban hospitals located in the New England census division experience 0.6 percent higher payments in this column. Among the 741 urban hospitals with fewer than 100 beds, 76 are located in counties that were previously rural but are now urban under the new MSA definitions, and 30 of these hospitals are in counties that were previously defined as other urban but are now large urban. Of the 172 urban hospitals in New England, 48 are hospitals that were previously in other urban counties that are now designated large urban.

Among hospitals grouped by their payment status, the most notable impact is on the category of urban hospitals with fewer than 100 beds that receive DSH payments. Payments to these hospitals increase 1.1 percent. Among the 140 hospitals in this category, 17 were in counties redesignated from rural to urban, and thus receive a DSH adjustment of 5 percent instead of 4 percent or none at all (5 of these hospitals did not meet the higher eligibility requirement for rural hospitals with fewer than 100 beds).

Among hospitals that were reclassified by the MGCRB for FY 1993 but not for FY 1994, 107 hospitals were in counties going either from rural to urban or from other urban to large urban. This helps explain the 1.1 percent higher payments for this group of hospitals.

As discussed in the preamble to this final rule, we are also assigning the wage index based on the new MSA definitions. Column 3 shows the impacts of this change. Beginning from a baseline using the new MSAs to assign the standardized amounts but using the old MSAs to assign the FY 1993 wage index values, we measure the payment impact of calculating and then assigning the wage indexes based on the new MSAs. The effect of the FY 1990 wage data is not shown here. Rather, for purposes of this column, we analyzed the effect of a wage index based on the new MSAs and 1988 survey data relative to a wage index based on the old MSAs and 1988 survey data.

Except for the categories identified in the previous column as benefitting from assigning the standardized amounts based on the new MSAs, the general effect of this change is to lower payments. Total payments are 0.1 percent less after this change. This does not mean, however, that actual total payments for FY 1994 will be less than they would be otherwise. As described in the addendum to this final rule, section 1886(d)(3)(E) of the Act requires that any updates or adjustments to the wage index must be made in a budget neutral manner. The new MSA assignments are only part of the changes being proposed for the wage index. We are also incorporating wage data for cost reporting periods beginnning in FY 1990. The effects of the new wage data are shown in column 4 of Table III and are discussed below. The net change in total estimated FY 1994 payments due to the proposed revisions to the wage index is budget neutral (−0.1 percent due to the new MSAs and 0.1 percent due to the new wage survey data).

The reason for the −0.1 percent change overall in Column 3 relates primarily to the hospitals moving to areas with higher wage index values and the characteristics of those hospitals relative to the areas they are leaving. The average hourly wage of hospitals in counties redesignated from rural to urban are generally higher than the average hourly wages of the hospitals in the rural areas to which they were previously designated, but are lower than the average hourly wages of the hospitals in the urban areas to which they are now designated. The percent increase in payments among this group of hospitals due to the new MSA wage index assignments is 7.2 percent. Among hospitals in counties previously designated as other urban that are now in large urban areas, the effect is 1.6 percent higher payments. This is only half of the effect displayed for this group of hospitals in the proposed rule. This results from the fact that, as a result of the Office of Management and Budget's revision of the MSA definitions in the interim, there were fewer hospital redesignations from other urban areas to large urban areas. The 13 hospitals that change from urban to rural experience a 6.0 percent decrease in payments as a result of receiving the rural wage index.

Most of the categories of hospitals noted previously as benefitting from the new MSA definitions benefit here as well: urban DSH hospitals with fewer than 100 beds (1.1 percent increase), hospitals reclassified for FY 1993 but not FY 1994 (1.0 percent), and urban hospitals with fewer than 100 beds (1.0 percent).

Significant impacts occur among other hospital groups as well. Payments to rural hospitals in the New England and South Atlantic census division are 0.5 percent and 0.6 percent lower, respectively, after determining the wage indexes based on the new MSAs. Payments to the 5 rural Puerto Rico hospitals increase by 0.9 percent, however. Among rural DSH hospitals, payments fall by 1.2 percent to those with 100 or more beds and by 0.5 percent to rural DSH hospitals with fewer than 100 beds. Also experiencing 0.6 percent payment declines here are rural hospitals that do not receive any special payment treatment.

The second major change to the FY 1994 wage index is that it is based on data submitted for hospital cost reporting periods beginning on or after October 1, 1989 and before September 30, 1990. The FY 1993 wage index is based on a HCFA survey of hospital wage and salary data for all hospitals subject to the prospective payment system with cost reporting periods ending in calendar year 1988. Column 4 displays the effects of the updated data. As noted in the previous discussion, the overall effect of this change is a 0.1 percent rise in payments, offsetting the −0.1 percent change attributable to the effects of the new MSA designations, so that the combined impact of the final changes to the wage index is 0.0.

The results illustrate that, relative to the 1988 data, the new survey data produce higher wage index values for hospitals in large urban areas and lower wage index values for hospitals in rural areas. Also, among the hospitals located in counties that change their MSA status, hospitals in areas moving from rural to urban have 1.2 percent higher payments when the new wage data are included. The hospitals redesignated from urban to rural lose 0.9 percent in payments under this column.

The negative impact on rural hospitals is consistent across various bed size categories, although there is some variation among rural hospitals by region. Puerto Rico, with only 5 rural hospitals, is helped considerably by the new survey data, showing an 11.6 percent rise in payments. We believe this is largely attributable to the inclusion of the contract wage data reported on the FY 1990 cost reports.

Payments to urban hospitals in Puerto Rico also increased, by 2.9 percent. Rural hospitals in the East North Central, East South Central, and West South Central census divisions experience the biggest declines among rural hospitals: −1.8 percent, −1.4 percent, and −1.3 percent, respectively.

Among urban hospitals by bedsize, those with 500 or more beds experience the greatest increases due to the new survey data (0.7 percent). Examining urban hospitals by region, the higher wage indexes among Puerto Rico's urban hospitals were noted above. Other urban regions benefitting from the new data are the New England and the Middle Atlantic census divisions, with 1.0 percent and 2.0 percent higher payments, respectively. On the other hand, payments fall for urban hospitals in the East North Central (−1.0 percent), East South Central (−0.9 percent), West North Central (−0.6 percent), and the West South Central (−0.8 percent).

Among special payment categories, the largest decreases are experienced by rural DSH hospitals with fewer than 100 beds (−1.2 percent), rural hospitals not eligible for any of the special rural hospital classifications (−1.2 percent), RRCs (−1.5 percent), and MDHs (−0.9 percent). The trend of urban hospitals experiencing increases and rural hospitals experiencing decreases continues within hospitals grouped by their FY 1994 reclassification status.

Column 5 of Table III shows the combined effects of the four changes discussed above. It corresponds to Column 4 in Table I. The percent changes in Column 4 are calculated by comparing the changes in FY 1994 payments after these changes to the post-Public Law 103–66 FY 1994 baseline before making any of these changes. While the sum of the changes shown in Columns 1 through 4 generally equal the overall changes shown in this column, they may not add exactly. This results from rounding variances and interactive effects. For example, the DRG and wage index changes are multiplicative rather than additive.

TABLE III.—IMPACT ANALYSIS OF FINAL OPERATING COST

[Prospective Payment System Changes for FY 1994]

	No. of hosps.[1]	Recalibration change[2] (1)	New MSA: Standard amounts[3] (2)	New MSA: Wage index[4] (3)	New wage survey data[5] (4)	Combined final rule changes[6] (5)
By geographic location:						
All Hospitals	5,302	0.0	0.2	−0.1	0.1	0.2
Large urban areas (Populations over 1 million)	1,636	0.1	0.3	−0.1	0.8	1.0
Other urban areas (Populations of 1 million or fewer)	1,344	0.0	0.2	0.0	−0.6	−0.4
Rural areas	2,322	−0.1	0.0	−0.2	−1.1	−1.4
Hospitals Changing MSA Due to 1990 Census:						
Rural to urban	108	0.0	8.1	7.2	1.2	17.3
Urban to rural	13	−0.3	6.9	−6.0	−0.9	−0.7
Other urban to large urban	143	0.1	1.7	1.6	0.2	3.5
Urban Hospitals	2,980	0.1	0.3	−0.1	0.2	0.5
0–99 beds	750	−0.1	0.6	1.0	−0.1	1.5
100–199 beds	899	0.0	0.4	0.1	0.1	0.7
200–299 beds	611	0.1	0.3	−0.1	0.0	0.3
300–499 beds	529	0.1	0.2	−0.2	0.1	0.2
500 or more beds	191	0.1	0.3	−0.3	0.7	0.7
Rural Hospitals	2,322	−0.1	0.0	−0.2	−1.1	−1.4
0–49 beds	1,180	−0.2	−0.2	−0.2	−1.0	−1.6
50–99 beds	708	−0.1	−0.2	−0.3	−1.0	−1.6
100–149 beds	222	0.0	−0.1	−0.3	−0.9	−1.3
150–199 beds	106	0.0	0.0	−0.1	−1.0	−1.2
200 or more beds	106	0.0	0.3	−0.2	−1.2	−1.0
Urban by region:.						
New England	172	0.0	0.6	−0.1	1.0	1.5
Middle Atlantic	447	0.2	0.4	−0.2	2.0	2.3
South Atlantic	453	0.0	0.4	0.0	0.4	0.9
East North Central	498	0.1	0.2	0.0	−1.0	−0.8
East South Central	170	0.0	0.4	0.0	−0.9	−0.4
West North Central	187	0.0	0.1	−0.1	−0.6	−0.6
West South Central	380	0.1	0.1	0.1	−0.8	−0.6
Mountain	121	0.0	0.1	−0.2	−0.3	−0.4
Pacific	502	0.0	0.1	−0.1	0.2	0.2
Puerto Rico	50	0.4	0.4	−0.3	2.9	3.4
Rural by region:.						
New England	53	−0.1	0.0	−0.5	0.9	0.3
Middle Atlantic	85	0.0	0.9	0.0	0.6	1.4
South Atlantic	302	0.0	−0.1	−0.6	−1.2	−1.9
East North Central	313	−0.1	−0.1	0.0	−1.8	−1.9
East South Central	289	−0.2	−0.2	−0.2	−1.4	−2.0
West North Central	542	−0.1	−0.1	0.0	−0.9	−1.1
West South Central	361	−0.1	−0.1	−0.2	−1.3	−1.7
Mountain	227	−0.1	−0.1	−0.1	−1.1	−1.4
Pacific	145	0.0	−0.1	−0.3	−1.2	−1.7
Puerto Rico	5	−0.1	−0.2	0.9	11.6	12.3

TABLE III.—IMPACT ANALYSIS OF FINAL OPERATING COST—Continued

[Prospective Payment System Changes for FY 1994]

	No. of hosps.[1]	Recalibration change[2] (1)	New MSA: Standard amounts[3] (2)	New MSA: Wage index[4] (3)	New wage survey data[5] (4)	Combined final rule changes[6] (5)
By payment classification:						
All hospitals	5,302	0.0	0.2	−0.1	0.1	0.2
Large urban areas (Populations over 1 million)	1,816	0.1	0.3	−0.1	0.7	0.9
Other urban areas (Populations of 1 million or fewer)	1,421	0.0	0.2	0.0	−0.7	−0.5
Rural areas	2,065	−0.1	0.0	−0.2	−1.0	−1.4
Teaching status:						
Non-teaching	4,261	0.0	0.3	0.1	−0.2	0.1
Fewer than 100 residents	821	0.1	0.2	−0.2	−0.1	−0.1
100 or more residents	220	0.1	0.3	−0.4	1.0	1.0
Disproportionate share hospitals (DSH):						
Non-DSH	3,481	0.0	0.2	−0.1	−0.1	0.0
Urban DSH:.						
100 beds or more	1,302	0.1	0.3	−0.1	0.3	0.6
Fewer than 100 beds	140	−0.1	1.1	1.1	0.0	2.2
Rural DSH:						
Sole Community (SCH)	112	−0.1	−0.1	−0.1	−0.6	−0.9
Referral centers (RRC)	48	0.0	0.1	−0.2	−1.3	−1.4
Other rural DSH hosp:.						
100 beds or more	60	−0.1	−0.4	−1.2	−0.7	−2.3
Fewer than 100 beds	159	−0.3	−0.3	−0.5	−1.2	−2.3
Urban teaching and DSH:						
Both teaching and DSH	605	0.1	0.2	−0.3	0.5	0.6
Teaching and no DSH	386	0.1	0.2	−0.2	0.0	0.0
No teaching and DSH	837	0.0	0.5	0.2	−0.1	0.7
No teaching and no DSH	1,409	0.0	0.2	0.1	0.1	0.4
Rural hospital types:						
Nonspecial Status Hospitals	843	−0.1	−0.3	−0.6	−1.2	−2.2
RRC	156	0.0	0.1	0.0	−1.5	−1.4
SCH	558	−0.1	0.4	−0.1	−0.4	−0.2
MDH	461	−0.2	−0.2	−0.2	−0.9	−1.4
SCH and RRC	47	0.0	0.1	−0.1	−0.4	−0.5
SCH and MDH	1,066	−0.1	0.1	−0.1	−0.6	−0.6
Type of ownership:						
Voluntary	3,059	0.1	0.2	−0.1	0.0	0.2
Proprietary	776	0.0	0.1	−0.1	0.4	0.4
Government	1,467	0.0	0.3	−0.1	0.0	0.2
Medicare utilization as a percent of inpatient days:						
0–25	309	0.0	0.1	−0.2	0.2	0.4
25–50	1,614	0.1	0.2	−0.2	0.3	0.4
50–65	2,301	0.0	0.3	0.0	−0.2	0.1
Over 65	1,012	0.0	0.2	−0.1	−0.1	0.0
Hospitals reclassified by the Medicare geographic Review board:						
Reclassification status during FY 93 and FY 94:						
Reclassified during both FY 93 and FY 94	551	0.0	0.3	−0.1	0.3	0.6
Urban	188	0.1	0.5	−0.1	1.3	1.8
Rural	363	−0.1	0.0	−0.1	−1.2	−1.4
Reclassified during FY 94 only	114	0.1	0.2	−0.2	0.2	0.3
Urban	41	0.1	0.2	−0.2	0.6	0.7
Rural	73	−0.1	−0.1	−0.1	−1.0	−1.2
Reclassified during FY 93 only	672	0.0	0.8	1.0	0.0	1.8
Urban	278	0.1	1.1	1.6	0.5	3.4
Rural	394	0.0	0.3	−0.2	−1.1	−1.0
FY 94 Reclassifications:						
All Reclassified hosp	669	0.0	0.3	−0.1	0.3	0.5
All nonreclassified hospitals	4,606	0.0	0.2	−0.1	0.0	0.2
All urban reclassified hospitals	230	0.1	0.5	−0.1	1.2	1.6
Urban nonreclassified hospitals	2,750	0.1	0.3	−0.1	0.1	0.4
All reclassified rural hospitals	439	−0.1	0.0	−0.1	−1.2	−1.4
Rural nonreclassified hospitals	1,856	−0.1	0.0	−0.3	−1.0	−1.4
Other reclassified hospitals (section 1886(D)(8)(B))	27	−0.1	0.1	0.0	−1.3	−1.3

[1] Because data necessary to classify some hospitals by category were missing, the total number of hospitals in each category may not equal the national total. Hospital-specific data and discharges data are from FY 1992, and hospital cost report data are from reporting periods beginning in FY 1991.

[2] Recalibration of the DRG weights and classification changes are based on FY 1992 MEDPAR data and are performed annually in accordance with section 1886(d)(4)(C) of the Act.

TABLE III.—IMPACT ANALYSIS OF FINAL OPERATING COST

[Prospective Payment System Changes for FY 1994]

[3] This column reflects all of the payment impacts of the new MSA definitions based on the 1990 census except those related to the wage index.

[4] This column shows the payment effects of the new MSA definitions on the wage index.

[5] This column displays the combined effects of the changes to the prospective payment system described in this final rule. Although it incorporates all of the changes displayed in columns 2 through 4, the sum of those columns may be slightly different from the percentage changes shown here, due to rounding errors and interactive effects.

Table IV presents the projected average payments per case under the changes for FY 1994 for urban and rural hospitals and for the different categories of hospitals shown in Tables I and III. It compares the projected payments with the average estimated per case payments that were during FY 1993. Thus, this table presents, in terms of the average dollar amounts paid per discharge, the combined effects of the changes presented in Table I. That is, the percentage changes shown in the last column of Table I equal the percentage change in average payments from October 1, 1993 to October 1, 1994.

TABLE IV.—IMPACT ANALYSIS OF FINAL OPERATING COST PROSPECTIVE PAYMENT SYSTEM CHANGES FOR FY 1994

	Number of hospitals (1)	Average FY 1993 payments per case (2)	Average FY 1994 payments per case (3)	All changes (4)
By geographic location:				
All hospitals	5,302	5,874	6,058	3.1
Large urban areas (populations over 1 million)	1,636	6,786	7,074	4.2
Other urban areas (populations of 1 million or fewer)	1,344	5,731	5,875	2.5
Rural areas	2,322	4,000	4,014	0.3
Hospitals changing MSA due to 1990 census:				
Rural to urban	108	4,545	4,987	9.7
Urban to rural	13	4,088	4,171	2.1
Other urban to large urban	143	6,090	6,413	5.3
Urban hospitals	2,980	6,328	6,553	3.6
0–99 beds	750	4,379	4,518	3.2
100–199 beds	899	5,352	5,539	3.5
200–299 beds	611	5,864	6,051	3.2
300–499 beds	529	6,650	6,883	3.5
500 or more beds	191	8,153	8,491	4.1
Rural hospitals	2,322	4,000	4,014	0.3
0–49 beds	1,180	3,347	3,340	−0.2
50–99 beds	708	3,696	3,710	0.4
100–149 beds	222	4,129	4,173	1.1
150–199 beds	106	4,265	4,250	−0.3
200 or more beds	106	4,817	4,840	0.5
Urban by region:				
New England	172	6,635	6,850	3.2
Middle Atlantic	447	6,921	7,316	5.7
South Atlantic	453	6,006	6,228	3.7
East North Central	498	6,181	6,304	2.0
East South Central	170	5,537	5,716	3.2
West North Central	187	6,165	6,304	2.3
West South Central	380	5,817	5,986	2.9
Mountain	121	6,195	6,355	2.6
Pacific	502	7,164	7,423	3.6
Puerto Rico	50	2,425	2,577	6.3
Rural by Region:				
New England	53	4,725	4,898	3.7
Middle Atlantic	85	4,428	4,534	2.4
South Atlantic	302	4,100	4,105	0.1
East North Central	313	4,060	4,033	−0.6
East South Central	289	3,664	3,667	0.1
West North Central	542	3,727	3,764	1.0
West South Central	361	3,703	3,685	−0.5

TABLE IV.—IMPACT ANALYSIS OF FINAL OPERATING COST PROSPECTIVE PAYMENT SYSTEM CHANGES FOR FY 1994—Continued

	Number of hospitals (1)	Average FY 1993 payments per case (2)	Average FY 1994 payments per case (3)	All changes (4)
Mountain	227	4,301	4,290	−0.3
Pacific	145	4,830	4,836	0.1
Puerto Rico	5	1,561	1,910	22.4
By payment classification:				
All hospitals	5,302	5,874	6,058	3.1
Large urban areas (populations over 1 million)	1,816	6,670	6,950	4.2
Other urban areas (populations of 1 million or fewer)	1,421	5,608	5,741	2.4
Rural areas	2,065	3,980	3,973	−0.2
Teaching Status:				
Non-teaching	4,261	4,895	5,025	2.7
Fewer than 100 residents	821	6,319	6,503	2.9
100 or more residents	220	9,584	10,000	4.7
Disproportionate share hospitals (DSH):				
Non-DSH	3,481	5,283	5,410	2.4
Urban DSH:.				
100 Beds or more	1,302	6,869	7,148	4.1
Fewer than 100 beds	140	4,190	4,370	4.3
Rural DSH:.				
Sole community (SCH)	112	3,823	3,887	1.7
Referral centers (RRC)	48	4,936	4,884	−1.1
Other rural DSH hospitals:.				
100 beds or more	60	3,526	3,553	0.8
Fewer than 100 beds	159	3,117	3,122	0.2
Urban teaching and DSH:.				
Both teaching and DSH	605	7,869	8,198	4.2
Teaching and no DSH	386	6,530	6,710	2.8
No teaching and DSH	837	5,482	5,692	3.8
No teaching and no DSH	1,409	5,103	5,263	3.1
Rural hospital types:.				
Nonspecial status hospitals	843	3,459	3,455	−0.1
RRC	156	4,686	4,641	−1.0
SCH	558	3,994	4,074	2.0
MDH	461	3,459	3,364	−2.7
SCH and RRC	47	4,813	4,841	0.6
SCH and MDH	1,066	3,982	3,997	0.4
Type of ownership:.				
Voluntary	3,059	6,016	6,201	3.1
Proprietary	776	5,373	5,566	3.6
Government	1,467	5,549	5,720	3.1
Medicare utilization as a percent of inpatient days:.				
0–25	309	7,551	7,892	4.5
25–50	1,614	6,774	7,022	3.7
50–65	2,301	5,371	5,519	2.7
Over 65	1,012	4,710	4,793	1.8
Hospitals reclassified by the medicare geographic review board:				
Reclassification status during FY93 and FY94:				
Reclassified during both FY93 and FY94	551	5,457	5,679	4.1
Urban	188	6,429	6,768	5.3
Rural	363	4,413	4,508	2.2
Reclassified during FY94 only	114	5,414	5,820	7.5
Urban	41	6,289	6,735	7.1
Rural	73	3,823	4,157	8.8
Reclassified during FY93 only	672	5,114	5,121	0.2
Urban	278	5,740	5,846	1.9
Rural	394	4,239	4,109	−3.1
FY94 reclassifications:				
All reclassified hospitals	669	5,450	5,697	4.5
All nonreclassified hospitals	4,606	5,941	6,116	3.0
All urban reclassified hospitals	230	6,406	6,762	5.6
Urban nonreclassified hospitals	2,750	6,321	6,534	3.4
All reclassified rural hospitals	439	4,349	4,470	2.8
Rural nonreclassified hospitals	1,856	3,838	3,803	−0.9
Other reclassified hospitals (section 1886(D)(8)(B))	27	4,378	4,445	1.5

VII. Impact of Changes in the Capital Prospective Payment System

A. General Considerations

Our impact analysis of payment changes for capital-related costs is limited by the lack of hospital-specific data on future hospital capital investments. The lack of hospital-specific data limits our impact analysis in the following ways:

• Major investment in hospital capital assets (for example, in building and major fixed equipment) occurs at irregular intervals. As a result, there can be significant variation in the growth rates of Medicare capital-related costs per case among hospitals. We do not have the necessary hospital-specific budget data to project the hospital capital growth rate for an individual hospital.

• Moreover, our policy of recognizing certain obligated capital as old capital complicates the problem of projecting future capital-related costs for individual hospitals. Under § 412.302(c), a hospital was required to notify its intermediary that it has obligated capital by the later of October 1, 1992 or 90 days after the beginning of the hospital's first cost reporting period under the capital prospective payment system. The intermediary must then notify the hospital of its determination whether the criteria for recognition of obligated capital have been met by the later of the end of the hospital's first cost reporting period subject to the capital prospective payment system or 9 months after the receipt of the hospital's notification. The amount that is recognized as old capital is limited to the lesser of the actual allowable costs when the asset is put in use or the estimated costs of the capital expenditure at the time it was obligated. Intermediary determinations regarding obligated capital are still being reported to us. Therefore, we do not know actual obligated capital commitments to be used in the FY 1994 capital cost projections. Without knowing what proportion of an individual hospital's future capital spending will qualify as old capital, we cannot accurately project how an individual hospital will be affected by the transition payment policies.

In Table V of this appendix, we present the redistributive effects that are expected to occur between "hold-harmless" hospitals and "fully prospective" hospitals in FY 1994. In addition, we have integrated sufficient hospital-specific information into our actuarial model to project the impact of FY 1994 capital payment policies by the standard prospective payment system hospital groupings. We caution that while we now have actual data on the effects of the transition payment methodology and interim payments under the capital prospective payment system and cost report data for most hospitals, we need to generate randomly hypothetical data for the change in old capital costs, new capital costs for each year, and obligated amounts that will be put in use for patient care services and recognized as old capital each year. This means that we continue to be unable to predict accurately an individual hospital's FY 1994 capital costs; however, with the more recent data on the experience to date under the capital prospective payment system, there is adequate information to estimate the aggregate impact on most hospital groupings.

Comment: One commenter objected to our use of hypothetical data for the changes in old capital costs, new capital costs, and obligated amounts that will be put in use for patient care. The commenter stated that changes should not be proposed on the basis of incomplete data, and urged HCFA to obtain the requisite data.

Response: We have no choice but to use randomly generated data for these purposes at this time. The law requires us to estimate total hospital capital costs in order to set the budget neutrality target each year. In order to make that estimate, estimates of old capital changes, new capital changes, and obligated capital are necessary. In the absence of a substantial data base on which to base projections of these factors, we employ the random generation method described above. We believe that this method allows us to make the most reliable estimates possible. However, we have made every effort to progressively incorporate as much actual data as possible into the model. We have used multiple sources for actual data such as provider-specific files, cost reports, and capital audit files. We have also revised the cost reports to collect data on old capital, new capital, and obligated capital amounts separately. However, we do not yet have actual cost report data on these factors because the cost reports for the first years under capital-PPS have not yet been completely filed. As these cost reports become available we will be able to incorporate actual experience into our analysis.

We have revised Table V after the publication of the proposed rule to provide some information on the effects of the 7.4 percent reduction to the standard Federal rate required under section 13501(a)(3) of Public Law 103–66. (Table V in this final rule was presented as Table IV in the proposed rule.) Specifically, we are presenting separate blocks in the table to show (1) what the effects on FY 1994 payments would have been in the absence of the 7.4 percent reduction to the standard Federal rate, and (2) the effects of all changes, including the 7.4 percent reduction to the standard rate, on payments in FY 1994. We have also added Table Va to provide more detailed information on the effects of Public Law 103–66. In Tables V and Va, we used the same outlier effects that we used in conjunction with setting the final rate for FY 1994 (that is, the rate with the effects of the 7.4 percent reduction to the standard rate). If we had recalibrated outliers for the unreduced Federal rate, the budget neutrality factor and the estimated rate might have been slightly different. However, the estimates in Tables V and Va of the effects without the reduction to the standard Federal rate are adequate for the purpose of evaluating the relative impact of the 7.4 percent reduction to the standard Federal rate.

We present the transition payment methodology by hospital grouping in Table VI. In Table VII, we present the results of the cross-sectional analysis using the results of our actuarial model. This table presents the aggregate impact of the FY 1994 payment policies. We have also revised Table VII to provide information on the effects of Public Law 103–66. In Table VIII, we present a simulation of payments based on 100 percent of the Federal rate. This simulation shows the average percentage change in the 100 percent Federal rate payments attributable to the revised rate and changes in payment adjustments.

B. Projected Impact Based on the FY 1994 Actuarial Model

1. *Assumptions.* In this impact analysis, we model dynamically the impact of the capital prospective payment system from FY 1993 to FY 1994 using an actuarial model. The FY 1994 actuarial model, described in appendix B of this final rule, integrates actual data from individual hospitals with randomly generated capital cost amounts and ratios developed from the results of the capital acquisition model used in the August 30, 1991 final rule. We have available capital cost data from cost reports beginning in FY 1989, FY 1990, and FY 1991 received through the June 30, 1993 update of the Hospital Cost Reporting Information System (HCRIS), interim payment data for hospitals already receiving capital prospective payments through PRICER, and data reported by the intermediaries

that include the hospital-specific rate determinations that have been made through June 1993 in the Provider-Specific file. We used these data to determine the FY 1994 capital rates. However, we do not have individual hospital data on old capital changes, new capital formation, and obligated capital. Because we can combine actual data for individual hospitals with the results from the capital acquisition model, we need to generate randomly only the old and new capital changes and obligated capital. All Federal rate payment parameters are assigned to the applicable hospital.

For purposes of this impact analysis, the FY 1994 actuarial model includes the following assumptions:

• Medicare inpatient capital costs per discharge will increase at the following rates during these periods:

Fiscal year	Average percentage increase in capital costs per discharge
1993	8.24
1994	9.45

• The Medicare case-mix index will increase by 1.3 percent in FY 1993 and 2.0 percent in FY 1994 and thereafter.

• The Federal capital rate as well as the hospital-specific rate will be updated by the 2-year moving average increase in Medicare capital costs per case, net of case mix change increase, between FY 1989 and FY 1991. The FY 1994 update is 3.04 percent (see Addendum, Part III).

• Consistent with the budget neutrality constraints provided in section 1886(g)(1)(A) of the Act, estimated aggregate Medicare payments under the capital prospective payment system in FY 1994 will equal 90 percent of the total amount that would have payable for Medicare inpatient capital-related costs on a reasonable cost basis. The budget neutrality adjustment factor is applied to the Federal and hospital-specific rates only and not to the hold-harmless payment for old capital.

2. *Results.* We have used the actuarial model to estimate the change in payment for capital-related costs from FY 1993 to FY 1994. To show the effect of the capital prospective payment system on low capital cost hospitals and high capital cost hospitals, we are presenting separately in Table V the results of our simulation for low capital cost and high capital cost hospitals. We consider a hospital to be a low capital cost hospital if, based on a comparison of its initial hospital-specific rate and the applicable Federal rate, it will be paid under the fully prospective payment methodology. A high capital cost hospital is a hospital that, based on its initial hospital-specific rate, will be paid under the hold-harmless payment methodology. Based on our actuarial model, the breakdown of hospitals is as follows:

CAPITAL TRANSITION PAYMENT METHODOLOGY

Type of hospital	Percent of hospitals	FY 1994 percent of discharges	FY 1994 percent of capital costs	FY 1994 percent of capital payments
Low cost hospital	69	65	53	56
High cost hospital	31	35	47	44

A low capital cost hospital may request to have its hospital-specific rate redetermined based on old capital costs in the current year, through the later of the hospital's cost reporting period beginning in FY 1994 or the first cost reporting period beginning after obligated capital comes into use (within the limits established in § 412.302(c) for putting obligated capital in use for patient care). If the redetermined hospital-specific rate is greater than the adjusted Federal rate, these hospitals will be paid under the hold-harmless payment methodology. Public Law 103–66 requires a 7.4 percent reduction to the standard Federal rate. Public Law 103–66 also provides for a special redetermination of hospital payment methodologies to take into account that reduction. We discuss this provision in section V.D of the Preamble to this final rule. Regardless of whether the hospital would become a hold-harmless payment hospital as a result of a redetermination in FY 1993 or FY 1994, we have continued to show these hospitals as low capital cost hospitals in Table V.

The following table shows our estimate of the percentage of low capital cost hospitals that would be paid under the hold-harmless payment methodology through a hospital-specific rate redetermination and the basis of their payment under the hold-harmless payment methodology. The table includes the effects of Public Law 103–66.

Fiscal year	Percent of low cost hospitals that qualify for hold-harmless methodology	Of these, percent that are paid:	
		100% Federal rate	Hold-harmless
1993	3.4	37	63
1994	11.3	39	61

The large increase in the number of low cost hospitals that qualify for the hold-harmless methodology is primarily a result of the 7.4 percent reduction to the standard Federal rate. As a result of the redeterminations required to take into account that reduction, a large number of hospitals that would not otherwise have qualified as hold-harmless will receive payment under the hold-harmless methodology.

Assuming no behavioral changes in capital expenditures, Table V displays the percentage change in payments from FY 1993 to FY 1994 using the above described actuarial model.

TABLE V.—FINAL CAPITAL BUDGET NEUTRALITY FOR FY 1993–1994

[Impact of Changes for FY 1994 on Payments Per Discharge]

	No. of hosps.	Discharges	Adjusted federal payment	Average federal percent	Hospital specific payment	Hold-harmless payment	Exceptions payment	Total payment	
FY 1993 Payments Per Discharge									
Low Cost Hospitals	3,629	6,730,867	$140.93	21.44	$359.64	$15.03	$3.63	$519.25	.....
Fully Prospective	3,361	6,157,778	131.73	20.00	373.75	.....	1.95	507.45	.....
Rebase—Fully Prospective	146	310,309	129.94	20.00	384.06	.....	34.36	548.37	.....
Rebase—100% Federal Rate	45	128,095	651.51	100.00	.....	651.51	.....	.....	.....
Rebase—Hold Harmless	77	134,685	101.53	16.45	.....	751.38	12.88	865.80	.....
High Cost Hospitals	1,640	3,654,435	303.71	45.26	.....	485.73	1.97	791.42	.....
100% Federal Rate	478	1,269,750	694.10	100.00	.....	.....	.....	694.10	.....
Hold Harmless	1,162	2,384,684	95.84	14.55	.....	744.37	3.02	843.23	.....
Total Hospitals	5,269	10,385,303	198.21	29.93	233.08	180.66	3.05	615.02	.....
FY 1994 Payments Per Discharge Before Effects of OBRA '93									
Low Cost Hospitals	3,629	6,733,457	$194.64	30.84	$300.47	$17.80	$29.22	$542.15	4.41
Fully Prospective	3,353	6,151,812	189.61	30.00	312.72	.....	26.60	528.94	4.23
Rebase—Fully Prospective	149	311,273	186.81	30.00	319.41	.....	86.07	592.30	8.00
Rebase—100% Federal Rate	33	91,436	634.15	100.00	.....	.....	.....	634.15	−2.66
Rebase—Hold Harmless	94	178,935	156.86	25.83	.....	670.13	35.23	862.22	−0.41
High Cost Hospitals	1,640	3,655,773	318.04	48.66	.....	470.20	13.39	801.64	1.29
100% Federal Rate	439	1,168,288	691.29	100.00	.....	.....	.....	691.29	−0.40
Hold Harmless	1,201	2,487,485	142.73	22.45	.....	691.04	19.69	853.47	1.21
Total Hospitals	5,269	10,389,230	238.06	37.26	197.74	176.99	23.65	633.45	2.99
FY 1994 Payments Per Discharge After Effects of OBRA '93									
Low Cost Hospitals	3,629	6,733,457	$211.18	34.63	$272.25	$36.80	$27.32	$547.56	5.45
Fully Prospective	3,087	5,586,551	183.48	30.00	312.56	.....	25.65	522.70	3.00
Rebase—Fully Prospective	132	271,737	182.70	30.00	320.25	.....	77.61	580.56	5.87
Rebase—100% Federal Rate	161	427,583	623.69	100.00	.....	.....	.....	623.69	−4.26
Rebase—Hold Harmless	249	447,584	180.12	31.40	.....	553.73	31.27	765.12	−11.62
High Cost Hospitals	1,640	3,655,773	291.29	46.12	.....	486.52	13.83	791.65	0.02
100% Federal Rate	389	1,053,983	676.59	100.00	.....	.....	.....	676.59	−2.52
Hold Harmless	1,251	2,601,790	135.20	22.04	.....	683.62	19.43	838.26	−0.59
Total Hospitals	5,269	10,389,230	239.37	38.77	176.45	195.05	22.57	633.45	2.99

TABLE V–A.—IMPACT OF OBRA '93 ON FY 1994 PAYMENTS PER DISCHARGE

	Remain on fully prospective	Fully prospective to 100% federal	Fully prospective to hold harmless	Remain on 100% federal	100% federal to hold harmless	Remain on hold harmless	All hospitals
Number of Hospitals	3,219	129	154	421	51	1,295	5,269
Number of Discharges	5,858,288	336,393	268,403	1,145,173	114,551	2,666,420	10,389,230
Adjusted Federal Payment:							
Before OBRA	$189.83	$194.46	$175.43	$694.95	$609.10	$143.68	$238.06
After OBRA	183.44	626.42	199.26	671.58	75.79	138.85	239.37
Percent Change	−3.3	222.1	13.5	−3.3	−87.5	−3.3	0.5
Average Federal Percent:							
Before OBRA	30.0	30.0	30.0	100.0	100.0	22.6	37.2
After OBRA	30.0	100.0	35.2	100.0	12.8	22.6	38.7
Hospital Specific Payment:							
Before OBRA	$299.85	$445.55	$434.96	.....	.....	.....	$194.74
After OBRA	312.92	.....	.....	.....	.....	176.45	.....
Percent Change	4.3	−100.0	−100.0	.....	.....	.....	−9.3

TABLE V–A.—IMPACT OF OBRA '93 ON FY 1994 PAYMENTS PER DISCHARGE—Continued

	Remain on fully prospective	Fully prospective to 100% federal	Fully prospective to hold harmless	Remain on 100% federal	100% federal to hold harmless	Remain on hold harmless	All hospitals
Hold Harmless Payment:							
Before OBRA	.....	.....	.....	.....	.....	$689.63	$176.99
After OBRA	.....	.....	$476.40	.....	$521.54	689.63	195.05
Percent Change	.....	.....	.....	.....	.....	0.0	10.2
Exceptions Payment:							
Before OBRA	$29.68	.....	$61.69	.....	.....	$20.73	$23.65
After OBRA	29.01	.....	27.82	.....	.....	21.41	22.57
Percent Change	−2.2	.....	−54.8	.....	.....	3.2	−4.5
Total Payment:							
Before OBRA	$519.37	$640.02	$672.09	$694.95	$609.10	$854.06	$633.45
After OBRA	525.39	626.42	703.49	671.58	597.33	849.90	633.45
Percent Change	1.1	−2.1	4.6	−3.3	−1.9	−0.4	0.0

Under section 1886(g)(1)(A) of the Act, aggregate payments under the capital prospective payment system for FY 1992 through 1995 are to equal 90 percent of what would have been payable on a reasonable cost basis in each year, respectively. (See Addendum, Part III for a full discussion of the capital budget neutrality provision.) We project that in FY 1993 aggregate payments under the capital prospective payment system will be 95.64 percent of reasonable costs, or 6.27 percent higher than the 90 percent target. We also estimate an increase in capital cost per case of 9.45 percent from FY 1993 to FY 1994. To achieve budget neutrality in FY 1994, we estimate there would be an aggregate 2.99 percent increase in Medicare capital payments over the FY 1993 payments (1.0945/1.0627 = 1.0299).

We project that, including the effects of Public Law 103–66, high capital cost hospitals will experience an average case-weighted increase of 0.02 percent and low capital cost hospitals will experience an average increase in payments per discharge of 5.45 percent (compared to 1.29 percent and 4.41 percent, respectively, in the absence of the reduction to the standard Federal rate required by Public Law 103–66). The relatively greater gain for low-cost hospitals is the result of numerous hospitals from this category moving into the more advantageous hold-harmless payment methodology as a result of hospital-specific rate redeterminations and the payment methodology redeterminations provided under Public Law 103–66.

For hospitals paid under the fully prospective payment methodology, the Federal rate payment percentage will increase from 20 percent to 30 percent and the hospital-specific rate payment percentage will decrease from 80 percent to 70 percent in FY 1994.

The Federal rate payment percentage for a hospital paid under the hold-harmless payment methodology is based on the hospital's ratio of new capital costs to total capital costs. The average Federal rate payment percentage for those hospitals receiving a hold-harmless payment for old capital is estimated to increase from 14.55 percent to 22.04 percent. We estimate the percentage of hold-harmless hospitals paid based on 100 percent of the Federal rate will decrease from 29 percent to 24 percent. (The decrease would have been only to 27 percent in the absence of the 7.4 percent reduction to the Federal rate.)

The average hospital-specific rate payment per discharge falls from $233.08 in FY 1993 to $176.45 in FY 1994. The average hospital-specific rate payment per discharge would have been $194.74 in the absence of Public Law 103–66. A decline in the average hospital-specific rate payment per discharge from FY 1993 to FY 1994 is to be expected because of the reduction in the hospital-specific rate blend percentage and the 2.16 percent decrease in the hospital-specific rate from FY 1993 to FY 1994. The average hospital-specific rate payment per discharge is also lower than it would have been in the absence of Public Law 103–66, despite the fact that an indirect result of the 7.4 percent reduction to the standard Federal rate is a relative increase in the hospital-specific rate (a lesser reduction from FY 1993 to FY 1994 than would otherwise have been the case). That is because one result of Public Law 103–66 is a redetermination of the applicable hospital payment methodology to take into account the reduction to the standard Federal rate. As a result of those redeterminations, many hospitals previously paid under the fully prospective methodolgy will receive payment under the hold-harmless payment methodology. The hospitals that qualify to switch from fully prospective to hold-harmless will be those among the fully prospective hospitals with relatively high hospital-specific rates. Those hospitals that become hold-harmless will no longer receive any portion of their payments based on the hospital-specific rate. The remaining hospitals in the fully prospective group will thus have a lower average hospital-specific rate payment per discharge despite the fact that each of them will have a higher hospital-specific rate per discharge payment than in the absence of Public Law 103–66. Indeed, Table Va shows just this latter result. The average hospital-specific rate payment per discharge increases 4.3 percent (from $299.85 to $312.92) for those hospitals that remain fully prospective after the effects of Public Law 103–66 are taken into account.

Fully prospective hospitals that qualify for a redetermination and then receive hold-harmless payments would have experienced a 0.41 percent decline in payments in FY 1994 in the absence of Public Law 103–66. That same category of hospitals can be expected to experience an 11.62 percent decrease in FY 1994 after the effects of Public Law 103–66. Both declines reflect the movement into that category, intensified by the redeterminations provided under Public Law 103–66, of hospitals with old capital amounts relatively smaller than the hospitals previously in that category. These hospitals reduce the average hold-harmless payment per discharge for the larger resulting group.

Table Va shows a different aspect of these and other effects of Public Law 103–66. This table shows the effects separately for six stable categories of hospitals. As a result, none of the results in Table Va is affected by changing membership in any category, as is the

case in Table V. The six categories are: (1) Hospitals that are fully prospective before and after the effects of Public Law 103–66; (2) hospitals that switch from fully prospective to receiving payments based on 100% of the Federal rate as a result of Public Law 103–66; (3) hospitals that switch from fully prospective to receiving hold-harmless payments as a result of Public Law 103–66; (4) hospitals receiving payments based on 100% of the Federal rate before and after Public Law 103–66; (5) hospitals that switch from receiving payments based on 100% of the Federal rate to hold-harmless payments as a result of Public Law 103–66; and (6) those hospitals that were hold-harmless before Public Law 103–66 and remain hold-harmless (the effects of Public Law 103–66 produce no change in payment methodology for these hospitals). The table shows the difference, for each category, between the payments hospitals would have received in the absence of Public Law 103–66, and the payments they receive as a result of Public Law 103–66.

Hospitals that remain fully prospective will receive an average payment per discharge 1.1 percent higher than they would have without Public Law 103–66. The increase results from a 4.3 percent higher average hospital-specific rate payment per discharge, partially offset by a 3.3 percent lower Federal rate payment per discharge. The higher average hospital-specific rate payment per dischage is the result of the relative increase in the hospital-specific rate discussed above (i.e., the hospital-specific rate is higher than it would have been in the absence of Public Law 103–66 as an indirect effect of the 7.4 percent reduction to the standard Federal rate).

Hospitals that switch from fully prospective to 100% of the Federal rate will receive average payments per discharge 2.1 percent lower than the fully prospective payments they would have received in the absence of Public Law 103–66. We used our model to conduct a special analysis of the 129 hospitals that fall into this category. We found that about 92 of these hospitals (71 percent) will receive payments at 100% of the Federal rate that exceed their total Medicare capital costs. An additional 22 of the hospitals (17 percent) will receive payments that are between 90 percent and 100 percent of total costs (90 percent is the overall budget neutrality target for the initial years of the capital-PPS transition period). The remaining hospitals, (approximately 15, or 12 percent) will receive payments that are at least 85 percent of total costs (85 percent is the current level of hold-harmless payment for old capital, and it was the level of reimbursement under the reasonable cost system immediately prior to the introduction of prospective payment for capital). Although these hospitals would have received higher payments without the redetermination required by Public Law 103–66, the comparison of their payments to costs shows that overall payments to them are reasonable.

Hospitals that switch from fully prospective to receiving hold-harmless payments will receive average payments per discharge 4.6 percent greater than they would have received as fully prospective hospitals in the absence of Public Law 103–66. This is because they will receive the benefit of hold-harmless payments per discharge for old capital (an average of $476.40) greater than the hospital-specific rate payments per discharge they would have received as fully prospective hospitals (an average of $434.96), as well as larger Federal rate payments per discharge, due to an increase of the Federal rate portion of their payments from 30 percent (the FY 1994 blend percentage under the fully prospective methododology) to 35.2 percent (their average ratio of new to total Medicare capital), which more than offsets the 3.3 percent decline in Federal rate payments due to the reduction to the standard Federal rate.

Hospitals that remain 100% Federal will receive average payments per discharge 3.3 percent lower than they would have received in the absence of Public Law 103–66. The 3.3 percent decrease reflects the difference between the final FY 1994 Federal rate and our estimate of what the FY 1994 Federal rate would have been in the absence of the Public Law 103–66. The difference is due to the 7.4 percent reduction to the standard Federal rate, partially offset by a budget neutrality adjustment that is 4.33 percent higher than it would have been without the reduction to the base rate. Although these hospitals experience a decrease in average payments per discharge, they still receive 100% Federal rate payments in FY 1994 because 100% percent Federal rate payments are more advantageous for them than hold-harmless payments.

Hospitals that switch from 100% Federal rate payments to hold-harmless will receive average payments per discharge 1.9 percent lower than they would have received in the absence of Public Law 103–66. However, this reduction in average payments per discharge is less than the reduction they would have experienced if they had continued to receive payments based on 100% of the Federal rate (−1.9 percent compared to −3.3 percent). Finally, hold-harmless hospitals receive average payments per discharge 0.4 percent less than they would have received in the absence of Public Law 103–66. This is the result of the 3.3 percent decrease in the Federal rate payment, which constitutes an average of 22.6 percent of the payment for hospitals in this category.

We are making no changes in our exceptions policies in FY 1994. As a result, the minimum payment levels are still:

- 90 percent for sole community hospitals;
- 80 percent for urban hospitals with 100 or more beds and a disproportionate share patient percentage of 20.2 percent or more; or,
- 70 percent for all other hospitals.

We estimate that exceptions payments will increase from 0.5 percent of payments to 3.5 percent of payments in FY 1994. The projected distribution of the payments is shown in the table below:

ESTIMATED FISCAL YEAR 1994 EXCEPTIONS PAYMENTS

Type of hospital	No. of hospitals	Percent of exceptions of payments
Low Capital Cost	279	78
High Capital Cost	118	22
Total	397	100

C. Cross-Sectional Comparison of Capital Prospective Payment Methodologies

Table VI presents a cross-sectional summary of hospital groupings by capital prospective payment methodology. This distribution is generated by our actuarial model.

TABLE VI.—DISTRIBUTION BY METHOD OF PAYMENT (HOLD-HARMLESS/FULLY PROSPECTIVE) OF HOSPITALS RECEIVING CAPITAL PAYMENTS

	(1) Total No. of hospitals	(2) Hold-harmless		(3)
		Percentage paid hold-harmless (A)	Percentate paid fully federal (B)	Percentage paid fully prospective rate
By Geographic Location				
All hospitals	5,269	28.4	10.4	61.2
Large urban areas (populations over 1 million)	1,621	32.9	13.6	53.3
Other urban areas (populations of 1 million of fewer)	1,331	34.0	12.9	53.0
Rural areas	2,317	22.1	6.7	71.1
Urban hospitals	2,952	33.4	13.3	53.2
0-99 beds	725	31.1	9.5	59.3
100-199 beds	897	41.3	12.5	46.0
200-299 beds	610	35.2	14.9	49.8
300-499 beds	529	25.8	16.0	58.0
500 or more beds	191	19.8	18.8	61.2
Rural hospitals	2,317	22.1	6.7	71.1
0-49 beds	1,176	15.9	4.8	79.1
50-99 beds	707	26.3	7.4	66.1
100-149 beds	222	34.2	9.4	56.3
150-199 beds	106	25.4	10.3	64.1
200 or more beds	106	33.9	13.2	52.8
By Region				
Urban by Region	2,952	33.4	13.3	53.2
New England	172	18.0	9.3	72.6
Middle Atlantic	447	21.2	17.6	61.0
South Atlantic	450	44.4	13.5	42.0
East North Central	496	22.7	12.9	64.3
East South Central	170	45.2	11.1	43.5
West North Central	186	34.9	12.9	52.1
West South Central	373	54.6	16.6	28.6
Mountain	119	43.6	15.1	41.1
Pacific	491	28.1	9.5	62.3
Puerto Rico	48	25.0	8.3	66.6
Rural by Region	2,317	22.1	6.7	71.1
New England	53	15.0	3.7	81.1
Middle Atlantic	85	17.6	8.2	74.1
South Atlantic	300	26.0	8.6	65.3
East North Central	313	18.2	5.4	76.3
East South Central	288	30.9	6.9	62.1
West North Central	542	16.0	5.5	78.4
West South Central	359	26.1	8.9	64.9
Mountain	227	23.7	5.7	70.4
Pacific	145	21.3	6.2	72.4
By Payment Classification				
All hospitals	5,269	28.4	10.4	61.2
Large urban areas (populations over 1 million)	1,801	32.9	13.6	53.4
Other urban areas (populations of 1 million of fewer)	1,408	33.0	11.8	55.1
Rural areas	2,060	21.4	6.6	71.8
Teaching Status:				
Non-teaching	4,228	29.5	9.3	61.0
Fewer than 100 Residents	821	26.0	14.3	59.5
100 or more Residents	220	15.9	16.3	67.7
Disproportionate share hospitals (DSH):				
Non-DSH	3,455	26.9	9.1	63.9
Urban DSH:				
100 or more beds	1,301	33.2	14.9	51.8
Less than 100 beds	135	25.9	10.3	63.7
Rural DSH:				
Sole Community (SCH)	112	19.6	5.3	75.0
Referral Center (RRC)	48	29.1	18.7	52.0
Other Rural:				
100 or more beds	60	40.0	1.6	58.3
Less than 100 beds	158	25.9	6.3	67.7
Urban teaching and DSH:				
Both teaching and DSH	605	22.6	17.3	60.0
Teaching and no DSH	386	24.8	11.6	63.4
No teaching and DSH	831	39.7	12.5	47.7
No teaching and no DSH	1,387	35.6	11.4	52.8

TABLE VI.—DISTRIBUTION BY METHOD OF PAYMENT (HOLD-HARMLESS/FULLY PROSPECTIVE) OF HOSPITALS RECEIVING CAPITAL PAYMENTS—Continued

	(1) Total No. of hospitals	(2) Hold-harmless		(3)
		Percentage paid hold-harmless (A)	Percentate paid fully federal (B)	Percentage paid fully prospective rate
Rural Hospital Types:				
Non special status hospitals	838	19.2	7.2	73.5
RRC	156	32.0	10.8	57.0
SCH	558	25.2	5.7	68.9
Medicare-dependent hospitals (MDH)	461	15.8	4.9	79.1
SCH or MDH	1,066	21.6	5.5	72.7
Type of Ownership:				
Voluntary	3,035	27.1	11.3	61.5
Proprietary	770	54.8	12.7	32.4
Government	1,464	17.3	7.3	75.2
Medicare Utilization as a Percent of Inpatient Days:				
0–25	302	28.1	7.2	64.5
25–50	1,612	32.0	11.4	56.5
50–65	2,301	28.3	10.6	61.0
Over 65	1,010	23.7	9.0	67.2

As we explain in appendix B, we were not able to determine a hospital-specific rate for 33 of the 5,302 hospitals in our data base. Consequently, the payment methodology distribution is based on 5,269 hospitals. These data should be fully representative of the payment methodologies that will be applicable to hospitals.

The cross-sectional distribution of hospital by payment methodology is provided by: (1) Geographic location, (2) region, and (3) payment classification. This provides an indication of what percentage of hospitals within a particular hospital grouping will be paid under the fully prospective payment methodology and under the hold-harmless methodology.

Table VI indicates that 61.2 percent of hospitals are paid under the fully prospective payment methodology. (This does not include low cost hospitals that, following a hospital-specific rate determination, are now paid under the hold-harmless payment methodology.) As expected, a relatively higher percentage of rural and governmental hospitals (71.1 percent and 75.2 percent, respectively), are being paid on the fully prospective methodology. This is a reflection of their lower than average capital costs per case. In contrast, only 32.4 percent of proprietary hospitals are being paid under the fully prospective methodology. As we noted in the August 30, 1991 final rule (56 FR 43430), we found that 62.7 percent of proprietary hospitals have a capital cost per case above the national average cost per case.

D. Cross-Sectional Analysis of Changes in Aggregate Payments

We used our actuarial model to estimate the potential impact of our proposed changes for FY 1994 on total capital payments per case using a universe of 5,269 hospitals. The individual hospital payment parameters are taken from the best available data, including: The June 30, 1992 and June 30, 1993 updates to the Provider-Specific file, cost report data, and audit information supplied by intermediaries. Table VI presents a comparison of payments per discharge for FY 1993 and FY 1994. It also presents the portion of total percentage change in payments that can be attributed to Federal rate changes alone. Federal rate changes for FY 1994 include the 9.33 percent decrease in the Federal rate, a 2.0 percent increase in case mix, changes in the adjustments to the Federal rate (for example, the effect of the new hospital wage index and reclassifications by the Medicare Geographic Classification Review Board on the geographic adjustment factor.) The residual increase over the change attributable to the Federal rate changes can be attributed to the effects of transition changes, which include: the change from 20 percent to 30 percent in the portion of the Federal rate for fully prospective hospitals, the hospital-specific rate update, changes in the proportion of new to total capital for hold-harmless hospitals, changes in old capital (for example, obligated capital put in use), hospital-specific rate redeterminations, and exceptions. The comparisons are provided by: (1) Geographic location and (2) payment classification and payment region.

To highlight the effects of the 7.4 percent reduction to the standard Federal rate required under Public Law 103–66, we have added columns showing what payments would have been for each class of hospital without the reduction, and the percentage change due only to effects of the reduction (including the special redeterminations of payment methodology required by Public Law 103–66). The fifth column shows the change in payments from FY 1993 to FY 1994 (the fourth column compared to the second column). The sixth column shows the change in payments due to the effects of Public Law 103–66 (the fourth column compared to the third column). The seventh column shows the portion of the change in the fifth column attributable to Federal rate changes alone (i.e., isolating the Federal rate changes in the comparison of the fourth column to the second column). Thus, the changes shown in the sixth and seventh columns are already included in the total change shown in the fifth column.

The simulation results show that, on average, payments per case can be expected to increase 3.0 percent in FY 1994. The results show that the effect of the Federal rate changes alone is to decrease payments by 2.0 percent. However, the decrease attributable to the Federal rate changes is more than offset by a 4.9 percent increase attributable to the effects of transition changes and the increase in the budget neutrality target.

By geographic location, urban hospitals can be expected to experience

a 3.1 percent increase. Rural hospitals are expected to experience a 2.2 percent increase. Urban hospitals will lose 1.9 percent from the Federal rate changes. Rural hospitals will lose 2.7 percent from the Federal rate changes. Urban hospitals will gain 5.0 percent from the effects of transition changes. Rural hospitals will gain 4.9 percent from the effects of transition changes. The Public Law 103–66 changes produce no effect for urban hospitals as a class. The 2.2 percent overall increase for rural hospitals includes a 0.2 percent increase from the effects of Public Law 103–66, probably as a result of higher hospital-specific rate payments.

By region, urban hospitals of the New England region have the highest rate of increase (12.3 percent, of which –2.3 percent is due to Federal rate changes and 14.6 percent to the effects of transition changes). The increase for these hospitals includes 0.1 percent from the effects of Public Law 103–66. Urban hospitals of the West North Central region fare the worst: these hospitals will experience a 0.8 percent decline in payments, of which –2.1 percent is attributable to Federal rate changes and 1.3 percent to the effects of transition changes. These hospitals would have lost 1.0 percent overall without a 0.2 percent increase from the effects of Public Law 103–66.

By type of ownership, government hospitals are projected to have the highest rate of increase (4.2 percent, of which –2.4 percent is due to Federal rate changes and 6.6 percent to the effects of transition changes). No part of their increase is due to the Public Law 103–66 changes. Payments to proprietary hospitals will increase 2.7 percent (–1.6 percent is due to the Federal rate changes and 4.3 percent to the effects of transition changes). These hospitals would have experienced a 3.2 percent increase except for a –0.5 percent change due to the effects of Public Law 103–66. Payments to voluntary hospitals will increase 2.8 percent (–2.1 percent is due to Federal rate changes and 4.9 percent to the effects of transition changes). Their increase would have been 2.9 percent except for a 0.1 percent decrease due to the effects of Public Law 103–66.

Section 1886(d)(10) of the Act established the Medicare Geographic Classification Review Board (MGCRB). Hospitals may apply for reclassification for the purpose of obtaining another area's wage index value, standardized payment amount, or both. Although there is only a single national Federal capital rate, a hospital's geographic classification for purposes of the operating standardized amount does affect a hospital's capital payments as a result of the large urban add-on and the disproportionate share adjustment for urban hospitals with 100 or more beds. Reclassification for wage index purposes affects the geographic adjustment factor since that factor is constructed from the hospital wage index.

To present the effects of geographic reclassification for FY 1994 compared to FY 1993, we show the average payment percentage increase for hospitals reclassified in each fiscal year and in total. For FY 1994 reclassifications, we are indicating those hospitals reclassified for standardized amount purposes only, for wage index purposes only, and for both factors. The reclassified groups are compared to all other nonreclassified hospitals. These categories are further identified by urban and rural designation.

Hospitals reclassified for FY 1994 as a whole are projected to experience a 3.6 percent increase in payments (–1.6 percent attributable to Federal rate changes and 5.2 percent attributable to the effects of transition changes). Nonreclassified hospitals will gain 2.9 percent (–2.1 percent from the Federal rate changes and 5.0 percent from transition effects). Urban reclassified hospitals will experience the greatest gains (4.5 percent, of which –1.3 percent is attributable to the Federal rate changes and 5.8 percent to transition changes).

The changes due to Public Law 103–66 are uniformly small. The greatest gain is only 0.9 percent (for rural hospitals of the Pacific region, who will probably gain from payment methodology redeterminations). The greatest decrease is only –0.9 percent (hospitals reclassified only during FY 1994). Most increases and decreases due to Public Law 103–66 are much smaller.

TABLE VII.—COMPARISON OF TOTAL PAYMENTS PER CASE (FY 1993 PAYMENTS COMPARED TO FY 1994 PAYMENTS)

	Number of hospitals	Average FY 1993 payments/case	Average FY 1994 payments/case before OBRA	Average FY 1994 payments/case after OBRA	All changes	Change due to OBRA	Portion attributable to Federal rate change
By Geographic Location:							
All hospitals	5,269	615	633	633	3.0	0.0	–2.0
Large urban areas (populations over 1 million)	1,621	697	716	716	2.7	0.0	–1.8
Other urban areas (populations of 1 million or fewer)	1,331	621	645	644	3.6	–0.1	–2.1
Rural areas	2,317	411	419	420	2.2	0.2	–2.7
Urban hospitals	2,952	664	685	685	3.1	0.0	–1.9
0–99 beds	725	500	515	515	3.1	0.0	–1.5
100–199 beds	897	620	645	643	3.5	–0.2	–1.8
200–299 beds	610	637	649	650	2.0	0.1	–2.0
300–499 beds	529	670	700	701	4.4	0.0	–2.0
500 or more beds	191	793	809	808	1.8	–0.1	–1.9
Rural hospitals	2,317	411	419	420	2.2	0.2	–2.7
0–49 beds	1,176	299	309	311	3.7	0.6	–2.9
50–99 beds	707	379	390	391	3.3	0.3	–2.7
100–149 beds	222	449	456	457	1.6	0.1	–2.7
150–199 beds	106	430	449	449	4.3	0.0	–2.8
200 or more beds	106	519	514	516	–0.6	0.2	–2.5
By Region:							
Urban by Region	2,952	664	685	685	3.1	0.0	–1.9

TABLE VII.—COMPARISON OF TOTAL PAYMENTS PER CASE (FY 1993 PAYMENTS COMPARED TO FY 1994 PAYMENTS)—Continued

	Number of hospitals	Average FY 1993 payments/case	Average FY 1994 payments/case before OBRA	Average FY 1994 payments/case after OBRA	All changes	Change due to OBRA	Portion attributable to Federal rate change
New England	172	602	676	677	12.3	0.1	−2.3
Middle Atlantic	447	678	697	696	2.5	−0.2	−1.8
South Atlantic	450	673	695	692	2.7	−0.4	−1.8
East North Central	496	610	623	626	2.6	0.5	−2.4
East South Central	170	618	673	673	8.9	0.0	−2.0
West North Central	186	668	661	662	−0.8	0.2	−2.1
West South Central	373	751	756	751	0.0	−0.6	−1.6
Mountain	119	688	693	693	0.6	0.0	−2.3
Pacific	491	718	743	745	3.7	0.2	−1.8
Puerto Rico	48	284	285	286	0.4	0.2	−0.7
Rural by Region	2,317	411	419	420	2.2	0.2	−2.7
New England	53	438	465	463	5.6	−0.4	−1.1
Middle Atlantic	85	418	419	419	0.3	0.0	−2.6
South Atlantic	300	441	452	454	2.8	0.5	−2.5
East North Central	313	400	410	413	3.2	0.6	−3.3
East South Central	288	392	395	394	0.7	−0.1	−2.6
West North Central	542	370	385	385	4.0	0.0	−2.5
West South Central	359	405	403	403	−0.5	0.0	−2.9
Mountain	227	472	489	490	3.7	0.1	−2.4
Pacific	145	440	444	448	1.7	0.9	−3.4
By Payment Classification:							
All hospitals	5,269	615	633	633	2.9	0.0	−2.0
Large urban areas (populations over 1 million)	1,801	689	709	709	2.8	0.0	−1.8
Other urban areas (populations of 1 million or fewer)	1,408	606	628	627	3.4	0.0	−2.2
Rural areas	2,060	404	412	413	2.2	0.2	−2.8
Teaching Status:							
Non-teaching	4,228	551	563	563	2.1	0.0	−2.0
Fewer than 100 Residents	821	645	670	671	4.0	0.0	−2.2
100 or more Residents	220	851	885	883	3.7	−0.1	−1.8
Disproportionate share hospitals (DSH):							
Non-DSH	3,455	572	580	580	1.4	0.0	−2.1
Urban DSH:							
100 or more beds	1,301	693	728	727	4.8	−0.1	−2.0
Less than 100 beds	135	448	448	449	0.4	0.2	−1.6
Rural DSH:							
Sole Community (SCH)	112	367	370	372	1.5	0.5	−1.9
Referral Center (RRC)	48	507	514	514	1.3	0.0	−2.6
Other Rural:							
100 or more beds	60	400	400	403	0.8	0.7	−1.9
Less than 100 beds	158	324	330	330	1.8	−0.1	−2.8
Urban teaching and DSH:							
Both teaching and DSH	605	746	785	784	5.1	−0.1	−2.1
Teaching and no DSH	386	658	671	673	2.1	0.3	−2.0
No teaching and DSH	831	617	643	643	4.1	0.0	−1.8
No teaching and no DSH	1,387	600	604	603	0.6	−0.1	−1.9
Rural Hospital Types:							
Non special status hospitals	838	351	356	358	1.9	0.4	−2.9
RRC	156	489	489	490	0.0	0.0	−3.1
SCH	558	400	414	416	3.8	0.2	−2.4
Medicare-dependent hospitals (MDH)	461	308	324	326	5.7	0.5	−3.1
SCH or MDH	1,066	395	411	412	4.3	0.3	−2.5
Hospitals Reclassified by the Medicare Geographic Classification Review Board:							
Reclassification Status During FY93 and FY94:.							
Reclassified During Both FY93 and FY94	551	581	603	603	3.6	0.0	−1.8
Reclassified During FY94 Only	114	632	661	654	3.4	−0.9	−0.5
Reclassified During FY93 Only	651	498	506	507	1.8	0.1	−3.4
FY94 Reclassifications:							
All Reclassified Hospitals	669	588	611	610	3.6	−0.2	−1.6
All Nonreclassified Hospitals	4,573	619	637	637	2.9	0.0	−2.1
All Urban Reclassified Hospitals	230	691	725	722	4.5	−0.4	−1.3
Urban Nonreclassified Hospitals	2,722	661	681	681	2.9	0.0	−2.0
All Reclassified Rural Hospitals	439	470	480	480	2.2	0.1	−2.0
Rural Nonreclassified Hospitals	1,851	384	392	393	2.3	0.3	−3.1
Other Reclassified Hospitals (Section 1886(D)(8)(B))	27	445	432	433	−2.7	0.0	−1.8

TABLE VII.—COMPARISON OF TOTAL PAYMENTS PER CASE (FY 1993 PAYMENTS COMPARED TO FY 1994 PAYMENTS)—Continued

	Number of hospitals	Average FY 1993 payments/case	Average FY 1994 payments/case before OBRA	Average FY 1994 payments/case after OBRA	All changes	Change due to OBRA	Portion attributable to Federal rate change
Type of Ownership:							
Voluntary	3,035	623	640	640	2.8	0.1	−2.1
Proprietary	770	696	719	715	2.7	−0.5	−1.6
Government	1,464	505	527	527	4.2	0.0	−2.4
Medicare Utilization as a Percent of Inpatient Days:							
0–25	302	639	668	669	4.7	0.2	−1.9
25–50	1,612	694	717	716	3.1	−0.1	−2.0
50–65	2,301	576	590	591	2.5	0.1	−2.1
Over 65	1,010	529	549	550	3.8	0.0	−2.1

E. Cross-Sectional Analysis of Changes in the Federal Rate.

The analysis in Table VIII examines the impact of following changes in the Federal rate set forth in section III of the addendum to this final rule—

- The effects of the annual reclassification of DRGs and the recalibration of the DRG weights required by section 1886(d)(4)(C) of the Act (column 4).
- The effects of changes in the geographic adjustment factor (column 5).
- The effects of all changes, including those separately displayed in columns 4 and 5.

To estimate the impact of DRG changes and changes due to the geographic adjustment factor, we simulated payments based on 100 percent of the Federal rate. Thus, the simulation in Table VIII is not representative of changes in capital prospective payment system payments from FY 1993 to FY 1994. Rather, it reflects the percentage change in payments for hospitals receiving 100 percent of the Federal rate. For other hospitals, it reflects the percentage change in the Federal rate portion of the payments, holding the proportion of the Federal rate payment constant. Unlike the Federal rate payment change in Table VII, the analysis in Table VIII does not include any increase in Federal rate payments attributable to anticipated increases in the case-mix index.

To present the effects of the separate policy changes displayed in columns 4 and 5, we added each change incrementally, so that the percentages in each column represent the differences in payment relative to the previous column. The baseline for comparison is an FY 1994 system absent any of the changes above. For example, column 4 displays the impact of DRG reclassifications and recalibration relative to estimated FY 1994 payments absent these changes. Similarly, column 5 shows the impact of the changes in the geographic adjustment factor over and above the changes resulting from DRG reclassifications and recalibration. The changes in the geographic adjustment factor result from the combined effect on the hospital wage index of the new MSAs, updated wage data, and geographic reclassifications. Column 6 displays the combined changes from the previous columns, as well as the effects of other factors affecting Federal rate payments. The other factors include: the change in the standard Federal rate, the effect of the new MSAs and geographic reclassifications on large urban status, and a 0.7 percent increase in outlier payments. Column 6 compares estimated FY 1994 Federal rate payments to estimated FY 1993 Federal rate payments. Thus, only the last column reflects the effects of all quantifiable policy changes on simulated FY 1994 Federal rate payments.

The table shows that Federal rate payments can be expected to decrease 8.5 percent overall prior to consideration of any increase in the case-mix index. This decrease is due to the 9.3 percent decrease in the Federal rate, which is partially offset by the 0.7 percent increase in outlier payments and the 0.1 percent increase due to large urban changes.

The table also shows the distributional effects of the changes in Federal rate payments from DRG reclassifications and recalibration, and from changes in the geographic adjustment factor due to the new hospital wage index and geographic reclassifications. The DRG changes are expected to produce only minimal effects on the distribution of Federal rate payments and parallel the effects of the same changes on operating payments. The highest gain from DRG reclassifications and recalibration is projected at 0.4 percent (for urban hospitals in Puerto Rico), while the largest loss is projected at −0.3 percent (for hospitals changing MSA from urban to rural as a result of the 1990 census).

The geographic adjustment factor changes are in relation to the FY 1993 geographic adjustment factor based on FY 1993 geographic reclassifications. The 1.0 percent increase in Federal rate payments to large urban hospitals is largely attributable to the new wage data; the decreases in payments to other urban and rural hospitals reflect the combined effect of the new wage data and fewer geographic reclassifications for purposes of the hospital wage index. Hospitals that are reclassified for FY 1994 only are expected to experience a 4.1 percent increase in payments from the effects of geographic reclassification. Hospitals reclassified for FY 1993 only will experience an estimated 3.2 percent decrease in payments.

For FY 1994 reclassifications, reclassified hospitals as a group are expected to experience a 0.7 percent increase in payments from the effects of changes in the geographic adjustment factor. Nonreclassified hospitals as a group will experience an estimated decrease of 0.1 percent in payments from the effects of reclassifications.

Because of the impact on rural hospitals of the changes in the geographic adjustment factor, urban hospitals will experience a lower (−8.1 percent) overall decrease in Federal rate payments than rural hospitals (−11.3 percent). (However, only 6.7 percent of rural hospitals are paid by the 100% Federal rate formula represented in this table.) By region, rural hospitals in the

Mountain region will experience the greatest decrease (−12.6 percent), while rural hospitals in Puerto Rico will experience a small increase (1.6 percent, and the only increase of any category). Hospitals changing from urban MSAs to rural areas will experience the greatest decrease (−18.3 percent).

TABLE VIII.—HEALTH CARE FINANCING ADMINISTRATION 1994 FINAL CAPITAL PAYMENT SIMULATION BY GEOGRAPHIC LOCATION

	(1)	(2)	(3)	(4)	(5)	(6)
	No. of hosps.	Payment per case FY 1993	Payment per case FY 1994	Recalibration change	Reclassification change	All changes
All Hospitals	5,302	653	598	0.0	0.0	−8.5
Large Urban Areas (Populations over 1 Million)	1,636	746	689	0.1	1.0	−7.6
Other Urban Areas (Populations of 1 Million or Fewer)	1,344	644	587	0.0	−0.7	−8.8
Rural Areas	2,322	453	402	−0.1	−2.3	−11.3
Hospitals Changing MSA due to 1990 Census:						
Rural to Urban	108	513	495	0.0	7.0	−3.5
Urban to Rural	13	472	386	−0.3	−10.1	−18.3
Other Urban to Large Urban	143	672	633	0.1	0.6	−5.8
Urban Hospitals	2,980	702	645	0.1	0.3	−8.1
0–99 Beds	750	506	466	−0.1	0.9	−8.0
100–199 Beds	899	610	561	0.0	0.4	−8.2
200–299 Beds	611	667	612	0.1	0.1	−8.3
300–499 Beds	529	734	674	0.1	0.2	−8.2
500 or More Beds	191	862	796	0.1	0.7	−7.8
Rural Hospitals	2,322	453	402	−0.1	−2.3	−11.3
0–49 Beds	1,180	379	335	−0.2	−2.2	−11.7
50–99 Beds	708	423	375	−0.1	−2.3	−11.4
100–149 Beds	222	471	420	0.0	−1.4	−10.7
150–199 Beds	106	484	425	0.0	−3.1	−12.1
200 or More Beds	106	537	477	0.0	−2.6	−11.2
Urban by Region:						
New England	172	726	668	0.0	0.5	−8.1
Middle Atlantic	447	749	700	0.2	2.2	−6.6
South Atlantic	453	674	621	0.0	0.5	−7.9
East North Central	498	685	620	0.1	−1.2	−9.5
East South Central	170	620	571	0.0	−0.4	−7.9
West North Central	187	698	636	0.0	−0.4	−9.0
West South Central	380	659	605	0.0	−0.4	−8.2
Mountain	121	707	646	0.0	−0.1	−8.6
Pacific	502	790	725	0.0	0.5	−8.3
Puerto Rico	50	288	269	0.4	2.9	−6.4
Rural by Region:						
New England	53	523	481	−0.1	1.3	−8.0
Middle Atlantic	85	495	447	0.0	−0.3	−9.7
South Atlantic	302	468	416	0.0	−2.4	−11.1
East North Central	313	461	404	−0.1	−3.2	−12.3
East South Central	289	416	367	−0.2	−2.5	−11.7
West North Central	542	426	380	−0.1	−1.5	−10.9
West South Central	361	423	373	−0.1	−2.9	−12.0
Mountain	227	476	416	−0.1	−4.1	−12.6
Pacific	145	540	477	0.0	−2.6	−11.6
Puerto Rico	5	216	219	−0.1	12.9	1.6
(By Payment Classification):						
All Hospitals	5,302	653	598	0.0	0.0	−8.5
Large Urban Areas (Populations over 1 Million)	1,816	736	680	0.1	0.8	−7.6
Other Urban Areas (Populations of 1 Million or Fewer)	1,421	631	573	0.0	−0.6	−9.1
Rural Areas	2,065	449	396	−0.1	−2.6	−11.7
Teaching Status:						
Non-Teaching	4,261	563	513	0.0	−0.2	−8.9
Fewer than 100 Residents	821	705	644	0.1	−0.3	−8.6
100 or More Residents	220	968	896	0.1	1.0	−7.5
Disproportionate Share Hospitals (DSH):						
Rural Non-DSH	2,065	449	396	−0.1	−2.6	−11.7
Urban Non-DSH	949	496	454	−0.1	0.3	−8.6
Urban DSH (100 Beds or More)	2,288	709	652	0.1	0.3	−8.1
Urban Teaching and DSH:						
Both Teaching and DSH	935	788	723	0.1	0.3	−8.1
Teaching and no DSH	56	581	534	−0.1	0.8	−8.1
No Teaching and DSH	1,353	626	575	0.0	0.4	−8.1
No Teaching and no DSH	893	492	449	−0.1	0.2	−8.6
Rural Hospital Types:						

TABLE VIII.—HEALTH CARE FINANCING ADMINISTRATION 1994 FINAL CAPITAL PAYMENT SIMULATION BY GEOGRAPHIC LOCATION—Continued

	(1)	(2)	(3)	(4)	(5)	(6)
	No. of hosps.	Payment per case FY 1993	Payment per case FY 1994	Recalibration change	Reclassification change	All changes
Nonspecial Status Hospitals	843	414	366	−0.1	−2.2	−11.5
RRC	156	526	463	0.0	−3.3	−11.9
SCH	558	426	378	−0.1	−2.2	−11.3
MDH	461	379	334	−0.2	−2.1	−11.7
SCH and RRC	47	519	456	0.0	−3.5	−12.2
SCH and MDH	1,066	429	379	−0.1	−2.5	−11.6
Type of Ownership:						
Voluntary	3,059	671	614	0.1	0.0	−8.5
Proprietary	776	619	571	0.0	0.5	−7.8
Government	1,467	592	537	0.0	−0.3	−9.2
Medicare Utilization as a Percent of Inpatient Days						
0—25	309	763	700	0.0	0.8	−8.2
25—50	1,614	735	674	0.1	0.3	−8.2
50—65	2,301	612	559	0.0	−0.3	−8.8
Over 65	1,012	546	496	0.0	−0.4	−9.2
Unknown	66	793	743	0.2	3.2	−6.3
(By Payment Classification):						
Hospitals Reclassified by the Medicare Geographic Review Board:						
Reclassification Status During FY93 and FY94:						
Reclassified During Both FY93 and FY94	551	616	567	0.0	0.1	−8.0
Reclassified During FY94 Only	114	606	581	0.1	4.1	−4.0
Reclassified During FY93 Only	672	579	511	0.0	−3.2	−11.6
FY 94 Reclassifications:						
All Reclassified Hosp	669	614	569	0.0	0.7	−7.4
All Nonreclassified Hospitals	4,606	660	602	0.0	−0.1	−8.7
Urban Reclassified Hospitals	230	714	669	0.1	1.1	−6.3
Urban Nonreclassified Hospitals	2,750	701	643	0.1	0.3	−8.3
Rural Reclassified Hospitals	439	499	452	−0.1	−0.1	−9.3
Rural Nonreclassified Hospitals	1,856	432	379	−0.1	−3.5	−12.4
Other Reclassified:						
Hospitals (Section 1886(D)(8)(B))	27	506	457	−0.1	0.6	−9.7

VIII. Impact of Changes to Graduate Medical Education Payment Provisions

Section 1886(h) of the Social Security Act requires the calculation of hospital-specific approved per resident graduate medical education amounts for cost reporting periods beginning on or after July 1, 1985, based on the hospital's allowable costs for its cost reporting period beginning during Federal fiscal year 1984. Section 1886(h)(2)(D) of the Act generally provides for updating the approved per resident amount for subsequent years by the estimated percentage change in the Consumer Price Index.

Section 13563(a)(1) of the Omnibus Budget Reconciliation Act of 1993 (OBRA 93) requires that for cost reporting periods beginning in Federal fiscal years 1994 and 1995 the approved per resident amount for a hospital will be updated for primary care residents and obstetrics and gynecology residents only. For all other residents the per resident amount for cost reports beginning in Federal fiscal years 1994 and 1995 will not be updated for inflation. The effect of this change for teaching hospitals with both primary care and non-primary care residencies is to have two different per resident amounts for those cost reporting periods. One per resident amount which reflects the prior period amount with the Consumer Price Index (CPI–U) adjustment and one without the adjustment. OBRA 93 limited, by definition, primary care resident to mean a resident enrolled in an approved medical residency training program in family medicine, general internal medicine, general pediatrics, preventive medicine, geriatric medicine or osteopathic general practice.

This final rule with comment period implements the statutory requirement at section 13563(a)(1) of the Omnibus Budget Reconciliation Act of 1993 to control the growth in payments to hospitals with currently approved GME programs by limiting the application of the CPI–U adjustment to the per resident payment amount for either primary care residents or obstetrics and gynecology residents. The following table presents the estimated savings expected to be achieved from implementing this statutory requirement, relative to what would have been paid for GME had prior period payments been adjusted by CPI–U for all residents.

Medicare Program Savings [1]

[In fiscal years and in millions of dollars]

1994	1995	1996	1997	1998
10	30	60	60	70

[1] Figures are rounded to the nearest $10 million.

Although this final rule with comment period implements provisions to reduce Medicare payments for GME, it is difficult to predict the effects these reductions will have on specific GME programs. We know that patient revenues generally comprise the major portion of GME funding, but the proportion of funding varies depending on a hospital's affiliation and the specialty programs that the hospital operates. State-run hospitals, for example, depend less on patient

revenues than do unaffiliated or church-affiliated hospitals. Also, oncology GME programs tend to receive more funding from sources other than patient revenues (e.g. grants and gifts), than GME programs in family practice.

This final rule with comment period also implements the statutory requirement at section 13563(b)(1)(B) of the Omnibus Budget Reconciliation Act of 1993 which extended the exception currently applied to geriatric residents at section 1886(h)(5)(F), to preventive medicine residents. Effective August 10, 1993, a period of up to two years during which an individual is in a preventive medicine residency will not be counted against any limitation on the initial residency period.

Based on the data that is currently available, we are unable to estimate the costs associated with the implementation of this change. However, we believe that the impact will be negligible since this provision only applies to 119 interns in preventive medicine programs where participation in the program has resulted in the intern's exceeding the initial residency period.

Appendix B—Technical Appendix on the Capital Acquisition Model and Budget Neutrality Adjustment

Section 1886(g)(1)(A) of the Act requires that for FY 1992 through FY 1995 aggregate prospective payments for operating costs under section 1886(d) and prospective payments for capital costs under section 1886(g) of the Act be reduced each year in a manner that results in a 10 percent reduction of the amount that would have been payable on a reasonable cost basis for capital-related costs in that year. Under § 412.352, the 10 percent reduction is generated entirely from the capital prospective payments. A budget neutrality adjustment factor is applied to the Federal rate and hospital-specific rate so that total capital payments for FY 1992 through FY 1995 equal 90 percent of Medicare inpatient capital costs in each year.

To calculate the budget neutrality adjustment, we must be able to project the rate at which old capital will be depreciated and written off and at which new capital will be acquired and depreciated. (Old capital costs are depreciation, lease, interest expenses, and other capital-related costs defined in § 412.302 that are in use or obligated on or before December 31, 1990.)

In developing the FY 1992 prospective payment rates, there were limited capital data available that could be used to project payments under the capital prospective payment system and develop the budget neutrality adjustment factor. Consequently, we developed a capital acquisition model that relied on Monte Carlo random simulation techniques to project capital costs for 6000 hypothetical hospitals. This model is described in detail in the August 30, 1991 final rule (56 FR 43517–43522). The model will be referred to as the capital acquisition model in the following discussion.

Since publication of the August 30, 1991 final rule, capital data have become available that can be incorporated directly into the determination of budget neutrality. In the September 1, 1992 final rule (57 FR 40005–40008), we incorporated more recent data including the June 30, 1992 update of the Provider-Specific File that provides the data items needed by the PRICER program used by the intermediaries to determine interim capital payments to hospitals, cost reports for cost reporting periods beginning in FY 1989 (PPS–6) (that overlap the base year for determining the hospital-specific rate) and FY 1990 (PPS–7), and data reported by the intermediaries that includes the hospital-specific rate determinations that have been made through June 1992. We are using updates of these data to set the FY 1994 capital rates. The updated files include the Provider-Specific file as of June 30, 1992 and June 30, 1993 and cost reports for cost reporting periods beginning in FY 1991 (PPS–8) as well as the June 1993 update of the files for earlier cost reporting periods.

The available data sources directly supply, or can be used to calculate, the hospital-specific rate. For those hospitals with capital data in the Provider-Specific File, the payment methodology as well as the estimated FY 1992 and FY 1993 hold-harmless amounts and new capital ratios for hospitals paid under the hold-harmless payment methodology are also available.

The available data still lack certain items which are required for the determination of budget neutrality. These items are the hospital's new capital costs for each year, its old capital costs for each year, and the obligated capital amounts that will be put in use for patient care services and recognized as old capital each year.

For FY 1993, we implemented an integrated model that starts with the available data for existing hospitals and back-fills the missing items with results from the capital acquisition model that was used to develop the FY 1992 payment rates. We are continuing to use this integrated model. Since hospitals under alternative payment system waivers are currently excluded from the capital prospective payment system, we excluded these hospitals (hospitals in Maryland and hospitals in the Finger Lakes Area Hospital Corporation in New York) from our model.

We have not modified the parameters of the FY 1992 capital acquisition model; however, we analyzed several capital growth patterns generated by that model to backfill the elements for which actual data are not available. These patterns include the distribution of growth rates in old capital (exclusive of obligated capital), the new capital ratio (which includes obligated capital), and the ratio of obligated capital costs for assets being put in use for patient care to total capital costs. In all cases, the distributions from the model were fitted to the beta distribution. The beta distribution is a two parameter distribution with the range restricted from zero to one. The growth rate for old capital (which is exclusive of obligated capital) must be between zero and one since depreciation and interest on old capital cannot increase. The ratio of new capital to total capital and the ratio of obligated capital to total capital are necessarily between zero and one. Hence, the beta distribution is ideal for these purposes, especially since the two parameters provide a range of shapes.

With regard to the new capital ratio for years after FY 1992, the model fits the change in the ratio from one year to the next to the beta distribution. This is to prevent large swings in the new capital ratio over time. It is possible to have a decrease in the new capital ratio since some new capital may have a short life time compared to old capital. Therefore, we rescaled the range of the changes in the ratios since the beta distribution must have numbers between zero and one.

We first developed hospital-specific rates for FY 1992 and FY 1993. These rates were developed from both the June 1992 (for the 1992 rates) and June 1993 (for the 1993 rates) updates of the Provider-Specific file. These files contain the actual amounts used by the intermediaries with the PRICER program to compute interim capital prospective payments. We also used audit information provided by the intermediaries. Data from all of these files were used to determine consistent FY 1992 and FY 1993 hospital-specific rates. Many of the FY 1992 hospital-specific rates in the June 1992 update of the Provider-Specific file were preliminary determinations, and in many of these cases they were greater than the FY 1993 hospital-specific rates.

Our procedure was to use the audit data, when available, as the "best"

source of the hospital-specific rate, and then to ensure that the FY 1993 rate exceeded the FY 1992 rate by a factor of at least 1.0062 (which represents the increase in the hospital-specific rate from FY 1992 to FY 1993, established by the final rule of September 1, 1992). This methodology ensured that most hospitals would have a hospital-specific rate increase of 0.62 percent and that the remaining hospitals would have a larger increase. Because hospitals can request an upward redetermination of the hospital-specific rate, we expect that some hospitals would increase more than 0.62 percent.

After performing the above determination, some hospitals still had zeroes for the hospital-specific rates. For these hospitals, we used cost reports for reporting periods beginning in FY 1988 (PPS–5), FY 1989 (PPS–6), FY 1990 (PPS–7) and FY 1991 (PPS–8) to develop a hospital-specific rate. If the hospital-specific rate could be determined from more than one cost report, the cost report with a reporting period closest to the hospital-specific rate base year was chosen.

The following table summarizes the sources of the hospital-specific rates.

HOSPITAL-SPECIFIC RATE SOURCES BY NUMBER OF HOSPITALS

Data source	Number of hospitals
Provider-Specific File & Audit File	5,232
Provider-Specific File only	19
PPS–6 Cost Reports	11
PPS–7 Cost Reports	7
Total	5,269

(**Note:** We were not able to determine a hospital-specific rate for 33 of the 5,302 hospitals in the analysis data base. Consequently, we modeled capital budget neutrality using 5,269 hospitals.)

The model also develops the old capital amount for each hospital. For FY 1992 the model uses the hold-harmless payments per discharge from the June 1992 Provider-Specific File if available. If the actual hold-harmless amount is not available, the model develops an estimate from the hospital-specific rate. It computes an FY 1990 capital cost per discharge by dividing the FY 1992 hospital-specific rate by factors used to inflate base year capital cost per discharge to FY 1992 as set forth in the August 30, 1991 final rule (56 FR 43390). The model updates the base year capital per discharge to FY 1992 using a 2-year rate of increase (FY 1990 to FY 1992) in old capital that is randomly generated from the beta distribution described above. This old capital amount for FY 1992 excludes any obligated capital that has been put in use since the base year. Excluding obligated capital from the old capital growth factors produces a more stable growth sequence with lower variance. The development of the hospital's obligated capital costs is described below. Before we update the hospital's old capital costs in a given year, the model adds the obligated capital that is first depreciated in the current year to the old capital cost for that year. As a result, any obligated capital depreciation and interest expense projected by the model is incorporated into the hospital's old capital costs in subsequent years including FY 1993 and FY 1994.

For FY 1993 the model uses the hold-harmless payments per discharge from the June 1993 Provider-Specific file if available. If the actual hold-harmless amount is not available, the model develops an estimate by generating a one year rate of increase from the Beta distribution and applying this increase to the FY 1992 hold-harmless amount. Hold-harmless amounts for later years are developed in the same way. Amounts for obligated capital are developed as described above.

The model also develops the new capital ratio for each hospital. If available, the model uses the hospital's FY 1992 new capital ratio from the Provider-Specific File. If the actual new capital ratio is not available, the model generates the ratio from a beta distribution as described above. For purposes of fitting the new capital ratio to the beta distribution, the model treats obligated capital as new capital. The model restricts the new capital ratio to 90 percent in all cases. After fitting the FY 1992 new capital ratio, the year-to-year change in the new capital ratio is fit to the beta distribution. The new capital ratio combined with the old capital amount generates the total capital costs.

Finally, the model develops the obligated capital ratio for obligations first being depreciated in the year under analysis. It generates an obligated capital ratio using a beta distribution fitted to the results of the capital acquisition model (and obligated capital assumptions) as described above. This ratio is an offset to the new capital ratio. Consequently, the obligated capital ratio is restricted to the magnitude of the new capital ratio. The new capital ratio is reduced by the obligated capital ratio.

If a hospital has a hold-harmless payment amount available in the Hospital-Specific File, this amount includes the effect of obligated capital on its FY 1992 and FY 1993 old capital costs per discharge. Therefore, the model does not generate any additional FY 1992 or FY 1993 obligated capital for these hospitals. We generated obligated capital amounts for all hospitals for FY 1994 and later.

The model does not recompute the hospital's total capital costs for obligated capital. Instead, obligated capital costs are the product of the obligated capital ratio rate and total capital costs. The hospital's costs for new capital are the product of the revised new capital ratio times the hospital's total capital costs.

We computed the average total capital cost per discharge from the capital costs that were generated by the model and compared the results to total capital costs per discharge that we had projected independently of the model. We adjusted the component amounts of total capital costs (old capital, obligated capital, and new capital) proportionately so that the total capital costs per discharge generated by the model match the independently projected capital costs per discharge.

To summarize, the model integrates actual data with randomly generated amounts developed from the results of the capital acquisition model. For purposes of aggregate capital, we generated at most three numbers for each hospital each year. Only the old capital increase, new capital ratio, and obligated capital ratio are randomly generated.

Once each hospital's capital-related costs are generated, the model projects capital payments. We use the actual payment parameters (for example, the case-mix index and the geographic adjustment factor), that are applicable to the specific hospital.

To project capital payments, the model first assigns the applicable payment methodology (fully prospective or hold-harmless) to the hospital. If available, the model uses the payment methodology method indicated in the Provider-Specific File. Otherwise, the model determines the methodology by comparing the hospital's FY 1992 hospital-specific rate to the adjusted Federal rate applicable to the hospital. The model simulates Federal rate payments using the assigned payment parameters and hospital-specific estimated outlier payments. The case-mix index for a hospital is derived from the 1992 MEDPAR file using the FY 1994 DRGs and relative weights published in this final rule. The case-mix index is increased each year after FY 1992 consistent with the continuing trend in case-mix increase.

We have analyzed the case-mix increases for FY 1992 and FY 1993 using all admissions reported through July 1993. The measured case-mix increase for FY 1992 is 1.52 percent and 0.46 percent for FY 1993. After analyzing the effects of data completion for earlier years, we estimate that the case-mix increase will be approximately 1.6 percent and 1.3 percent for FY 1992 and FY 1993, respectively. We have observed that admission incidence has increased in both FY 1992 and FY 1993 which reduces the increases in case mix because most of the additional admissions are low severity cases, such as influenza admissions. We do not expect the admission incidence to continue to increase at the FY 1992 and FY 1993 rates, and consistent with lower admission incidence, we expect future case mix to increase at 2 percent as it has in the past. Consequently, the model increases the FY 1992 case mix by 1.3 percent for FY 1993, and by 2.0 percent for FY 1994 and later. (Since we are using FY 1992 cases for our analysis, the FY 1992 increase in case-mix has no effect on the FY 1994 Federal rate. It does affect the estimated update for the FY 1995 Federal rate displayed in the projection table in this appendix.)

Changes in geographic classification and corrections in the hospital wage data used to establish the hospital wage index affect the geographic adjustment factor. Changes in the DRG classification system and the relative weights affect the case-mix index.

Section 13501(a)(3) of Public Law 103–66 requires that, for discharges occurring after September 30, 1993, the unadjusted standard Federal rate be reduced by 7.4 percent. Further, this law requires that, for cost reporting periods beginning on or after October 1, 1993, the Secretary redetermine hospital payment methodologies under the capital-PPS transition system to take that reduction in account. Consequently, the model reduces the unadjusted standard Federal rate by 7.4 effective FY 1994. Because of the budget neutrality provisions in effect through FY 1995, this provision does not reduce aggregate payments for capital in FY 1994. Since this provision reduces the Federal rate, to maintain budget neutrality, the hospital-specific rate must be further increased. (The reasons for these results are discussed in Part III, sections A.7 and B.4 of the Addendum to this final rule.) Consistent with the legislation, the model makes a FY 1994 redetermination for fully prospective hospitals and models them as hold-harmless hospitals if their FY 1994 hospital-specific rate is greater than the FY 1994 Federal rate.

Section 412.308(c)(4)(ii) requires that the estimated aggregate payments for the fiscal year, based on the Federal rate after any changes resulting from DRG reclassifications and recalibration and the geographic adjustment factor, equal the estimated aggregate payments based on the Federal rate that would have been made without such changes. For FY 1993, the budget neutrality adjustment factor is .9980. To determine the factor for FY 1994, we first determined the portion of the Federal rate that would be paid for each hospital in FY 1994 based on its applicable payment methodology. We then compared what aggregate Federal rate payments would be based on the FY 1993 DRG relative weights and FY 1993 geographic adjustment factor to aggregate Federal rate payments based on the FY 1994 relative weights and the FY 1994 geographic adjustment factor. In making the comparison, we held the FY 1994 Federal rate portion constant and set the other budget neutrality adjustment factor and exceptions reduction factor to 1.00. We determined that to achieve budget neutrality for the changes in the geographic adjustment factor and DRG classifications and relative weights, a budget neutrality adjustment of 1.0053 should be applied to the FY 1993 adjustment of .9980 to yield a cumulative adjustment of 1.0033.

The methodology used to determine the recalibration and geographic (DRG/GAF) budget neutrality adjustment factor is similar to that used in establishing budget neutrality adjustments under the prospective payment system for operating costs. One difference is that under the operating prospective payment system, the budget neutrality adjustments for the effect of geographic reclassifications are determined separately from the effects of other changes in the hospital wage index and the DRG weights. Under the capital prospective payment system, there is a single DRG/GAF budget neutrality adjustment factor for changes in the geographic adjustment factor (including geographic reclassification) and the DRG relative weights. In addition, there is no adjustment for the effects that geographic reclassification has on the other payment parameters, such as the payments for serving low income patients or the large urban add-on.

In addition to computing the DRG/GAF budget neutrality adjustment factor, we used the model to project total aggregate payments under the prospective payment system and to compute the budget neutrality adjustment factor that would result in estimated payments under the capital prospective payment system equal to 90 percent of what would have been payable on a reasonable cost basis. This budget neutrality factor is applied to the Federal and hospital-specific rates, but not to the hold-harmless payments.

Additional payments under the exceptions process are financed through a reduction in the Federal and hospital-specific rates. Therefore, we used the model to calculate estimated exceptions payments and the exceptions reduction factor. This exceptions reduction factor ensures that estimated aggregate payments under the capital prospective payment system, including exceptions payments, equal what aggregate payments would be under the capital prospective payment system without an exceptions process. Since changes in the level of the payment rates change the level of payments under the exceptions process, the budget neutrality and exceptions adjustments factors must be determined through iteration. Further, these two factors interact with each other so that they must be determined simultaneously. We successfully determined values for these factors so that the exceptions adjustment factor is correct and estimated payments under the capital prospective payment system equal 90 percent of estimated Medicare inpatient capital costs.

In the August 30, 1991 final rule (56 FR 43517), we indicated that we would publish each year the estimated payment factors generated by the model to determine payments for the next 5 years. The table below provides the actual factors for FY 1992, FY 1993, and FY 1994 , and the estimated factors that would be applicable through FY 1998. We caution that, except with respect to FY 1992, FY 1993, and FY 1994, these are estimates only, and are subject to revisions resulting from continued methodological refinements, more recent data, and any payment policy changes that may occur. In this regard, we note that in making these projections we have assumed that the cumulative DRG/GAF adjustment factor will remain at 1.0033 for FY 1994 and later because we do not have sufficient information to estimate the change that will occur in the factor for years after FY 1994.

The projections are as follows:

Fiscal year	Increase in cost per discharge [1]	Update factor	Exceptions reduction factor	Budget neutrality factor	Federal rate (after outlier reduction)
1992	3.27	N/A	.9813	.9602	415.59
1993	6.85	6.07	.9756	.9162	[2] 417.29
1994	7.31	3.04	.9485	.8947	[3] 378.34
1995	8.01	2.57	.9000	.9470	389.74
1996	8.14	5.05	.9000	N/A	432.34
1997	8.19	7.08	.9000	N/A	462.95
1998	8.43	7.66	.9000	N/A	498.41

[1] Note: Adjusted for estimated 1.6 percent annual increase in case-mix for FY 1992, 1.3 percent for FY 1993 and 2.0 percent for FY 1994 and later.

[2] Note: Includes the DRG/GAF adjustment factor of 0.9880 and the change in the outlier adjustment from 0.9497 in FY 1992 to 0.9496 in FY 1993.

[3] Note: Includes the 7.4 percent reduction in the unadjusted standard Federal rate. Also includes the DRG/GAF adjustment factor of 1.0033 and the change in the outlier adjustment from 0.9496 in FY 1993 to 0.9454 in FY 1994. Future adjustments are, for purposes of this projection, assumed to remain at the same level.

Comments: We received several comments on the capital acquisition model and the assumptions and projections employed in the model. Some commenters expressed concern that HCFA has not shared the details of the capital acquisition model. One commenter objected to the rate reduction in the proposed rule unless HCFA is able to demonstrate a rational basis for its projections and subject those projections to public scrutiny. Other commenters contended that the proposed reduction to the Federal rate illustrates the sensitivity of the capital rate estimates to the assumptions used in the capital acquisition model. These commenters asserted that lack of precision in these estimates has led to repeated corrections to model estimates.

Response: It is important to distinguish between the capital acquisition model and the assumptions that the model employs. The assumptions are capital cost-per-case projections that determine the aggregate expenditure level from which the budget neutrality target is derived. We have published the details of the capital cost-per-case projections and the revisions we have made to them on several occasions (most recently in our May 26, 1993 proposed rule at 58 FR 30278). We have received no specific comments on the derivation of these projections. We present another account of the current assumptions and revisions to them in Part III, section A.5 of the Addendum to this final rule. We base these projections on the best available data and trend analysis available at the time when we derive them. As we update the data and trend analysis, the accuracy of the projections should improve. This is why we continue to revise them in each successive rulemaking document. Commenters' concerns about the accuracy of the projections confirm our practice of continually revising these projections. By design, the capital acquisition model is constrained to the assumptions that project capital expenditure changes, so that the assumptions drive the model results. As we stated in the August 30, 1991 final rule for prospective payment system for capital-related costs (56 FR 43521), the "model is integrated from several sources and requires intimate knowledge of all these sources and their interactions to successfully perform any meaningful analysis." For this reason, it has been our policy not to release the model and its accompanying code. However, we continue to publish a description of the model in each prospective payment system rulemaking document, and we believe that this description, along with our detailed presentation of the assumptions and changes to the capital expenditure projections, should provide sufficient basis for public evaluation of proposed changes to the rates and factors.

Appendix C—Recommendation of Update Factors for Operating Cost Rates of Payment for Inpatient Hospital Services

I. Background

Several provisions of the Act address the setting of update factors for services furnished in FY 1994 by hospitals subject to the prospective payment system and those excluded from the prospective payment system. Section 1886(b)(3)(B)(i)(IX) of the Act, as amended by section 13501(a)(1) of Public Law 103–66, sets the FY 1994 applicable percentage increases for prospective payment hospitals for FY 1994 as the market basket percentage increase minus 2.5 percentage points for hospitals located in urban areas and the market basket percentage increase minus 1.0 percentage points for hospitals located in rural areas.

Section 1886(b)(3)(B)(ii) of the Act, as amended by section 13502(a)(1)(C) of Public Law 103–66, sets the FY 1994 percentage increase in the rate-of-increase limits for hospitals and hospital units excluded from the prospective payment system equal to the rate of increase in the hospital market basket minus a reduction factor (not to exceed −1.0 percent) depending on the provider's operating costs and target amounts, as described in section IV.E of the preamble to this final rule.

Beginning in FY 1994, section 1886(b)(3)(B)(iv), as added by section 13501(a)(2)(A) of Public Law 103–66, moves the update to the hospital-specific rate applicable to sole community hospitals and Medicare-dependent, small rural hospitals from a cost reporting period basis to a Federal fiscal year basis. Under this section, the update to the hospital-specific rate for FY 1994 is equal to the rate of increase in the hospital market basket minus 2.3 percentage points, taking into account the portion of hospital cost reporting periods beginning in FY 1993 that occur during FY 1994.

Therefore, in accordance with section 1886(d)(3)(A) of the Act, we are updating the average standardized amounts, the hospital-specific rates, and the rate-of-increase limits for hospitals excluded from the prospective payment system as provided for in section 1886(b)(3)(B) of the Act, as set forth above. Based on the currently forecasted market basket increase of 4.3 percent for hospitals subject to the prospective payment system, the updates in the standardized amounts are 1.8 percent for hospitals in urban areas and 3.3 percent for hospitals in rural areas. The update in the hospital-specific rate applicable to sole community hospitals and Medicare-dependent, small rural hospitals is 2.0 percent (after appropriate adjustment to account for the portion of the hospital's cost reporting period beginning during FY 1993 that occurs during FY 1994). The

update for hospitals excluded from the prospective payment system is based on the currently forecasted percentage increase in the market basket for these hospitals and equals 4.3 percent minus an appropriate reduction factor (not to exceed −1.0 percent), as described in section VI.B of the preamble.

Sections 1886(e)(2)(A) and (e)(3)(A) of the Act require that the Prospective Payment Assessment Commission (ProPAC) recommend to the Congress by March 1, 1993 an update factor for FY 1994 that takes into account changes in the market basket index, hospital productivity, technological and scientific advances, the quality of health care provided in hospitals, and long-term cost effectiveness in the provision of inpatient hospital services.

Section 1886(e)(4) of the Act requires that the Secretary, taking into consideration the recommendations of ProPAC, recommend update factors for FY 1994 that take into account the amounts necessary for the efficient and effective delivery of medically appropriate and necessary care of high quality. As required by section 1886(e)(5) of the Act, we published the recommended FY 1994 update factors under section 1886(e)(4) of the Act as Appendix D of the May 26, 1993, proposed rule (58 FR 30441).

II. Secretary's Final Recommendations for Updating the Prospective Payment System Standardized Amounts

We received several public comments concerning our proposed recommendation. After consideration of the arguments presented, we have decided that our final recommendation will be the same as our proposed recommendation. That is, we are recommending that the standardized amounts be increased by an average amount equal to the market basket percentage increase minus 1.9 percentage points for hospitals located in urban areas and the market basket percentage increase minus 0.8 percentage points for hospitals in rural areas. We are recommending an increase equal to the market basket rate of increase minus 1.9 percentage points for the hospital-specific rate for sole community hospitals. We believe that the hospital-specific rate should be updated by the same percentage increase as the urban standardized amounts. Our recommendation for a higher update to the rural standardized amount is intended to reduce the differential between the standardized amounts for other urban and rural hospitals, which is not an applicable consideration for hospital-specific rates.

In recommending these increases, we have followed section 1886(e)(4) of the Act, which requires that we take into account the amounts necessary for the efficient and effective delivery of medically appropriate and necessary care of high quality. In addition, as required by section 1886(e)(4) of the Act, we have taken into consideration the recommendations of ProPAC. We believe our analyses, which measure changes in hospital productivity, scientific and technological advances, practice pattern changes, and changes in case mix, support a recommendation that the update for urban hospitals and the hospital-specific rates applicable to sole community hospitals be no more than the market basket minus 1.9 percentage points. We note that the results of our framework supported an update in the range of the market basket rate of increase minus 2.8 percentage points to the market basket rate of increase minus 1.9 percentage points. The update for hospitals located in urban areas set forth in Public Law 103–66 for FY 1994, that is, the market basket rate of increase minus 2.5 percentage points, falls within the range supported by our framework.

We believe a higher update for the standardized amount applicable to rural hospitals is appropriate in order to phase out the differential between the rural and other urban standardized amounts, as required by section 4002(c) of Public Law 101–508. We are recommending that the rural standardized amount be updated by an average amount equal to the market basket rate of increase minus 0.8 percentage points.

As we noted in the proposed rule (58 FR 30445), we disagree with ProPAC's recommendation that the hospital-specific rates applicable to sole community hospitals be increased by the update factor applicable to the rural standardized amounts. We believe that the considerations used to develop the update recommendations for the urban standardized amounts are also applicable to the hospital-specific rates, and that the differential update applied to the rural standardized amounts to eliminate the difference between the rural and other urban standardized amounts is not a relevant consideration for the hospital-specific rates.

Comment: A few commenters disagree with our recommended updates of the market basket rate of increase minus 1.9 percentage points for urban hospitals, and the market basket rate of increase minus 0.8 percentage points for rural hospitals. The commenters believe that updates lower than the change in the market basket are insufficient to ensure hospital financial stability, and urge that we implement the updates set forth in Public Law 101–508, that is, the market basket rate of increase for urban hospitals, and the market basket rate of increase plus 1.5 percentage points for rural hospitals.

Response: We believe that our recommended updates are sufficient to ensure the continued availability of efficiently provided care of high quality for Medicare beneficiaries. As explained in Appendix D of the proposed rule, our recommended updates are lower than the increase in the market basket because of previous market basket forecast errors, expected hospital productivity gains, and the difference between real case-mix increase and total case-mix increase. We will, however, implement the updates in accordance with the statute.

Comment: A few commenters agree with ProPAC that the share of hospital wages in the market basket should be increased.

Response: A detailed response to this comment was provided in the September 4, 1990, final rule (55 FR 36047) when the current hospital market basket was implemented. As we stated in the May 26, 1993 proposed rule (58 FR 30445), we believe that it would be equally inappropriate to use 100 percent internal (that is, hospital industry-specific) price proxies or 100 percent external price proxies. We prefer to use economy-wide proxies for those occupations that are generally employed both inside and outside hospitals, such as managers, administrators, clerical and maintenance workers. We believe that the economy-wide rate of increase is the more appropriate measure for these types of employees, since that is the relevant labor market for these employees. In contrast, we use hospital-industry proxies for those categories of workers, such as registered nurses, that are not hired in large numbers in other sectors of the economy.

Comment: Some commenters believe that it would be appropriate to adjust the market basket for the cost of new technologies.

Response: We do not believe that it is appropriate to adjust the market basket for the cost of new technologies. The update framework accounts for the role of new technologies in two ways. First, we account for cost-increasing, quality-enhancing new technologies in the intensity component of our update recommendation (which is an add-on to the market basket rate of increase). Second, we account for cost-decreasing new technologies through a productivity adjustment. This adjustment allows for

those technologies that allow hospitals to treat their patients at lower cost.

Comment: A commenter believes that rural hospitals should receive the same update as urban hospitals, rather than the higher updates recommended by us and required by the Act.

Response: We believe that it is appropriate to set a higher update for the rural standardized amount, given the requirement under section 1886(d)(3)(A)(iii) of the Act that the rural standardized amount be set equal to the other urban standardized amount in FY 1995. The higher update provides for a gradual transition to the elimination of the rural standardized amounts.

Comment: A commenter disagrees with our use of the FY 1992 forecast error in setting our recommended update amounts. This commenter believes that since the actual FY 1992 update was the market basket rate of increase minus 1.6 percentage points for hospitals located in urban areas, and the forecast error in the FY 1992 market basket rate of increase was only 1.3 percentage points, the forecast error was built into the rates, and should not be removed through the FY 1994 update factor.

Response: The FY 1992 update factor was set by law at the market basket rate of increase minus 1.6 percentage points. If the FY 1992 rate of increase had been correctly forecast, the FY 1992 update would have been 1.3 percentage points lower. While we do not believe that it would be appropriate to recoup the excess payments made, we believe that the current standardized amounts should reflect the correct rate of increase.

Comment: A commenter believes that the prospective payment system rates are inadequate, and should be increased to reflect the current costs of treating Medicare beneficiaries.

Response: We believe that payments under the prospective payment system are sufficient for the provision of effective and efficiently provided care of high quality to Medicare beneficiaries. Accordingly, we believe that costs in excess of prospective payments are generally reflective of industry inefficiencies. In the September 1, 1992 final rule (57 FR 40014), we presented an analysis of expected increases in cost per case. Expected increases were determined based on changes in real case mix, productivity, and allowable intensity (that portion of the increase in the cost of services provided per discharge due to within DRG severity increases and cost increasing new technology). We compared the expected increases in cost per case to the increases in payment per case, and found that payments per case have increased at a sufficient rate to compensate for the expected cost per case increases.

III. Secretary's Final Recommendation: for Updating the Rate-of-Increase Limits for Excluded Hospitals and Units

We received several public comments concerning our proposed recommendation on the update factor for excluded hospitals and hospital units. After consideration of all the arguments presented, we have decided that our final recommendation will be that hospitals and hospital units excluded from the prospective payment system receive an update equal to the percentage increase in the market basket that measures input price increases for services furnished by excluded hospitals minus 1.0 percentage point. Thus, given the current estimate of the change in the market basket for excluded hospitals of 4.3 percent, our final recommendation is an update of 3.3 percent. We note that the updates for hospitals and units excluded from the prospective payment system as set in Public Law 103–66 is the market basket rate of increase minus 1.0 percentage point, adjusted to account for the relationship between the provider's allowable operating cost per case and its target amount.

Comment: One commenter believes that the proposed update for rural facilities excluded from the prospective payment system should be the same as that for rural facilities subject to the prospective payment system, that is, the market basket rate of increase plus 1.5 percentage points. The commenter states that excluded rural facilities face the same increase in costs that rural prospective payment system providers do, and that, as a result, their updates should be the same.

Response: The updates that we will implement for rural facilities, both those subject to the prospective payment system and those excluded from the prospective payment system, are those mandated by the Social Security Act. Further, we note that the additional update for rural hospitals subject to the prospective payment system is designed to achieve a gradual transition in reducing the differential between the rural and other urban standardized amounts, before these amounts become equivalent beginning in FY 1995. Facilities excluded from the prospective payment system are paid based on the lesser of their average cost per case or their updated rate of increase limit. As a result, rural excluded facilities are paid based on their own costs, either current year costs, or for updated base year costs.

Appendix D—Development of Update Framework for Prospective Payment System for Inpatient Hospital Capital-Related Costs

I. Introduction

For FY 1992 through FY 1995, § 412.308(c)(1) provides that the update for the capital prospective payment rates (Federal rate and hospital-specific rate) will be based on a 2-year moving average of actual increases in Medicare inpatient capital costs per discharge. The regulations provide that, beginning in FY 1996, HCFA will determine the update in the capital prospective payment rates based on an analytical framework that will take into account (1) changes in the price of capital (which we will incorporate into a capital input price index), and (2) appropriate changes in capital requirements resulting from development of new technologies and other factors (such as the diffusion of existing technologies and existing hospital capacity and utilization). The objective of the capital update framework is to determine a rate of increase in aggregate capital prospective payments which, along with a rate of increase in DRG operating payments, ensures a joint flow of capital and operating services for efficient and effective care for Medicare patients.

Although the analytical framework will not be employed to determine the annual update factor until FY 1996, we are presenting a series of preliminary models, using available data and concepts, of an update framework for the prospective payment system for hospital inpatient capital-related costs. We have presented models in the final rules for FY 1992 and FY 1993, and in the proposed rule for FY 1994. We received six comments on the most recent model, which was published as appendix E to the May 26, 1993 proposed rule. These comments are discussed below in sections II.C. and II.D.

The model update framework includes a capital input price index that parallels the operating input price index. The capital input price index measures the pure price changes associated with changes in capital-related costs (prices × "quantities"). The composition of capital-related costs is maintained at base-year FY 1987 proportions in the capital input price index. As such, the composition of capital reflects the underlying capital acquisition process. We selected FY 1987 as the base year for this

preliminary capital input price index for consistency with the operating input price index. We would periodically update both the operating and the capital input price indexes to reflect the changing composition of inputs for capital and operating costs. We expect to have rebased the capital and operating input price indexes by the time we implement the final capital update framework for FY 1996. The capital input price index below illustrates the methodology we propose to employ.

The model capital update framework, like the revised operating update framework, incorporates several policy adjustments in addition to the capital input price index. We would adjust for case-mix index-related changes, for intensity, and for the efficient and cost-effective use of capital (such as movable equipment, buildings and fixed equipment) in the hospital industry, as well as for error in the capital input price index forecast.

In developing the model framework, we are attempting as much as possible to maintain consistency with the revised operating framework, in order to facilitate the eventual development of a single prospective payment system update framework. We are also concerned with promoting the goals that motivated the adoption of the capital prospective payment system, especially the goals of promoting more effective and efficient utilization of capital resources in the hospital industry and establishing incentives for hospitals to make cost-effective decisions regarding acquisition of new capital resources.

It is important to emphasize that this presentation represents our current thinking, and that we encourage submission of comments and recommendations for further improvements. We are especially interested in suggestions regarding the proposed adjustment factor for capital productivity and efficiency. We also remain interested in suggestions regarding the capital input price index, the proposed policy adjustment factor for intensity, and alternative methodologies for deriving the factors. We welcome information concerning empirical studies and sources of data that could be useful in developing the framework. We will consider comments and recommendations on any aspect of the model framework in making further developments for presentation in next year's rulemaking process for the prospective payment system. Comments should be sent by December 31, 1993 to: Update Framework, Division of Hospital Payment Policy, 1-H-1 East Low Rise, Baltimore, Maryland 21207.

II. Measurement of Capital Input Price Increases

A. Introduction

HCFA proposed a capital input price index (CIPI) as one component in developing future update factors for the Federal rate in the September 1, 1992 **Federal Register**. We presented a revised version of the CIPI in the May 26, 1993 **Federal Register**. The proposed CIPI paralleled the operating input price index since both indexes were designed to measure input price changes for hospitals' current year expenses, that is, to separate pure price changes from quantity and expenditure changes. The operating sector input price index measures input price changes for operating-related expenses. The CIPI measures input price changes for capital-related expenses.

B. The HCFA Capital Input Price Index

The current version of the CIPI is based on the following assumptions:

- The Federal rate is based on the concept of capital-related expenses of capital assets used for patient care in the fiscal year and, therefore, any change in the Federal rate should take into account expected changes in the input price aspects of capital-related expenses;
- Capital-related expenses are defined as the sum of depreciation expense, capital-related interest costs, and other capital-related costs, including taxes, insurance, and leases; and
- The input prices related to capital-related expenses are beyond the control of the hospital industry (that is, the hospital is a price-taker, not a price-setter).

These assumptions lead directly to a definition of a CIPI that takes into account the price aspects of changes in depreciation expense, interest costs, and other capital-related costs. Further, the assumptions lead directly to input prices for depreciation expense and interest costs which, unlike operating costs, have a time dimension that must be captured in the CIPI.

In its original proposal, HCFA recommended that three categories of capital-related expenses be included in the CIPI: depreciation expense, interest costs, and other capital-related costs (taxes and insurance). We continue to believe these categories should be used in the CIPI. In response to comments and suggestions on our September 1, 1992 proposal, and in order to apply new research findings, we proposed a number of revisions to our original CIPI proposal in the May 26, 1993 **Federal Register**.

HCFA revised its original CIPI proposal in the following major respects:

- In its original proposal, HCFA implicitly assumed that the capital structure (the proportion of depreciation expense, interest costs, and other capital costs) for rentals and leases was the same as that for capital owner-operators. The results of the 1987 Assets and Expenditure Survey by the Bureau of the Census, Department of Commerce, called that assumption into question. We thus explicitly incorporated leasing costs into our index weighting system to reflect the results of the Survey.
- We continue to use historical purchase prices to evaluate the contribution of each year's depreciation amount within the time span limits imposed by the expected life of assets. However, we dropped the assumption that the same proportion of current real capital stock was acquired each year starting with the current year back to the earliest year in the expected life of the stock. Rather, we now use a proportional weight for each year that reflects the historic patterns of purchases of assets. A representative weighted mean price is computed for each relevant time span. The effect of this change is to give more weight to price changes in more recent periods. Thus, in periods of rapid inflation, the proportionately weighted price tends to rise more rapidly than the fixed weight price and, conversely, the price declines faster as inflation abates. Proportional weighting is a direct consequence of the definition of depreciation expenses and therefore is a correct procedure by definition.
- We continue to use two categories of straight-line depreciation expense: Building and fixed equipment, and movable equipment. However, additional data analysis required revision in the expected life for the two categories. We proposed to use 24 years expected life for buildings and fixed equipment, replacing the 25-year estimate used last year, and 10 years expected life for movable equipment, replacing the 7-year estimate used last year. The effect of these changes is to include fewer historic prices for building and fixed equipment and to include more historic prices for movable equipment.
- We continue to use FY 1987 as a base year for the CIPI. We revised the relative expenditure weights for each major capital-related expense category to reflect more recent data analysis and to account for findings in the 1987 Assets and Expenditure Survey, Bureau of the Census, Department of Commerce. The revised relative weights

reflect our best estimates of the combined capital-related expenses for hospital owner-operators and for leasers of capital equipment to hospital owner-operators. The revised estimates allocate a relative weight of .6479 to depreciation, .3305 to interest, and .0201 to other capital-related expenses compared to .655, .295 and .050 for the respective categories in our prior version. Similarly, we adopted relative internal expenditure weights for depreciation expense of .4694 for building and fixed equipment and .5306 for movable equipment compared to .540 and .460 for the respective categories in our prior version.

• In our original proposal for the interest section of the CIPI we adopted a number of assumptions about the input price proxies, weights, and types of and expected lives for debt instruments that we have revised in our more recent version. In the absence of definitive information on the expected life of debt instruments, we originally chose an average 20-year life for loans on building and fixed equipment and an average 6-year life for loans on movable equipment. In our more recent version, we proposed to use the same expected life for loan instruments as we use for expected life in the depreciation section, 24 years for building and fixed equipment loans and 10 years for movable equipment loans. These expected lives are proxies for actual loan terms and may be improved upon.

• In our original version we used a mortgage model to approximate the changing impact of old debt instruments on current interest amounts as the debt instruments age (that is, the decline in payments for interest as the principal is paid off). In our more recent version, we proposed to use a serial bond model, rather than a mortgage model, to approximate these effects. We adopted the bond model because it is simpler, because it purportedly applies to a large proportion of hospital debt, and because it closely simulates the interest payment effects for both bonds and mortgage financing. Consistent with weighting the historical purchase prices of capital assets, we now use a proportional weight for each year that reflects historic patterns of acquiring debt instruments. A representative weighted mean "price" for interest costs is computed for each relevant time span. An effect of this change is to give more weight to interest rate changes in more recent periods. More recent principal amounts are larger than earlier amounts because both the quantity of real capital financed and the purchase price per unit of real capital (two components of principal amounts) are larger in recent periods. The historic weighting method is a direct consequence of our definition of interest costs and, therefore, is a correct procedure by definition.

The purpose of these revisions was to adjust weights associated within the CIPI to reflect industry experience more accurately.

We use the same price proxies in the May 26, 1993 version that we described in the September 1, 1992 **Federal Register.** A number of alternative price proxies have been brought to our recent attention but, as yet, none meet the criteria we described in the FY 1993 final rule. Those criteria are: the price proxy data must be publicly available; it must be based on valid sampling designs; and it must have been collected for a sufficiently long period of time to ensure stability and credibility. We will continue to study possible alternative price proxies.

We applied our revised methodology using historical price proxy changes through 1992 and Data Resources Inc. (DRI) price proxy projections through 1998 (Table 1). The effects of recent declines in interest rates and in the purchase price of investment goods is apparent in the historical sections of Table 1.

TABLE 1.—HCFA CAPITAL INPUT PRICE INDEX PERCENT CHANGES, TOTAL AND COMPONENTS, FISCAL YEARS 1985 TO 1998

	Total capital related costs	Depreciation expense	Interest expense	Other capital related costs
Weight (1987)	1.0000	0.6479	0.3305	0.0216
Fiscal Year:				
Historical:				
1985	6.2	5.9	7.0	6.0
1986	4.3	5.2	2.4	5.5
1987	3.6	4.7	1.1	5.2
1988	3.7	4.3	2.4	4.8
1989	3.1	4.0	1.2	4.5
1990	2.8	3.7	0.9	4.3
1991	2.4	3.3	0.5	4.0
1992	1.6	2.6	−0.7	3.8
Forecast:				
1993	1.6	2.8	−0.8	3.7
1994	1.9	2.8	0.2	3.6
1995	2.2	2.8	1.0	3.5
1996	2.3	2.9	1.1	3.5
1997	2.7	2.9	2.1	3.5
1998	2.8	3.0	2.5	3.5

Source: Health Care Financing Administration.

The deceleration in price increases associated with depreciation amounts indicates more rapid deceleration for movable equipment than for building and fixed equipment (Table 2), a trend that we attribute to the older purchase prices captured by the longer expected life built into the building and fixed equipment category.

TABLE 2.—HCFA DEPRECIATION COMPONENT OF CAPITAL INPUT PRICE INDEX, PERCENT CHANGES, TOTAL AND SUBCOMPONENTS, FISCAL YEARS 1985 TO 1998

	Total depreciation expense	Building and fixed equipment depreciation expense	Movable equipment depreciation expense
Weight (1987)	.6479	.3041	.3438

TABLE 2.—HCFA DEPRECIATION COMPONENT OF CAPITAL INPUT PRICE INDEX, PERCENT CHANGES, TOTAL AND SUBCOMPONENTS, FISCAL YEARS 1985 TO 1998—Continued

	Total depreciation expense	Building and fixed equipment depreciation expense	Movable equipment depreciation expense
Fiscal Year:			
Historical:			
1985	5.9	6.0	5.7
1986	5.2	5.5	4.9
1987	4.7	5.2	4.3
1988	4.3	4.8	3.9
1989	4.0	4.5	3.6
1990	3.7	4.3	3.2
1991	3.3	4.0	2.7
1992	2.6	3.8	1.6
Forecast:			
1993	2.8	3.7	2.0
1994	2.8	3.6	2.0
1995	2.8	3.5	2.2
1996	2.9	3.5	2.3
1997	2.9	3.5	2.4

TABLE 2.—HCFA DEPRECIATION COMPONENT OF CAPITAL INPUT PRICE INDEX, PERCENT CHANGES, TOTAL AND SUBCOMPONENTS, FISCAL YEARS 1985 TO 1998—Continued

	Total depreciation expense	Building and fixed equipment depreciation expense	Movable equipment depreciation expense
1998	3.0	3.5	2.5

Source: Health Care Financing Administration

The effects of recent declines in interest rates were a major factor in the decelerating price associated with interest costs (Table 3). To obtain the total interest-related price change for each major asset category in Table 3, we multiplied the ratio changes in interest rates and purchase prices and converted the product to the percentage changes shown in the table.

TABLE 3.—HCFA INTEREST COMPONENT OF CAPITAL INPUT PRICE INDEX, PERCENT CHANGES

[Total and Subcomponents, Fiscal Years 1985 to 1998]

	Total	Building and fixed equipment			Movable equipment		
	Interest price change	Interest price change	Interest rate change	Purchase price change	Interest price change	Interest rate change	Purchase price change
Weight (1987)	0.3305	0.2393			0.0912		
Fiscal Year							
Historical:							
1985	7.0	7.7	1.5	6.0	5.1	−0.5	5.7
1986	2.4	3.5	−1.9	5.5	−0.7	−5.3	4.9
1987	1.1	2.3	−2.7	5.2	−1.9	−6.0	4.3
1988	2.4	3.3	−1.5	4.8	−0.1	−3.8	3.9
1989	1.2	2.1	−2.3	4.5	−1.2	−4.7	3.6
1990	0.9	1.6	−2.5	4.3	−1.1	−4.1	3.2
1991	0.5	1.1	−2.7	4.0	−1.2	−3.8	2.7
1992	−0.7	0.4	−3.3	3.8	−3.3	−4.8	1.6
Forecast:							
1993	−0.8	−0.1	−3.7	3.7	−2.6	−4.5	2.0
1994	0.2	0.6	−2.9	3.6	−0.8	−2.8	2.0
1995	1.0	1.1	−2.3	3.5	0.7	−1.5	2.2
1996	1.1	1.1	−2.3	3.5	1.0	−1.3	2.3
1997	2.1	1.9	−1.5	3.5	2.4	0.0	2.4
1998	2.5	2.3	−1.1	3.5	2.9	0.4	2.5

C. ProPAC Recommendation for Updating the Capital Prospective Payment System Federal Rate

ProPAC recommends the use of an update framework based on the premise that capital prospective payments are for future capital purchases. The ProPAC update framework includes a capital market basket component that measures 1-year changes in the purchase prices of a fixed basket of capital goods purchased by hospitals. The ProPAC framework also includes several policy adjustment factors. A forecast error correction factor adjusts payment rates so that the effects of past errors are not perpetuated. A financing policy adjustment accounts for the effects of substantial deviations from long-term trends in interest rates on hospital capital costs. The capital update framework also includes adjustments for scientific and technological advances, productivity, and case-mix change similar to those employed in the ProPAC operating update framework.

Comment: In its comment on the version of the update framework that appeared in the May 26, 1993 **Federal Register**, ProPAC agreed that both the ProPAC and HCFA update frameworks have the same goal—to ensure a flow of resources that will allow for the efficient and effective care of Medicare patients.

ProPAC also noted our observation (58 FR 30447) that there is a fundamental difference between the two frameworks. ProPAC believes that a prospective update should provide Medicare payments that are reflective of future capital prices rather than historical values, as in HCFA's model framework. ProPAC notes that HCFA bases its model on an interpretation of current law. ProPAC further states that its update methodology is fully consistent with the Medicare statute.

Response: A significant philosophical difference persists between the ProPAC and HCFA frameworks. ProPAC's framework is based on the premise that capital prospective payments are for future capital purchases. Thus, ProPAC's proposed capital market basket reflects the projected increase in the purchase price of capital goods from one year to the next. To put it another way, the market basket under the ProPAC framework reflects the price of replacing current capital stock at future prices.

HCFA's framework is based on the premise that capital prospective payments are for hospitals' future capital-related expenses rather than for future capital-related purchases. That is, HCFA's framework addresses the expenses associated with hospitals' given stock of capital in a particular fiscal year; ProPAC's framework ignores hospitals' present stock of capital and focuses on costs of capital purchases that hospitals will make in a particular fiscal year.

We continue to believe that the HCFA model framework is more consistent with the statutory intent, with Medicare program precedent, and with the methodology by which the Federal capital rate was originally developed. Section 1886(g)(1)(A) of the Act provides that "* * * instead of any amounts that are otherwise payable under this title with respect to the reasonable costs of * * * hospitals for capital-related costs of inpatient hospital services, the Secretary shall * * * provide for payment *for such costs* in accordance with a prospective payment system* * *". (Emphasis added.) This section of the Act further provides that the term "capital-related costs" has the meaning given to the term by the Secretary as of September 30, 1987. In the Medicare program, the term "capital-related costs" has always included the historical or accounting costs for capital, that is, net depreciation, as well as interest, taxes, insurance, and leases on depreciable assets.

ProPAC points out that the statute requires the Secretary to provide for "payment" (not reimbursement) of capital-related costs. It is true that the term "payment" is not as restrictive as "reimbursement." Unlike "reimbursement," the term "payment" does not necessarily require strict correlation between the amount of payment and the costs incurred in providing services. Nevertheless, the statute does state that the "payment" is "for" capital-related costs, thus linking the payment to those costs. Accordingly, the Federal capital rate was originally developed on the basis of the FY 1989 national average Medicare inpatient capital-related cost per case. To maintain consistency, we believe that the update should also be based on projected changes in the historical costs of capital.

It is important to note that the HCFA update methodology is not based solely on an interpretation of the statute. Even if we could agree that the ProPAC and HCFA approaches are equally consistent with the statute and with program precedent, we would prefer the HCFA methodology. That is because there is a sound economic reason for regarding the current purchase price of capital assets alone as an inadequate measure of the price of capital. The crucial distinguishing feature of capital assets is that they are consumed over time. Normal accounting rules recognize this feature of capital assets by prorating the expense of capital acquisitions over more than one time period. An expense (the product of price and quantity) prorated over more than one time period carries an implicit price factor into future periods that must be accounted for in any capital input price index. Consideration of the costs for all capital currently in use for patient care, not just the costs for current capital purchases, is necessary for this purpose. We do not believe that the ProPAC index adequately captures this aspect of changes in capital input prices.

Another way to understand the difference between the HCFA and ProPAC approaches, and our basis for rejecting the ProPAC approach, is in terms of the estimates developed by HCFA and the Bureau of Economic Analysis (BEA), Department of Commerce. HCFA and the BEA periodically estimate hospital consumption expenditures and hospital investment expenditures. Hospital consumption expenditures include expenses for labor, capital consumption allowances for depreciation and other expenses including capital related interest, other capital related expenses for taxes and insurance, and other non-capital related expenses. Hospital investment expenditures represent current year total outlays for new capital purchases (before amortization and depreciation allocation). These outlays derive from new debt or from equity financing. Current hospital investment outlays therefore generate future capital-related expenses for depreciation and future interest payments for debt but are relevant to current capital related expenses only insofar as a portion of incurred expenses for depreciation and interest applicable to current capital purchases is prorated to the current year.

HCFA proposes to create a capital input price index that relates to consumption expenditures rather than investment expenditures. HCFA's proposal thus is consistent with the input price index historically applied to update factors under the operating-PPS system. The HCFA operating-PPS Input Price Index and the HCFA CIPI are each designed to address the input price aspects of rates of change in the Medicare expenditure portion of these hospital consumption expenditures.

The ProPAC approach, however, confuses prorated capital related expenses incurred by hospitals for past capital purchases (the capital portion of hospital annual consumption expenditures) with current outlays for capital investments made by hospitals before pro-ration to annual expense amounts using Medicare cost principles (hospital investment expenditures). ProPAC proposes to apply a capital input price index based only on prices and appropriate interest rates for current investment expenditures rather than for pro-rated capital-related expenses for all capital purchases, past and present. Thus, ProPAC proposes to continue the operating input price index related to consumption expenditures, but to create a capital input price index related to investment expenditures. In contrast, the HCFA approach provides consistency with the existing operating-PPS input price index.

D. Other Comments

Comment: Two commenters supported HCFA's decision to include leasing costs in the CIPI. The commenters noted that leasing represents an important management tool in controlling costs while staying abreast of design advances.

Response: We continue to believe that changes in leasing costs should be reflected in the CIPI. Including such costs in the CIPI is a direct result of basing the CIPI on the change in capital-related expenses, rather than on the annual change in capital purchase prices, as in the ProPAC index.

Comment: One commenter disagreed with ProPAC's recommended framework, which ignores a hospital's present stock of capital and focuses only on the costs of capital purchases that hospitals will make in a particular year. The commenter contended that the ProPAC approach does not take into account all the expenses associated with the on-going cost of capital assets.

Response: As discussed above, we agree with this comment.

Comment: One commenter observed that capital rentals differ from capital leases. The commenter observed that lessees are required to keep leased equipment for the duration of a lease whether or not it continues to be needed, but that rentals have no specific term and, therefore, the equipment can be returned if it is no longer needed. The commenter suggested that renting may provide more efficient use of capital resources under some circumstances and should be recognized separately in the CIPI.

Response: We are seeking information to demonstrate what proportions of total capital-related expenses relate to leases and to rentals, and whether distinguishing leases and rentals would result in a material difference in the rates of change in the CIPI.

Comment: Two commenters objected to HCFA's proposal to increase the expected life of movable equipment from 7 years to 10 years in the CIPI. The commenters suggested that this change may assume a slower rate of technological change than may be reasonable.

Response: We derive the expected life of movable equipment from Medicare cost reports by dividing the balance sheet book value for movable equipment by the current year depreciation amount. Information currently available from Medicare cost reports for recent years indicate that the expected life for movable equipment tends to be approximately 10 years. Recent instructions for improved reporting of capital-related expenses on the Medicare cost report may suggest a different expected life for movable equipment. We will incorporate any changes dictated by the data.

III. Case-Mix Adjustment and Adjustment for Forecast Error

The case-mix index (CMI) is the measure of the average DRG weight for cases paid under the prospective payment system. Because the DRG weight determines the prospective payment for each case, any percentage increase in the CMI corresponds to an equal percentage increase in hospital payments.

The case-mix index can change for any of several reasons: because the average resource use of Medicare patients changes ("real" case-mix change), because changes in hospital coding of patient records result in higher weight DRG assignments ("coding effects"), and because the annual DRG reclassification and recalibration changes may not be budget neutral ("reclassification effect"). In the revised update framework for the prospective payment system for operating costs, we adjust the update upwards to allow for real case-mix change, but remove the effects of coding changes on the case-mix index. We also remove the effect on total payments of prior changes to the DRG classifications and relative weights, in order to retain budget neutrality for all CMI-related changes other than patient severity (for example, we adjust for the effects of the FY 1992 DRG reclassification and recalibration as part of our FY 1994 update recommendation). The operating adjustment consists of a reduction for total observed case-mix change, an increase for the portion of case-mix change that we determine is due to real case-mix change rather than coding modifications, and an adjustment for the effect of prior DRG reclassification and recalibration changes. We proposed to adopt this CMI adjustment as well in the capital update framework.

We received no comments on the proposed CMI adjustment.

The revised operating update framework contains an adjustment for forecast error. The input price index forecast is based on historical trends and relationships ascertainable at the time the update factor is established for the following year. In any given year there can be unanticipated price fluctuations that can result in differences between the actual increase in prices faced by hospitals and the forecast used in calculating the update factors. We continue to believe that the capital update framework should include a forecast error adjustment factor. In setting a prospective payment rate under the proposed framework, we would make an adjustment for forecast error only if our estimate of the capital input price index rate of increase for any year is off by 0.25 percentage points or more. There is a 2-year lag between the forecast and the measurement of the forecast error. Thus, for example, we would adjust for a forecast error made in FY 1996 through an adjustment to the FY 1998 update.

We received no comments on the proposed forecasting error adjustment.

IV. Policy Adjustment Factors

The capital input price index measures the pure price changes associated with changes in capital-related costs (prices x "quantities"). The composition of capital-related costs is maintained at base-year 1987 proportions in the capital input price index. We would address appropriate changes in the amount and composition of capital stock through the policy adjustment factors.

The revised update framework for the prospective payment system for operating costs includes factors designed to adjust the input price index rate of increase for policy considerations. Under the revised operating framework, we adjust for service productivity (the efficiency with which providers produce individual services such as laboratory tests and diagnostic procedures) and intensity (the amount of services used to produce a discharge). The service productivity factor for the operating update framework reflects a forward-looking adjustment for the changes that hospitals can be expected to make in service-level productivity during the year. A hospital retains any productivity increases above the average.

The intensity factor for the operating update framework reflects how hospital services are utilized to produce the final product—the discharge. This component accounts for changes in the use of quality-enhancing services, changes in within-DRG severity, and expected modification of practice patterns to remove cost-ineffective services. We originally proposed that the intensity adjustment factor in the revised operating-PPS framework be adopted in the capital update framework. That factor remains a part of our developing framework. Under the revised operating update framework, we calculate case-mix constant intensity as the change in total charges per admission, adjusted for price level changes (the CPI hospital component) and changes in real case mix. The use of total charges in the calculation of the proposed intensity factor makes it a total intensity factor, that is, charges for capital services are already built into the calculation of the factor. We can therefore incorporate the proposed intensity adjustment from the operating update framework into the capital update framework. In the absence of reliable estimates of the proportions of the overall annual intensity increases that are due, respectively, to ineffective practice patterns and to the combination of quality-enhancing new technologies and within-DRG complexity, we

proposed to assume, as in the revised operating update framework, that one-half of the annual increase is due to each of these factors. The capital update framework would thus provide an add-on to the input price index rate of increase of one-half of the estimated annual increase in intensity to allow for within-DRG severity increases and the adoption of quality-enhancing technology.

In our previous discussions of an efficiency adjustment, we suggested that the adjustment should take into account two considerations. One is that capital inputs, unlike operating inputs, are generally fixed in the short run. The productivity target in the revised operating framework operates on a short-term, year-to-year basis. Targets for capital efficiency and cost-effectiveness, however, must operate on a longer term basis. The other consideration is that, prior to the adoption of the capital prospective payment system, Medicare payment policy for capital-related costs, as well as the policies of other payers, did not provide sufficient incentives for efficient and cost-effective capital spending. As a result, capital costs per case, and therefore base year prospective capital rates, may be higher than would have been consistent with capital acquisition policy in more efficiency-oriented markets. A guiding principle in devising an efficiency adjustment is therefore that Medicare capital prospective payment rates should not provide for maintenance of capital in excess of the level that would be produced in an efficiency-oriented competitive market.

As a preliminary examination of this issue, we analyzed the change in actual Medicare capital cost per case for FYs 1986–1991 in relation to the change in the capital input price index (which accounts for change in the input prices for capital-related costs), and the other adjustment factors that we were then proposing to include in the framework, that is, the increase in real case mix, and the increase in intensity due to quality-enhancing technological change and within-DRG complexity. We found rates of increase in spending per case that exceeded the rate of increase attributable to inflation in capital input prices, quality-enhancing intensity increases, and real case-mix growth.

Economic theory suggests that an industry with a guaranteed return on capital (such as the hospital industry prior to prospective payment for capital-related costs) would have a tendency to be overly capitalized relative to more competitive industries. This is because the incentive for firms in such an industry is to compete on the basis of more capital-intensive production processes than firms in other industries. As a result, capital costs per case, and therefore base year prospective capital rates, may be higher than would have been consistent with capital acquisition policy in more efficiency-oriented competitive markets.

Our analysis was designed to examine whether hospitals had in fact responded to the incentives of the cost-based reimbursement system for capital by expanding beyond what was necessary for efficient and cost-effective delivery of services. The analysis confirmed that volume and intensity of capital acquisition far outpaced the increase in capital input prices during the years between the implementation of the prospective payment system for operating costs and the introduction of the capital prospective payment system. Even accounting for real CMI increases and increases in intensity attributable to cost-increasing but quality-enhancing new technologies, there remains a large excess of capital-related spending.

The following tables show the results of our most recent analysis, based on the most current data available and the most recent projections. Differences between these tables and the tables in the May 26, 1993, **Federal Register** are due to revised figures for average capital cost per case increases, based on the most recent data and projections. Table 4 shows the results when real case-mix increase is assumed to be 1.0 percent annually. Table 5 shows the results when real case-mix increase is assumed to be 1.4 percent annually.

TABLE 4.—CUMULATIVE PERCENTAGE CHANGE IN CAPITAL-RELATED COST PER CASE DUE TO INFLATION, REAL CMI, AND INTENSITY, 1986–1991

Year	CIPI [1]	Real CMI [2]	Allowable intensity [3]	Resulting increase [4]	Percent change cost/case [5]	Residual [6]
1986	4.3	1.0	2.1	7.6	19.9	11.5
1987	3.6	1.0	2.5	7.3	14.9	7.1
1988	3.7	1.0	1.5	6.3	7.3	0.9
1989	3.1	1.0	0.5	4.7	8.1	3.3
1990	2.8	1.0	0.2	4.0	6.4	2.3
1991	2.4	1.0	0.1	3.5	4.4	0.8
Cumulative (compounded)	.....	.....	.....	38.2	77.5	28.4

[1] Figures from Table 1, section III.
[2] Assuming that real CMI increase is 1.0 percent annually.
[3] One half of observed intensity increase, as determined by the of the joint operating/capital intensity measure.
[4] The increase attributable to inflation, real CMI, and allowable intensity, calculated as the product of the rates of increase of those factors (that is, 1.043×1.01×1.021=1.076 for 1986).
[5] Figures supplied by HCFA's Office of the Actuary.
[6] The actual increase in average cost per case divided by the increase attributable to inflation, real CMI, and allowable intensity (that is, 1.199/1.075=1.115, an 11.5 percent residual for 1986).

TABLE 5.—CUMULATIVE PERCENTAGE CHANGE IN CAPITAL-RELATED COST PER CASE DUE TO INFLATION, REAL CMI, AND INTENSITY, 1986–1991

Year	CIPI [1]	Real CMI [2]	Allowable intensity [3]	Resulting increase [4]	Percent change cost/case [5]	Residual [6]
1986	4.3	1.4	1.9	7.8	19.9	11.3

TABLE 5.—CUMULATIVE PERCENTAGE CHANGE IN CAPITAL-RELATED COST PER CASE DUE TO INFLATION, REAL CMI, AND INTENSITY, 1986–1991—Continued

Year	CIPI [1]	Real CMI [2]	Allowable intensity [3]	Resulting increase [4]	Percent change cost/case [5]	Residual [6]
1987	3.6	1.4	2.3	7.5	14.9	6.9
1988	3.7	1.4	1.3	6.5	7.3	0.7
1989	3.1	1.4	0.3	4.9	8.1	3.1
1990	2.8	1.4	0.0	4.2	6.4	2.1
1991	2.4	1.4	−0.1	3.7	4.4	0.6
Cumulative (compounded)	.....	.....	.....	39.9	77.5	26.9

[1] Figures are from Table 1, section III.
[2] Assuming that real CMI increase is 1.4 percent annually.
[3] One half of intensity increase as determined by the methodology of the joint operating/capital intensity measure.
[4] The increase attributable to inflation, real CMI, and allowable intensity, calculated as the product of the rates of increase of those factors (that is, 1.043×1.014×1.019=1.078 for 1986).
[5] Figures supplied by HCFA's Office of the Actuary.
[6] The actual increase in average cost per case divided by the increase attributable to inflation, real CMI, and allowable intensity (that is, 1.199/1.077=1.113, an 11.3 percent residual for 1986.

We believe that the long-run adjustment for capital efficiency and cost-effectiveness should take into account the efficiency and effectiveness of the capital resources present in the base year for the capital prospective payment system. We do not believe that Medicare capital payment rates should provide for maintenance of capital in excess of the level that would be produced in an efficiency-oriented competitive market. The capital efficiency adjustment should be designed to give hospitals an incentive to reduce inefficiency and ineffectiveness in capital resources.

In the absence of another approach, we suggested in the May 26, 1993 proposed rule that the residual analysis could provide the basis for a capital efficiency adjustment (58 FR 30457). To the degree that base year rates for the capital prospective payment system reflect costs that were higher than those that would have been consistent with capital acquisition policy in a more efficiency-oriented competitive market, we suggested that the annual update could be reduced on a long-term basis. Such an adjustment would not necessarily imply the eventual removal of the entire residual we have identified from the capital update. Rather, we would continue to study the data in order to identify the proportion of the residual that should be employed to reduce the update and the rate at which the adjustment should be applied. We would also take into account the 7.4 percent reduction to the standard Federal rate mandated by Public Law 103–66. (We discuss this reduction in section V.C of the preamble to this final rule, and in section III.A of the addendum.) As we have previously noted, our eventual goal is to develop a unified update framework for both the capital and the operating prospective payment system. Such a framework will require a total factor productivity measure. While we work to develop a unified framework incorporating a total factor measure, we would employ the residual analysis as the basis for an adjustment within the capital prospective payment system update framework to encourage a gradual reduction in capital stock above the level required for efficient and cost-effective care.

Comment: We received three comments on the policy adjustment factors in the previous model framework. One commenter recommended that an add-on adjustment for new technology be included in the framework. Two commenters disagreed with our approach to an efficiency adjustment. Specifically, these commenters took issue with our contention that Medicare capital payment rates should not provide for maintenance of capital in excess of what would be produced in an efficiency-oriented competitive market. The commenters argued that this approach ignores a very important difference between competitive business practice and the provision of hospital care. Competitive businesses may choose not to serve customers who are unable to pay. Community hospitals cannot choose to refuse service to those who cannot pay. The commenters urged HCFA to keep this fact in mind in developing the update framework.

Response: As we explained above, the methodology for developing the intensity adjustment in the model framework already accounts for the introduction of quality-enhancing new technology. We therefore do not believe that a separate technology adjustment is necessary or appropriate.

The efficiency adjustment included in the previous model framework was designed to be an interim measure, pending the development of a unified update framework for the prospective payment system with a total factor productivity adjustment. To the extent that base year rates for the capital prospective payment system reflect costs that were higher than those consistent with capital acquisition policy in a more efficiency-oriented competitive market, we suggested that the rate might be reduced on a long-run basis.

It is not clear how the provision of uncompensated care by community hospitals poses an objection to the efficiency adjustment in the model framework. Certainly the provision of uncompensated care does not account for the residual uncovered in our analyses. The residual measures the excess in the rate of change, during the years immediately prior to the implementation of the prospective payment system for capital-related costs, in Medicare capital cost per case over what can be accounted for by the increase in real case mix and the increase in intensity due to quality-enhancing technological change and within-DRG complexity. During the years in question, Medicare capital costs were reimbursed at a fixed percentage of cost (85 percent of cost in the period just prior to the implementation of the capital prospective payment system). Thus, the cost-ineffective capital spending patterns suggested by the residual analyses in no way result from costs for uncompensated care. Rather, the residual suggests that the hospital industry may have responded to the incentives of the cost-based reimbursement system for Medicare capital costs by expanding beyond what

was necessary for efficient and cost-effective delivery of services. We also do not believe that the provision of uncompensated care by community hospitals otherwise provides a reason to forego an adjustment designed to correct for excessive costs built into a rate designed for payment of Medicare beneficiaries.

Accordingly, we continue to believe that an efficiency adjustment should encourage the reduction in excess capital stock by reducing the rate over a number of years. The residual analysis would provide the basis for the reduction, although we would not necessarily remove all the residual. We would continue to study the data in order to identify the proportion of the residual that should be employed to reduce the update and the rate at which the adjustment should be applied.

We emphasize again that this approach to a capital efficiency adjustment represents only our current thinking. We believe that further development may be necessary before such an efficiency adjustment is ready for use as part of the update framework. We continue to welcome suggestions for improvement of the adjustment and we remain interested in considering suggestions for alternative approaches. In addition, we would welcome information on the possible effects of an efficiency adjustment on various segments of the hospital industry.

[FR Doc. 93–21026 Filed 8–31–93; 8:45 am]

BILLING CODE 4120–01–P

federal register

Wednesday
September 1, 1993

Part III

Department of Transportation

Federal Aviation Administration

14 CFR Part 121

Protective Breathing Equipment Training; Final Rule

DEPARTMENT OF TRANSPORTATION

Federal Aviation Administration

14 CFR Part 121

[Docket No. 24792; Amendment No. 121–234]

RIN 2120–AD76

Protective Breathing Equipment Training

AGENCY: Federal Aviation Administration (FAA), DOT.

ACTION: Final rule.

SUMMARY: The FAA revises the current regulations requiring Part 121 crewmembers to perform an approved firefighting drill using protective breathing equipment (PBE). The current rule requiring training of Part 121 crewmembers in the use of protective breathing equipment (PBE) requires the use of the PBE while fighting an actual fire. This final rule will permit air carriers to use a simulated fire during PBE training if their training includes an additional firefighting drill with an actual fire. This action was prompted by a letter from the Association of Flight Attendants (AFA) and petitions for exemption from Pan American World Airways (Pan Am) and United Airlines, Inc. The objective of the amendment is to ensure that each crewmember accomplishes a firefighting drill in which the crewmember combats an actual fire in addition to, or combined with, a PBE drill.

DATES: This final rule is effective September 1, 1993.

FOR FURTHER INFORMATION CONTACT: Larry Youngblut, Project Development Branch, AFS–240, Air Transportation Division, Flight Standards Service, 304B, Federal Aviation Administration, 800 Independence Avenue, SW., Washington, DC 20591, telephone (202) 267–8096.

SUPPLEMENTARY INFORMATION:

Availability of the final rule

Any person may obtain a copy of this amendment by submitting a request to the Federal Aviation Administration, Office of Public Affairs, Attention: Public Inquiry Center, APA–430, 800 Independence Avenue SW., Washington, DC 20591, or by calling (202) 267–3484. Communications must identify the amendment number of this final rule.

Background

The requirement for Part 121 crewmembers to perform an approved firefighting drill using PBE is prescribed in § 121.417(c)(1)(i) of the Federal Aviation Regulations (FAR). The regulation requires that each crewmember perform a one-time, approved firefighting drill with an actual fire during initial training, using at least one type of installed hand fire extinguisher appropriate for the type of fire to be fought and the type of installed PBE required by § 121.337.

On May 26, 1987, the current requirement was issued in Amendment No. 121–193, Protective Breathing Equipment (52 FR 20950; June 3, 1987). The amendment was based on National Transportation Safety Board (NTSB) recommendations and on information received from investigations of accidents in which smoke and noxious fumes may have impeded crewmembers fighting cabin fires. In addressing these safety concerns, the rule included a training requirement for crewmembers to perform an approved firefighting drill, fighting an actual fire, using PBE.

On March 14, 1989, the FAA issued Advisory Circular (AC) 121–31, Training on Protective Breathing Equipment, which provided guidance for crewmember training using PBE. This AC incorrectly offered two options for meeting the firefighting drill requirements. In the first option, a carrier could require each crewmember to perform a firefighting drill by fighting an actual fire using an appropriate fire extinguisher while wearing PBE. The second option, known as a "split drill," allowed crewmembers to perform the firefighting drill by fighting a simulated fire using an appropriate fire extinguisher while wearing PBE. However, the crewmember was required to perform an additional drill, which did not have to include the use of PBE, but which had to include the fighting of an actual fire using an appropriate fire extinguisher.

The FAA received a number of inquiries about the recommended firefighting drills described in AC 121–31. Action Notice 8430.40, Training on Protective Breathing Equipment, issued on June 7, 1989, also allowed the split drill, but additionally suggested that a carrier could use simulation for both drills if the training had been approved by the Air Transportation Division. In a January 26, 1990, letter to the FAA, AFA requested enforcement of § 121.417(c)(1)(i). AFA's letter stated that some flight attendant trainees are not fighting an actual fire while wearing PBE in the firefighting drill, as required by the regulation. AFA maintained that several carriers are not in compliance with the regulation and that any deviation from the requirements should be handled through the exemption process.

The FAA, in response to AFA's letter, stated that an actual fire must be fought during the drill required by § 121.417(c)(1)(i) and that PBE must be worn while fighting an actual fire in that drill. Therefore, any carrier who is not using an actual fire during the drill required in § 121.417(c)(1)(i) is not complying with the regulation.

United Airlines, Inc., filed a petition for exemption dated September 17, 1990. The petition requested exemption from § 121.417(c)(1)(i) in order to permit the one-time firefighting drill to be accomplished using "fire simulation." The petition stated that the use of training aids was not evaluated in the preamble to Amendment No. 121–193 and that an appropriate course of action is to improve training aids and apply them to carefully developed training objectives. The petition also stated that, with the exception of the preamble language of Amendment No. 121–193, the language of the final rule appears to allow a firefighting drill using simulated fires instead of actual fires. In addition, the petitioner expressed environmental concerns about the use of actual fires, the discharge of Halon fire extinguishers during firefighting training, and possible bans or restrictions of such training imposed by political jurisdictions.

Review of Industry Practices

An FAA review of Part 121 air carrier firefighting training programs disclosed that more than one-half of all of part 121 air carrier training programs require crewmembers to fight an actual fire while wearing PBE during firefighting drills. An additional one-fourth of the air carrier training programs require crewmembers to perform two firefighting drills—one in which they fight a simulated fire while wearing PBE and another in which they fight an actual fire without using PBE. The remaining air carrier training programs use only fire simulation in their firefighting and PBE drills despite an FAA interpretation, based on the preamble to Amendment 121–193 (52 FR 20950), that an actual fire must be fought during initial training.

Notice of Proposed Rulemaking No. 92–11

On August 14, 1992, the FAA proposed in Notice No. 92–11 that air carriers be allowed to separate the training required by § 121.417 into two categories: training on PBE and training on firefighting equipment. The FAA determined that simulated training should be allowed during the training on PBE, but also maintained its longstanding position that it is essential

longstanding position that it is essential that crewmembers complete a one-time firefighting drill in which they combat an actual fire with an appropriate fire extinguisher as a part of training on firefighting equipment. Thus, the notice proposed to allow the training required under § 121.417 to be accomplished in two drills (a PBE drill using simulation and a firefighting drill using an actual fire) or one drill in which the crewmember fights an actual fire while wearing the PBE unit.

Discussion of Comments

The FAA received eight comments, including two late-filed comments, on the proposed rule.

The Association of Professional Flight Attendants (APFA) comments that it supports the action of the notice, i.e., fighting an actual fire as a part of the required drill; however, APFA also believes that the "split drill" is less effective. APFA states that flight attendants who have actually fought cabin fires have expressed a concern that the removal of the PBE from its container was much more difficult and time consuming than they anticipated. APFA recommends that a PBE drill be defined as an emergency drill in which a crewmember demonstrates the proper removal and use of the PBE, and that removal be emphasized in the training.

FAA response: The FAA has issued guidance to Principal Operations Inspectors that they should ensure that their assigned air carriers have FAA approved training courses which replicate the forces necessary to open the pouches. The FAA agrees with APFA's comment and believes that this improvement in training will have the results that the APFA wants.

The Regional Airline Association (RAA) supports the proposal, but objects to the requirement to use a fire extinguisher and PBE unit identical to that installed in the airplane instead of equivalent extinguishers and appropriate PBE training devices. The RAA is concerned that this would mean an additional training drill if a cabin crewmember is reassigned to an airplane that used a different type of fire extinguisher. The Association also urges the FAA to reword the final rule so that substitutes for HALON extinguishers may be used in order to avoid damaging the environment. RAA also proposed that the compliance date be no sooner than 1 year after the effective date.

FAA response: Simulated PBE equipment, i.e., a training hood, is acceptable if it is approved by the principal operations inspector (POI). A training hood must accurately replicate the forces necessary to open the pouch. Some airlines have installed PBE equipment in pouches which are stapled and therefore are difficult to open. When this is the case it is important that the "training" pouch simulate the forces necessary to open the actual equipment.

While it is important that each crewmember operate the fire extinguishers that are installed on the airplane, it is not necessary that installed fire extinguishers be used to actually fight the fire. The intent of the rule is that training programs accomplish the training objectives of having crewmembers know how to use the equipment and experience the psychological aspects of fighting a real fire. The training objective of knowing how to use a fire extinguisher can be met by having each crewmember remove the fire extinguisher from stowage and demonstrate the proper operation. The benefit of experiencing the psychological effect of being faced with an actual fire and having to control it can be met by the use of other extinguishing agents. To incorporate this concept in the amendatory language, definitions for simulation devices for both fire extinguishers and PBE units are added to the definitions section of the amendment.

The FAA acknowledges the comment from RAA indicating that some certificate holders may need additional time to comply with the requirement to fight an actual fire. The FAA will address the problems of those certificate holders on an individual basis.

The Air Transport Association (ATA) likewise urges the use of "training hoods" so that airlines are able to avoid higher costs associated with use of actual PBE units. ATA also notes that the FAA issued policy statements that HALON extinguishers should be avoided. ATA urges that language be added which clearly specifies the use of "other extinguishing agents" for aircraft where HALON extinguishers are used. ATA states that it continues to support United Airlines' petition for exemption to permit the use of simulation alone for the required drill. ATA states that it finds FAA inconsistent in promulgating the Advanced Qualification Program rule, which supports innovation and simulation in training, while at the same time repudiating those goals by requiring a live fire for the PBE drill.

Air Wisconsin also urges the FAA to allow training hoods and states that if carriers are required to use the approved PBE units the cost would be staggering.

An individual physician comments that the reuse of PBE units by different individuals could result in the transmission of disease, particularly hepatitis and tuberculosis. This individual urges instead that the FAA permit the use of training devices to preclude imposing an unnecessary financial burden on airlines.

FAA response: The FAA approves of the use of "training hoods" if they properly simulate the PBE equipment that is installed on the aircraft. The FAA believes that there are many "training hoods" available which do this. Most of the training problems which have been noted have concerned the opening of the pouch which houses the PBE. It is important that crewmembers receive training on the removal of the PBE from the pouch especially when the pouch is stapled and difficult to open.

This final rule allows airlines to use extinguishing materials other than HALON during the actual firefighting portion of the PBE drill. Therefore, incorporating the phrase "other extinguishing agents" is unnecessary.

The FAA does not believe that requiring crewmembers to experience the psychological effects of fighting an actual fire is in conflict with the principles of the Advanced Qualification Program rule. The training objectives of being able to use a fire extinguisher properly and to correctly use PBE are still subject to innovation and simulation. The FAA believes that by allowing the "split drill" it is encouraging the use of creativity in simulation.

The Association of Flight Attendants (AFA) opposes the proposed revision. AFA quotes one attendant who states that the PBE unit makes everything look different and particularly distorts the appearance of the fire. This crewmember found it beneficial to have experienced how the mask would feel, how the fire would look, and how the fire would respond to the extinguisher while wearing the mask. Noting that there are gradations in the sophistication of simulation, AFA urges the FAA to define the quality of the actual and simulated fires. AFA also encourages that, if the split drill is allowed, the FAA require for those carriers that elect to use it—(1) recurrent training every 24 months to reinforce the actual one-time fire experience, and (2) a drill that includes taking the PBE out of the stowed position, donning it, and learning the indications for a low or depleted oxygen supply.

FAA response: One of the reasons that the FAA has decided to allow the split drill is to provide the opportunity for airlines to use simulation and innovation during fire extinguisher training. The agency agrees that distortion occurs and believes that this training will give the flight attendant

experience in many aspects of distortion.

The FAA is aware that there are many types and grades of fires which are appropriate to the fire fighting portion of the PBE drill, and individual POI's are given the responsibility of approving the fire. The quality of fire to be used in this training is contingent on the location of the fire, the airline facilities, and local ordinances. It would be difficult for the FAA to provide guidance which would be appropriate to each situation.

The FAA will continue to monitor the PBE drills and their effectiveness, and, if it believes that further instruction should be provided during recurrent training, it will make this a requirement. The present requirement in § 121.417(b)(2), "individual instruction in the location, function, operation of emergency equipment * * *" should indicate that instruction should be given on PBE during the emergency training portion of an air carrier's approved training program.

In addition, § 121.417(c)(2) requires, "Additional emergency drill requirements to be accomplished during initial training and once each 24 calendar months during recurrent training." This additional training in § 121.417(c)(2)(i)(C) includes "Each type of emergency oxygen system to include protective breathing equipment." This means that a drill must be performed each 24 months which includes the operation of PBE. The FAA agrees with AFA that this drill should include removing the PBE from its stowed position, donning it, and demonstrating knowledge of the low oxygen indicators.

The FAA does not believe it is necessary to expose crewmembers to an actual fire every 24 months.

The Air Line Pilots Association (ALPA) opposes the proposed revision, stating that PBE training should be as realistic as possible, not given an artificial separation by a split drill that will leave crewmembers with incomplete training. ALPA states that the training is incomplete because if a crewmember had to actually fight a cabin fire, he or she would never before have used the PBE and firefighting equipment together.

FAA response: The FAA finds that the training objectives in the use of PBE can be met through either the two separate drills or one combined drill. The training benefits of the simulation are different from the psychological benefit of experiencing an actual fire. For example, locating a fire in a seat cushion, lavatory, or galley would be impracticable to duplicate with an actual fire, but such an experience has a recognized training benefit. In addition, the FAA recognizes that although not all firefighting situations require the use of PBE, they usually require the use of a fire extinguisher. Therefore, the experience of fighting an actual fire with a fire extinguisher has a separate, and intrinsic, benefit.

Finally, one comment was received from a training company, which had no substantive comments on the NPRM.

Intent of the Amendment

Based on its review of current industry practices, Pan Am and United Airlines' petitions for exemption, and letters from AFA, the FAA has reevaluated the requirements of the current regulation and hereby amends the rule. The objective of the current regulation is to train crewmembers on the use of PBE and firefighting equipment available on aircraft in which they are assigned duties. This training includes the activation of PBE and fire extinguishers in fighting an actual fire. Currently, crewmembers are required to meet these training objectives by performing an approved firefighting drill in which they fight an actual fire with an appropriate fire extinguisher while wearing PBE. The FAA has determined, however, that air carriers should be allowed to separate this training into two categories: training on PBE and training on firefighting equipment. The FAA has also determined that simulated fires should be allowed during training on PBE, but that it is essential that crewmembers complete a one-time firefighting drill in which they combat an actual fire with an approved fire extinguisher as a part of training on firefighting equipment.

Under this amendment, air carriers may continue to combine the training on PBE and firefighting equipment training into one drill if an actual fire is used during the training. However, if simulated fires are used during PBE training, each crewmember must complete a separate firefighting drill with an actual fire using a fire extinguisher. Crewmembers would still be required to have knowledge and skill relating to firefighting techniques and the operation and use of PBE, as well as first-hand knowledge of how an actual fire reacts to a fire extinguisher.

General Discussion of the Amendment

Section 121.417

Section 121.417(c)(1)(i) requires crewmembers to combat an actual or simulated fire using at least one type of installed hand fire extinguisher, or approved simulation device, appropriate for the type of fire, while wearing the appropriate type of PBE. This requirement is designated as a PBE drill, and it emphasizes the correct use of PBE in a firefighting scenario. The crewmember performs the drill by using PBE while combatting an actual or simulated fire.

The FAA acknowledges the training benefits of simulation and the various firefighting scenarios that may be enacted when using a simulated fire in combination with a mock-up of an aircraft cabin, galley, oven, lavatory, or passenger seat. In addition to demonstrating proper operation of the emergency firefighting equipment, crewmembers can be trained in proper crew coordination, communication, and decision-making. Many major air carriers currently conduct PBE training in sophisticated cabin trainers that are equipped with various types of devices that simulate smoke and fire. The FAA recognizes that training with simulated fires, in addition to a fire extinguishing drill that includes an actual fire, is beneficial because it allows various aircraft firefighting situations to be created in the environments in which they are likely to take place. The FAA also recognizes that many air carriers may choose not to use simulation. These carriers are then required to have their crewmembers perform the PBE drill using an actual fire, as prescribed by current § 121.417(c)(1)(i). In such a combined drill, crewmembers still demonstrate the proper use of PBE and fight an actual fire using an appropriate type of fire extinguisher wearing PBE.

Section 121.417(c)(1)(ii)

This new paragraph requires air carriers to conduct approved firefighting drills in which crewmembers fight an actual fire using an installed hand fire extinguisher appropriate for the type of fire. The requirement does not apply to crewmembers whose PBE drill under § 121.417(c)(1)(i) is conducted with an actual fire. The FAA acknowledges that the firefighting drill, including an actual fire, is a one-time requirement; therefore, if a crewmember fights an actual fire during the PBE drill, the crewmember need not perform another drill with an actual fire. Furthermore, crewmembers are not required to fight an actual fire in the additional initial or recurrent training drills set forth in current § 121.417(c)(2).

This added section emphasizes the importance of firefighting training that includes a drill in which a crewmember fights an actual fire. The psychological effect of facing an actual fire cannot be achieved through simulation.

The FAA's primary goal in revising these requirements is to clarify and reinforce the present requirement that crewmembers undergo a one-time training drill in which they combat an actual fire. This was stated in the preambles to Amendment No. 121–193 and Amendment 121–220. By permitting air carriers to allow crewmembers to perform the currently required PBE firefighting drill with a simulated fire, the FAA would allow air carriers additional flexibility in providing quality training for various types of situations.

One of AFA's primary concerns is that there are crewmembers working in the industry who have not fought an actual fire in training. This amendment modifies the current requirement by providing an alternative to the current regulation. However, each crewmember would still be required to fight an actual fire in initial training. The FAA recognizes that, although not all firefighting situations require the use of PBE, they usually require the use of a fire extinguisher. Therefore, the FAA believes that the change in the structure of the current regulation enhances firefighting training objectives.

Section 121.417(d)

Section 121.417(d) will require any crewmember who serves in part 121 operations to have completed the PBE drill and the firefighting drill in paragraphs (c)(1)(i) or (c)(1)(ii) by [insert effective date of final rule], the effective date of this amendment. The FAA has determined that this will allow sufficient time for carriers to determine which crewmembers have completed the training as prescribed by this amendment. If it has not been given in initial training it will be necessary for the air carrier to give that training in recurrent training sessions or in specially scheduled sessions. It will be necessary for air carriers to schedule sessions efficiently.

This section also contains a provision that would credit crewmembers who have performed the PBE and firefighting drills described in paragraphs (c)(1)(i) and (c)(1)(ii) with meeting the requirements of the regulation if the firefighting training and PBE training was performed after May 26, 1987. However, to receive credit, the carrier must present to the Director of Flight Standards Service information or documentation showing that the crewmember accomplished firefighting training in a manner that would meet the requirements of the amendment.

The May 26, 1987, date corresponds to the date of issuance of Amendment No. 121–193. The FAA believes that it is not feasible for credit to be given for firefighting drills performed prior to May 26, 1987, because requirements for firefighting drills involving an actual fire, simulated fire, or PBE training did not exist in the FAR prior to that date.

Section 121.417(f)

This final rule amends § 121.417(f) by defining the terms "actual fire," "approved fire extinguisher," "approved PBE simulation device," "observe," "perform," "simulated fire," "combats," and "PBE drill" to this section. For the purposes of this final rule, "actual fire" means an ignited combustible material, in controlled conditions, of a sufficient magnitude and duration to accomplish the training objectives outlined in paragraphs (c)(1)(i) and (c)(1)(ii) of the rule. The FAA is not requiring exact dimensions and types of materials to be used for actual fires in the firefighting drills. To do so would mean that crewmembers might have to be retrained because their previous training might not meet these specific requirements. This additional training could impose an additional cost on air carriers.

A review of current industry practice shows that air carriers frequently contact local or airport fire departments prior to conducting any type of firefighting training, and, in some cases, fire department personnel are present during training. Many local fire departments provide training course outlines on the use of small, hand fire extinguishers, and they also typically provide training on the operation of hand fire extinguishers to employees of local businesses and organizations. These employees are given the opportunity to extinguish an actual fire under fire department supervision.

Among the materials used by fire departments and air carriers in creating actual fires are kerosene or diesel fuel floating on water in a metal pan or drum. These types of fires are ignited outdoors in an open area. Some air carriers and fire departments have constructed indoor fire rooms or fire pits in which they ignite materials such as seat cushions and use exhaust fans to eliminate smoke.

The amendment defines a "simulated fire" as an artificial duplication of a fire used to create the various firefighting situations that could occur on an aircraft. Smoke simulation is a component of that fire simulation. Artificial smoke may be used to simulate smoke coming from a galley oven, under a lavatory door, or under a passenger seat.

Under the amendment, "combats," used in this context, means fighting an actual or simulated fire until such fire is extinguished. In the case of a simulated fire, extinguishment would be determined by the instructor.

The amendment defines "PBE drill" as an emergency drill in which a crewmember demonstrates the proper use of protective breathing equipment while fighting an actual or simulated fire.

The FAA plans to issue an AC or Operations Bulletin providing additional detailed guidance on the use of PBE, actual fires, and adequate simulation of a fire. The guidance will be based on industry practices that experience has shown to be adequate.

Section 121.417(c)(1)(iii)

Section 121.417(c)(1)(ii) is redesignated as § 121.417(c)(1)(iii). The emergency evacuation drill requirements listed in this section would remain unchanged.

Paperwork Reduction Act

Information collection requirements for part 121 have been previously approved by the Office of Management and Budget (OMB) under the provisions of the Paperwork Reduction Act of 1980 (Pub. L. 96–511) and have been assigned OMB Control Numbers as follows: for Part 121, OMB Control Number 2120–0008.

Regulatory Evaluation Summary

This rule is not a major rule under Executive Order 12291 but is a significant rule under the Department of Transportation Regulatory Policies and Procedures. The rule will impose no costs on society (aviation industry, public, or government). Also, no quantifiable benefits are derived from the rule.

The rule will impose no costs because it prescribes neither additional constraints nor requirements on the airlines. The amendment simply responds to requests by the industry for clarification of PBE requirements. This rule will allow Part 121 carriers to choose between two options to meet firefighting training requirements. The rule makes clear that either of the two options is sufficient to comply with the FAR. Airlines may choose the least costly of these options.

Although the amendment will not place additional requirements on Part 121 operators, it ensures that each crewmember combats an actual fire in addition to or in combination with a PBE drill without additional requirements. Hence, the FAA considers this a cost beneficial rule.

International Trade Impact Analysis

This rule will have no effect on the sale of foreign products or services in the United States. The rule also does not affect the sale of United States products or services in foreign countries. Hence, all foreign and domestic trade will be equally unaffected by this rule.

Regulatory Flexibility Act Determination

The Regulatory Flexibility Act of 1980 (RFA) ensures that government regulations do not needlessly and disproportionately burden small businesses. The RFA requires the FAA to review each rule that may have a significant economic impact on a substantial number of small entities. This amendment will not impose additional costs at all. Hence, the rule will not impose a significant cost on a substantial number of small entities.

Objectives of and Legal Basis of the Rule

The objective of the amendment, which is discussed in detail in the preamble to this regulation, is to provide an increased margin of safety against the hazards of in-flight fires. The legal basis of the proposal comes from sections 313(a), (314)(a), 601 through 610, and 1102 of the Federal Aviation Act of 1958, as amended (49 U.S.C App 1354(a), 1355, 1356, 1357, 1401, 1421 through 1430, 1472, 1485, and 1502); 49 U.S.C. 106(g) (Revised Public Law 97–449, January 12, 1983).

Good Cause Justification for Immediate Effective Date

This amendment is being made effective immediately because delay could have an immediate impact on training of crewmembers and ultimately upon passenger service in the air carrier industry.

Accordingly, I find that good cause exists for making this final rule effective immediately.

Federalism Implications

The amendment will not have substantial direct effect on the States, on the relationship between the national government and the States, or on the distribution of power and responsibilities among the various levels of government. Therefore, in accordance with Executive Order 12612, it is determined that this final rule will not have sufficient federalism implications to warrant the preparation of Federalism Assessment.

Conclusion

For the reasons discussed in the preamble, and based on findings in the Regulatory Flexibility Determination and the International Trade Impact Analysis, the FAA has determined that this regulation is not major under Executive Order 12291. In addition, the FAA certifies that this amendment will not have a significant economic impact on a substantial number of small entities under the criteria of the RFA. This amendment is considered significant under DOT Regulatory Policies and Procedures (44 FR 11034; February 26, 1979). A final regulatory evaluation of the amendment was not prepared since it was determined that the rule will impose no costs on society.

List of Subjects in 14 CFR Part 121

Aviation safety, Air carriers, Aircraft, Transportation, Airmen, Federal Aviation Administration, Reporting and record keeping requirements, Safety.

The Amendment

In consideration of the foregoing, the Federal Aviation Administration amends parts 121 of the Federal Aviation Regulations (14 CFR part 121) as follows:

PART 121—CERTIFICATION AND OPERATIONS: DOMESTIC, FLAG, AND AIR CARRIERS AND COMMERCIAL OPERATORS OF LARGE AIRCRAFT

1. The authority citation for part 121 continues to read as follows:

Authority: 49 U.S.C. App 1354(a), 1355, 1356, 1357, 1401, 1421–1430, 1472, 1485, and 1502; 49 U.S.C. 106(g) (Revised Pub. L. 97–449, January 12, 1983).

2. Section 121.417 is amended by revising paragraphs (c)(1)(i), (d), and (f), redesignating current paragraph (c)(1)(ii) as (c)(1)(iii) and adding a new paragraph (c)(1)(ii) to read as follows:

§ 121.417 Crewmember emergency training.

* * * * *

(c) * * *

(1) * * *

(i) At least one approved protective breathing equipment (PBE) drill in which the crewmember combats an actual or simulated fire using at least one type of installed hand fire extinguisher or approved fire extinguisher that is appropriate for the type of actual fire or simulated fire to be fought while using the type of installed PBE required by § 121.337 or approved PBE simulation device as defined by paragraph (d) of this section for combatting fires aboard airplanes;

(ii) At least one approved firefighting drill in which the crewmember combats an actual fire using at least one type of installed hand fire extinguisher or approved fire extinguisher that is appropriate for the type of fire to be fought. This firefighting drill is not required if the crewmember performs the PBE drill of paragraph (c)(1)(i) by combating an actual fire; and

* * * * *

(d) After September 1, 1993, no crewmember may serve in operations under this part unless that crewmember has performed the PBE drill and the firefighting drill described by paragraphs (c)(1)(i) and (c)(1)(ii) of this section, as part of a one-time training requirement of paragraphs (c)(1) or (c)(2) of this section as appropriate. Any crewmember who performs the PBE drill and the firefighting drill prescribed in paragraphs (c)(1)(i) and (c)(1)(ii) of this section after May 26, 1987, is deemed to be in compliance with this regulation upon presentation of information or documentation, in a form and manner acceptable to the Director, Flight Standards Service, showing that the appropriate drills have been accomplished.

* * * * *

(f) For the purposes of this section the following definitions apply:

(1) *Actual fire* means an ignited combustible material, in controlled conditions, of sufficient magnitude and duration to accomplish the training objectives outlined in paragraphs (c)(1)(i) and (c)(1)(ii) of this section.

(2) *Approved fire extinguisher* means a training device that has been approved by the Administrator for use in meeting the training requirements of § 121.417(c).

(3) *Approved PBE simulation device* means a training device that has been approved by the Administrator for use in meeting the training requirements of § 121.417(c).

(4) *Combats*, in this context, means to properly fight an actual or simulated fire using an appropriate type of fire extinguisher until that fire is extinguished.

(5) *Observe* means to watch without participating actively in the drill.

(6) *PBE drill* means an emergency drill in which a crewmember demonstrates the proper use of protective breathing equipment while fighting an actual or simulated fire.

(7) *Perform* means to satisfactorily accomplish a prescribed emergency drill using established procedures that stress the skill of the persons involved in the drill.

(8) *Simulated fire* means an artificial duplication of smoke or flame used to create various aircraft firefighting scenarios, such as lavatory, galley oven, and aircraft seat fires.

Issued in Washington, DC, on August 26, 1993.

David R. Hinson,

Administrator.

[FR Doc. 93–21280 Filed 8–27–93; 2:18 pm]

BILLING CODE 4910–13–M

federal register

Wednesday
September 1, 1993

Part IV

Environmental Protection Agency

40 CFR Part 80

Approval of South Carolina's Petition to Relax the Federal Reid Vapor Pressure Volatility Standard for South Carolina; Final Rule

ENVIRONMENTAL PROTECTION AGENCY

40 CFR Part 80

[FRL–4702–9]

Approval of South Carolina's Petition to Relax the Federal Reid Vapor Pressure Volatility Standard for South Carolina From 7.8 psi to 9.0 psi

AGENCY: Environmental Protection Agency (EPA).

ACTION: Direct final rule.

SUMMARY: In this document EPA is approving as a direct final rule the State of South Carolina's petition to relax the Reid Vapor Pressure Standard (RVP) applicable to gasoline introduced into commerce from June 1 to September 15 in the former Cherokee County ozone nonattainment area from 7.8 pounds per square inch (psi) to 9.0 psi. South Carolina's petition is based on evidence that the Cherokee County area does not need the 7.8 psi standard to maintain ozone attainment. Cherokee County and the State of South Carolina have met the requirements for redesignation from nonattainment to attainment status contained in section 107(d)(3)(E) of the Clean Air Act as amended (the Act) and EPA has redesignated Cherokee County as a result. EPA believes that further imposition of the 7.8 psi volatility standard would impose needless costs in light of South Carolina's attainment of the National Ambient Air Quality Standard (NAAQS) for ozone and completion of an EPA approved ozone maintenance plan that demonstrates ozone attainment for the next 10 years with 9.0 psi gasoline. This action is being taken without prior proposal because EPA believes that this final rulemaking is noncontroversial, for the reasons discussed above and because of the limited scope of this rulemaking.

DATES: This action will be effective on November 1, 1993, unless notice is received by October 1, 1993, that someone wishes to submit adverse or critical comments. If notice of intention to submit adverse comments is received and the effective date is delayed, timely notice withdrawing this action will be published in the **Federal Register**. Please direct all correspondence to the addresses shown below.

ADDRESSES: Materials relevant to this rulemaking have been placed in Docket (A–93–24) by EPA. The docket is located at the Air Docket Section (LE–131), U.S. Environmental Protection Agency, 401 M Street SW., Washington, DC 20460, in room M–1500 Waterside Mall may be inspected from 8:30 a.m. to 12:00 p.m. and from 1:30 p.m. to 3:30 p.m. Monday through Friday. A reasonable fee may be charged for copying docket material.

Comments or notice of intent to submit adverse or critical comments should be submitted (in duplicate if possible) to the Air Docket Section at the above address. A copy should also be sent to Mr. Michael Ball at the EPA address listed below: U.S. Environmental Protection Agency, Office of Air and Radiation, 401 M Street, SW. (6406–J), Washington, DC 20460.

FOR FURTHER INFORMATION CONTACT: Michael Ball of the Regional/State/Local Coordination Section (202) 233–9005 and at the above address.

SUPPLEMENTARY INFORMATION:

I. Introduction

This notice describes EPA's action to approve as a direct final rule South Carolina's request to change the federal Reid Vapor Pressure (RVP) standard of 7.8 psi to 9.0 psi in the Cherokee former ozone nonattainment area from June 1 to September 15. The remainder of this notice is divided into five parts. Section II provides the background for this action. Section III provides the Agency's policy regarding relaxation of volatility standards in nonattainment areas redesignated as attainment. Section IV reviews the South Carolina request and supporting evidence. Section V reviews EPA's redesignation of Cherokee County as attainment. Finally, Section VI presents EPA's action and rationale.

II. Background

On August 19, 1987, EPA proposed a two-phase national program to reduce summertime gasoline volatility [1]. EPA had found that gasoline had become increasingly volatile, which caused an increase in evaporative emissions from gasoline-powered sources. These emissions are referred to as volatile organic compounds (VOC), a precursor for ozone. These gasoline-related VOC emissions are currently a major contributor to the nation's serious ground level ozone problem, which harms human health and the public welfare. The Agency published a notice of final rulemaking on March 22, 1989 that promulgated Phase I of the program to require VOC reductions that were available through refining changes that could be accomplished by the beginning of the 1989 summer ozone season, when they went into effect [2]. The Phase II volatility standards were finalized on June 11, 1990 [3]. These volatility standards went into effect May 1, 1992.

The final rule for the Phase I program established a federal volatility standard in South Carolina of (10.5) psi for the month of May, and 9.5 for June through September 15. The Phase II rule required a further reduction in the volatility standard to 9.0 psi for May and 7.8 psi for June 1 through September 15 beginning in 1992. The Phase I and Phase II standards were applicable on a statewide basis.

Congress established somewhat different requirements for the fuel volatility program in the Clean Air Act Amendments of 1990. Section 211(h)(1) of the Act, as amended, required that EPA promulgate regulations making it unlawful nationwide to sell, offer for sale, dispense, supply, offer for supply, transport, or introduce into commerce, gasoline with an RVP level in excess of 9.0 psi during the high ozone season as defined by the Administrator. It further provides that EPA shall establish more stringent RVP standards in nonattainment areas if EPA finds such standards are "necessary to achieve comparable evaporative emissions reductions, on a per vehicle basis, in such areas, taking into consideration the enforceability of such standards, the need of an area for emission control, and economic factors." Section 211(h) prohibits the regulations from establishing a volatility standard more stringent than 9.0 psi in an attainment area, except that it allows EPA to impose a lower standard in any former ozone nonattainment area which is redesignated to attainment.

On May 29, 1991, EPA published a Notice of Proposed Rulemaking that proposed to modify the Phase II summer ozone volatility standards to reflect new section 211(h) of the Act.[4] In this notice, EPA proposed that the RVP standard be 9.0 psi in all attainment areas where that standard was not already in place beginning in 1992. The effect of this proposal was to prohibit the sale of gasoline with a Reid Vapor Pressure above 9.0 psi during the summer ozone season in all areas designated attainment for ozone for 1992 and beyond. For areas that have been designated as nonattainment, EPA proposed that the original Phase II standards published on June 11, 1990 should not be changed. On December 12, 1991 EPA finalized these modifications.[5]

On November 6, 1991, EPA issued its ozone nonattainment designations in

[1] 52 FR 31274 (August 16, 1987).

[2] 54 FR 11868 (March 22, 1989).

[3] 54 FR 23658 (June 11, 1990).

[4] 56 FR 24242 (May 29, 1991).

[5] 56 FR 64704 (December 12, 1991).

the **Federal Register** pursuant to section 107(d)(1)(C) of the Act, as amended. In the November 6, 1991 notice, EPA designated Cherokee County, South Carolina as a "marginal" nonattainment area. Under the original Phase II volatility rule, a statewide standard was established in South Carolina that required 7.8 psi gasoline to be provided from June 1 to September 15. The modifications to the Phase II rule finalized on December 12, 1991, pursuant to section 211(h) of the Act as amended require that areas in South Carolina that were designated as nonattainment in the November 6, 1991 notice be provided with 7.8 psi gasoline. For all other areas of South Carolina the applicable standard was revised to 9.0 psi from May 1 to September 15.

III. EPA Policy Regarding Relaxation of Volatility Standards in Nonattainment Areas Redesignated as Attainment

Under the amended Phase II regulations, any change in the volatility standard for an area must be accomplished through a separate rulemaking revising the applicable standard for that area, even for an area that was designated as nonattainment in the November 6, 1991 notice but is subsequently redesignated as being in attainment.[6] Thus, for nonattainment areas where EPA mandated a Phase II volatility standard of 7.8 psi RVP in the December 12, 1991 rulemaking, the 7.8 psi standard will remain in effect, even after such an area is redesignated as being in attainment, until a separate rulemaking is completed that revises the RVP standard in that area from 7.8 psi to 9.0 psi.[7]

The Agency believes that relaxation of any RVP standard change is best accomplished in conjunction with the redesignation process. In order for an ozone nonattainment area to be redesignated as being in attainment for ozone, revised section 107(d)(3) of the Act requires the state to make a showing, pursuant to section 175A of the Act, that the area is capable of maintaining attainment for the ozone NAAQS for ten years. This maintenance plan may demonstrate that the area is capable of maintaining attainment for ten years without the more stringent volatility standard. However, the maintenance plan could also show that the more stringent volatility standard is or may be necessary for the area to maintain its attainment with the ozone NAAQS. Therefore, in the context of a request for redesignation, the Agency will not relax the volatility standard unless the maintenance plan demonstrates to the satisfaction of the Agency that the area will maintain attainment for ten years without the need for the more stringent volatility standard.[8]

IV. South Carolina's Petition and Maintenance Plan

On July 20, 1992, Mr. R. Lewis Shaw, South Carolina Deputy Commissioner for Environmental Quality Control, acting as the representative for South Carolina Governor Carroll Campbell, petitioned EPA to redesignate Cherokee County to attainment for ozone, and permanently relax the Federal RVP standard from 7.8 psi to 9.0 psi for the months of June through September 15 for the years 1994 and beyond. This request was based on three years (1989, 1990, 1991) of quality assured monitoring data that showed that Cherokee County had not violated the NAAQS for ozone[9] and on the South Carolina Department of Health and Environmental Control's (DHEC) "Cherokee County Attainment Demonstration and Ten-Year Maintenance Plan" which was included within the petition to redesignate and relax the RVP standard for Cherokee County. This document was submitted to fulfill the requirements for both redesignation and relaxing the RVP standard.

In the petition the state cited reasons for justifying a permanent relaxation of the RVP standard. DHEC submitted air quality data for Cherokee County that demonstrated that Cherokee County had attained the ozone NAAQS for the three-year period extending from 1989–1991, during which time the RVP standard for gasoline during the summer months was 9.5 psi. During that period, there were no exceedances, and hence, no violations of the ozone standard. In addition, the maintenance plan stated that Federal Motor Vehicle Control Program (FMVCP) requirements for lower tailpipe standards have further reduced emissions in Cherokee County.

DHEC further asserted that as a small, rural county, and as South Carolina's only ozone nonattainment area, the 7.8 RVP requirement has been very disruptive in that gasoline distributors have been reluctant to stock this gasoline for such a small market. DHEC claims that distributors will not deliver the 7.8 psi RVP gasoline in quantities less than a full 7,000-gallon tank truck load. DHEC contends that this has caused gasoline marketers to be charged a higher cost for distribution. This has created a burden for small businesses without the necessary storage capacity.

The Cherokee County maintenance plan includes a requirement to assess growth factors on a triennial basis with the contingency to assess on a yearly basis if the projection inventory is exceeded by 10% or more. The projection inventory reflects both the allowable emission rate, as well as the expected emission rate and expected actual production or activity level. The plan contains a contingency to implement additional control measures such as Control Technique Guidelines (CTG) categories within nine (9) months should the area violate the ozone NAAQS. South Carolina has utilized a 9.0 psi RVP in its maintenance plan to demonstrate long-term attainment of the ozone NAAQS without the use of the 7.8 psi RVP standard required in EPA's RVP final regulations.[10]

V. EPA Approval of the Cherokee County Maintenance Plan and Redesignation

On December 15, 1992, EPA announced a direct final rule in the **Federal Register** that approved the maintenance plan and redesignation of Cherokee County, South Carolina, to attainment for ozone.[11] In this rulemaking, EPA's Regional Administrator for Region IV determined that the State has met and fulfilled the requirements for redesignation contained in section 107(d)(3)(E) of the Clean Air Act Amendments of 1990.

Included in that determination were findings that the area had attained the NAAQS for ozone, that the improvements in air quality were due to permanent and enforceable emission

[6] Relaxation of RVP standards associated with the redesignation process was discussed in the preamble to EPA's final rule modifying the Phase II volatility standards (56 FR 64706, December 12, 1991).

[7] Similarly, when an area originally designated being in attainment is redesignated nonattainment, the volatility level of the gasoline will stay at 9.0 psi RVP unless and until EPA promulgates a rulemaking changing the RVP in that area (56 FR 64706, December 12, 1991).

[8] As stated in the preamble for the Agency's initial Phase II volatility standards (see 55 FR 23609), and in the preamble in the proposal to revise those standards (56 FR 24244), EPA may also promulgate a rule to revise the volatility standard in a particular nonattainment area in order to enhance local air quality and/or increase the economic efficiency of the program. The Governor of a state, or his designee, may petition EPA for a less stringent standard if such a standard is consistent with the requirements of the Act and if the state can document: (1) Particular local economic impact that makes the less stringent standard appropriate and (2) sufficient alternative programs to achieve attainment and maintenance of the NAAQS for ozone.

[9] The Federal standard for RVP in Cherokee County from 1989–1991 was 9.5 psi. As required for nonattainment areas in the Southeast an RVP of 7.8 psi went into effect for Cherokee County on June 1, 1992.

[10] 56 FR 64706 (December 12, 1992).

[11] 57 FR 59300 (December 15, 1992).

reductions, and that the Administrator has fully approved a maintenance plan for the area as meeting the requirements of section 175A of the Act.

The finding that the area had attained the NAAQS for ozone was based on the data indicating that Cherokee County had no violations in 1989, 1990 and 1991. The finding that permanent enforceable VOC emissions reductions have been obtained was based on evidence that the FMVCP had reduced emissions in Cherokee County and that federal requirements to reduce gasoline RVP had gone into effect in 1989.

In finding that the maintenance plan meets the requirements of section 175A, EPA cited the elements of the plan discussed above. EPA noted that the plan relied on a gasoline volatility level of 9.0 psi RVP, not 7.8 psi, as is required under current regulations. However, the final rule found that Cherokee County had demonstrated that it can maintain the ozone NAAQS using the less stringent volatility level of 9.0 psi RVP. On that basis, the maintenance plan was approved. No comments were received subsequently and the redesignation of Cherokee County to attainment for ozone became effective on February 16, 1993.

VI. EPA's Final Action

Beginning on the effective date of this rule, EPA is today relaxing the RVP standard for Cherokee County, South Carolina from 7.8 psi to 9.0 psi between June 1 and September 15 for the years 1994 and beyond. South Carolina has met the criteria for relaxation of the RVP standard discussed in the December 12, 1991 notice. The State has in place a fully approved implementation plan for Cherokee County that demonstrates that the county can maintain the ozone NAAQS without the 7.8 psi standard.

South Carolina's approved implementation and maintenance plan does not require a RVP standard more stringent than 9.0 psi. EPA's approval of this plan was based on evidence that the Cherokee County area does not need the 7.8 psi standard to maintain ozone attainment. Based upon the approval of the maintenance plan, which demonstrates attainment and maintenance of the ozone NAAQS standard for 10 years with a 9.0 psi RVP standard for gasoline, EPA believes sufficient alternative programs are in place to achieve attainment and maintenance of the ozone NAAQS and that further imposition of the 7.8 psi volatility standard would impose needless costs.[12]

This action is being taken without prior proposal because EPA believes that this relaxation in the RVP regulation is noncontroversial; the effect of this rulemaking is limited to Cherokee County, South Carolina; and EPA anticipates no significant comments on this action. Today's action is based on the same information that EPA relied on in its approval of South Carolina's maintenance plan. EPA noted specifically in its December 15, 1992 **Federal Register** notice that it intended to relax the volatility standard in Cherokee County to 9.0 psi in the near future. EPA received no adverse comments regarding its approval of the maintenance plan or the redesignation of Cherokee County to attainment. Further imposition of the 7.8 psi RVP standard would impose needless costs in light of Cherokee County's attainment and maintenance of the ozone NAAQS utilizing 9.0 psi RVP gasoline.

The public should be advised that this action will be effective 60 days from the date of this **Federal Register** notice, unless notice is received within 30 days that someone wishes to submit adverse or critical comments. If such notice is received, this action will be withdrawn and two subsequent notices will be published. One notice, which will be published before the effective date, will withdraw the final action. Another notice will begin a new rulemaking by announcing a proposal of the action and establishing a comment period. Interested persons are invited to submit comments on this proposed approval. EPA will consider all comments received within thirty days of the publication of this notice.

Consequently, this procedure still allows the opportunity for public comment and opportunity for oral presentation of data that is required under CAA section 307(d). This procedure merely provides an expedited procedure for final action where a rulemaking is not expected to be controversial and no adverse comment is expected.

VII. Environmental Impact

The amendment is not expected to cause Cherokee county to violate the NAAQS for ozone. The Cherokee County nonattainment area has met the NAAQS since 1989. That is, Cherokee County, has not recorded an exceedance during the time when the RVP standard in Cherokee county was no more stringent than 9.0 psi.

VIII. Economic Impact

The relaxation of the 7.8 psi standard to 9.0 psi will result in a cost savings to consumers of approximately 1.1 cents per gallon at the pump.

IX. Administrative Requirements

Pursuant to the Regulatory Flexibility Act, 5 U.S.C. 601 through 612, whenever an agency is required to publish a general notice of rulemaking for any proposed or final rule, it must prepare and make available for public comment a regulatory flexibility analysis which describes the impact of the rule on small entities (i.e., small businesses, small organizations and small governmental jurisdictions). The Administrator may certify, however, that the rule will not have a significant impact on a substantial number of small entities. In such circumstances, a regulatory flexibility analysis is not required.

Under Section 605 of the Regulatory Flexibility Act, I certify that these regulations will not have a significant impact on a substantial number of small entities. The regulatory revision is limited to the Cherokee County area and should have no significant economic impact on a substantial number of small entities. These regulations, therefore, do not require a regulatory flexibility analysis.

Under Executive Order 12291, EPA must judge whether a regulation is "major" and therefore subject to the requirement that a Regulatory Impact Analysis be prepared. Major regulations have an annual effect on the economy in excess of $100 million, have a significant adverse impact on competition, investment, employment or innovation, or result in a major price increase. This final action in the rulemaking package does not constitute a major rule according to the established criteria. In fact, as discussed above, this action will reduce the cost of compliance with Federal requirements in this area. Therefore, I have determined that this proposal does not constitute a "major" rule.

This regulation was submitted to the Office of Management and Budget (OMB) for review as required by Executive Order 12291. OMB had no comments and concurred on this rulemaking.

Under the Paperwork Reduction Act of 1980, 44 U.S.C. 3501, EPA must obtain OMB clearance for any activity that will involve collecting substantially the same information from 10 or more non-Federal respondents. This direct

[12] In the May 29, 1991 notice proposing to modify the Phase II volatility standards, EPA estimated that the 7.8 psi standard will increase the cost of gasoline by approximately 1.1 cents per gallon over the 9.0 psi standard. In addition, as noted above, South Carolina states that special circumstances in Cherokee County may create an added burden for businesses in that area.

final rule does not create any new information requirements or contain any new information collection activities.

The statutory authority for the action in this notice today is granted to EPA by Sections 114, 211, 301(a), and 307 of the Clean Air Act as amended (42 USC 7414, 7545, 7601(a), and 7607).

List of Subjects in 40 CFR Part 80

Administrative practice and procedures, Air pollution control, Environmental protection, Motor vehicle and motor vehicle engines, Fuel additives, Gasoline, Motor vehicle pollution, Penalties, Reporting and recordkeeping requirements.

Dated: August 25, 1993.

Carol M. Browner,

Administrator.

For the reasons set forth in the preamble, part 80 of title 40 of the Code of Federal Regulations is amended as follows:

PART 80—REGULATION OF FUELS AND FUEL ADDITIVES

1. The authority citation for part 80 continues to read as follows:

Authority: Sections 114, 211, and 301(a) of the Clean Air Act as amended, 42 USC 7414, 7545 and 7601(a).

2. Section 80.27 is amended by revising the entry for "South Carolina" to the table in paragraph (a)(2) and by redesignating the footnote reference following "Colorado" and the second footnote 1 at the end of the table as footnote 2 to read as follows:

§ 80.27 Controls and prohibitions on gasoline volatility.

(a) * * *

APPLICABLE STANDARDS[1] 1992 AND SUBSEQUENT YEARS

State	May	June	July	August	September
* * * * * * *					
South Carolina[3]	9.0	9.0	9.0	9.0	9.0
* * * * * * *					

[1] Standards are expressed in pounds per square inch (psi)

[2] * * *

[3] The standard for nonattainment areas in South Carolina from June 1 until September 15 in 1992 and 1993 was 7.8 psi.

[FR Doc. 93–21251 Filed 8–31–93; 8:45 am]

BILLING CODE 6560–01–P

federal register

Wednesday
September 1, 1993

Part V

Department of Health and Human Services

Food and Drug Administration

21 CFR Parts 804 and 807
Medical Devices; Medical Device Distributor Reporting; Final Rules

DEPARTMENT OF HEALTH AND HUMAN SERVICES

Food and Drug Administration

21 CFR Parts 804 and 807

[Docket No. 91N–0295]

Medical Devices; Medical Device Distributor Reporting; Opportunity for Comments

AGENCY: Food and Drug Administration, HHS.

ACTION: Final rule; opportunity for comments.

SUMMARY: The Food and Drug Administration (FDA) is announcing an opportunity for public comments on the final rule on medical device distributor reporting, which is published elsewhere in this issue of the **Federal Register**. The medical device distributor reporting tentative final rule became final on May 28, 1992, by operation of the Safe Medical Devices Act of 1990 (the SMDA), as amended by the Medical Device Amendments of 1992 (the 1992 amendments). Although not required to do so, FDA realizes that there may be issues not previously considered, such as technical issues on specific provisions, and therefore is providing this additional time for comment. If changes are warranted by comments, FDA will make further changes in the rules.

DATES: Written comments by October 1, 1993.

ADDRESSES: Submit written comments to the Dockets Management Branch (HFA–305), Food and Drug Administration, rm. 1–23, 12420 Parklawn Dr., Rockville, MD 20857.

FOR FURTHER INFORMATION CONTACT: Joseph M. Sheehan, Center for Devices and Radiological Health (HFZ–84), Food and Drug Administration, 2098 Gaither Rd., Rockville, MD 20850, 594–4765.

SUPPLEMENTARY INFORMATION: The SMDA of 1990 (Pub. L. 101–629), which became law on November 28, 1990, included provisions requiring FDA rulemaking to implement distributor reporting requirements. The 1992 amendments (Pub. L. 102–300), which amended certain distributor reporting requirements in the SMDA, became effective on June 16, 1992. Pursuant to the provisions of the SMDA, the regulatory provision relating to distributor reporting in the November 26, 1991, tentative final rule became final by operation of the statute on May 28, 1992. These regulatory provisions were subsequently amended on June 16, 1993, by operation of certain provisions in the 1992 amendments. The final rule on distributor reporting published elsewhere in this issue of the **Federal Register** explains the distributor reporting and statutory deadline provisions in more detail.

FDA has already provided opportunities for public comment on the proposal that preceded the rule published today as required by the Administrative Procedure Act. FDA is issuing a final rule based on consideration of these comments to the November 26, 1991, proposed tentative final rule in the near future. Until that time, the rule that is published elsewhere in this issue of the **Federal Register** will govern the reporting requirements for distributors. Although FDA is allowing additional comments on this rule, this action is in no way required by the Administrative Procedure Act. FDA is not interested in receiving comments that it has already received and considered. Although the agency does not believe that any public purpose would be served by reopening for further comment at this time the issues already addressed in the final rule being published, FDA recognizes that in any rulemaking there may be technical issues involving specific provisions that have not been considered. Therefore, the agency is providing 30 days for comment on this final rule on such issues. Comments should be identified with the docket number found in brackets in the heading of this document. FDA will publish additional changes in the final rule if comments bring to FDA's attention an issue, not already considered, that warrants revision.

Under 21 CFR 10.40(e), an opportunity for comment on this final rule is being provided. Interested persons may, on or before October 1, 1993, submit to the Dockets Management Branch (address above) written comments regarding this final rule. Two copies of any comments are to be submitted, except that individuals may submit one copy. Comments are to be identified with the docket number found in brackets in the heading of this document. Received comments may be seen in the office above between 9 a.m. and 4 p.m., Monday through Friday.

This document is issued under the authority of the Federal Food, Drug, and Cosmetic Act (21 U.S.C. 352, 360, 360i, 360j, 371, and 374) and under authority delegated to the Commissioner of Food and Drugs.

Dated: August 25, 1993.

Michael R. Taylor,

Deputy Commissioner for Policy.

[FR Doc. 93–21185 Filed 8–31–93; 8:45 am]

BILLING CODE 4160–01–F

[Docket No. 91N–0295]

21 CFR Parts 804 and 807

Medical Devices; Medical Device Distributor Reporting

AGENCY: Food and Drug Administration, HHS.

ACTION: Final rule; notification of status under the Safe Medical Devices Act; confirmation of effective date.

SUMMARY: The Food and Drug Administration (FDA) is announcing that the tentative final rule on medical device distributor reporting that appeared in the **Federal Register** of November 26, 1991 (56 FR 60024), is now a final rule by operation of law. This final rule requires distributors to submit reports to FDA and to manufacturers, of deaths, serious illnesses, and serious injuries related to medical devices and to submit reports to manufacturers of certain malfunctions that may cause a death, serious illness, or serious injury, if the malfunction were to recur. The final rule also changes the reporting standard for certain distributors that are importers, and changes the definition of the term "serious injury" to conform to a recent statutory amendment. In issuing this final rule, FDA is announcing that the tentative final rule relating to adverse event reporting requirements for distributors, including importers, has the status of a final rule, as of May 28, 1992, by operation of law under the Safe Medical Devices Act of 1990 (the SMDA), as amended by the Medical Device Amendments of 1992 (the 1992 amendments), and is setting forth the regulations reflecting those requirements. FDA is also amending the regulations, based on consideration of comments on the November 26, 1991, tentative final rule, to require distributors to register their facilities and to list their devices with FDA.

DATES: Part 804 is effective May 28, 1992; the amendments to part 807 are effective October 1, 1993.

FOR FURTHER INFORMATION CONTACT: Chester T. Reynolds, Center for Devices and Radiological Health (HFZ–306), Food and Drug Administration, 1390 Piccard Dr., Rockville, MD 20850, 301–594–1156.

SUPPLEMENTARY INFORMATION:

I. Background

The current regulatory framework for medical device reporting requirements is the result of four statutes:

(1) The Federal Food, Drug, and Cosmetic Act of 1938 (21 U.S.C. 321–394) (the act);

(2) The Medical Device Amendments of 1976 (Pub. L. 94–295) (the 1976 amendments), which amended the act to establish the first comprehensive framework for the regulation of medical devices;

(3) The SMDA (Pub. L. 101–629), which amended the act to correct noted problems with the implementation and enforcement of the 1976 amendments; and

(4) The Medical Device Amendments of 1992 (Pub. L. 102–300) (the 1992 amendments), which amended certain provisions of the act relating to devices.

Section 519 of the act (21 U.S.C. 360i), as added by the 1976 amendments, authorized FDA to issue regulations to require manufacturers, importers, and distributors to maintain such records, make such reports, and provide such information to FDA as may reasonably be necessary to ensure that devices are not adulterated or misbranded and are otherwise safe and effective for human use. The legislative history of the 1976 amendments reflects clear congressional intent to permit FDA to require, under the authority of section 519 of the act, device manufacturers, importers, and distributors to report to FDA product defects and adverse effects of the firms' devices. (See H. Rept. 853, 94th Cong., 2d sess. 23 (1976).) Among other things, section 519 of the act states that any reporting requirement established under the authority of that section: (1) May not be unduly burdensome (considering the cost of compliance and the need for the requirement); (2) shall state the purpose for any required report or information and identify to the fullest extent practicable such report or information; (3) may not, except in certain circumstances, require the disclosure of a patient's identity; and (4) may not, except in certain circumstances, require the manufacturer, distributor, or importer of a class I device to maintain records, or to submit information not in its possession, unless such report or information is necessary to determine whether a device is misbranded or adulterated. The House Report cautions, however, that these limitations "should not be construed * * * as limiting the Secretary's authority to obtain information needed to insure that the public is protected from potentially hazardous devices." Id. at 24.

In discussing the notification provisions of section 518 of the act (21 U.S.C. 360h), the House Report, the principal legislative document on the amendments, states:

> The notification provision is similar to, and to some extent patterned after, comparable authority contained in the National Traffic and Motor Vehicle Safety Act of 1966, the Radiation Control for Health and Safety Act of 1968, and the Consumer Product Safety Act of 1972. These statutes also include requirements that manufacturers provide notification of defects in their products to appropriate Federal agencies. The Committee determined that a comparable provision in new section 518(a) with respect to devices would be unnecessary since the Secretary could require the reporting of such information under the recordkeeping and reporting authority provided in new section 519 of the Act.

(H. Rept. 853, supra, at 21.)

In its discussion of section 519 of the act, the House Report lists examples of reasonable reporting requirements, including reports of defects, adverse reactions, and patient injuries. That Congress intended FDA to use its authority under section 519 of the act to protect the public from potentially hazardous devices, as well as devices with confirmed hazards, is also clear from the legislative history. Id. at 24.

In the **Federal Register** of September 14, 1984 (49 FR 36348), FDA issued the current medical device reporting (MDR) regulations (21 CFR part 803). The regulations require manufacturers and importers of medical devices, including diagnostic devices, to report to FDA whenever the manufacturer or importer becomes aware of information that reasonably suggests that one of its marketed devices: (1) May have caused or contributed to a death or serious injury, or (2) has malfunctioned and that the device or any other device marketed by the manufacturer or importer would be likely to cause or contribute to a death or serious injury if the malfunction were to recur.

Since the enactment of the 1976 amendments, Congress has focused considerable attention on FDA's implementation and enforcement of the act with respect to medical devices. During this time, the General Accounting Office (GAO), Office of Technology Assessment (OTA), and Office of Inspector General of the Department of Health and Human Services (OIG) conducted investigations and issued reports on problems associated with significant weaknesses in FDA's information gathering ability and its followup mechanisms for information that is received. S. Rept. 513, 101st Cong., 2d sess. 15 (1990). A GAO study, for example, noted that although FDA has received more than a seven-fold increase in reports associated with device-related problems since the promulgation of the MDR regulation, serious under reporting of device-related, reportable events exists. GAO also noted that many firms are unaware of their obligation to report device-related deaths, injuries, and malfunctions to FDA, and that device-related deaths in hospitals are rarely reported to either FDA or the manufacturer. A GAO followup study in 1989 concluded that despite implementation of the MDR regulations, serious shortcomings exist.

Congress concluded from its own hearings and investigations and from its review of the GAO, OTA, and OIG investigations and reports that the 1976 amendments were not always adequate to protect the public health. (H. Rept. 808, 101st Cong., 2d sess. 13–14 (1990), S. Rept. 513, 101st Cong., 2d sess. 13–16 (1990).) On November 28, 1990, to correct these problems, the SMDA was signed into law to amend the medical device provisions of the act.

The SMDA added section 519(b)(1) to the act (21 U.S.C. 360i(b)(1)) to require that certain device user facilities report deaths related to medical devices to FDA and to the manufacturer, if known. FDA may also, by regulation, include outpatient diagnostic facilities in this requirement.

Although since 1976, under section 519 of the act, FDA has had the authority to require distributors to report adverse effects and deficiencies of devices, the agency until this point had not implemented this authority. However, the legislative history of the SMDA reflects Congress' belief that FDA must require distributors to make such reports because distributors may be the first to recognize possible device problems. (See H. Rept. 808, 101st Cong., 2d sess. 22–23 (1990).) Accordingly, the SMDA added section 519(a)(6) to the act to require distributors to report to FDA adverse effects and deficiencies of devices, and to submit copies of these reports to manufacturers. Id.

The SMDA also added section 519(d) to the act requiring reporting manufacturers and distributors to certify to FDA the number of reports submitted in a year or the fact that no such reports have been submitted to the agency. This requirement was directly in response to a GAO finding that certification would increase the efficiency of the MDR. (See S. Rept. 513, 101st Cong., 2d sess. 26 (1990).)

The SMDA directed FDA to issue a proposal to implement distributor

reporting and recordkeeping requirements within 9 months of the enactment. (See section 3(c)(1)(A) of the SMDA.) The SMDA provides that the proposed rule relating to distributor reporting would become final 18 months after the enactment of the SMDA, May 28, 1992, if a final rule was not promulgated by that date.

On November 26, 1991 (56 FR 60024), under the authority of sections 502, 510, 519, 520, 701, and 704 of the act (21 U.S.C. 352, 360, 360i, 360j, 371, and 374), FDA issued a proposed rule designated as a "tentative final rule" that would implement the reporting requirements of the SMDA relating to manufacturers, distributors, and user facilities. This tentative final rule would require device user facilities and distributors, including importers, to submit reports to FDA and/or the manufacturers, of deaths, serious illnesses, and serious injuries related to medical devices. This tentative final rule also proposed to amend existing reporting requirements in 21 CFR part 803 for manufacturers to conform them with the proposed reporting requirements for user facilities and distributors. Further, it proposed to require distributors and manufacturers to report certain malfunctions that may cause a death, serious illness, or serious injury. Under the tentative final rule and pursuant to section 519(d) of the act, distributors and manufacturers would also be required to certify annually the number of reportable events submitted during the previous calendar year or the fact that no such reports were received.

The tentative final rule also proposed to amend 21 CFR part 807 to require distributors to register and list with FDA, pursuant to section 510 of the act. This exercise of authority is necessary to implement the new adverse event reporting requirements for distributors.

II. Comments

In the **Federal Register** of January 24, 1992 (57 FR 2861), FDA announced that it was extending the comment period for the tentative final rule until February 26, 1992. FDA received over 300 comments on the tentative final rule. At present, FDA is still considering the comments on the tentative final rule relating to manufacturer, distributor, and user facility adverse event reporting and has not issued a final rule that is based on consideration of those comments. Because FDA did not promulgate a final rule for distributor reporting by May 28, 1992, however, the provisions in the tentative final rule relating to distributor adverse event reporting automatically became the final rule on that date pursuant to section 3(c) of the SMDA.

On June 16, 1992, subsequent to the statutory provision making the tentative final rule with respect to distributors automatically final, additional statutory provisions further amending distributor reporting requirements became law (the 1992 amendments). Section 5(a) of the 1992 amendments adopts a single standard to determine when injuries caused by devices must be reported to FDA: A manufacturer, importer, or user facility is required to report a device-related, adverse event to FDA when information reasonably suggests that a device * * * "may have caused or contributed to * * * death or * * * serious injury."

Section 5(a) of the 1992 amendments also adopts a single definition for the types of injuries that manufacturers, importers, distributors, and user facilities must report. This definition requires reporting of an injury that is life threatening, results in permanent impairment of a body function or permanent damage to a body structure, or necessitates medical or surgical intervention to preclude permanent impairment of a body function or permanent damage to a body structure. This definition differs from the previous statutory definition of "serious injury" that is applied to device user facilities in that it deletes the requirement that an injury must require immediate intervention to preclude permanent impairment or damage in order to qualify as a reportable injury.

The effective date of the amendments made by section 5(a) of the 1992 amendments is either 1 year from the date of the enactment of the 1992 amendments, or on the effective date of the FDA regulations implementing such amendments, whichever occurs first. Because FDA has not issued regulations implementing the 1992 amendments, the provisions of the 1992 amendments became effective by operation of law on June 16, 1993. See section 5(b) of the 1992 amendments.

FDA is issuing this rule and notifying the public pursuant to the directive of section 3(c)(2) of the SMDA that distributor adverse event reporting requirements proposed in the November 26, 1991, tentative final rule are now final. This final rule reflects certain changes from the November 26, 1991, tentative final rule that conform to the 1992 amendments that became effective on June 16, 1993. In addition, FDA is issuing this final rule, based on consideration of comments received in response to the tentative final rule, requiring distributors to register their establishments and list their devices.

At a later date, FDA intends to amend the final distributor reporting regulation and to issue final regulations governing manufacturer and user facility reporting to reflect the changes to the reporting requirements for user facilities and manufacturers made by the 1992 amendments. These future final regulations will also reflect consideration of comments relating to adverse event reporting submitted in response to the November 26, 1991, tentative final rule.

Under the provisions of this final rule that became effective by operation of law, distributors, other than importers, are required to submit a report to FDA, and a copy of such report to the manufacturer, containing the information required by new § 804.28, as soon as practicable, but not later than 10 working days after the distributor becomes aware of information from any source, that reasonably suggests that there is a probability that a device marketed by the distributor has caused or contributed to a death, serious illness, or serious injury. Distributors, other than importers, must also submit reports to the manufacturer containing the information required by new § 804.28, as soon as practicable, but not later than 10 working days after the distributor becomes aware of information, from any source, that one of the devices marketed by the distributor has malfunctioned and such information reasonably suggests there is a probability that the device or any other device marketed by the distributor would cause a death, serious illness, or serious injury, if the malfunction were to recur.

Distributors that are importers are subject to a slightly different standard as required by the 1992 amendments. Specifically, an importer must submit a report to FDA, and a copy of such report to the manufacturer, containing the information required by new § 804.28, as soon as practicable, but not later than 10 working days after the importer becomes aware of information from any source that one of the devices marketed by the importer may have caused or contributed to a death or serious injury. Importers are also required to submit reports to the manufacturer containing the information required under new § 804.28 as soon as practicable but not later than 10 working days after the importer becomes aware of information, from any source, that reasonably suggests, that one of its marketed devices has malfunctioned and such device or a similar device marketed by the importer would be likely to cause or to contribute to a death or serious injury if the malfunction were to recur.

The agency is aware that many distributors have limited capabilities to conduct followup investigations or failure analyses, or both. It is also unlikely that device user facilities are accustomed to providing patient or adverse device experience followup information to distributors. Consequently, a distributor's role in the MDR process is one of an intermediary who forwards data from user facilities, or any other source, to FDA and the manufacturer. Distributors are not required to investigate the cause of adverse device events; rather, they are required to assess whether or not a reportable event has occurred. This responsibility includes review and verification of data that they receive and supplying information that is within a distributor's control to FDA or the manufacturer, or both.

On June 3, 1993, FDA announced the availability of a new form for adverse event reports from manufacturers, user facilities, and distributors in the **Federal Register** (58 FR 31596). This single form replaces certain existing reporting forms and is to be used for reporting adverse events and product problems with devices as well as medications and other products regulated by the agency. This form will be required on the date that the final rule, based on comments to the November 26, 1991, tentative final rule, for user facility, manufacturer, and distributor reporting requirements becomes effective, or November 30, 1993, whichever occurs later. In the meantime, distributors are encouraged to submit reports on these forms. These forms may be obtained from the Division of Small Manufacturers Assistance, (HFZ–220), Center for Devices and Radiological Health, 5600 Fishers Lane, Rockville, MD 20857. Bulk copies of the form may be obtained from the Consolidated Forms and Publications Distribution Center, Washington Commerce Center, 3222 Hubbard Rd., Landover, MD 20785.

The final rule also requires that distributors certify annually to FDA either the number of MDR's during the previous annual reporting period, or that the distributor did not receive any reportable events during this period. Annual certification will follow the same schedule as registration. Distributors must also establish files of information related to MDR's and retain the files for 2 years from the date the report or information was submitted to FDA or the manufacturer or for a period of time equivalent to the design and expected life of the device, whichever is longer.

In order to implement the new adverse event reporting requirements, FDA is now issuing a final rule, based on comments on the tentative final rule, requiring distributors to register and list. The tentative final rule proposed revising current § 807.22(c) to require distributors who initiate or develop specifications for a device and distributors who repackage or relabel a device to submit a listing form and maintain an historical file (§ 807.22(c)(1) and (c)(2)). Such persons, however, are already required to list under current § 807.20(a) and (c). Therefore, in the final regulation, FDA is deleting proposed registration and listing requirements in § 807.22(c)(1) and (c)(2) for persons who initiate or develop device specifications or who repackage or relabel because these requirements would be duplicative of the existing requirements under current § 807.20(a) and (c). Accordingly, because such persons are already required to list, the new listing requirements for distributors add new requirements only for persons who do not initiate or develop the specifications for the device or repackage or relabel the device. Although these distributors are not required to submit a listing form, they must submit, for each device, listing information including the name and address of the manufacturer. Such distributors shall also be prepared to submit, when requested by FDA, the proprietary name, if any, and the common or usual name of each device for which they are distributors. The final regulations states that certain entities that manufacture devices according to another parties specifications or that sterilize devices are exempt from registration and listing requirements.

FDA received several comments relating to the distributor registration and listing requirements proposed in the tentative final rule. They are summarized below:

A. § 807.3(g)—Definitions

1. Some comments stated that clarification was needed for the difference between manufacturers and distributors.

A distributor, as defined in § 807.3(g), is any person who furthers the marketing of a device, but does not repackage, or otherwise change the container, wrapper, or labeling of the device package. A manufacturer includes any person who repackages or otherwise changes the container, wrapper, or labeling of a device in furtherance of the distribution of the device. To the extent that manufacturers are also engaged in the distribution process, they are only required to report as manufacturers.

B. § 807.20—Who Must Register and Submit a Device List

2. Two comments argued that FDA does not have authority to require distributors to register and list.

FDA does not agree with these comments. The plain language of the act provides FDA with explicit authority to require distributors to register and list. Section 510(c) of the act states that:

> "[e]very person upon first engaging in the manufacture, preparation, *propagation*, compounding, or processing of * * * a device or devices in any establishment which he owns or operates in any State shall immediately register with the Secretary his name, place of business, and such establishment."

(Emphasis added).

This language makes it clear that FDA has authority to require distributors to register because they are engaged in the "propagation" of devices. Although neither the statute nor the legislative history define the term "propagation," this term is defined in Webster's Ninth New Collegiate Dictionary as "the spreading of something abroad or into new regions." (Merriam Co. 1990). Certainly, persons who distribute medical devices in interstate commerce are "spreading * * * something * * * into new regions" and, therefore, are persons who propagate medical devices within the meaning of the statute. Moreover, the language of section 510(c) of the act demonstrates that Congress intended to provide FDA with broad authority to require persons who are engaged in a wide range of activities with respect to medical devices to register their devices. Accordingly, Congress not only authorized FDA to require persons to register who are engaged in the manufacture of devices, but also authorized FDA to require persons to register who are engaged in the "preparation, propagation, compounding, or processing" of medical devices. These words taken together, or individually, provide FDA with authority to require registration of any person who is involved with the distribution of medical devices.

The statute also provides clear authority to require distributors to list their devices. FDA's authority to require distributors to list derives directly from the agency's authority to require distributors to register. Specifically, section 510(j)(1) of the act requires that "[e]very person who registers under subsection (b), (c), or (d) shall, at the time of registration under any such subsection, file with the Secretary a list of all * * * devices * * * which are being

manufactured, prepared, propagated, compounded, or processed by him for commercial distribution." Accordingly, because FDA has authority to require distributors, as propagators of devices, to register, FDA also has authority to require distributors to list their devices pursuant to section 510(j)(1) of the act.

3. One comment stated that distributor listing information is duplicative of manufacturer listing information and that therefore, distributors should not be required to establish costly procedures to obtain and provide listing information. One comment suggested that distributors of devices be exempted from the registration and listing requirements. Another comment suggested that distributors of domestic devices be exempt form registering.

FDA does not agree with the comments that requiring distributors to list provides information that duplicates manufacturer listing information nor does FDA agree that distributors in general or distributors of domestic devices should be exempt from these requirements. Obtaining listing information from both manufacturers and distributors allows FDA to have an accurate up-to-date inventory of medical devices that is necessary to implement the agency's regulatory and enforcement authorities. Manufacturer listing information alone does not provide FDA with information about who distributes products. Distributor registration and listing information is necessary because it will provide additional information that will help FDA in enforcement of distributor medical device reporting requirements, and in implementing product recalls and notifications under section 518 of the act. Accordingly, the final rule requires distributors to provide registration and listing information.

4. Two comments requested that multisite distributors be allowed the option of decentralized registration. Another comment stated that multisite distributors should be allowed the option to choose which location would be the reporting location and FDA contact location for purposes of FDA registration and reporting.

FDA agrees that multisite distributors should have the option of registering only a central location or each location. Under the final regulation, a multisite distributor who chooses to file registration for only one central location, must register only the primary or principal place of business establishment located in the United States where the MDR complaint files are maintained.

C. § 807.21—Times for Establishment Registrationand Device Listing

5. One comment requested clarification as to when the distributor registration requirement is effective.

On June 15, 1992, FDA issued a letter notifying distributors that registration requirements were effective on July 15, 1992. FDA has reconsidered this position and is extending the deadline for submission of registration requirements to October 1, 1993. Distributors will also be required to list their devices as of October 1, 1993.

D. § 807.22—How and Where to Register and List

6. One comment suggested that this section be revised, so that there is a distinction between a repackager and a distributor.

The agency disagrees that this section should be modified because the definition does make a distinction between distributors and repackagers. Under the definition any person who changes the package or label is not a distributor. Repackagers or relabelers are considered manufacturers, and they must register and list as such.

E. § 807.65—Exemptions for Device Establishments

7. Two comments asked whether dental supply stores must register.

Under section 807.65(e) dental supply stores that dispense or sell devices in the regular course of business at the retail level are exempt from registration requirements.

The codified text below contains only those adverse event reporting requirements from the November 26, 1991, tentative final rule, as amended by the 1992 amendments, which apply to distributors, since only the distributor reporting requirements have become final. Incorporation of the distributor requirements from the tentative final rule into part 803 as it is currently written is not feasible because of organizational changes in the text. Therefore, the distributor reporting requirements are being codified separately at this time in new 21 CFR part 804. When the final rule is published in its entirety, the distributor requirements will be removed from part 804, and all of the reporting requirements for manufacturers, device user facilities and distributors, including importers, will be merged into 21 CFR part 803.

III. Paperwork Reduction Act of 1980

The recordkeeping and reporting requirements for medical device distributors, including importers, were submitted to the Office of Management and Budget (OMB) for review as part of the tentative final rule that was published in the **Federal Register** of November 26, 1991, that proposed the adverse event reporting requirements for manufacturers, distributors and user facilities. These recordkeeping and reporting requirements have been approved by OMB under control number 0910–0059 "Medical Devices: Medical Device Reporting, User Facility Reporting, Distributor Reporting, Manufacturer Reporting, Certification, Registration," and are in conformance with the Paperwork Reduction Act of 1980 (44 U.S.C. ch. 35).

OMB has also approved the new adverse event reporting form for use by distributors, as well as user facilities and manufacturers under control number 0910–0291 "MedWatch: FDA's Medical Products Reporting Program." The availability of the form was announced by the agency in the **Federal Register** of June 3, 1993 (58 FR 31596), and the form is in conformance with the requirements of the Paperwork Reduction Act of 1980 (44 U.S.C. ch. 35).

IV. Environmental Impact

The agency has determined under 21 CFR 25.24(a)(8) that this action is of a type that does not individually or cumulatively have a significant effect or the human environment. Therefore, neither an environmental assessment nor an environmental impact statement is required.

V. Economic Impact

In conjunction with the agency's issuance of the tentative final rule proposing to require device user facilities and distributors, including importers, to submit reports of certain adverse events to FDA and to manufacturers (56 FR 60024, November 26, 1991), FDA placed on file at the Dockets Management Branch a copy of the agency's threshold assessment of the economic effects of this rule.FDA has carefully examined the economic impact of this action in accordance with the requirements of Executive Order 12291 and the Regulatory Flexibility Act (Pub. L. 96–354). The agency concludes that the rule is not a major rule as defined in Executive Order 12291. Further, the agency certifies that the rule will not have a significant economic impact on a substantial number of small entities, as defined in the Regulatory Flexibility Act. A copy of the document supporting this determination is on file at the Dockets Management Branch (address above) and may be seen in that office between

9 a.m. and 4 p.m., Monday through Friday.

List of Subjects

21 CFR Part 804

Imports, Medical devices, Reporting and recordkeeping requirements.

21 CFR Part 807

Confidential business information, Medical devices, Reporting and recordkeeping requirements.

Therefore, under the Federal Food, Drug, and Cosmetic Act, and under authority delegated to the Commissioner of Food and Drugs, new part 804 is added and part 807 is amended as follows:

1. New part 804 is added to read as follows:

PART 804—MEDICAL DEVICE DISTRIBUTOR REPORTING

Subpart A—General Provisions

Sec.
804.1 Scope.
804.3 Definitions.
804.9 Public availability of reports.

Subpart B—Reports and Records

804.25 Reports by distributors.
804.27 Where to submit a report.
804.28 Reporting form.
804.30 Annual certification.
804.31 Additional requirements.
804.32 Supplemental information.
804.33 Alternative reporting requirements.
804.34 Written MDR procedures.
804.35 Files.

Authority: Secs. 502, 510, 519, 520, 701, 704 of the Federal Food, Drug, and Cosmetic Act (21 U.S.C. 352, 360, 360i, 360j, 371, 374).

Subpart A—General Provisions

§ 804.1 Scope.

(a) FDA is requiring medical device distributors to report deaths, serious illnesses, and serious injuries that are attributed to medical devices. Distributors are also required to report certain device malfunctions and to submit a report to FDA annually certifying the number of medical device reports filed during the preceding year, or that no reports were filed. These reports enable FDA to protect the public health by helping to ensure that devices are not adulterated or misbranded and are otherwise safe and effective for their intended use. In addition, device distributors are required to establish and maintain complaint files or incident files as described in § 804.35, and to permit any authorized FDA employee at all reasonable times to have access to, and to copy and verify, the records contained in this file. This part supplements, and does not supersede, other provisions of this subchapter, including the provisions of part 820 of this chapter.

(b) References in this part to regulatory sections of the Code of Federal Regulations are to chapter I of title 21, unless otherwise noted.

§ 804.3 Definitions.

(a) Act means the Federal Food, Drug, and Cosmetic Act.

(b) and (c) [Reserved]

(d) *Distributor* means any person, including any person who imports a device into the United States, who furthers the marketing of a device from the original place of manufacture to the person who makes final delivery or sale to the ultimate user but who does not repackage or otherwise change the container, wrapper, or labeling of the device or device package. One who repackages or otherwise changes the container, wrapper, or labeling, is a manufacturer under § 804.3(k).

(e) *Distributor Report Number* means the number that uniquely identifies each report submitted by a distributor. Distributors who receive or submit reports shall use their seven digit FDA registration number, calendar year that the report is received, and a sequence number. For example, the complete number will appear as follows: 1234567–1991–0001. Distributor report numbers shall also be required on FDA form 3500A.

(f) *FDA* means the Food and Drug Administration.

(g) [Reserved]

(h) *Incident files* are those files containing documents or other information, which are related to adverse events that may have been caused by a device.

(i) *Information that reasonably suggests that there is a probability that a device has caused or contributed to a death or serious injury or serious illness* means information, including professional, scientific, or medical facts, observations, or opinions, which would cause a reasonable person to believe that a device caused or contributed to a death, serious injury, or serious illness.

(j) *Malfunction* means the failure of a device to meet any of its performance specifications or otherwise to perform as intended. Performance specifications include all claims made in the labeling for the device. The intended performance of a device refers to the objective intent of the persons legally responsible for the labeling of the device. The intent is determined by such persons' expressions or may be shown by the circumstances surrounding the distribution of the device. This objective intent may, for example, be shown by labeling claims, advertising matter, or oral or written statements by such persons or their representatives. It also may be shown by the circumstances that the device is, with the knowledge of such persons or their representatives, offered and used to perform a function for which it is neither labeled nor advertised.

(k) *Manufacturer* means any person who manufactures, prepares, propagates, compounds, assembles, or processes a device chemically, physically, biologically, or by other procedures. The term includes any person who:

(1) Repackages or otherwise changes the container, wrapper, or labeling of a device in furtherance of the distribution of the device from the original place of manufacture, to the person who makes final delivery or sale to the ultimate user or consumer;

(2) Initiates specifications for devices that are manufactured by a second party for subsequent distribution by the person initiating the specifications; or

(3) Manufactures components or accessories which are devices that are ready to be used and are intended to be commercially distributed and are intended to be used as is, or are processed by a licensed practitioner or other qualified person to meet the needs of a particular patient.

(l) *MDR* means medical device report.

(m) *MDR reportable event* means:

(1) The event for which a distributor, other than an importer, required to report under this part has received or become aware of information that reasonably suggests that there is a probability that a device has caused or contributed to a death, serious illness, or serious injury; or

(2) The event for which an importer required to report under this part has received or become aware of information that reasonably suggests that a device may have caused or contributed to a death or serious injury; or

(3) A malfunction, for which a distributor, other than an importer, required to report under this part has received or become aware of information that reasonably suggests that there is a probability that the device, if the malfunction were to recur, would be likely to cause or contribute to a death, serious illness, or serious injury; or

(4) A malfunction, for which an importer required to report under this part has received or become aware of information that reasonably suggests that a device has malfunctioned and that such device or a similar device would be likely to cause or contribute

to a death or serious injury if the malfunction were to recur.

(n) through (p) [Reserved]

(q) *Permanent* means nonreversible impairment or damage.

(r) *Probability, probable, or probably* means, for purposes of this section, that a person would have reason to believe, based upon an analysis of the event and device, that the device has caused or contributed to an adverse event. This term does not signify statistical probability.

(s) *A remedial action* is any recall, repair, modification, adjustment, relabeling, destruction, inspection, patient monitoring, notification, or any other action relating to a device that is initiated by a distributor, in response to information that it receives or otherwise becomes aware of, that reasonably suggests that one of its marketed devices has caused or contributed to an MDR reportable event.

(t) *Serious illness* means an event that:

(1) Is life threatening;

(2) Results in permanent impairment of a body function or permanent damage to the body structure; or

(3) Necessitates immediate medical or surgical intervention to preclude permanent impairment of a body function or permanent damage to a body structure.

(u) *Serious injury* means an event that:

(1) Is life threatening;

(2) Results in permanent impairment of a body function or permanent damage to a body structure, or

(3) Necessitates medical or surgical intervention to preclude permanent impairment of a body function or permanent damage to a body structure.

(v) [Reserved]

(w) *Work day* means Monday through Friday excluding Federal holidays. Federal holidays include New Year's Day, Martin Luther King Jr.'s Birthday, Presidents' Day, Memorial Day, Independence Day, Labor Day, Columbus Day, Veterans Day, Thanksgiving Day, and Christmas Day.

(x) Any term defined in section 201 of the act shall have the same definition unless otherwise defined in this part.

§ 804.9 Public availability of reports.

(a) Any report, including any FDA record of a telephone report, submitted under this part is available for public disclosure in accordance with part 20 of this chapter.

(b) Before public disclosure of a report, FDA will delete from the report:

(1) Any information that constitutes trade secret or confidential commercial or financial information under § 20.61 of this chapter; and

(2) Any personnel, medical, and similar information, including the serial numbers of implanted devices, which would constitute a clearly unwarranted invasion of personal privacy under § 20.63 of this chapter; provided, that, except for the information under § 20.61 of this chapter, FDA will disclose to a patient who requests a report all the information in the report concerning that patient.

Subpart B—Reports and Records

§ 804.25 Reports by distributors.

(a)(1) A distributor, other than an importer, shall submit to FDA a report, and a copy of such report to the manufacturer, containing the information required by § 804.28 on FDA form 3500A as soon as practicable, but not later than 10 working days after the distributor receives or otherwise becomes aware of information from any source, including user facilities, individuals, or medical or scientific literature, whether published or unpublished, that reasonably suggests that there is a probability that a device marketed by the distributor has caused or contributed to a death, serious illness, or serious injury.

(2) An importer shall submit to FDA a report, and a copy of such report to the manufacturer, containing the information required by § 804.28 on FDA form 3500A as soon as practicable, but not later than 10 working days after the importer receives or otherwise becomes aware of information from any source, including user facilities, individuals, or medical or scientific literature, whether published or unpublished, that reasonably suggests that one of its marketed devices may have caused or contributed to a death or serious injury.

(b)(1) A distributor, other than an importer, shall submit to the manufacturer a report containing information required by § 804.28 on FDA form 3500A, as soon as practicable, but not later than 10 working days after the distributor receives or otherwise becomes aware of information from any source, including user facilities, individuals, or through the distributor's own research, testing, evaluation, servicing, or maintenance of one of its devices, that one of the devices marketed by the distributor has malfunctioned and such information reasonably suggests that there is a probability that the device or any other device marketed by the distributor would cause a death, serious illness, or serious injury, if the malfunction were to recur.

(2) An importer shall submit to the manufacturer a report containing information required by § 804.28 on FDA form 3500A, as soon as practicable, but not later than 10 working days after the importer receives or otherwise becomes aware of information from any source, including user facilities, individuals, or through the distributor's own research, testing, evaluation, servicing, or maintenance of one of its devices, that one of the devices marketed by the importer has malfunctioned and that such device or a similar device marketed by the importer would be likely to cause or contribute to a death or serious injury if the malfunction were to recur.

§ 804.27 Where to submit a report.

(a) Any telephone report required under this part shall be provided to 301–427–7500.

(b) Any facsimile report required under this part shall be provided to 301–881–6670.

(c) Any written report or additional information required under this part shall be submitted to:

Food and Drug Administration,
Center for Devices and Radiological Health,
Distributor Report,
P.O. Box 3002,
Rockville, MD 20847–3002.

§ 804.28 Reporting form.

(a) Each distributor that submits a report on an MDR reportable event shall complete and submit the applicable portions of FDA form 3500A in so far as the information is known or should be known to the distributor, and submit it to FDA, and to the manufacturer as required by § 804.25.

(b) Each distributor shall submit the information requested on FDA form 3500A, including:

(1) Identification of the source of the report.

(i) Type of source that reported the event to thedistributor (e.g., lay user owner; lay user lessee, hospital, nursing home, outpatient diagnostic facility, outpatient treatment facility, ambulatory surgical facility);

(ii) Distributor report number;

(iii) Name, address, and telephone number of the reporting distributor and the source that reported the event to the distributor; and

(iv) Name of the manufacturer of the device.

(2) Date information.

(i) The date of the occurrence of the event;

(ii) The date the source that reported the event to the distributor became aware of the event;

(iii) The date the event was reported to the manufacturer and/or FDA; and

(iv) The date of this report.

(3) The type of MDR reportable event, e.g., death, serious illness, serious

injury, or malfunction, and whether an imminent hazard was involved;

(4) Patient information including age, sex, diagnosis, and medical status immediately prior to the event and after the event;

(5) Device information including brand and labeled name, generic name, model number or catalog number or other identifying numbers, serial number or lot number, purchase date, expected shelf life/expiration date (if applicable), whether the device was labeled for single use, and date of implant (if applicable);

(6) Maintenance/service information data including the last date of service performed on the device, where service was performed, whether service documentation is available, and whether service was in accordance with the service schedule;

(7) Whether the device is available for evaluation and, if not, the disposition of the device;

(8) Description of the event.

(i) Who was operating or using the device when the eventoccurred;

(ii) Whether the device was being used as labeled or as otherwise intended;

(iii) The location of the event;

(iv) Whether there was multi-patient involvement, and if so, how many patients were involved;

(v) A list of any other devices whose performance may have contributed to the event and their manufacturers, and the results of any analysis or evaluation with respect to such device (or a statement of why no analysis or evaluation was performed); and

(vi) A complete description of the event including, but not limited to, what happened, how the device was involved, the nature of the problem, patient followup/treatment required, and any environmental conditions that may have influenced the event.

(9) The results of any analysis of the device and the event, including:

(i) The method of evaluation or an explanation of why no evaluation was necessary or possible;

(ii) The results and conclusions of the evaluation;

(iii) The corrective actions taken; and

(iv) The degree of certainty concerning whether the device caused or contributed to the reported event;

(10) The name, title, address, telephone number, and signature of the person who prepared the report.

804.30 Annual certification.

Distributors required to report under this section shall submit a certification report to FDA by the date designated for annual registration for the firm in § 807.21 of this chapter. This date will cover the period ending 1 month before the month of the scheduled date of mailing as indicated in § 807.21(a). The report will contain the following information:

(a) The name, address, telephone number, and FDA registration number of the distributor;

(b) A statement certifying that:

(1) The distributor listed in paragraph (a) of this section has filed reports under this section during the previous 12-month period and all MDR reportable events have been submitted to FDA and/or to the appropriate manufacturer. The report will also include the number of death, serious injury or serious illness reports that were submitted to FDA, and the number of malfunction reports that were submitted to manufacturers; or

(2) The distributor listed in paragraph (a) of this section did not receive any reportable events during the previous 12-month period.

(c) The name, address, title, telephone number, and signature of the individual making the certification for the firm. This person must be a responsible person designated by the firm.

§ 804.31 Additional requirements.

Requests for additional information. If FDA determines that the protection of the public health requires information in addition to that included in the medical device reports submitted to FDA under this part, the distributor shall, upon FDA's request, submit such additional information. Any request by FDA under this section shall state the reason or purpose for which the information is being requested, and specify a due date for the submission of such information.

§ 804.32 Supplemental information.

(a) Only one MDR is required under this part if the distributor becomes aware, from more than one source, of information concerning the same patient and the same event.

(b) An MDR that would otherwise be required under this section is not required by the distributor if:

(1) The distributor determines that the information received is erroneous in that a death, serious injury, serious illness, or the malfunction did not occur; or

(2) The distributor determines that the information received is erroneous in that the device that is the subject of the information was distributed by another distributor. A distributor shall forward to FDA any report that is erroneously sent to the distributor, with a cover letter explaining that the product in question is not distributed by that firm.

(c) A report or information submitted by a distributor under this part (and any release by FDA of that report or information) does not necessarily reflect a conclusion by the party submitting the report or by FDA that the report or information constitutes an admission that the device, the establishment submitting the report, or employees thereof, caused or contributed to a death, serious injury, serious illness, or malfunction. A distributor need not admit, and may deny, that the report or information submitted under this part constitutes an admission that the device, the party submitting the report, or employees thereof, caused or contributed to a death or serious injury, serious illness, or malfunction.

§ 804.33 Alternative reporting requirements.

(a) Distributors may request exemptions from any or all of the reporting requirements in this part. These requests are required to be in writing and to include both the information necessary to identify the firm and device and an explanation why the request is justified.

(b) FDA may grant a distributor, in writing, an exemption from any or all of the reporting requirements in this part and may change the frequency of reporting to quarterly, semiannually, annually, or other appropriate time periods. In granting such exemptions, FDA may impose other reporting requirements to ensure the protection of public health and safety. FDA may also authorize the use of alternative reporting media such as magnetic tape or disk, in lieu of FDA forms.

(c) FDA may revoke alternative reporting options, in writing, if FDA determines that protection of the public health justifies a return to the requirements as stated in this part.

§ 804.34 Written MDR procedures.

Device distributors shall maintain and implement written MDR procedures in the following areas:

(a) Training and education programs informing employees about obligations under this section, including how to identify and report MDR reportable events;

(b) Internal systems that provide for timely and effective identification, communication, and evaluation of events that may be subject to MDR requirements, a standardized review process/procedure for determining when an event meets the criteria for reporting under this part, and timely transmission of complete MDR's to FDA and/or manufacturers; and

(c) Documentation and recordkeeping requirements for:

(1) Information that may be the subject of an MDR;

(2) All MDR's and information submitted to FDA and manufacturers;

(3) Information that facilitates the submission of certification reports; and

(4) Systems that ensure access to information that facilitates timely followup and inspection by FDA.

§ 804.35 Files.

(a) A device distributor shall establish a device complaint file in accordance with § 820.198 of this chapter and maintain a record of any information, including any written or oral communication, received by the distributor concerning all events that were considered for possible reporting under this part. Device incident records shall be prominently identified as such and shall be filed by device. The file shall also contain a copy of any MDR along with any additional information submitted to FDA under this part. A distributor shall maintain records that document the submission of copies of MDR's to manufacturers.

(b) A device distributor shall retain copies of the records required to be maintained under this section for a period of 2 years from the date that the report or additional information is submitted to FDA under § 804.25, or for a period of time equivalent to the design and expected life of the device, whichever is greater, even if the distributor has ceased to distribute the device that is the subject of the report or the additional information.

(c) A device distributor shall maintain the device complaint files established under this section at the distributor's principal business establishment. A distributor that is also a manufacturer may maintain the file at the same location as the manufacturer maintains its complaint file under §§ 820.180 and 820.198 of this chapter. A device distributor shall permit any authorized FDA employee, during all reasonable times, to have access to, and to copy and verify, the records required by this part.

PART 807—ESTABLISHMENT REGISTRATION AND DEVICE LISTING FOR MANUFACTURERS AND DISTRIBUTORS OF DEVICES

2. The authority citation for 21 CFR part 807 is revised to read as follows:

Authority: Secs. 301, 501, 502, 510, 513, 515, 519, 520, 701, 704 of the Federal Food, Drug, and Cosmetic Act (21 U.S.C. 331, 351, 352, 360, 360c, 360e, 360i, 360j, 371, 374).

3. Part 807 is amended by revising the part heading to read as follows:

PART 807—ESTABLISHMENT REGISTRATION AND DEVICE LISTING FOR MANUFACTURERS AND DISTRIBUTORS OF DEVICES

4. Section 807.3 is amended by revising paragraphs (d)(2) and (g), by amending paragraph (e)(3) by removing the word "and" after the semicolon at the end of the paragraph, by amending paragraph (e)(4) by removing the period at the end of the paragraph and by adding in its place "; and", and by adding new paragraph (e)(5) to read as follows:

§ 807.3 Definitions.

* * * * *

(d) * * *

(2) Distribution of domestic or imported devices; or

* * * * *

(e) * * *

(5) The annual certification of medical device reports required by § 804.30 of this chapter or forwarding the certification form to the person designated by the firm as responsible for the certification.

* * * * *

(g) Distributor means any person who furthers the marketing of a device from the original place of manufacture, whether domestic or imported, to the person who makes final delivery or sale to the ultimate consumer or user, but does not repackage, or otherwise change the container, wrapper, or labeling of the device or device package.

* * * * *

5. Section 807.20 is amended by revising paragraph (a)(4) and by adding new paragraphs (c) and (d) to read as follows:

§ 807.20 Who must register and submit a device list.

(a) * * *

(4) Distributors;

* * * * *

(c) Distributors of domestic or imported devices must register and fulfill their listing obligations as described in § 807.22(c) of this part. Distributors with multiple sites may submit one registration for all sites or submit a registration for each site. If a multisite distributor chooses to file one registration, the registration must be from the principal business establishment which maintains the MDR complaint files.

(d) Registration and listing requirements shall not pertain to any person who:

(1) Manufacturers devices for another party who both initiated the specifications and commercially distributes the device;

(2) Sterilizes devices on a contract basis for other registered facilities who commercially distribute the devices.

* * * * *

6. Section 807.21 is revised to read as follows:

§ 807.21 Times for establishment registration and device listing.

(a) An owner or operator of an establishment who has not previously entered into an operation defined in § 807.20 shall register within 30 days after entering into such an operation and submit device listing information at that time. An owner or operator of an establishment shall update its registration information annually within 30 days after receiving registration forms from FDA. FDA will mail form FDA-2891a to the owners or operators of registered establishments according to a schedule based on the first letter of the name of the owner or operator. The schedule is as follows:

First letter of owner or operator name	Date FDA will mail forms
A, B, C, D, E	March.
F, G, H, I, J, K, L, M	June.
N, O, P, Q, R	August.
S, T, U, V, W, X, Y, Z	November.

(b) Owners or operators of all registered establishments shall update their device listing information every June and December or, at their discretion, at the time the change occurs.

7. Section 807.22 is amended by revising paragraphs (a) and (c) to read as follows:

§ 807.22 How and where to register establishments and list devices.

(a) The first registration of a device establishment shall be on form FDA-2891 (Initial Registration of Device Establishment). Forms are obtainable upon request from the Center for Devices and Radiological Health (HFZ-342), Food and Drug Administration, 1390 Piccard Dr., Rockville, MD 20850, or from the Food and Drug Administration (FDA) district offices. Subsequent annual registration shall be accomplished on form FDA-2891a (Annual Registration of Device Establishment), which will be furnished by FDA to establishments whose registration for that year was validated under § 807.35(a). The forms will be mailed to the owner or operators of all establishments in accordance with the schedule as described in § 807.21(a). The completed form shall be mailed to

the above-designated address within 30 days after receipt from FDA.

* * * * *

(c) The listing obligations of the distributor are satisfied as follows:

(1) The distributor is not required to submit a form FDA-2892 for those devices for which such distributor did not initiate or develop the specifications for the device or repackage or relabel the device. However, the distributor shall submit, for each device, the name and address of the manufacturer. Distributors shall also be prepared to submit, when requested by FDA, the proprietary name, if any, and the common or usual name of each device for which they are the distributors; and

(2) The distributor shall update the information required by paragraphs (c)(1) of this section at the intervals specified in § 807.30.

8. Section 807.25 is amended by revising paragraph (b) to read as follows:

§ 807.25 Information required or requested for establishment registration and device listing.

* * * * *

(b) The owner or operator shall identify the device activities of the establishment such as manufacturing, repackaging, or distributing devices.

* * * * *

9. Section 807.65 is amended by revising paragraph (e) and by removing and reserving paragraph (g) to read as follows:

§ 807.65 Exemptions for device establishments.

* * * * *

(e) Pharmacies, surgical supply outlets, or other similar retail establishments making final delivery or sale to the ultimate user. This exemption also applies to a pharmacy or other similar retail establishment that purchases a device for subsequent distribution under its own name, e.g., a properly labeled health aid such as an elastic bandage or crutch, indicating "distributed by" or "manufactured for" followed by the name of the pharmacy.

* * * * *

Dated: August 25, 1993.

Michael R. Taylor,

Deputy Commissioner for Policy.

[FR Doc. 93–21184 Filed 8–31–93; 8:45 am]

BILLING CODE 4160–01–F

federal register

Wednesday
September 1, 1993

Part VI

Department of Housing and Urban Development

Leasing of HUD-Owned Single Family Properties to State and Local Governments for Use in Law Enforcement; Notice

DEPARTMENT OF HOUSING AND URBAN DEVELOPMENT

Office of the Assistant Secretary for Housing-Federal Housing Commissioner

[Docket No. N-93-3651; FR-3556-N-01]

Leasing of HUD-Owned Single Family Properties to State and Local Governments for Use in Law Enforcement

AGENCY: Office of the Assistant Secretary for Housing-Federal Housing Commissioner, HUD.

ACTION: Notice.

SUMMARY: Today, HUD is announcing a set-aside under the Single Family Property Disposition Regulations that is designed to enhance the quality of life by increasing public safety in high crime neighborhoods. Under this set-aside, HUD will make available for lease, to state and local governments for use by local law enforcement agencies, up to 100 single-family homes from the HUD-owned housing inventory. Leased properties will be used for law enforcement purposes, e.g., satellite police stations; however, leased properties may not be used for detention facilities. Assisting local governments in making the presence of law enforcement agencies available, where necessary and desirable, will further the Department's objective of creating a safe and decent housing environment for all American families.

DATES: September 1, 1993.

FOR FURTHER INFORMATION CONTACT: Jackie Campbell, Deputy Director, Office of Insured Single Family Housing, Department of Housing and Urban Development, 451 Seventh Street SW., Washington, DC 20410; telephone (202) 708-3046; the telecommunications device for the deaf (TDD) telephone number is (202) 708-4594. (These are not toll free numbers.)

SUPPLEMENTARY INFORMATION:

I. Background

HUD's regulations at 24 CFR Part 291, Disposition of HUD-acquired Single Family Property, allow the Secretary to lease properties for a variety of purposes that advance the Department's mission. Section 291.200 authorizes the Department to lease acquired properties to "other government agencies for defense, *law enforcement*, or other purposes" when the Secretary determines that it is in the interest of the Department.

A major goal of the Department is to use its resources in a manner that enhances the general well-being of American communities. Promoting safe neighborhoods is a critical component of the Nation's housing policy. Recently, a number of localities have begun to focus greater effort into encouraging closer cooperation between police officers and residents of the communities that they serve. Under this concept, a safer environment is believed to stem from the continuing and routine presence of officers in the community, rather than the situation where officers merely react to specific criminal activities.

An example of "community policing" was recently described in the Washington Post of May 15, 1993. According to the article, several "satellite" or "mini"-police stations are being operated in northern Virginia, with the police presence designed to "build trust and address the root cause of crime instead of simply dealing with the aftermath."

The Department wants to assist these kinds of efforts. Accordingly, it will utilize its authority under 24 CFR part 291 to make available, for this purpose, up to 100 single-family properties nationwide. Ten properties will be allocated to each of the ten HUD Regions. Circumstances under which properties can be leased are described immediately below.

II. Requirements for Leasing of Properties

Requirements for participation in this set-aside under 24 CFR 291.200 fall into three categories, as follows:

A. Eligible lessees;
b. Eligible properties; and
C. Lease/Purchase Terms.

A. Eligible lessees

Only a unit of state or local government can apply to lease a property under this set-aside. Only one property may be leased by a single unit of government at a time. The applicant/lessee (hereinafter lessee) can use the property for law enforcement activity (e.g., a satellite duty station), but cannot use the property as a detention facility. Moreover, the property cannot be used for such purposes as a community social/resource center, drug rehabilitation center, or halfway house.

For many communities, an added law enforcement presence will result in a variety of benefits, ranging from reduced crime to increased property values. However, because this set-aside under 24 CFR 291.200 is designed to serve community residents, the Department will require lessees to certify that there is community support for the proposed police substation.

B. Eligible Properties

HUD plans to allocate 100 properties under this set-aside; ten per Region. (If demand is slight in one area, HUD may reallocate units accordingly.) The property must be located in a "high-crime" area. A written certification that attests to this fact shall be required of the official responsible for law enforcement in the jurisdiction within which the property is located. Also, there must be a significant number of properties with FHA-insured mortgages in the neighborhood to be served. HUD will make this determination. Eligible properties may not be under lease in another program, or under contract for sale.

C. Lease/Purchase Terms

A single family property, leased under this set-aside pursuant to 24 CFR 291.200, shall have a lease term that cannot exceed one year. The rental rate for the lease term will be one dollar. The lessee will be responsible for property taxes, hazard and liability insurance, repairs, maintenance and all other costs associated with the operation and maintenance of the property.

The lessee may not alter or repair the property (except for emergency repairs) without the prior written approval of HUD. Where HUD has approved major alterations or repairs to the property, section 504 of the Americans with Disabilities Act will apply, if applicable. Absent express written approval to the contrary, the property must be restored to its original, unaltered condition upon its return to the Department. Under HUD's lease-option program, the lessee may elect to purchase the property at any time during the term of the lease. Where the option to purchase is exercised, the purchase price will reflect the HUD-approved fair market value of the property as of the date the lease was executed, less the HUD approved discount in effect on the date that the purchase option is executed. If the lessee elects not to purchase the property, it will vacate the property immediately upon expiration of the lease term.

III. Participation in the Set-Aside Under 24 CFR 291.200

Properties will be leased to qualified lessees on a first come, first served basis. Interested governmental units should contact the local HUD Field Office in their jurisdiction for information on leasing of properties.

IV. Other Matters

A. Environmental Impact

A Finding of No Significant Impact with respect to the environment has been made in accordance with HUD regulations at 24 CFR part 50, which implement section 102(2)(C) of the National Environmental Policy Act of 1969. The finding is available for public inspection during regular business hours in the Office of General Counsel, the Rules Docket Clerk room 10276, 451 Seventh Street, SW., Washington, DC 20410.

B. Executive Order 12612, Federalism

The General Counsel, as the Designated Official under section 6(a) of Executive Order 12612, Federalism, has determined that the policies contained in this notice will not have substantial direct effects on states or their political subdivisions, or the relationship between the Federal government and the states, or on the distribution of power and responsibilities among the various levels of government. Specifically, any terms and conditions imposed by HUD on States that may lease Single Family properties under this set-aside comport with statutory requirements under section 203 of the National Housing Act and HUD's regulation under 24 CFR part 291. Such requirements promote the intent of the Congress, and therefore, no further review is necessary or appropriate.

C. Executive Order 12606, The Family

The General Counsel, as the Designated Official under Executive Order 12606, The Family, has determined that this notice does not have potential for significant impact on family formation, maintenance, and general well-being, and, thus, is not subject to review under the order. No significant change in existing HUD policies or programs will result from leasing 100 Single Family properties nationwide to state and local governments for use in law enforcement.

Dated: August 20, 1993.

Nicolas P. Retsinas,

Assistant Secretary for Housing-Federal Housing Commissioner.

[FR Doc. 93–21212 Filed 8–31–93; 8:45 am]

BILLING CODE 4210–27–M

Reader Aids

Federal Register

Vol. 58, No. 168

Wednesday, September 1, 1993

INFORMATION AND ASSISTANCE

Federal Register

Index, finding aids & general information	202–523–5227
Public inspection desk	523–5215
Corrections to published documents	523–5237
Document drafting information	523–3187
Machine readable documents	523–3447

Code of Federal Regulations

Index, finding aids & general information	523–5227
Printing schedules	523–3419

Laws

Public Laws Update Service (numbers, dates, etc.)	523–6641
Additional information	523–5230

Presidential Documents

Executive orders and proclamations	523–5230
Public Papers of the Presidents	523–5230
Weekly Compilation of Presidential Documents	523–5230

The United States Government Manual

General information	523–5230

Other Services

Data base and machine readable specifications	523–3447
Guide to Record Retention Requirements	523–3187
Legal staff	523–4534
Privacy Act Compilation	523–3187
Public Laws Update Service (PLUS)	523–6641
TDD for the hearing impaired	523–5229

ELECTRONIC BULLETIN BOARD

Free **Electronic Bulletin Board** service for Public Law numbers, Federal Register finding aids, and a list of Clinton Administration officials.	202–275–1538, or 275–0920

FEDERAL REGISTER PAGES AND DATES, SEPTEMBER

46073–46528.....1

CFR PARTS AFFECTED DURING SEPTEMBER

At the end of each month, the Office of the Federal Register publishes separately a List of CFR Sections Affected (LSA), which lists parts and sections affected by documents published since the revision date of each title.

LIST OF PUBLIC LAWS

Note: No public bills which have become law were received by the Office of the Federal Register for inclusion in today's **List of Public Laws**.

Last List August 19, 1993

TABLE OF EFFECTIVE DATES AND TIME PERIODS—SEPTEMBER 1993

This table is used by the Office of the Federal Register to compute certain dates, such as effective dates and comment deadlines, which appear in agency documents. In computing these dates, the day after publication is counted as the first day.

When a date falls on a weekend or holiday, the next Federal business day is used. (See 1 CFR 18.17)

A new table will be published in the first issue of each month.

DATE OF FR PUBLICATION	15 DAYS AFTER PUBLICATION	30 DAYS AFTER PUBLICATION	45 DAYS AFTER PUBLICATION	60 DAYS AFTER PUBLICATION	90 DAYS AFTER PUBLICATION
September 1	September 16	October 1	October 18	November 1	November 30
September 2	September 17	October 4	October 18	November 1	December 1
September 3	September 20	October 4	October 18	November 2	December 2
September 7	September 22	October 7	October 22	November 8	December 6
September 8	September 23	October 8	October 25	November 8	December 7
September 9	September 24	October 12	October 25	November 8	December 8
September 10	September 27	October 12	October 25	November 9	December 9
September 13	September 28	October 13	October 28	November 12	December 13
September 14	September 29	October 14	October 29	November 15	December 13
September 15	September 30	October 15	November 1	November 15	December 14
September 16	October 1	October 18	November 1	November 15	December 15
September 17	October 4	October 18	November 1	November 16	December 16
September 20	October 5	October 20	November 4	November 19	December 20
September 21	October 6	October 21	November 5	November 22	December 20
September 22	October 7	October 22	November 8	November 22	December 20
September 23	October 8	October 25	November 8	November 22	December 22
September 24	October 12	October 25	November 8	November 23	December 23
September 27	October 12	October 27	November 12	November 26	December 27
September 28	October 13	October 28	November 12	November 29	December 27
September 29	October 14	October 29	November 15	November 29	December 28
September 30	October 15	November 1	November 15	November 29	December 29

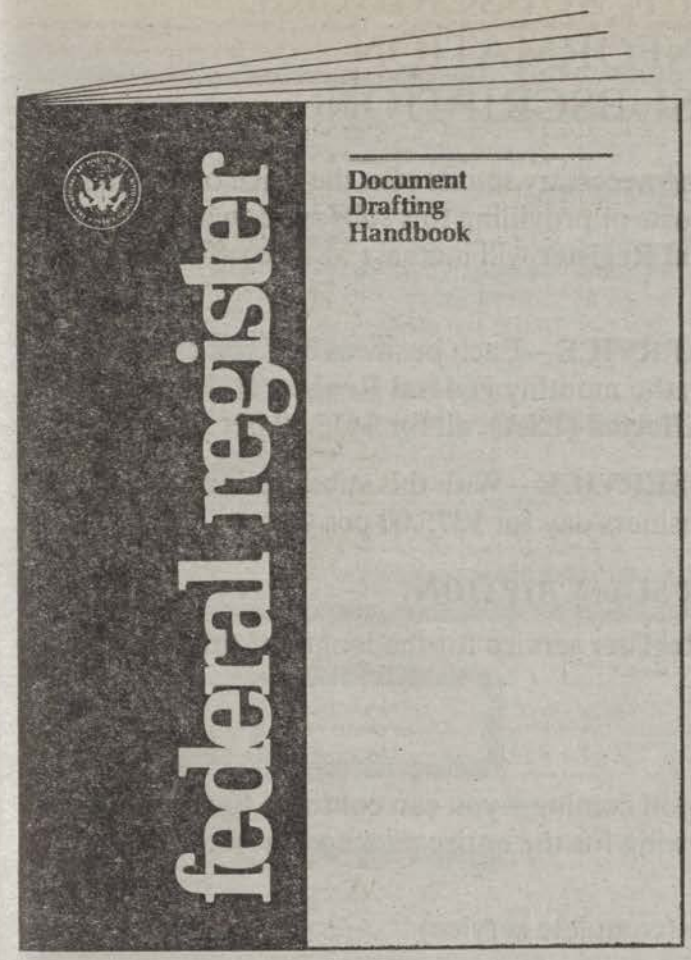

Federal Register Document Drafting Handbook

A Handbook for Regulation Drafters

This handbook is designed to help Federal agencies prepare documents for publication in the Federal Register. The updated requirements in the handbook reflect recent changes in regulatory development procedures, document format, and printing technology.

Price $5.50

Superintendent of Documents Publication Order Form

Order processing code: ***6133**

Charge your order. It's easy!

To fax your orders and inquiries—(202) 512-2250

☐ **YES,** please send me the following indicated publications:

_____ copies of **DOCUMENT DRAFTING HANDBOOK at $5.50 each.** S/N 069-000-00037-1

1. The total cost of my order is $_____ Foreign orders please add an additional 25%.
All prices include regular domestic postage and handling and are subject to change.

Please Type or Print

2. _____
(Company or personal name)

_____
(Additional address/attention line)

_____
(Street address)

_____
(City, State, ZIP Code)

(_____) _____
(Daytime phone including area code)

3. Please choose method of payment:

☐ Check payable to the Superintendent of Documents

☐ GPO Deposit Account ☐☐☐☐☐☐☐ – ☐

☐ VISA or MasterCard Account

☐☐☐☐☐☐☐☐☐☐☐☐☐☐☐☐☐☐☐☐

_____
(Credit card expiration date)

Thank you for your order!

_____
(Signature)

(Rev 12/91)

4. Mail To: New Orders, Superintendent of Documents, P.O. Box 371954, Pittsburgh, PA 15250–7954

FEDERAL REGISTER SUBSCRIBERS: IMPORTANT INFORMATION ABOUT YOUR SUBSCRIPTION

After 6 years without an adjustment, it has become necessary to increase the price of the **Federal Register** in order to begin recovering the actual costs of providing this subscription service. Effective October 1, 1992, the price for the **Federal Register** will increase and be offered as follows:

(1) FEDERAL REGISTER COMPLETE SERVICE—Each business day you can continue to receive the daily **Federal Register**, plus the monthly **Federal Register Index** and **Code of Federal Regulations List of Sections Affected (LSA)**, all for **$415.00** per year.

(2) FEDERAL REGISTER DAILY ONLY SERVICE—With this subscription service, you will receive the **Federal Register** every business day for **$375.00** per year.

HOW WILL THIS AFFECT YOUR CURRENT SUBSCRIPTION?

You will receive your current complete **Federal Register** service for the length of time remaining in your subscription.

AT RENEWAL TIME

At renewal time, to keep this important subscription coming—you can continue to receive the complete **Federal Register** service by simply renewing for the entire package, or you can select and order only the parts that suit your needs:

- renew your entire **Federal Register Service** (complete service)

or select. . .

- the daily only **Federal Register** (basic service)
- and complement the basic service with either of the following supplements: the monthly **Federal Register Index** or the monthly **LSA**

When your current subscription expires, you will receive a renewal notice to continue the complete **Federal Register** service. At that time, you will also receive an order form for the daily **Federal Register** basic service, the **Federal Register Index**, and the **LSA**.

To know when to expect the renewal notice, check the top line of your subscription mailing label for the month and year of expiration as shown in this sample:

A renewal notice will be sent approximately 90 days before the end of this month.

```
A FR SMITH212J                    DEC 92    R
JOHN SMITH
212 MAIN ST
FORESTVILLE      MD   20747
```

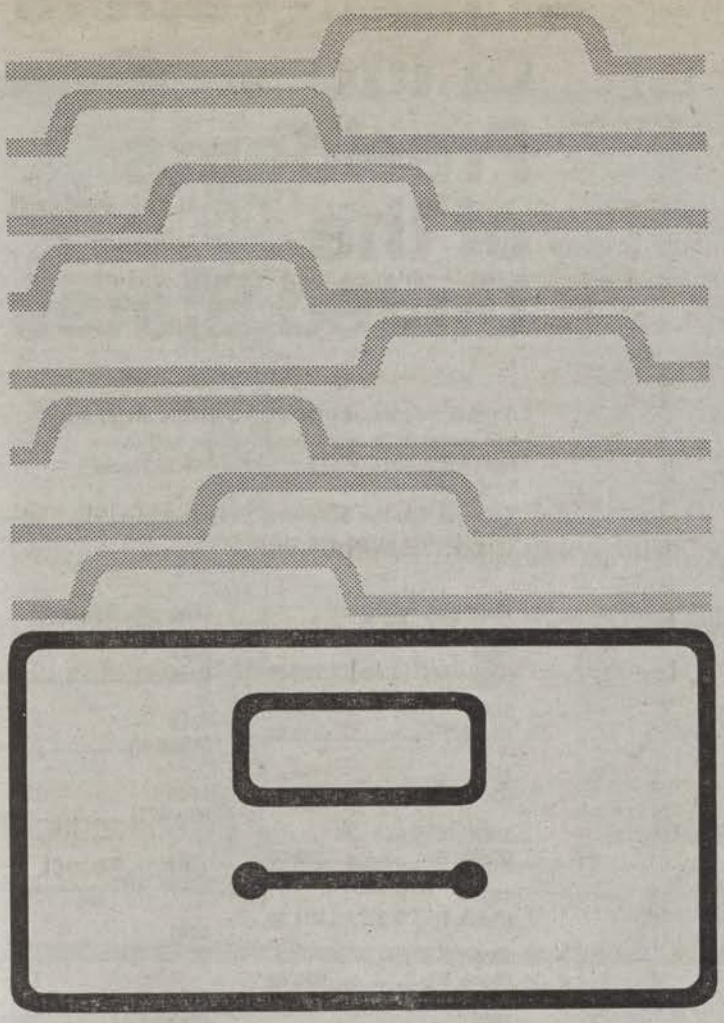

Guide to Record Retention Requirements

in the Code of Federal Regulations (CFR)

GUIDE: Revised January 1, 1992

SUPPLEMENT: Revised January 1, 1993

The GUIDE and the SUPPLEMENT should be used together. This useful reference tool, compiled from agency regulations, is designed to assist anyone with Federal recordkeeping obligations.

The various abstracts in the GUIDE tell the user (1) what records must be kept, (2) who must keep them, and (3) how long they must be kept.

The GUIDE is formatted and numbered to parallel the CODE OF FEDERAL REGULATIONS (CFR) for uniformity of citation and easy reference to the source document.

Compiled by the Office of the Federal Register, National Archives and Records Administration.

Superintendent of Documents **Publications** Order Form

Order Processing Code:
*

P3

Charge your order. It's Easy! MasterCard VISA

To fax your orders (202) 512-2250

☐ **YES**, please send me the following:

_____copies of the 1992 GUIDE TO RECORD RETENTION REQUIREMENTS IN THE CFR S/N 069-000-00046-1 at $15.00 each.

_____copies of the 1993 SUPPLEMENT TO THE GUIDE, S/N 069-001-00052-1 at $4.50 each.

The total cost of my order is $_____. International customers please add 25%. Prices include regular domestic postage and handling and are subject to change.

(Company or Personal Name) (Please type or print)

(Additional address/attention line)

(Street address)

(City, State, ZIP Code)

(Daytime phone including area code)

(Purchase Order No.)

May we make your name/address available to other mailers? YES ☐ NO ☐

Please Choose Method of Payment:

☐ Check Payable to the Superintendent of Documents

☐ GPO Deposit Account ☐☐☐☐☐☐☐-☐

☐ VISA or MasterCard Account

☐☐☐☐☐☐☐☐☐☐☐☐☐☐☐☐☐☐☐☐

☐☐☐☐ (Credit card expiration date)

Thank you for your order!

(Authorizing Signature) (5/93)

Mail To: New Orders, Superintendent of Documents
P.O. Box 371954, Pittsburgh, PA 15250-7954

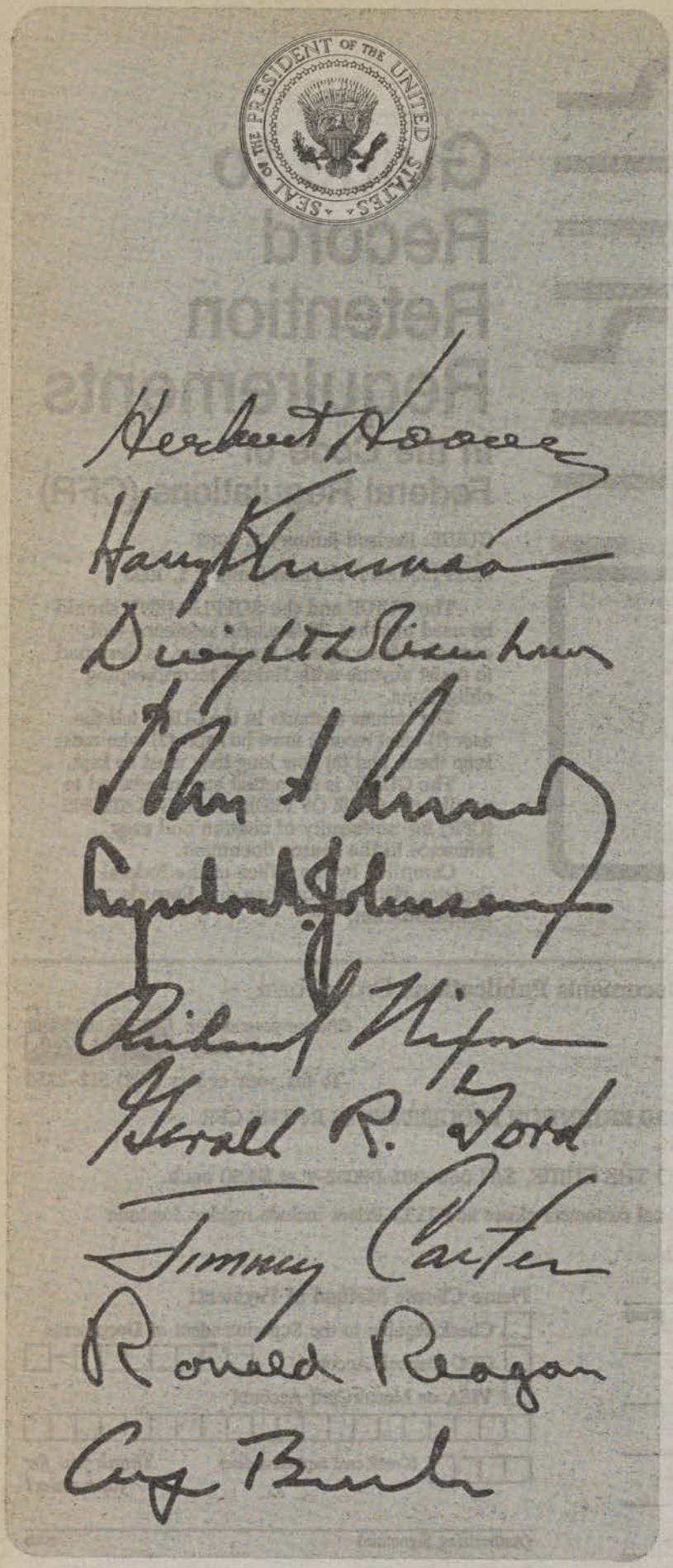

Public Papers of the Presidents of the United States

Annual volumes containing the public messages and statements, news conferences, and other selected papers released by the White House.

Volumes for the following years are available; other volumes not listed are out of print.

Ronald Reagan

1983 (Book I) $31.00

1983 (Book II) $32.00

1984 (Book I) $36.00

1984 (Book II) $36.00

1985 (Book I) $34.00

1985 (Book II) $30.00

1986 (Book I) $37.00

1986 (Book II) $35.00

1987 (Book I) $33.00

1987 (Book II) $35.00

1988 (Book I) $39.00

1988–89 (Book II) $38.00

George Bush

1989 (Book I) $38.00

1989 (Book II) $40.00

1990 (Book I) $41.00

1990 (Book II) $41.00

1991 (Book I) $41.00

1991 (Book II) $44.00

1992 (Book I) $47.00

Published by the Office of the Federal Register, National Archives and Records Administration

Mail order to:
New Orders, Superintendent of Documents
P.O. Box 371954, Pittsburgh, PA 15250–7954

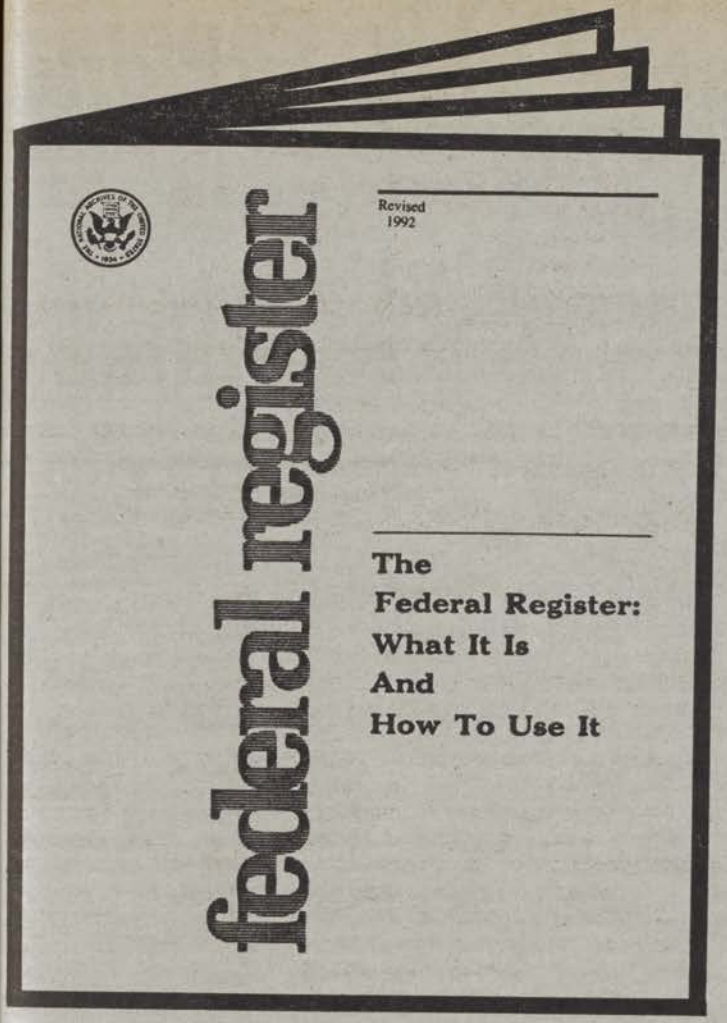

Announcing the Latest Edition

The Federal Register: What It Is and How to Use It

A Guide for the User of the Federal Register—Code of Federal Regulations System

This handbook is used for the educational workshops conducted by the Office of the Federal Register. For those persons unable to attend a workshop, this handbook will provide guidelines for using the *Federal Register* and related publications, as well as an explanation of how to solve a sample research problem.

Price $7.00

Superintendent of Documents **Publications** Order Form

Order processing code:
*6173

P3

Charge your order. It's Easy! MasterCard VISA

To fax your orders (202)-512-2250

☐ **YES**, please send me the following:

_____ copies of **The Federal Register-What It is and How To Use It**, at $7.00 per copy. Stock No. 069-000-00044-4

The total cost of my order is $_____. International customers please add 25%. Prices include regular domestic postage and handling and are subject to change.

(Company or Personal Name) (Please type or print)

(Additional address/attention line)

(Street address)

(City, State, ZIP Code)

(Daytime phone including area code)

(Purchase Order No.)

May we make your name/address available to other mailers? YES ☐ NO ☐

Please Choose Method of Payment:

☐ Check Payable to the Superintendent of Documents

☐ GPO Deposit Account ☐☐☐☐☐☐☐ – ☐

☐ VISA or MasterCard Account

☐☐☐☐☐☐☐☐☐☐☐☐☐☐☐☐☐☐☐☐

☐☐☐☐ (Credit card expiration date)

Thank you for your order!

(Authorizing Signature) (Rev. 1-93)

Mail To: New Orders, Superintendent of Documents
P.O. Box 371954, Pittsburgh, PA 15250-7954

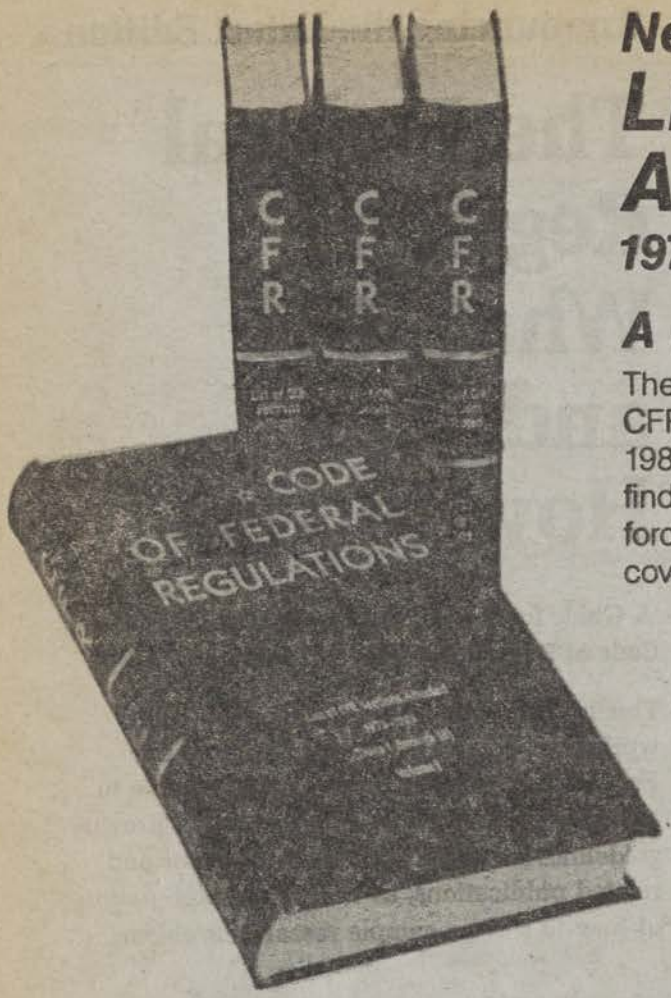

New Publication

List of CFR Sections Affected

1973-1985

A Research Guide

These four volumes contain a compilation of the "List of CFR Sections Affected (LSA)" for the years 1973 through 1985. Reference to these tables will enable the user to find the precise text of CFR provisions which were in force and effect on any given date during the period covered.

Volume I (Titles 1 thru 16) $27.00
Stock Number 069-000-00029-1

Volume II (Titles 17 thru 27) $25.00
Stock Number 069-000-00030-4

Volume III (Titles 28 thru 41) $28.00
Stock Number 069-000-00031-2

Volume IV (Titles 42 thru 50) $25.00
Stock Number 069-000-00032-1

Superintendent of Documents **Publications** Order Form

Order Processing Code:
***6962**

Charge your order. It's easy!

To fax your orders and inquiries—(202) 512-2250

Please Type or Print (Form is aligned for typewriter use.)

Prices include regular domestic postage and handling and are good through 12/92. After this date, please call Order and Information Desk at 202-783-3238 to verify prices. International customers please add 25%.

Qty.	Stock Number	Title	Price Each	Total Price
1	021-602-00001-9	Catalog—Bestselling Government Books	FREE	FREE
			Total for Publications	

(Company or personal name) (Please type or print)

(Additional address/attention line)

(Street address)

(City, State, ZIP Code)

( )
(Daytime phone including area code)

Mail order to:
New Orders, Superintendent of Documents
P.O. Box 371954, Pittsburgh, PA 15250-7954

Please Choose Method of Payment:

☐ Check payable to the Superintendent of Documents

☐ GPO Deposit Account ☐☐☐☐☐☐☐-☐

☐ VISA or MasterCard Account

(Credit card expiration date)

Thank you for your order!

(Signature)

Rev 6-92

Printed on recycled paper