AUTHENTICATED
U.S. GOVERNMENT
INFORMATION
GPO

9-8-92
Vol. 57 No. 174

REFERENCE

federal register

Tuesday
September 8, 1992

EAST BRUNSWICK
PUBLIC LIBRARY
SEP 09 1992
UNITED STATES
GOVERNMENT DEPOSITORY

ALEXANDER LIB.-RUTGERS
SEP 21 1994
U.S. GOVT DEPOSITORY

United States
Government
Printing Office
SUPERINTENDENT
OF DOCUMENTS
Washington, DC 20402

OFFICIAL BUSINESS
Penalty for private use, $300

**********3-DIGIT 088

A FR EAST DOOE DS 366BF
EAST BRUNSWICK PUB LIB
LIBRARY
2 JEAN WALLING CIVIC CTR
E BRUNSWICK NJ 08816

SECOND CLASS NEWSPAPER
Postage and Fees Paid
U.S. Government Printing Office
(ISSN 0097-6326)

9-8-92
Vol. 57 No. 174
Pages 40827-41052

federal register

Tuesday
September 8, 1992

Briefing on How To Use the Federal Register
For information on a briefing in Atlanta, GA, see announcement on the inside cover of this issue.

For important information on changes to your **Federal Register** subscription see inside back cover.

FEDERAL REGISTER Published daily, Monday through Friday, (not published on Saturdays, Sundays, or on official holidays), by the Office of the Federal Register, National Archives and Records Administration, Washington, DC 20408, under the Federal Register Act (49 Stat. 500, as amended; 44 U.S.C. Ch. 15) and the regulations of the Administrative Committee of the Federal Register (1 CFR Ch. I). Distribution is made only by the Superintendent of Documents, U.S. Government Printing Office, Washington, DC 20402.

The **Federal Register** provides a uniform system for making available to the public regulations and legal notices issued by Federal agencies. These include Presidential proclamations and Executive Orders and Federal agency documents having general applicability and legal effect, documents required to be published by act of Congress and other Federal agency documents of public interest. Documents are on file for public inspection in the Office of the Federal Register the day before they are published, unless earlier filing is requested by the issuing agency.

The seal of the National Archives and Records Administration authenticates this issue of the **Federal Register** as the official serial publication established under the Federal Register Act. 44 U.S.C. 1507 provides that the contents of the **Federal Register** shall be judicially noticed.

The **Federal Register** will be furnished by mail to subscribers for $340 per year in paper form; $195 per year in microfiche form; or $37,500 per year for the magnetic tape. Six-month subscriptions are also available at one-half the annual rate. The charge for individual copies in paper or microfiche form is $1.50 for each issue, or $1.50 for each group of pages as actually bound, or $175.00 per magnetic tape. Remit check or money order, made payable to the Superintendent of Documents. Mail to: New Orders, Superintendent of Documents, P.O. Box 371954, Pittsburgh, PA 15250–7954, or charge to your GPO Deposit Account or VISA or Mastercard.

There are no restrictions on the republication of material appearing in the **Federal Register.**

How To Cite This Publication: Use the volume number and the page number. Example: 57 FR 12345.

SUBSCRIPTIONS AND COPIES

PUBLIC

Subscriptions:

Paper or fiche	202–783–3238
Magnetic tapes	512–2235
Problems with public subscriptions	512–2303

Single copies/back copies:

Paper or fiche	783–3238
Magnetic tapes	512–2235
Problems with public single copies	512–2457

FEDERAL AGENCIES

Subscriptions:

Paper or fiche	523–5240
Magnetic tapes	512–2235
Problems with Federal agency subscriptions	523–5243

For other telephone numbers, see the Reader Aids section at the end of this issue.

THE FEDERAL REGISTER
WHAT IT IS AND HOW TO USE IT

FOR: Any person who uses the Federal Register and Code of Federal Regulations.

WHO: The Office of the Federal Register.

WHAT: Free public briefings (approximately 3 hours) to present:

1. The regulatory process, with a focus on the Federal Register system and the public's role in the development of regulations.
2. The relationship between the Federal Register and Code of Federal Regulations.
3. The important elements of typical Federal Register documents.
4. An introduction to the finding aids of the FR/CFR system.

WHY: To provide the public with access to information necessary to research Federal agency regulations which directly affect them. There will be no discussion of specific agency regulations.

ATLANTA, GA

WHEN: September 17, at 9:00 a.m.
WHERE: Centers for Disease Control
1600 Clinton Rd., NE.
Auditorium A
Atlanta, GA (Parking available)
RESERVATIONS: [404–639–3528 (Atlanta area)]
1–800–347–1997 (outside Atlanta area)

Contents

Federal Register

Vol. 57, No. 174

Tuesday, September 8, 1992

Agriculture Department
See Animal and Plant Health Inspection Service
RULES
Organization, functions, and authority delegations:
Under Secretary for International Affairs and Commodity Programs et al., 40829

Alcohol, Drug Abuse, and Mental Health Administration
NOTICES
Grants and cooperative agreements; availability, etc.:
Los Angeles target city cooperative agreement; drug program enhancement project, 40916
Meetings; advisory committees:
September, 40916

Alcohol, Tobacco and Firearms Bureau
RULES
Alcoholic beverages:
Specially denatured spirits; miscellaneous amendments, 40847
PROPOSED RULES
Alcoholic beverages:
Wine; standard containers; withdrawn, 40884
Alcohol, tobacco, and other excise taxes:
Distilled spirits, wine, and beer; importation, 40886
Distilled spirits, wine, beer, beer concentrate, and specially denatured spirits; exportation, 40887
Liquors and articles from Puerto Rico and Virgin Islands, 40885
Tobacco products and cigarette papers and tubes; exportation without payment of tax or with drawback of tax, 40889

Animal and Plant Health Inspection Service
PROPOSED RULES
Postentry quarantine of plants, 40872

Architectural and Transportation Barriers Compliance Board
PROPOSED RULES
Americans with Disabilities Act; implementation:
Accessibility guidelines—
Automated teller machines, 41006

Census Bureau
RULES
Freedom of Information Act; implementation, 40840

Centers for Disease Control
NOTICES
Diseases transmitted through food supply; annual update, 40917

Commerce Department
See Census Bureau
See International Trade Administration
See National Institute of Standards and Technology
See National Oceanic and Atmospheric Administration
NOTICES
Agency information collection activities under OMB review, 40893

Committee for the Implementation of Textile Agreements
NOTICES
Cotton, wool, and man-made textiles:
Hong Kong, 40897

Commodity Futures Trading Commission
NOTICES
Contract market proposals:
Chicago Board of Trade—
National catastrophe insurance, etc., 40897

Defense Department
RULES
Drug abuse testing program; CFR Part removed, 40849
PROPOSED RULES
Federal Acquisition Regulation (FAR):
Plant equipment records, 40891

Education Department
NOTICES
Grants and cooperative agreements; availability, etc.:
Research in education of individuals with disabilities program, 40994

Employment and Training Administration
RULES
Alien crewmembers for longshoring activities in U.S. ports; attestations by employers, 40966

Employment Standards Administration
See Wage and Hour Division

Energy Department
See Federal Energy Regulatory Commission
See Hearings and Appeals Office, Energy Department
NOTICES
Grant and cooperative agreement awards:
Lawrence Livermore National Laboratory-Site 300, 40897
South Carolina Energy Research and Development Center-Clemson University, 40898

Environmental Protection Agency
PROPOSED RULES
Superfund program:
Toxic chemical release reporting; community right-to-know—
Acetophenone, etc., 41020
NOTICES
Agency information collection activities under OMB review, 40912
Water pollution control:
Clean Water Act—
Effluent guidelines development plan, 41000

Executive Office of the President
See Presidential Documents

Farm Credit Administration
NOTICES
Meetings; Sunshine Act, 40942

Farm Credit System Insurance Corporation
NOTICES
Assistance to operating insured system banks; policy statement, 40912

Federal Aviation Administration
RULES
Airworthiness directives:
Aerospatiale, 40835
British Aerospace, 40837
EMBRAER, 40838

Federal Communications Commission
RULES
Radio services, special:
Private land mobile services—
Specialized radio systems; elimination of separate licensing of end users, 40850
Television stations; table of assignments:
California, 40849
PROPOSED RULES
Common carrier services:
Satellite communications—
Below 1 GHz LEO Negotiated Rulemaking Committee; meetings, 40891
NOTICES
Agency information collection activities under OMB review, 40913

Federal Emergency Management Agency
NOTICES
Disaster and emergency areas:
Guam, 40914

Federal Energy Regulatory Commission
NOTICES
Electric rate, small power production, and interlocking directorate filings, etc.:
Boston Edison Co. et al., 40908
Hydroelectric applications, 40899–40906
Natural gas certificate filings:
Sioux Pointe Inc. et al., 40906
Applications, hearings, determinations, etc.:
ANR Pipeline Co., 40909
Equitrans, Inc., 40909
Mid Louisiana Gas Co., 40909
Mississippi River Transmission Corp., 40910
Stingray Pipeline Co., 40910
Texas Eastern Transmission Corp., 40910, 40911
Valero Interstate Transmission Co., 40911
Western Gas Interstate Co., 40911
Winnie Pipeline Co., 40911

Federal Highway Administration
RULES
Motor carrier safety standards:
Motor carrier safety assistance program, 40946

Federal Maritime Commission
NOTICES
Agreements filed, etc., 40914

Federal Railroad Administration
NOTICES
Exemption petitions, etc.:
Kansas City Southern Railway Co., 40940

Federal Reserve System
NOTICES
Meetings; Sunshine Act, 40942
Applications, hearings, determinations, etc.:
Fourth Financial Corp. et al., 40915
NBD Bancorp, Inc., 40915
Susquehanna Bancshares, Inc., et al., 40915

Federal Retirement Thrift Investment Board
NOTICES
Meetings; Sunshine Act, 40942

Food and Drug Administration
PROPOSED RULES
Human drugs:
Category II and III (OTC); active ingredients status list Correction, 40944

General Services Administration
PROPOSED RULES
Federal Acquisition Regulation (FAR):
Plant equipment records, 40891

Health and Human Services Department
See Alcohol, Drug Abuse, and Mental Health Administration
See Centers for Disease Control
See Food and Drug Administration
See Public Health Service
See Social Security Administration

Health Resources and Services Administration
See Public Health Service

Hearings and Appeals Office, Energy Department
NOTICES
Cases filed, 40898

Immigration and Naturalization Service
RULES
Nonimmigrant status:
Alien crewmen; labor disputes and authorized employment specifications; crewmen status denial, 40830

Indian Affairs Bureau
NOTICES
Tribal-State Compacts approval; Class III (casino) gambling:
Assiniboine and Sioux Tribes, MT, 41048

Interior Department
See Indian Affairs Bureau
See Land Management Bureau
See National Park Service

Internal Revenue Service
RULES
Income taxes:
Insurance companies; discounted unpaid losses, 40841
NOTICES
Senior Executive Service:
Performance Review Board; membership, 40940, 40941

International Trade Administration
NOTICES
Export trade certificates of review, 40894

International Trade Commission
NOTICES
Import investigations:
Dry film photoresist from Japan, 40922
Hairbrushes and parts and components from China, 40922
Integrated circuit telecommunication chips and products containing same, including dialing apparatus, 40922

Interstate Commerce Commission
RULES
Motor carriers:
Nonoperating carriers; undercharges collection, 40857
NOTICES
Railroad operation, acquisition, construction, etc.:
Bristol Industrial Terminal Railway, 40923
William E. Gardner & Railroad Acquisition Corp., 40923

Justice Department
See Immigration and Naturalization Service
NOTICES
Pollution control; consent judgments:
General Motors Corp., 40924

Labor Department
See Employment and Training Administration
See Wage and Hour Division
NOTICES
Grants and cooperative agreements; availability, etc.:
Nontraditional Employment for Women (NEW) Act demonstration programs, 41016

Land Management Bureau
NOTICES
Coal leases, exploration licenses, etc.:
Utah, 40920
Meetings:
Burley District Grazing Advisory Board, 40920
Salt Lake District Grazing Advisory Board, 40921

Legal Services Corporation
NOTICES
Meetings; Sunshine Act, 40942

National Aeronautics and Space Administration
RULES
Acquisition regulations:
Miscellaneous amendments, 40851
PROPOSED RULES
Federal Acquisition Regulation (FAR):
Plant equipment records, 40891

National Institute of Standards and Technology
NOTICES
Information processing standards, Federal:
Automated password generator, 40894
Meetings:
Advanced Technology Visiting Committee, 40896

National Oceanic and Atmospheric Administration
RULES
Endangered and threatened species:
Sea turtle conservation; shrimp trawling requirements—
North Carolina coast; tow time limitations, 40859
Southeastern Atlantic and Gulf of Mexico; conservation measures compliance, 40861
Fishery conservation and management:
U.S. nationals in Russian fisheries; fishery operations procedures
Reporting and recordkeeping requirements, 40858
PROPOSED RULES
National Weather Service modernization, 40877
NOTICES
Meetings:
South Atlantic Fishery Management Council, 40896

National Park Service
NOTICES
Environmental statements; availability, etc.:
Hanford Reach, Columbia River, WA, 40921
Meetings:
Native American Graves Protection and Repatriation Review Committee, 40921
National Register of Historic Places:
Pending nominations, 40921

National Science Foundation
NOTICES
Antarctic Conservation Act of 1978; permit applications, etc., 40924
Meetings:
Networking and Communications Research and Infrastructure Special Emphasis Panel, 40924

Postal Service
PROPOSED RULES
Domestic Mail Manual:
Postage meter rental agreements, 40890

Presidential Documents
PROCLAMATIONS
Special observances:
Childhood Cancer Month (Proc. 6469), 41051
Hispanic Heritage Month, National (Proc. 6468), 40827

Public Health Service
See Alcohol, Drug Abuse, and Mental Health Administration
See Centers for Disease Control
See Food and Drug Administration
NOTICES
Meetings:
National Vaccine Advisory Committee, 40917
Secretary's Council on Health Promotion and Disease Prevention, 40918

Securities and Exchange Commission
NOTICES
Self-regulatory organizations; proposed rule changes:
Options Clearing Corp., 40925
Pacific Stock Exchange, Inc., 40926
Philadelphia Stock Exchange, Inc., 40930
Applications, hearings, determinations, etc.:
Dean Witter American Value Fund et al., 40932
John Hancock Asset Allocation Fund et al., 40934

Social Security Administration
NOTICES
Social security acquiescence rulings:
Hickman v. Bowen; in-kind support and maintenance advances considered as loans; rescission, 40918
Social security rulings:
SSI loan policy; food and/or shelter advances, 40919

Textile Agreements Implementation Committee
See Committee for the Implementation of Textile Agreements

Transportation Department
See Federal Aviation Administration
See Federal Highway Administration
See Federal Railroad Administration
NOTICES
Aviation proceedings:
Hearings, etc.—
Bering Air, Inc., 40940

Treasury Department
See Alcohol, Tobacco and Firearms Bureau
See Internal Revenue Service

Veterans Affairs Department
RULES
Burial in national cemeteries; burial of unclaimed bodies of veterans
Correction, 40944

Wage and Hour Division
RULES
Alien crewmembers for longshoring activities in U.S. ports; attestations by employers, 40966

Separate Parts In This Issue

Part II
Department of Transportation, Federal Highway Administration, 40946

Part III
Department of Labor, Occupational Safety and Health Administration, 40966

Part IV
Department of Education, 40994

Part V
Environmental Protection Agency, 41000

Part VI
Department of the Treasury, Bureau of Alcohol, Tobacco and Firearms, 41006

Part VII
Department of Labor, 41016

Part VIII
Environmental Protection Agency, 41020

Part IX
Department of the Interior, Bureau of Indian Affairs, 41048

Part X
The President, 41051

Reader Aids
Additional information, including a list of public laws, telephone numbers, and finding aids, appears in the Reader Aids section at the end of this issue.

CFR PARTS AFFECTED IN THIS ISSUE

A cumulative list of the parts affected this month can be found in the Reader Aids section at the end of this issue.

3 CFR

Proclamations:

6468.....40827
6469.....41051

7 CFR

2.....40829

Proposed Rules:

319.....40872

8 CFR

214.....40830
251.....40830
258.....40830

14 CFR

39 (3 documents).....40835–40838

15 CFR

60.....40840

Proposed Rules:

946.....40877

20 CFR

655.....40966

21 CFR

Proposed Rules:

310.....40944

26 CFR

1.....40841

27 CFR

20.....40847

Proposed Rules:

4.....40884
5.....40884
250.....40885
251.....40886
252.....40887
290.....40889

29 CFR

506.....40966

32 CFR

60.....40849

36 CFR

Proposed Rules:

1191.....41006

38 CFR

3.....40944

39 CFR

Proposed Rules:

111.....40890

40 CFR

Proposed Rules:

372.....41020
721.....41020

47 CFR

73.....40849
90.....40850

Proposed Rules:

25.....40891

48 CFR

1801.....40851
1803.....40851
1804.....40851
1805.....40851
1806.....40851
1807.....40851
1808.....40851
1809.....40851
1813.....40851
1815.....40851
1816.....40851
1819.....40851
1822.....40851
1823.....40851
1825.....40851
1827.....40851
1831.....40851
1832.....40851
1833.....40851
1836.....40851
1837.....40851
1842.....40851
1845.....40851
1849.....40851
1851.....40851
1852.....40851
1853.....40851
1870.....40851

Proposed Rules:

45.....40891

49 CFR

350.....40946
355.....40946
396.....40946
1321.....40857

50 CFR

204.....40858
217 (2 documents).....40859, 40861
227 (2 documents).....40859, 40861
299.....40858

Federal Register
Vol. 57, No. 174
Tuesday, September 8, 1992

Presidential Documents

Title 3—

The President

Proclamation 6468 of September 2, 1992

National Hispanic Heritage Month, 1992

By the President of the United States of America

A Proclamation

Our Nation's Hispanic heritage is celebrated with an especially deep sense of pride during this 500th anniversary year of Christopher Columbus' first journey to the Americas. Today we celebrate a rich, diverse heritage that traces back to places as far-flung as Mexico and Peru. The Columbus Quincentenary thus provides a fitting historical perspective as we set aside this month in honor of the many outstanding contributions that persons of Spanish and Latin American descent have made to the United States.

While our Nation's history bears ample evidence of our Hispanic heritage, we cannot view that great heritage solely in terms of the past. Rather, it is a living legacy. Over the years Hispanic Americans have continued to take part in the social and economic development of the United States and in the defense of the ideals that unite all of our citizens. In this century alone, thousands of Hispanic Americans have answered the call to duty in places such as Bataan, Da Nang, and the Persian Gulf. Today persons of Spanish and Latin American descent are also demonstrating their love of freedom by reaping the rewards of opportunity and hard work. In the past decade, the number of Hispanic-owned businesses has increased by more than 80 percent. As always, Hispanic Americans are also contributing to our Nation through its very foundation: the family. Together with the support of their churches and communities, millions of Hispanic American families are preserving the traditional values on which our great Republic rests: values of faith, duty, devotion to friends and relatives, and respect and concern for others. As the 20-million-strong Hispanic American community continues to grow, these and other contributions to our country are sure to increase as well.

Because many Hispanic Americans maintain strong personal ties to the nations of Latin America and the Caribbean, this month we also celebrate the United States' growing partnership with our neighbors in the region. The expansion of democratic ideals in this hemisphere has enhanced cooperation and security throughout the Americas, and U.S. exports to Latin American countries have more than tripled since 1983, creating thousands of jobs and opportunities for our citizens. Through the Enterprise for the Americas Initiative, the United States is working with our Latin American and Caribbean neighbors to promote mutually beneficial progress in the areas of trade and investment. The achievement of a North American Free Trade Agreement, which Hispanic American organizations across the country are helping accomplish, will mark a major milestone in our efforts to expand markets for U.S. goods and services. As Hispanic Americans well know, by creating in this hemisphere a thriving market of some 360,000,000 consumers, we will generate hundreds of thousands of new jobs and opportunities.

Just as they have contributed so much to our Nation in the past, Hispanic Americans are now helping to lead the United States toward a bright future—one marked by opportunity and prosperity for every citizen here at home and by increasing cooperation and freedom throughout the hemisphere.

The Congress, by Joint Resolution approved September 17, 1968, as amended by Public Law 100–402, has authorized and requested the President to issue annually a proclamation designating the month beginning September 15 and ending October 15 as "National Hispanic Heritage Month."

NOW, THEREFORE, I, GEORGE BUSH, President of the United States of America, do hereby proclaim the month beginning September 15, 1992, and ending October 15, 1992, as National Hispanic Heritage Month. I invite all Americans to observe this month with appropriate programs and activities.

IN WITNESS WHEREOF, I have hereunto set my hand this second day of September, in the year of our Lord nineteen hundred and ninety-two, and of the Independence of the United States of America the two hundred and seventeenth.

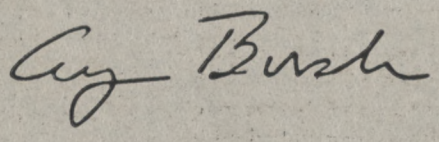

[FR Doc. 92–21652
Filed 9–3–92; 12:20 pm]
Billing code 3195–01–M

Rules and Regulations

Federal Register
Vol. 57, No. 174
Tuesday, September 8, 1992

This section of the FEDERAL REGISTER contains regulatory documents having general applicability and legal effect, most of which are keyed to and codified in the Code of Federal Regulations, which is published under 50 titles pursuant to 44 U.S.C. 1510.
The Code of Federal Regulations is sold by the Superintendent of Documents. Prices of new books are listed in the first FEDERAL REGISTER issue of each week.

DEPARTMENT OF AGRICULTURE

Office of the Secretary

7 CFR Part 2

Delegations of Authority by the Secretary of Agriculture and General Officers of the Department

AGENCY: Office of the Secretary, USDA.

ACTION: Final rule.

SUMMARY: This document amends the delegations of authority from the Secretary of Agriculture and the General Officers of the Department to delegate the authorities of the Secretary of Agriculture under the Food for Progress Act of 1985 and to address the responsibility of the General Sales Manager with respect to administration of section 416(b) of the Agricultural Act of 1949.

EFFECTIVE DATE: September 8, 1992.

FOR FURTHER INFORMATION CONTACT: Mary Chambliss, Foreign Agricultural Service, United States Department of Agriculture, 14th and Independence Avenue, SW., Washington, DC 20250–1400; telephone (202) 720–3573.

SUPPLEMENTARY INFORMATION: The Food for Progress Act of 1985, as amended by section 1516 of the Food, Agriculture, Conservation, and Trade Act of 1990, authorizes the President to enter into agreements with foreign governments, private voluntary organizations, nonprofit agricultural organizations, or cooperatives to furnish agricultural commodities in support of developing countries, and countries that are emerging democracies, that have made commitments to introduce or expand free enterprise elements in their agricultural economies. Agricultural commodities may be made available on a donation basis or on credit terms.

Executive Order No. 12752, dated February 25, 1991, delegated the President's authority under the Food for Progress Act of 1985 to the Secretary of Agriculture. The delegations of authority of the Department of Agriculture are amended to further delegate this authority to the Under Secretary for International Affairs and Commodity Programs and to the Administrator, Foreign Agricultural Service (FAS) and the Administrator, Agricultural Stabilization and Conservation Service.

The existing delegation of authority to the Administrator, FAS, provides that, on policy matters relating to certain specified activities, the General Sales Manager who reports to the Administrator, FAS, shall report to the Secretary of Agriculture through the Under Secretary for International Affairs and Commodity Programs. This provision is being revised to include reference to activities under the Food for Progress Act of 1985 and section 416(b) of the Agricultural Act of 1949.

This rule relates to internal agency management. Therefore, pursuant to 5 U.S.C. 553, notice of proposed rulemaking and opportunity for comment are not required, and this rule may be made effective less than 30 days after publication in the **Federal Register**. Further, since this rule relates to internal agency management, it is exempt from the provisions of Executive Order No. 12291. Finally, this action is not a rule as defined by the Regulatory Flexibility Act, Public Law 96–354, and, thus, is exempt from the provisions of that Act.

List of Subjects in 7 CFR Part 2

Authority delegations (Government agencies).

Accordingly, part 2, title 7, Code of Federal Regulations is amended as follows:

PART 2—DELEGATIONS OF AUTHORITY BY THE SECRETARY OF AGRICULTURE AND GENERAL OFFICERS OF THE DEPARTMENT

1. The authority citation for part 2 continues to read as follows:

Authority: 5 U.S.C. 301 and Reorganization Plan No. 2 of 1953.

Subpart C—Delegations of Authority to the Deputy Secretary, the Under Secretary for International Affairs and Commodity Programs, the Under Secretary for Small Community and Rural Development, and Assistant Secretaries

2. Section 2.21 is amended by adding a new paragraph (d)(35) to read as follows:

§ 2.21 Delegations of authority to the Under Secretary for International Affairs and Commodity Programs.

* * * * *

(d) * * *

(35) Administer programs under the Food for Progress Act of 1985 (7 U.S.C. 1736o).

* * * * *

Subpart H—Delegations of Authority by the Under Secretary for International Affairs and Commodity Programs

3. Section 2.65 is amended by revising the section heading and by adding a new paragraph (a)(42) to read as follows:

§ 2.65 Administrator, Agricultural Stabilization and Conservation Service.

(a) * * *

(42) Recommend the types and quantities of commodities which are available for programming under the Food for Progress Act of 1985, as amended (7 U.S.C. 1736o), and furnish commodities in connection therewith.

* * * * *

4. Section 2.68 is amended by revising the introductory text of paragraph (a) and adding a new paragraph (a)(38) to read as follows:

§ 2.68 Administrator, Foreign Agricultural Service.

(a) *Delegations.* Pursuant to § 2.21(d) and (f), subject to reservations in § 2.22(d), the following delegations of authority are made by the Under Secretary for International Affairs and Commodity Programs to the Administrator, Foreign Agricultural Service: *Provided,* That on policy matters relating to activities listed in paragraphs (a) (16) through (27), (35) and (38) of this section, the General Sales

Manager who reports to the Administrator, FAS, shall report to the Secretary, who is Chairman of the Board of Directors of the Commodity Credit Corporation, through the Under Secretary for International Affairs and Commodity Programs, who is president of the Commodity Credit Corporation:

* * *

* * * * *

(38) Administer programs under the Food for Progress Act of 1985 (7 U.S.C. 1736o), except as otherwise delegated in § 2.65(a)(42).

Dated: August 26, 1992.
For Subpart C:

Edward Madigan,
Secretary of Agriculture.

For Subpart H:

Randy Green,
Acting Under Secretary for International Affairs and Commodity Programs.

[FR Doc. 92-21463 Filed 9-4-92; 8:45 am]
BILLING CODE 3410-10-M

DEPARTMENT OF JUSTICE

Immigration and Naturalization Service

8 CFR Parts 214, 251, and 258

[INS No. 1418-92]

RIN 1115-AC42

Denial of Crewman Status in the Case of Certain Labor Disputes and Specifications of Authorized Employment

AGENCY: Immigration and Naturalization Service, Justice.

ACTION: Final rule.

SUMMARY: This rule implements sections 202 and 203 of the Immigration Act of 1990 (IMMACT 90) by placing certain restrictions on the admission and employment of alien crewmen during strikes and in their performance of longshore work. This rule is necessary to clarify the circumstances under which a nonimmigrant crewman may be employed in the United States and to implement those new restrictions contained in IMMACT 90.

EFFECTIVE DATE: This rule is effective September 8, 1992.

FOR FURTHER INFORMATION CONTACT: Michael T. Jaromin, Assistant Chief Inspector, Immigration and Naturalization Service, 425 I Street NW., room 7123, Washington, DC 20536, telephone number (202) 514-3275.

SUPPLEMENTARY INFORMATION: On June 6, 1991, at 56 FR 26016-26020, the Immigration and Naturalization Service (the Service) published an interim rule with request for comments by July 8, 1991, implementing sections 202 and 203 of the Immigration Act of 1990, Public Law 101-649, dated November 29, 1990. Subsequently, the comment period was extended until August 9, 1991. The interim rule clarified the circumstances under which nonimmigrant crewmen may perform duties incident to their nonimmigrant status while in the United States and provided implementing regulations for the new section 258 of the Immigration and Nationality Act concerning limitations on alien crewmen in performing longshore work. The interim rule was effective May 29, 1991, through December 31, 1991, with a final rule to be issued on or before the last effective date of the interim rule, and after the Service had an opportunity to review public and agency comments.

On July 10, 1991, at the request of interested parties, the Service published a notice in the **Federal Register** at 56 FR 31305, extending the comment period to August 9, 1991. The June 6, 1991 interim rule expired on December 31, 1991, and was later reinstated on February 21, 1992, through March 31, 1992 (57 FR 6183-6187).

On April 1, 1992, the Service extended the expiration date to June 30, 1992, (57 FR 10978) in order to review and consider the information and comments presented by the public on the June 6, 1991 interim rule. On July 1, 1992, the Service extended the expiration date of the interim rule to October 31, 1992, (57 FR 29193) in order to further evaluate the comments and to further coordinate this rule with the rule being published by the U.S. Department of Labor.

The Service received a number of well-reasoned, constructive suggestions during the comment period some of which have been incorporated into this final rule.

During the comment period, the Service received a total of 20 comments. All of the suggestions and opinions submitted by the commenters were carefully reviewed and given full consideration. The discussion that follows summarizes the issues that have been raised relating to the interim rule, provides the Service's position on the issues, and indicates the revisions adopted in the final rule as a result of those comments.

Labor Disputes

Two commenters stated that the National Mediation Board is the federal agency best able to provide timely information about airline labor disputes and suggested that the Service confer with the National Mediation Board to determine when a strike or lockout is in progress at a work site. This suggestion has been incorporated into this final rule.

One commenter stated that labor disputes need not originate in the employer's work site to trigger the prohibition against a company employing nonimmigrant crewmen during a labor dispute. The Service believes that the language of the statute, "where there is a strike or lockout in the bargaining unit of the employer in which the alien intends to perform such service," section 214(f)(1) of the Immigration and Nationality Act (the Act), 8 U.S.C. 1184(f)(1) (Supp. II 1991) requires a narrower interpretation than the commenter advocates. This narrower interpretation is reflected in the final rule.

Another commenter suggested that the rule should refer to fines that may be imposed against an airline or vessel for employing nonimmigrant crewmen during a strike, since refusal to allow the crewmen to land may be an ineffective deterrent to employing them. However, section 214 of the Act, as amended, does not authorize a fine for a violation of section 214(f)(1) of the Act. Instead, section 214(f) provides that such alien may not be paroled and is not considered a bona fide crewman under section 252(b) of the Act. The Service may not impose a fine that is not specifically authorized by statute. Therefore, this suggestion has not been incorporated into the rule.

One commenter suggested a detailed procedure for an airline to follow when a labor dispute is under way to ensure that only current employees as defined by the statute are allowed to work during the labor dispute; this procedure would include a union review of the process. The Service believes that its immigration officers will be able to screen crewmen arrivals accurately in strike situations to determine who are qualified current employees and who are not. Therefore, the Service will not incorporate the suggested procedure. The same commenter suggested that the rule state that even qualified current employees in crewman status are not allowed to work domestic flights during a strike. The Service agrees with this suggestion because the language of INA 101(a)(15)(D), 8 U.S.C. 1101(a)(15)(D) (Supp. II 1991) clearly refers to crewmen serving on vessels or aircraft originating outside the United States, and thus excludes D crewman from employment in connection with domestic flights or movements of a vessel or aircraft. This suggestion has therefore been incorporated into the rule.

The same commenter commends the rule's general restriction on alien crewmen being employed in connection with domestic flights or movements of

an aircraft. This rule retains the same language at 8 CFR 214.2(d)(1). However, this rule distinguishes domestic flights or movements of an aircraft from domestic stopovers of an aircraft on an international flight. When an aircraft of any United States carrier with an origin or destination point outside the United States has stopover rights, any alien crewmen performing crewmember duties on the flight may perform such duties through the stopover. This change reflects and is consistent with Department of Transportation regulations. It is also consistent with the longstanding position of the Service with regard to "D" crewmen performing crewmember duties through stopovers of international flights.

Another commenter suggested that discretionary parole for crewmen be allowed in compelling circumstances other than to protect the national security of the United States, when, for example, the health of the alien is at risk. The Service interprets the restriction on parole in section 214(f)(2) of the Act to mean that crewmen may be paroled into the United States for the purpose of performing crewmember duties only if such parole is necessary to protect the national security of the United States. However, the Service believes that district directors may continue to exercise their discretion to parole crewmen for other purposes including, for example, to receive medical treatment.

Another commenter remarked that the interim rule created a category of nonimmigrants who are exempt from the strikebreaker provision of the statute, namely, alien crewmen who are not already employees of the company. The Service disagrees with this interpretation. The interim rule stated that crewman status will be denied during a labor dispute to an alien who is not already an employee of the company. The same commenter stated that there is no rationale evident or provided for the exceptional treatment given to vessels of Canadian or British registry engaged in trade solely on the Great Lakes, as provided in § 251.1(a) of the interim rule. The basis for this treatment is contained in section 251 of the Act which provides that manifests shall be furnished for such vessels when the Attorney General requires it. It is established practice for Great Lakes vessels to be exempt from presentation of a manifest on each arrival in the United States unless the vessel has a change in nonimmigrant crewmen among those who are not British or Canadian citizens.

Arrival Manifests and Lists

Numerous commenters expressed concern that the lists required for the manifest, and the supporting documentation needed to invoke an exception to the prohibition against nonimmigrant crewmen doing longshore work, are unduly burdensome and unnecessary. The Service agrees and will retain only those requirements which it considers necessary to implement the statute and create records of accountability. For example, this rule will not require the listing of ports of call, except for vessels that will perform longshore work under the prevailing practice exception, and will not require the listing of crewmen who will perform the longshore work.

This rule also streamlines the documentation required to invoke an exception to the prohibition against crewmen performing longshore work. The hazardous cargo exception may be invoked, without attaching supporting documentation, by qualifying tankers and vessels carrying solid bulk hazardous cargo. Invoking the reciprocity exception requires one affidavit. Invoking the automated equipment exception requires only an annotation on the manifest.

Limitation on Performance of Longshore Work by Alien Crewmen

One commenter asked that the Service specify in the final rule that the activities of nonimmigrant crewmen aboard cruise vessels, which transport passengers rather than cargo, fall under exceptions or are exempt by definition from the longshore provisions of section 258 of the Act. With respect to the question of whether baggage and ships' stores are to be included in the meaning of the term "cargo," section 258 of the Act does not address this issue. The Service believes that since the term is not defined in the Act, it should be given its ordinary meaning for purposes of this regulation. "Cargo" is commonly defined as "the goods or merchandise conveyed in a ship, airplane, or vehicle," and is considered synonymous with "freight." Webster's Ninth New Collegiate Dictionary 208. This ordinary meaning would not include ships' stores or baggage. Thus, we conclude that had Congress wished to include the loading or unloading of ships' stores or baggage in the definition of "longshore work," it would have so specified. Since it did not, the Service will not deem baggage or ships' stores to be included in the term "cargo." With regard to longshore activities that are distinct from cargo loading and unloading, the Service's position is that immigration officers must make a determination on a case by case basis which exemptions, if any, apply to passenger vessels since such vessels are not exempted from compliance with section 258 of the Act.

Several commenters stated that § 258.2(c)(3) of the interim rule requiring that the master or agent present documentation showing that a majority of the ownership interest of the vessel is held by nationals of countries that do not prohibit longshore work by crewmen aboard U.S. vessels is impractical. The Service agrees that, with respect to many vessels, determining the nationality of a majority of ownership will not be an easy task. However, section 258(d)(1) of the Act requires that two conditions be met before the reciprocity exception can be used: The vessel must be registered in a "reciprocity country"; and a majority of the ownership interest must be held by nationals (not merely residents) of "reciprocity countries." This rule requires only an affidavit from the crewmen's employer or the vessel's owner to show that a majority of the ownership interest of the vessel has a qualifying nationality. Pursuant to the authority provided in section 235 of the Act, upon cause, an immigration inspector may require further documentation.

One commenter stated that both the Service and the Department of Labor (DOL) have written rules for unanticipated emergencies under which crewmen may perform longshore work. The commenter states that this is a duplication of rules, and if both agencies make determinations on the same unanticipated emergency, they may reach different conclusions. The Service and DOL regulations address different emergency situations. The DOL regulation addresses the situation described in section 258(c) of the Act when longshore work is done unexpectedly under the prevailing practice exception and, as a result, the master or agent of the vessel is unable to file an attestation with DOL 14 days in advance of the work as is required under normal circumstances. The Service regulation addresses circumstances in which no exception is applicable but which require immediate, essentially reflexive, action to avert possible damage, loss of property, injury, or death. The Service added this "imminent danger" provision as a protection for vessels against Service fines when unsanctioned longshore activities are performed under these narrow circumstances. Two commenters commended the inclusion of this provision and suggested that it be

broadened to include action taken to avert environmental contamination. This suggestion has been incorporated in this rule and § 258.3(e) has been revised to clarify the kinds of situations covered by the "imminent danger" provision.

One commenter noted that the Service did not define the term "port," though this term is essential in applying the prevailing practice exception. The DOL incorporates a definition of "port" in its regulation that the commenter states is unnecessarily comprehensive for INS purposes. After careful consideration of this comment, the Service concludes that the DOL definition of "port" most closely reflects the intent of Congress, as well as the usage of "port" in other parts of the Code of Federal Regulations. Hence, the Service adopts the definition of "port" as set forth in the DOL interim rule, to include a geographic area on a seacoast, lake, river, or other navigable body of water that is commonly regarded as a port by other government maritime-related agencies, such as the Maritime Administration.

One commenter stated that § 258.2(b)(4) of the rule suggests that the Service has the authority to assess fines for misrepresentations made by an employer in invoking the prevailing practice exception. The statute does not authorize such a fine. The language, "the sanction stated in section 258(c)(4)(E)(i) of the Act," was intended to refer to the Service's authority to prohibit landing. The rule has been amended to clarify this point.

In accordance with 5 U.S.C. 605(b), the Commissioner of the Immigration and Naturalization Service certifies that this rule does not have a significant adverse economic impact on a substantial number of small entities. This rule is not a major rule within the meaning of section 1(b) of E.O. 12291, nor does this rule have Federalism implications warranting the preparation of a Federalism Assessment in accordance with E.O. 12612.

The information collection requirement contained in this rule has been approved by the Office of Management and Budget (OMB) under the provisions of the Paperwork Reduction Act. The OMB control number for this collection is contained in 8 CFR 299.5.

List of Subjects

8 CFR Part 214

Administrative practice and procedure, Aliens.

8 CFR Part 251

Air carriers, Airmen, Aliens, Maritime carriers, Reporting and recordkeeping requirements, Seamen.

8 CFR Part 258

Aliens, Longshore work, Maritime carriers, Reporting and recordkeeping requirements, Seamen.

Accordingly, chapter I of title 8 of the Code of Federal Regulations is amended as follows:

PART 214—NONIMMIGRANT CLASSES

1. The authority citation for part 214 is revised to read as follows:

Authority: 8 U.S.C. 1101, 1103, 1182, 1184, 1186a, 1221, 1281, 1282; 8 CFR part 2.

2. In § 214.2, paragraph (d) is revised to read as follows:

§ 214.2 Special requirements for admission, extension, and maintenance of status.

* * * * *

(d) *Crewmen.* (1) The provisions of parts 251, 252, 253, and 258 of this chapter shall govern the landing of crewmen as nonimmigrants of the class defined in section 101(a)(15)(D) of the Act. An alien in this status may be employed only in a crewman capacity on the vessel or aircraft of arrival, or on a vessel or aircraft of the same transportation company, and may not be employed in connection with domestic flights or movements of a vessel or aircraft. However, nonimmigrant crewmen may perform crewmember duties through stopovers on an international flight for any United States carrier where such flight uses a single aircraft and has an origination or destination point outside the United States.

(2) *Denial of crewman status in the case of certain labor disputes (D nonimmigrants).* (i) An alien shall be denied D crewman status as described in section 101(a)(15)(D) of the Act if:

(A) The alien intends to land for the purpose of performing service on a vessel of the United States (as defined in 46 U.S.C. 2101(46)) or an aircraft of an air carrier (as defined in section 101(3) of the Federal Aviation Act of 1958); and

(B) A labor dispute consisting of a strike or lockout exists in the bargaining unit of the employer in which the alien intends to perform such service; and

(C) The alien is not already an employee of the company (as described in paragraph (d)(2)(iv) of this section).

(ii) *Refusal to land.* Any alien (except a qualified current employee as described in paragraph (d)(2)(iv) of this section) who the examining immigration officer determines has arrived in the United States for the purpose of performing service on board a vessel or an aircraft of the United States when a strike or lockout is under way in the bargaining unit of the employer, shall be refused a conditional landing permit under section 252 of the Act.

(iii) *Ineligibility for parole.* An alien described in paragraph (d)(2)(i) of this section may not be paroled into the United States under section 212(d)(5) of the Act for the purpose of performing crewmember duties unless the Attorney General determines that the parole of such alien is necessary to protect the national security of the United States. This paragraph does not prohibit the granting of parole for other purposes, such as medical emergencies.

(iv) *Qualified current employees.* (A) Paragraphs (d)(2)(i), (d)(2)(ii), and (d)(2)(iii) of this section do not apply to an alien who is already an employee of the owner or operator of the vessel or air carrier and who at the time of inspection presents true copies of employer work records which satisfy the examining immigration officer that the alien:

(*1*) Has been an employee of such employer for a period of not less than one year preceding the date that a strike or lawful lockout commenced;

(*2*) Has served as a qualified crewman for such employer at least once in three different months during the 12-month period preceding the date that the strike or lockout commenced; and

(*3*) Shall continue to provide the same crewman services that he or she previously provided to the employer.

(B) An alien crewman who qualifies as a current employee under this paragraph remains subject to the restrictions on his or her employment in the United States contained in paragraph (d)(1) of this section.

(v) *Strike or lockout determination.* These provisions will take effect if the Attorney General, through the Commissioner of the Immigration and Naturalization Service or his or her designee, after consultation with the National Mediation Board, determines that a strike, lockout, or labor dispute involving a work stoppage is in progress in the bargaining unit of the employer for whom the alien intends to perform such service.

* * * * *

PART 251—ARRIVAL MANIFESTS AND LISTS: SUPPORTING DOCUMENTS

3. The authority citation for part 251 is revised to read as follows:

Authority: 8 U.S.C. 1103, 1182, 1221, 1281, 1282.

4. In § 251.1, paragraphs (a) and (d) are revised to read as follows:

§ 251.1 Arrival manifests and lists.

(a) *Vessels.* (1) *General.* The master or agent of every vessel arriving in the United States from a foreign place or an outlying possession of the United States shall present to the immigration officer at the port where the immigration inspection is performed a manifest of all crewmen on board on Form I–418, Passenger List-Crew List, in accordance with the instructions contained thereon.

(2) *Longshore work notations.* The master of the vessel or his or her agent shall indicate in writing immediately below the name of the last alien listed on the Form I–418 whether or not D crewmen aboard the vessel will be used to perform longshore work at any United States port before the vessel departs the United States.

(i) If no longshore work will be performed, no further notation regarding longshore work is required.

(ii) If longshore work will be performed, the master or agent shall note which exception listed in section 258 of the Act permits the work. The exceptions are:

(A) The hazardous cargo exception;

(B) The prevailing practice exception in accordance with a port's collective bargaining agreements;

(C) The prevailing practice exception at a port where there is no collective bargaining agreement, but for which the vessel files an attestation;

(D) The prevailing practice exception for automated vessels; and

(E) The reciprocity exception.

(iii) If longshore work will be performed under the hazardous cargo exception, the vessel must either be a tanker or be transporting dry bulk cargo that qualifies as hazardous. All tankers qualify for the hazardous cargo exception, except for a tanker that has been gas-freed to load non-hazardous dry bulk commodities.

(A) To invoke the exception for tankers, the master or agent shall note on the manifest that the vessel is a qualifying tanker.

(B) If the vessel is transporting dry bulk hazardous cargo, the master or agent shall note on the manifest that the vessel's dry bulk cargo is hazardous and shall show the immigration officer the dangerous cargo manifest which is signed by the master or an authorized representative of the owner, and which under 46 CFR 148.02 must be kept in a conspicuous place near the bridge house.

(iv) If longshore work will be performed under the prevailing practice exception, the master or agent shall note on the manifest each port at which longshore work will be performed under this exception. Additionally, for each port the master or agent shall note either that:

(A) The practice of nonimmigrant crewmen doing longshore work is in accordance with all collective bargaining agreements covering 30 percent or more of the longshore workers in the port;

(B) The port has no collective bargaining agreement covering 30 percent or more of the longshore workers in the port and an attestation has been filed with the Secretary of Labor;

(C) An attestation that was previously filed is still valid and the vessel continues to comply with the conditions stated in that attestation; or

(D) The longshore work consists of operating an automated, self-unloading conveyor belt or a vacuum-actuated system.

(v) If longshore work will be performed under the reciprocity exception, the master or agent shall note on the manifest that the work will be done under the reciprocity exception, and will note the nationality of the vessel's registry and the nationality or nationalities of the holders of a majority of the ownership interest in the vessel.

(vi) *Notations for Great Lakes vessels.*

(A) A manifest shall not be required for a vessel of United States, Canadian, or British registry engaged solely in traffic on the Great Lakes or the St. Lawrence River and connecting waterways, herein designated as a Great Lakes vessel, unless nonimmigrant crewmen intend to do longshore work at a port in the United States.

(B) If nonimmigrant crewmen will do longshore work, the master of agent of the vessel shall note on the manifest which exception in section 258 of the Act permits the work and any other notations described in paragraphs (a)(2)(ii) through (a)(2)(v) of this section required by the exception invoked.

(C) A manifest shall be required for crewmen of other than United States, Canadian, or British citizenship and shall contain the same information regarding longshore work as is required of other vessels.

(D) After submission of a manifest on the first voyage of a calendar year, a manifest shall not be required on subsequent arrivals unless a nonimmigrant crewman of other than Canadian or British citizenship is employed on the vessel who was not aboard and listed on the last prior manifest, or a change has occurred regarding the performance of longshore work in the United States by nonimmigrant crewmen, or a change has occurred in the exception that the master or agent of the vessel wishes to invoke which was not noted on the last prior manifest.

(3) The master or agent of a vessel that only bunkers at a United States port pursuant to 8 CFR 235.1(d)(7) shall annotate Form I–418 to indicate the time, date, and place of bunkering.

(4) If documentation is required to support an exception, as described in 8 CFR 258.2, it must accompany the manifest.

* * * * *

(d) *Immigration officer notations on arrival manifests.* (1) Upon completion of the examination of each crewman listed on the Form I–418 presented by the master or agent of an arriving vessel, the immigration officer shall place one of the following symbols in column (5) of the Form I–418 opposite the name of the crewman: "USC" for a crewman admitted as a United States citizen; "RP" or "ARC" to indicate respectively the presentation of a reentry permit or an alien registration receipt card, Form I–151 or I–551, for a crewman admitted as a lawful permanent resident; "D–1" for an alien crewman granted a conditional landing permit under section 252(a)(1) of the Act; "D–2" for an alien crewman granted a conditional landing permit under section 252(a)(2) of the Act; "Parolee" for an alien crewman paroled pursuant to section 212(d)(5) of the Act; and "Refused" for a nonimmigrant crewman whose request for a landing permit has been refused.

(2) The immigration officer shall note on the Form I–410, Receipt for Crew List, whether or not nonimmigrant crewmen will perform longshore work in the United States, and if so:

(i) Under which exception in section 258 of the Act it will be performed; and

(ii) What type of documentation accompanied the manifest to support the exception invoked.

(3) The examining immigration officer shall sign his or her name, title, and the date of the inspection following the last entry on the Form I–418. The master of the vessel shall be furnished Form I–410 as a receipt for the Form I–418 arrival manifest, and the immigration officer shall list on the Form I–410 both the information regarding longshore work described in 8 CFR 251.1(a)(2) and the names of all crewmen who have been refused conditional landing permits.

5. Part 258 is revised to read as follows:

PART 258—LIMITATIONS ON PERFORMANCE OF LONGSHORE WORK BY ALIEN CREWMEN

Sec.
258.1 Limitations—General.
258.2 Exceptions.
258.3 Action upon arrival.

Authority: 8 U.S.C. 1101, 1103, 1281; 8 CFR part 2.

§ 258.1 Limitations—General.

(a) *Longshore work defined.* Longshore work means any activity relating to the loading and unloading of cargo, the operation of cargo-related equipment [whether or not integral to the vessel], and the handling of mooring lines on the dock when the vessel is made fast or let go, in the United States or the coastal waters thereof.

(1) Longshore work is not included in the term "normal operation and service on board a vessel" for the purposes of section 101(a)(15)(D)(i) of the Act except as provided in sections 258 (c) or (d) of the Act.

(2) A vessel that uses nonimmigrant crewmen to perform longshore work, other than the activities allowed in particular circumstances under § 258.2 (a)(2), (b), or (c) of this part, shall be subject to a fine under section 251(d) of the Act.

(b) *Port defined.* For purposes of this section, the term "port" means a geographic area, either on a seacoast, lake, river, or other navigable body of water, which contains one or more publicly or privately owned terminals, piers, docks, or maritime facilities, which is commonly regarded as a port by other government maritime related agencies, such as the Maritime Administration.

§ 258.2 Exceptions.

Any master or agent who uses nonimmigrant crewmen to perform longshore work at any United States port under the exceptions provided for in paragraphs (a)(2), (b), or (c) of this section must so indicate on the crew manifest and shall note under which exception the work will be performed.

(a) *Hazardous cargo.*

(1) The term "longshore work" does not include the loading and unloading of any cargo for which the Secretary of Transportation has prescribed regulations under authority contained in chapter 37 of title 46, United States Code, section 311 of the Federal Water Pollution Control Act, section 4106 of the Oil Pollution Act of 1990, or section 105 or 106 of the Hazardous Materials Transportation Act.

(2) In order to invoke the hazardous cargo exception for safety and environmental protection, the master or agent shall note on the manifest that the vessel is a qualifying tanker or carries hazardous dry bulk cargo.

(i) All tankers qualify for the hazardous cargo exception, including parcel tankers, except for a tanker that has been gas-freed to transport non-hazardous dry bulk commodities.

(ii) In order for a vessel to qualify for the hazardous cargo exception as a dry bulk hazardous cargo carrier, the master or agent must show the immigration officer the dangerous cargo manifest that is required by Coast Guard regulation 46 CFR 148.02–3(a) to be kept near the bridge house.

(b) *Prevailing practice exception.*

(1) Nonimmigrant crewmen may perform longshore work under this exception if:

(i) There is in effect in the local port one or more collective bargaining agreements, each covering at least 30 percent of the persons performing longshore work at the port, and each of which permits the longshore activity to be performed by the nonimmigrant crewman, or

(ii) There is no collective bargaining agreement in effect in the local port covering at least 30 percent of the persons performing longshore work at the port, and the employer of the crewmen has filed an attestation with the Secretary of Labor that the Secretary of Labor has accepted.

(2) *Documentation to be presented under the prevailing practice exception.*

(i) If the master or agent states on the manifest, Form I–418, that nonimmigrant crewmen will perform longshore work at a port under the prevailing practice exception as permitted by all collective bargaining agreements covering 30 percent or more of the persons performing longshore work at the port, then the master or agent must present to the examining immigration officer an affidavit from the local stevedore. The stevedore or a union representative of the employees' association must state on the affidavit that all bargaining agreements covering 30 percent or more of the longshore workers at the port allow nonimmigrant crewmen either to perform all longshore work or to perform those specified longshore activities that crewmen on the vessel intend to perform.

(ii) Where there is no collective bargaining agreement in effect at a port covering at least 30 percent of the persons who do longshore work, and the master or agent states on the manifest that nonimmigrant crewmen will perform such work under the prevailing practice exception, then the master or agent shall present a copy of the notification received from the Secretary of Labor that the attestation required for this exception has been accepted.

(iii) When an unanticipated emergency occurs, the master or agent of a vessel may file an attestation with the Secretary of Labor up to the date on which crewmen perform longshore work.

(A) If, because of an unanticipated emergency, crewmen on a vessel perform longshore work under the prevailing practice exception at a port, a revised manifest shall be submitted together with complete documentation, as specified in paragraph (b)(2)(ii) of this section, within 14 days of the longshore work having been done. Failure to present the required documentation may result in a fine under section 251 of the Act.

(B) All documents submitted after inspection shall be sent to the Immigration and Naturalization Service seaport office that inspected the vessel.

(iv) Attestations are valid for one year from the date of filing and cover nonimmigrant crewmen landing during that period if the master or agent states on the manifest that the vessel's crew continue to comply with the conditions in the attestation. When the vessel's master or agent intends to use a previously accepted attestation that is still valid, the master or agent shall submit a copy of the notification from the Secretary of Labor that the attestation was accepted and shall note on the manifest that the vessel continues to comply with the conditions of the attestation.

(3) *Use of automated self-unloading conveyor belt or vacuum-actuated system on a vessel.* An automated self-unloading conveyor belt or a vacuum-actuated system may be operated by a nonimmigrant crewman under the prevailing practice exception when no collective bargaining agreement at the local port prevents it. The master or agent is not required to file an attestation for nonimmigrant crewmen to perform such activity in such a circumstance unless the Secretary of Labor has determined that such activity is not the prevailing practice at that port, and has publicized this finding. When invoking this exception, the master or agent of the vessel shall annotate the manifest that the longshore work consists of operating a self-unloading conveyor belt or a vacuum-actuated system on the vessel under the prevailing practice exception.

(4) *Sanctions upon notification by the Secretary of Labor.* If the Immigration and Naturalization Service is notified by the Secretary of Labor that an entity has either misrepresented facts in its

attestation or has failed to meet a condition attested to, then the Immigration and Naturalization Service will take the necessary steps to prevent the landing of vessels owned or chartered by the offending entity in accordance with section 258(c)(E)(i) of the Act. The Service may also impose a sanction as provided in that section, including the prohibition of any vessel owned or chartered by the violating entity from landing at any United States port for up to one year.

(5) The three variations of the prevailing practice exception—collective bargaining agreement, attestation process, and automated equipment—are port specific. If a vessel is to use nonimmigrant crewmen to perform longshore work under the prevailing practice exception, the appropriate documentation required under paragraph (b)(2) of this section must be presented for each port at which the longshore work will be performed.

(c) *Reciprocity exception.* Nonimmigrant crewmen may perform longshore work in a United States port under this exception if:

(1) The vessel on which the crewmen serve is registered in a country that does not prohibit crewmen aboard United States vessels from performing longshore work, or a specified longshore activity, when United States vessels land in that country, as determined by the Secretary of State; and

(2) The master or agent presents an affidavit from the crewmen's employer or the vessel's owner that a majority of the ownership interest in the vessel is held by nationals of a country or countries that do not prohibit such longshore activity by crewmen aboard United States vessels when they land in those countries.

(d) *Vessels that qualify for multiple exceptions.* A vessel that qualifies for more than one exception under this section may invoke the exception that the master or agent chooses.

(e) *Lack of documentation required by an exception.* If a vessel invokes an exception to the prohibition against nonimmigrant crewmen performing longshore work, but lacks any documentation required to accompany the manifest when invoking the exception, then the vessel's crewmen shall not perform longshore work. If the longshore work is performed despite the lack of documentation that the immigration officer has noted on the Form I–410, then the vessel is subject to fine under section 251(d) of the Act.

§ 258.3 Action upon arrival.

(a) The master or agent of the vessel shall state on the manifest at the first port of entry:

(1) Whether or not nonimmigrant crewmen aboard the vessel will perform longshore work at any port before departing the United States; and

(2) If nonimmigrant crewmen will perform longshore work, which exception in section 258 of the Act permits them to do so.

(b) If nonimmigrant crewmen will perform longshore work, the master or agent of the vessel shall present with the manifest any documentation required by 8 CFR 258.2 for the exception invoked.

(c) If, at the time of inspection, the master or agent fails to present the documentation required for the exception invoked, then the vessel is prohibited from using nonimmigrant crewmen to perform longshore work. If crewmen aboard the vessel perform longshore work despite the prohibition, the vessel is subject to fine under section 251(d) of the Act.

(d) The examining immigration officer shall give the master or agent a Receipt for Crew List, Form I–410, on which the officer shall note whether or not nonimmigrant crewmen will do longshore work at any port of call and, if so, under which exception. The officer shall also note which documentation supporting the exception accompanied the manifest, and any failure to present documentation which failure would prohibit crewmen from performing longshore work under the exception that the vessel invoked.

(e) If a vessel's crewmen perform longshore activity not sanctioned by an exception but performed to prevent the imminent destruction of goods or property; severe damage to vessels, docks, or real estate; possible environmental contamination; or possible injury or death to a person, a concise report of the incident shall be made within 14 days of the incident to the Immigration and Naturalization Service seaport office that performed the inspection. If the Service agrees that the situation was one of imminent danger requiring immediate action, no fine will be imposed for the performance of a longshore activity in this isolated instance.

(f) Failure to deliver true and complete information on the manifest or any documentation required to support an exception may result in a fine against the owner, agent, consignee, master, or commanding officer under section 251(d) of the Act.

Dated: July 16, 1992.

Gene McNary,

Commissioner, Immigration and Naturalization Service.

[FR Doc. 92–21576 Filed 9–4–92; 8:45 am]

BILLING CODE 4410–10–M

DEPARTMENT OF TRANSPORTATION

Federal Aviation Administration

14 CFR Part 39

[Docket No. 91–NM–165–AD; Amendment 39–8349; AD 92–18–05]

Airworthiness Directives; Aerospatiale Model ATR42–300 and ATR42–320 Series Airplanes

AGENCY: Federal Aviation Administration, DOT.

ACTION: Final rule.

SUMMARY: This amendment adopts a new airworthiness directive (AD), applicable to certain Aerospatiale Model ATR42–300 and ATR42–320 series airplanes, that requires a one-time inspection of the main landing gear (MLG) fastener holes to detect fatigue cracks, and repair, if necessary; the installation of certain reinforcement fittings on certain structural components; and cold working of certain fastener holes. This amendment is prompted by fatigue testing by the manufacturer which has identified fatigue damage in the landing gear bay area in line with Frame 25 and Stringer 15. The actions specified by this AD are intended to prevent the collapse of the MLG.

DATES: Effective October 13, 1992.

The incorporation by reference of certain publications listed in the regulations is approved by the Director of the Federal Register as of October 13, 1992.

ADDRESSES: The service information referenced in this AD may be obtained from Aerospatiale, 316 Route de Bayonne, 31060 Toulouse, Cedex 03, France. This information may be examined at the Federal Aviation Administration (FAA), Transport Airplane Directorate, Rules Docket, 1601 Lind Avenue, SW., Renton, Washington; or at the Office of the Federal Register, 800 North Capitol Street, NW., suite 700, Washington, DC.

FOR FURTHER INFORMATION CONTACT: Gary Lium, Aerospace Engineer, Standardization Branch, ANM–113, FAA, Transport Airplane Directorate, 1601 Lind Avenue, SW., Renton, Washington 98055–4056; telephone (206) 227–1112; fax (206) 227–1320.

SUPPLEMENTARY INFORMATION: A proposal to amend part 39 of the Federal Aviation Regulations to include an airworthiness directive (AD) that is applicable to certain Aerospatiale Model ATR42–300 and ATR42–320 series airplanes was published in the **Federal Register** on October 4, 1991 (56 FR 50297). That action proposed to require a one-time inspection of the main landing gear (MLG) fastener holes to detect fatigue cracks, and repair, if necessary; the installation of certain reinforcement fittings on certain structural components; and cold working of certain fastener holes.

Interested persons have been afforded an opportunity to participate in the making of this amendment. Due consideration has been given to the comments received.

One commenter supports the proposed rule.

A second commenter requests that the FAA provide clarification in the final rule that each edition of Aerospatiale Service Bulletin ATR42–53–0043 that was released prior to Revision 3 incorrectly references in the "Reason" paragraph the installation of a doubler on Stringer 14. Revision 3 of the service bulletin corrects that reference to Stringer 15. The commenter also states that the maintenance records for airplanes modified prior to the service bulletin correction would indicate modification to Stringer 14, despite the fact that the modification can only be performed at Stringer 15. The commenter further explains that the modification is performed according to drawings and instructions in the service bulletin; and with no numbers or other markings on the stringers themselves, the error in numbering the stringers in the "Reason" paragraph of the service bulletin may not be noticed. The FAA concurs that the reference to Stringer 14 in earlier revisions of the service bulletin is confusing. A note has been placed in paragraph (a)(3) of the final rule to indicate that the reference to Stringer 14 is an error and that the required modification is actually performed at Stringer 15, as described in the Accomplishment Instructions of the service bulletin.

The same commenter submits that accomplishment of the actions described in any edition of Aerospatiale Service Bulletin ATR42–53–0043 that was issued prior to Revision 4 should be considered alternative methods of compliance with the AD. The commenter remarks that some operators may have already modified their fleets in accordance with one of these earlier versions of the service bulletin. The commenter also notes that Revisions 1 through 4 of that service bulletin contain changes that are not regarded as significant by the Direction Générale de l'Aviation Civile (DGAC) and Aerospatiale. The commenter adds that each of these revisions include phrases such as, "The changes introduced by this revision do not affect the operations or modification embodied on aircraft already delivered * * *" or "* * * do not affect the operations or modification kit already delivered." Lastly, the commenter notes that since an eddy current inspection is not introduced until Revision 3 of the service bulletin, the inspection should apply only to airplanes modified after receipt of Revision 3.

The FAA concurs. According to recent information received from Aerospatiale, the modifications proposed in the NPRM were developed for fatigue reasons as a result of the ATR42 full-scale fatigue test that was completed recently. Due to the difficulty and costs associated with accomplishing the required modifications, Aerospatiale has been performing the work for operators at one of two facilities located in the United States and Europe on airplanes prior to the accumulation of 10,000 landings. Aerospatiale and the French DGAC consider Revisions 3 and 4 of the service bulletin to include only minor changes. Aerospatiale has confirmed that airplanes modified previously in accordance with earlier revisions of the service bulletin need not be inspected or modified further. The final rule has been revised to include a paragraph stating that airplanes modified previously in accordance with service bulletin revisions issued prior to Revision 4 need not be inspected or modified further.

Paragraph (b) of the final rule has been revised to clarify the procedure for requesting alternative methods of compliance with this AD.

After careful review of the available data, including the comments noted above, the FAA has determined that air safety and the public interest require the adoption of the rule with the changes previously described. The FAA has determined that these changes will neither increase the economic burden on any operator nor increase the scope of the AD.

The FAA estimates that 77 airplanes of U.S. registry will be affected by this AD, that it will take approximately 82 work hours per airplane to accomplish the required actions, and that the average labor rate is $55 per work hour. Required parts will be supplied by the manufacturer at no cost to the operators. Based on these figures, the total cost impact of the AD on U.S. operators is estimated to be $347,270. This total cost figure assumes that no operator has yet accomplished the requirements of this AD.

The regulations adopted herein will not have substantial direct effects on the States, on the relationship between the national government and the States, or on the distribution of power and responsibilities among the various levels of government. Therefore, in accordance with Executive Order 12612, it is determined that this final rule does not have sufficient federalism implications to warrant the preparation of a Federalism Assessment.

For the reasons discussed above, I certify that this action (1) is not a "major rule" under Executive Order 12291; (2) is not a "significant rule" under DOT Regulatory Policies and Procedures (44 FR 11034, February 26, 1979); and (3) will not have a significant economic impact, positive or negative, on a substantial number of small entities under the criteria of the Regulatory Flexibility Act. A final evaluation has been prepared for this action and it is contained in the Rules Docket. A copy of it may be obtained from the Rules Docket at the location provided under the caption "**ADDRESSES.**"

List of Subjects in 14 CFR Part 39

Air transportation, Aircraft, Aviation safety, Incorporation by reference, Safety.

Adoption of the Amendment

Accordingly, pursuant to the authority delegated to me by the Administrator, the Federal Aviation Administration amends 14 CFR part 39 of the Federal Aviation Regulations as follows:

PART 39—AIRWORTHINESS DIRECTIVES

1. The authority citation for part 39 continues to read as follows:

Authority: 49 U.S.C. App. 1354(a), 1421 and 1423; 49 U.S.C. 106(g); and 14 CFR 11.89.

§ 39.13 [Amended]

2. Section 39.13 is amended by adding the following new airworthiness directive:

92–18–05 Aerospatiale: Amendment 39–8349. Docket 91–NM–165–AD.

Applicability: Model ATR42–300 and ATR42–320 series airplanes; as listed in Aerospatiale Service Bulletin ATR42–53–0043, Revision 4, dated April 30, 1991; certificated in any category.

Compliance: Required as indicated, unless accomplished previously. To prevent the collapse of the main landing gear, accomplish the following:

(a) Prior to the accumulation of 10,000 landings since new, or within 30 days after the effective date of this AD, whichever

occurs later, accomplish the following in accordance with Aerospatiale Service Bulletin ATR42–53–0043, Revision 4, dated April 30, 1991:

(1) Install a new machined reinforcement fitting (Modification 1281) on the left and right sides of the main landing gear (MLG) in accordance with the service bulletin.

(2) Perform a one-time eddy current inspection of the fastener holes on the left and right sides of the MLG to detect fatigue cracks in accordance with the service bulletin. If any cracks are found, prior to further flight, repair in accordance with the service bulletin.

(3) Install doublers on Stringer 15 at Frame 25 on the reinforcement plate in accordance with the service bulletin.

Note: Previous editions of this service bulletin erroneously referred to Stringer 15 as Stringer 14. The doubler can only be installed at Stringer 15.

(4) Perform cold working procedures of two fastener holes on the left and right sides of the MLG in accordance with the service bulletin.

(b) Airplanes modified prior to the effective date of this AD in accordance with earlier versions of Aerospatiale Service Bulletin ATR42–53–0043 issued prior to Revision 4 need not be inspected or modified further.

(c) An alternative method of compliance or adjustment of the compliance time that provides an acceptable level of safety may be used if approved by the Manager, Standardization Branch, ANM–113, FAA, Transport Airplane Directorate. Operators shall submit their requests through an appropriate FAA Principal Maintenance Inspector, who may add comments and then send it to the Manager, Standardization Branch.

Note: Information concerning the existence of approved alternative methods of compliance with this AD, if any, may be obtained from the Standardization Branch.

(d) Special flight permits may be issued in accordance with FAR 21.197 and 21.199 to operate the airplane to a location where the requirements of this AD can be accomplished.

(e) The installation, inspection, and cold working shall be done in accordance with Aerospatiale Service Bulletin ATR42–53–0043, Revision 4, dated April 30, 1991, which includes the following list of effective pages:

Page No.	Revision level	Date
1–2, 29	4	April 30, 1991.
3–6, 10–28, 30–32.	3	October 30, 1990.
7–9	Original	April 21, 1989.

This incorporation by reference was approved by the Director of the Federal Register in accordance with 5 U.S.C. 552(a) and 1 CFR Part 51. Copies may be obtained from Aerospatiale, 316 Route de Bayonne, 31060 Toulouse, Cedex 03, France. Copies may be inspected at the FAA, Transport Airplane Directorate, 1601 Lind Avenue, SW., Renton, Washington; or at the Office of the Federal Register, 800 North Capitol Street, NW., suite 700, Washington, DC.

(f) This amendment becomes effective on October 13, 1992.

Issued in Renton, Washington, on August 7, 1992.

Bill R. Boxwell,

Acting Manager, Transport Airplane Directorate, Aircraft Certification Service.

[FR Doc. 92–21475 Filed 9–4–92; 8:45 am]

BILLING CODE 4910–13–M

14 CFR Part 39

[Docket No. 92–NM–34–AD; Amendment 39–8354; AD 92–18–10]

Airworthiness Directives; British Aerospace Model ATP Series Airplanes

AGENCY: Federal Aviation Administration, DOT.

ACTION: Final rule.

SUMMARY: This amendment adopts a new airworthiness directive (AD), applicable to certain British Aerospace Model ATP series airplanes, that requires installation of an intercompressor case (ICC) fire detector system, and revises the Airplane Flight Manual (AFM) to include operating procedures associated with the ICC fire system. This amendment is prompted by reports of engine fires that originated from a bearing failure inside the ICC on Pratt and Whitney PW126 series engines. The actions specified by this AD are intended to prevent severe structural damage to the airplane resulting from an engine ICC fire.

DATES: Effective October 13, 1992.

The incorporation by reference of certain publications listed in the regulations is approved by the Director of the Federal Register as of October 13, 1992.

ADDRESSES: The service information referenced in this AD may be obtained from British Aerospace, PLC, Librarian for Service Bulletins, P.O. Box 17414, Dulles International Airport, Washington, DC 20041–0414. This information may be examined at the Federal Aviation Administration (FAA), Transport Airplane Directorate, Rules Docket, 1601 Lind Avenue, SW., Renton, Washington; or at the Office of the Federal Register, 800 North Capitol Street, NW., suite 700, Washington, DC.

FOR FURTHER INFORMATION CONTACT: Mr. William Schroeder, Aerospace Engineer, Standardization Branch, ANM–113, FAA, Transport Airplane Directorate, 1601 Lind Avenue, SW., Renton, Washington 98055–4056; telephone (206) 227–2148; fax (206) 227–1320.

SUPPLEMENTARY INFORMATION: A proposal to amend part 39 of the Federal Aviation Regulations to include an airworthiness directive (AD) that is applicable to certain British Aerospace Model ATP series airplanes was published in the **Federal Register** on June 23, 1992 (57 FR 27953). That action proposed to require installation of an intercompressor case (ICC) fire detector system, and a revision to the Airplane Flight Manual (AFM) to include operating procedures associated with the ICC fire system.

Interested persons have been afforded an opportunity to participate in the making of this amendment. No comments were submitted in response to the proposal or the FAA's determination of the cost to the public. The FAA has determined that air safety and the public interest require the adoption of the rule as proposed.

The FAA estimates that 10 airplanes of U.S. registry will be affected by this AD, that it will take approximately 9 work hours per airplane to accomplish the required installation actions, and approximately 1 work hour to revise the AFM, at an average labor rate of $55 per work hour. Required installation parts will cost approximately $985 per airplane. Based on these figures, the total cost impact of the AD on U.S. operators is estimated to be $15,350, or $1,535 per airplane. This total cost figure assumes that no operator has yet accomplished the requirements of this AD.

The regulations adopted herein will not have substantial direct effects on the States, on the relationship between the national government and the States, or on the distribution of power and responsibilities among the various levels of government. Therefore, in accordance with Executive Order 12612, it is determined that this final rule does not have sufficient federalism implications to warrant the preparation of a Federalism Assessment.

For the reasons discussed above, I certify that this action (1) is not a "major rule" under Executive Order 12291; (2) is not a "significant rule" under DOT Regulatory Policies and Procedures (44 FR 11034, February 26, 1979); and (3) will not have a significant economic impact, positive or negative, on a substantial number of small entities under the criteria of the Regulatory Flexibility Act. A final evaluation has been prepared for this action and it is contained in the Rules Docket. A copy of it may be obtained from the Rules Docket at the location provided under the caption "**ADDRESSES.**"

List of Subjects in 14 CFR Part 39

Air transportation, Aircraft, Aviation safety, Incorporation by reference, Safety.

Adoption of the Amendment

Accordingly, pursuant to the authority delegated to me by the Administrator, the Federal Aviation Administration amends 14 CFR part 39 of the Federal Aviation Regulations as follows:

PART 39—AIRWORTHINESS DIRECTIVES

1. The authority citation for part 39 continues to read as follows:

Authority: 49 U.S.C. App. 1354(a), 1421 and 1423; 49 U.S.C. 106(g); and 14 CFR 11.89.

§ 39.13 [Amended]

2. Section 39.13 is amended by adding the following new airworthiness directive:

92-18-10 British Aerospace: Amendment 39-8354. Docket 92-NM-34-AD.

Applicability: Model ATP series airplanes; serial numbers 2001 through 2045, inclusive; which have been modified in accordance with Pratt and Whitney Service Bulletin PW100-72-21097, dated November 8, 1991; certificated in any category.

Compliance: Required as indicated, unless accomplished previously.

To prevent severe structural damage to the airplane due to an internal engine fire within the intercompressor case, accomplish the following:

(a) Within 90 days after modification in accordance with Pratt and Whitney Service Bulletin PW100-72-21097, dated November 8, 1991, or within 90 days after the effective date of this AD, whichever occurs later:

(1) Install an intercompressor case (ICC) fire detector system, in accordance with British Aerospace Service Bulletin ATP-26-5-35225A, dated October 30, 1991.

(2) Revise Section 0.25.0 of the FAA-approved Airplane Flight Manual (AFM) to include the following statement. This may be accomplished by inserting a copy of this AD in the AFM.

Modification No.	Description
35225A	Introduction of ICC Fire Detector at the Intercompressor Case.

(3) Revise the FAA-approved AFM to include operating information pertaining to the ICC fire detection systems. This may be accomplished by inserting a copy of Temporary Revision No. T/24, Issue 1, dated February 17, 1992, into the AFM.

(b) An alternative method of compliance or adjustment of the compliance time that provides an acceptable level of safety may be used if approved by the Manager, Standardization Branch, ANM-113, FAA, Transport Airplane Directorate. Operators shall submit their requests through an appropriate FAA Principal Maintenance Inspector, who may add comments and then send it to the Manager, Standardization Branch, ANM-113.

Note: Information concerning the existence of approved alternative methods of compliance with this AD, if any, may be obtained from the Standardization Branch.

(c) Special flight permits may be issued in accordance with FAR 21.197 and 21.199 to operate the airplane to a location where the requirements of this AD can be accomplished.

(d) The installation and revision of the AFM shall be done in accordance with Temporary Revision No. T/24, Issue 1, dated February 17, 1992; and British Aerospace Service Bulletin ATP-26-5-35225A, dated October 30, 1991, which contains the following list of effective pages:

Page No.	Revision level	Date
1-7, 9, 11, 13, 15, 17, 19, 21, 23, 25, 27, 29, 31, 33, 35, 37, 39, 41, 43.	Original	Oct. 30, 1991.
8, 10, 12, 14, 16, 18, 20, 22, 24, 26, 28, 30, 32, 34, 36, 38, 40, 42.	(These pages are not used).	

This incorporation by reference was approved by the Director of the Federal Register in accordance with 5 U.S.C. 552(a) and 1 CFR Part 51. Copies may be obtained from British Aerospace, PLC, Librarian for Service Bulletins, P.O. Box 17414, Dulles International Airport, Washington, DC 20041-0414. Copies may be inspected at the FAA, Transport Airplane Directorate, 1601 Lind Avenue, SW., Renton, Washington; or at the Office of the Federal Register, 800 North Capitol Street, NW., suite 700, Washington, DC.

(e) This amendment becomes effective on October 13, 1992.

Issued in Renton, Washington, on August 12, 1992.

Bill R. Boxwell,

Acting Manager, Transport Airplane Directorate, Aircraft Certification Service.

[FR Doc. 92-21476 Filed 9-4-92; 8:45 am]

BILLING CODE 4910-13-M

14 CFR Part 39

[Docket No. 92-NM-152-AD; Amendment 39-8355; AD 92-16-51]

Airworthiness Directives; Empresa Brasileira de Aeronautica S.A. (EMBRAER) Model EMB-120 Series Airplanes

AGENCY: Federal Aviation Administration, DOT.

ACTION: Final rule; request for comments.

SUMMARY: This document publishes in the **Federal Register** an amendment adopting Airworthiness Directive (AD) T92-16-51 that was sent previously to all known U.S. owners and operators of EMBRAER Model EMB-120 series airplanes by individual telegrams. This AD requires repetitive visual checks or inspections to verify that the flight idle stop system circuit breakers are closed, and functional tests to determine if the backup flight idle stop system is operative. This amendment is prompted by a report of an overspeed condition that occurred on both engines of one airplane during flight; the fact that both of the circuit breakers in the backup flight idle stop system circuit were open may have contributed to this condition. The actions specified by this AD are intended to prevent an inoperative backup flight idle stop system and potential engine failure.

DATES: Effective September 23, 1992, to all persons except those persons to whom it was made immediately effective by telegraphic AD T92-16-51, issued July 29, 1992, which contained the requirements of this amendment.

The incorporation by reference of certain publications listed in the regulations is approved by the Director of the Federal Register as of September 23, 1992.

Comments for inclusion in the Rules Docket must be received on or before November 9, 1992.

ADDRESSES: Submit comments in triplicate to the Federal Aviation Administration (FAA), Transport Airplane Directorate, ANM-103, Attention: Rules Docket No. 92-NM-152-AD, 1601 Lind Avenue, SW., Renton, Washington 98055-4056.

The applicable service information may be obtained from EMBRAER Aircraft Corporation, 276 SW. 34th Street, Fort Lauderdale, Florida 33315. This information may be examined at the FAA, Transport Airplane Directorate, 1601 Lind Avenue, SW., Renton, Washington; or at the Atlanta Aircraft Certification Office, FAA, Small Airplane Directorate, 1669 Phoenix Parkway, Suite 210C, Atlanta, Georgia; or at the Office of the Federal Register, 800 North Capitol Street, NW., suite 700, Washington, DC.

FOR FURTHER INFORMATION CONTACT: Mr. Gil Carter, Aerospace Engineer, Propulsion Branch, ACE-140A, Atlanta Aircraft Certification Office, FAA, Small Airplane Directorate, 1669 Phoenix Parkway, suite 210C, Atlanta, Georgia 30349; telephone (404) 991-3810; fax (404) 991-3606.

SUPPLEMENTARY INFORMATION: On July 29, 1992, the FAA issued telegraphic AD T92–16–51, applicable to EMBRAER Model EMB–120 series airplanes, which requires repetitive visual checks, inspections, and functional checks to verify that the backup flight idle stop system is operating properly.

That action was prompted by a recent report indicating that, during a landing approach, an operator of an EMBRAER Model EMB–120 series airplane experienced an overspeed condition on both engines, apparently due to movement of the power levers below flight idle. The overspeed of the left engine reached 150% and the engine failed; the overspeed of the right engine rose to 120%. The incident occurred approximately six miles out, while the airplane was encountering severe air turbulence. Investigation revealed that both of the circuit breakers in the backup flight idle stop system circuit on the airplane were open.

The cause of the incident has not yet been determined. However, there are several items being considered: (1) Certain latent failure modes exist in the backup flight idle stop system that could render it inoperative, and an inoperative system is not annunciated to the flight crew; or (2) normal maintenance action could have led to the opening of the circuit breakers.

This condition, if not corrected, could result in an inoperative backup flight idle stop system, which could lead to possible engine failure.

EMBRAER previously had issued Service Bulletin 120–076–0009, Change No. 4, dated November 1, 1990, which describes procedures to install a flight idle position electrical lock to the power control bellcrank. This installation minimizes the possibility of setting the power control levers to angles below flight idle during flight. [Installation of such a device is the subject of AD 90–17–12, amendment 39–6696 (55 FR 33107, August 14, 1990).]

This airplane model is manufactured in Brazil and is type certificated for operation in the United States under the provisions of Section 21.29 of the Federal Aviation Regulations and the applicable bilateral airworthiness agreement.

Since the unsafe condition described is likely to exist or develop on other airplanes of the same type design registered in the United States, the FAA issued Telegraphic AD T92–16–51 to prevent an inoperative backup flight idle stop system and potential engine failure. The AD requires repetitive visual checks or inspections to verify that both flight idle stop circuit breakers for engine 1 and 2 are closed. For airplanes on which an inspection window has been installed on the left lateral console panel that permits visibility of the flight idle stop solenoid circuit breakers, a flight crew member may perform a visual check to make this verification. However, for airplanes without such an installation, a visual inspection must be accomplished by a rated mechanic.

The AD also requires repetitive functional tests to determine whether the backup flight idle stop system is operative. Depending upon what discrepancies are found, an inoperative system must either be restored to the configuration specified in the EMBRAER service bulletin described previously, or repaired in accordance with the EMB–120 maintenance manual.

Additionally, this AD requires that operators submit a report of their initial findings to the FAA.

This is considered to be interim action until final action is identified, at which time the FAA may consider further rulemaking.

Since it was found that immediate corrective action was required, notice and opportunity for prior public comment thereon were impracticable and contrary to the public interest, and good cause existed to make the AD effective immediately by individual telegrams issued on July 29, 1992, to all known U.S. owners and operators of EMBRAER Model EMB–120 series airplanes. These conditions still exist, and the AD is hereby published in the **Federal Register** as an amendment to § 39.13 of part 39 of the Federal Aviation Regulations (FAR) to make it effective as to all persons.

Comments Invited

Although this action is in the form of a final rule that involves requirements affecting flight safety and, thus, was not preceded by notice and an opportunity for public comment; comments are invited on this rule. Interested persons are invited to comment on this rule by submitting such written data, views, or arguments as they may desire. Communications shall identify the Rules Docket number and be submitted in triplicate to the address specified under the caption **"ADDRESSES."** All communications received on or before the closing date for comments will be considered, and this rule may be amended in light of the comments received. Factual information that supports the commenter's ideas and suggestions is extremely helpful in evaluating the effectiveness of the AD action and determining whether additional rulemaking action would be needed.

Comments are specifically invited on the overall regulatory, economic, environmental, and energy aspects of the rule that might suggest a need to modify the rule. All comments submitted will be available, both before and after the closing date for comments, in the Rules Docket for examination by interested persons. A report that summarizes each FAA-public contact concerned with the substance of this AD will be filed in the Rules Docket.

Commenters wishing the FAA to acknowledge receipt of their comments submitted in response to this notice must submit a self-addressed, stamped postcard on which the following statement is made: "Comments to Docket Number 92–NM–152–AD." The postcard will be date stamped and returned to the commenter.

The regulations adopted herein will not have substantial direct effects on the States, on the relationship between the national government and the States, or on the distribution of power and responsibilities among the various levels of government. Therefore, in accordance with Executive Order 12612, it is determined that this final rule does not have sufficient federalism implications to warrant the preparation of a Federalism Assessment.

The FAA has determined that this regulation is an emergency regulation and that it is not considered to be major under Executive Order 12291. It is impracticable for the agency to follow the procedures of Order 12291 with respect to this rule since the rule must be issued immediately to correct an unsafe condition in aircraft. It has been determined further that this action involves an emergency regulation under DOT Regulatory Policies and Procedures (44 FR 11034, February 26, 1979). If it is determined that this emergency regulation otherwise would be significant under DOT Regulatory Policies and Procedures, a final regulatory evaluation will be prepared and placed in the Rules Docket. A copy of it, if filed, may be obtained from the Rules Docket at the location provided under the caption **"ADDRESSES."**

List of Subjects in 14 CFR Part 39

Air transportation, Aircraft, Aviation safety, Incorporation by reference, Safety.

Adoption of the Amendment

Accordingly, pursuant to the authority delegated to me by the Administrator, the Federal Aviation Administration amends 14 CFR part 39 of the Federal Aviation Regulations as follows:

PART 39—AIRWORTHINESS DIRECTIVES

1. The authority citation for part 39 continues to read as follows:

Authority: 49 U.S.C. App. 1354(a), 1421 and 1423; 49 U.S.C. 106(g); and 14 CFR 11.89.

§ 39.13 [Amended]

2. Section 39.13 is amended by adding the following new airworthiness directive:

92–16–51 Embraer: Amendment 39–8355. Docket 92–NM–152–AD.

Applicability: All Model EMB–120 series airplanes, certificated in any category.

To prevent an inoperative backup flight idle stop system and potential engine failure, accomplish the following:

(a) Within 5 days after the effective date of this AD, and thereafter prior to the first flight of each day, accomplish paragraph (a)(1) or (a)(2) of this AD, as applicable:

(1) For airplanes on which an inspection window has been installed on the left lateral console panel that permits visibility of the flight idle stop solenoid circuit breakers: Using an appropriate light source, perform a visual check to verify that both "FLT IDLE STOP SOL" circuit breakers CB0582 and CB0583 for engine 1 and engine 2 are closed.

Note 1: This check may be performed by a flight crew member.

Note 2: Instructions for installation of an inspection window can be found in EMBRAER Information Bulletin 120–076–0003, dated November 19, 1991; or EMBRAER Service Bulletin 120–076–0014, dated July 29, 1992.

(2) For airplanes on which an inspection window has not been installed on the left lateral console panel: Perform a visual inspection to verify that both "FLT IDLE STOP SOL" circuit breakers CB0582 and CB0583 for engine 1 and engine 2 are closed.

(b) As a result of the check or inspection performed in accordance with paragraph (a) of this AD: If circuit breakers CB0582 and CB0583 are not closed, prior to further flight, reset them and perform the functional test specified in paragraph (c) of this AD.

(c) Within 5 days after the effective date of this AD and thereafter at intervals not to exceed 75 hours time-in-service, or immediately following any maintenance action where the power levers are moved with the airplane on jacks, conduct a functional test of the backup flight idle stop system for engine 1 and engine 2 by performing the following steps:

(1) Move both power levers to the "MAX" position.

(2) Turn the aircraft power select switch on.

(3) Open both "AIR/GROUND SYSTEM" circuit breakers CB0283 and CB0286 to simulate in-flight conditions with weight-off-wheels. Wait for at least 15 seconds, then move both power levers back toward the propeller reverse position with the flight idle gate triggers raised. Verify that the power lever for each engine cannot be moved below the flight idle position, even though the flight idle gate trigger on each power lever is raised.

(4) If the power lever can be moved below the flight idle position, prior to further flight, restore the backup flight idle stop system to the configuration specified in EMBRAER Service Bulletin 120–076–0009, Change No. 4, dated November 1, 1990, and perform a functional test.

Note: If the power lever can be moved below flight idle, this indicates that the backup flight idle stop system is inoperative.

(5) Move both power levers to the "MAX" position.

(6) Close both "AIR/GROUND SYSTEM" circuit breakers CB0283 and CB0286. Wait for at least 15 seconds, then move both power levers back toward the propeller reverse position with the flight idle gate triggers raised. Verify that the power lever for each engine can be moved below the flight idle position.

(7) If either or both power levers cannot be moved below the flight idle position, prior to further flight, inspect the backup flight idle stop system and the flight idle gate system, and accomplish either paragraph (c)(7)(i) or (c)(7)(ii) of this AD, as applicable:

(i) If the backup flight idle stop system is failing to disengage with weight-on-wheels, prior to further flight, restore the system to the configuration specified in EMBRAER Service Bulletin 120–076–0009, Change No. 4, dated November 1, 1990.

(ii) If the flight idle gate system is failing to open even though the trigger is raised, prior to further flight, repair in accordance with the EMBRAER Model EMB–120 maintenance manual.

(8) Turn the power select switch off. The functional test is completed.

(d) Within 10 days after accomplishing the initial visual inspection/check and initial functional test required by paragraphs (a) and (c) of this AD, report the results of those tests, positive or negative, to the Manager, Atlanta Aircraft Certification Office (ACO), FAA, Small Airplane Directorate, 1669 Phoenix Parkway, Suite 210C, Atlanta, Georgia 30349; fax (404) 991–3606. Information collection requirements contained in this regulation have been approved by the Office of Management and Budget (OMB) under the provisions of the Paperwork Reduction Act of 1980 (44 U.S.C. 3501 *et seq.*) and have been assigned OMB Control Number 2120–0056.

(e) An alternative method of compliance or adjustment of the compliance time that provides an acceptable level of safety may be used if approved by the Manager, Atlanta ACO, FAA, Small Airplane Directorate. Operators shall submit their requests through an appropriate FAA Principal Maintenance Inspector, who may add comments and then send it to the Manager, Atlanta ACO.

Note: Information concerning the existence of approved alternative methods of compliance with this AD, if any, may be obtained from the Atlanta ACO.

(f) Special flight permits may be issued in accordance with FAR 21.197 and 21.199 to operate the airplane to a location where the requirements of this AD can be accomplished.

(g) The restoration procedure shall be done in accordance with EMBRAER Service Bulletin 120–076–0009, Change No. 4, dated November 1, 1990. This incorporation by reference was approved by the Director of the Federal Register in accordance with 5 U.S.C. 552(a) and 1 CFR part 51. Copies may be obtained from EMBRAER Aircraft Corporation, 276 SW. 34th Street, Fort Lauderdale, Florida 33315. Copies may be inspected at the FAA, Transport Airplane Directorate, 1601 Lind Avenue, SW., Renton, Washington; or at the Atlanta Aircraft Certification Office (ACO), FAA, Small Airplane Directorate, 1669 Phoenix Parkway, Suite 210C, Atlanta, Georgia; or at the Office of the Federal Register, 800 North Capitol Street, NW., Suite 700, Washington, DC.

(h) This amendment becomes effective on September 23, 1992, to all persons except those persons to whom it was made immediately effective by telegraphic AD T92–16–51, issued July 29, 1992, which contained the requirements of this amendment.

Issued in Renton, Washington, on August 12, 1992.

Bill R. Boxwell,

Acting Manager, Transport Airplane Directorate, Aircraft Certification Service.

[FR Doc. 92–21477 Filed 9–4–92; 8:45 am]

BILLING CODE 4910–13–M

DEPARTMENT OF COMMERCE

Bureau of the Census

15 CFR Part 60

[Docket No. 920240–2040]

Public Information

AGENCY: Bureau of the Census, Commerce.

ACTION: Final rule.

SUMMARY: The Bureau of the Census is amending its rule at 15 CFR, part 60, to repeal its existing guidelines for the disclosure of information to the public, and to refer any subsequent inquiries to 15 CFR part 4. The purpose of this rule-making notice is to implement updated policies and procedures for handling public requests for materials pursuant to the requirements of the Freedom of Information Act (FOIA), 5 U.S.C. 552, as amended.

EFFECTIVE DATE: September 8, 1992.

FOR FURTHER INFORMATION CONTACT: J. Patrick Heelen, Deputy Chief Counsel, Bureau of the Census, U.S. Department of Commerce, Federal Building 3, room 3077, Washington, DC 20233, (301) 763–2818.

SUPPLEMENTARY INFORMATION: 15 CFR, part 60, contains outdated information. The information found in 15 CFR, part 4, which is the Department of Commerce's rules on FOIA procedures, provides a more updated explanation of the scope, purpose, policies, and guidelines for

making publicly available certain records as specified in 5 U.S.C. 552(a)(2) and 552(a)(3). As part of the Department of Commerce, the Bureau of the Census follows the rules set forth in 15 CFR part 4.

The Bureau of the Census finds good cause to dispense with the notice and comment and delayed effective date requirements of the Administrative Procedures Act (APA) for this rule. These APA requirements are unnecessary because the Bureau of the Census is deleting superseded regulations and substituting a cross-reference for currently operating regulations.

Since a notice and an opportunity for comment are not required to be given for the rule under section 533 of the APA (5 U.S.C. 533) or any other law, under sections 603(a) and 604(a) of the Regulatory Flexibility Act (5 U.S.C. 603(a) and 604(a)), no initial or final Regulatory Flexibility analysis has to be or will be prepared.

List of Subjects in 15 CFR Part 60

Freedom of information.

PART 60—PUBLIC INFORMATION

1. The Authority citation is revised to read as follows:

Authority: 5 U.S.C. 301, 552, 553, Reorganization Plan No. 5 of 1950; 31 U.S.C. 3717.

§§ 60.2–60.11 [Removed]

2. Part 60 is amended by removing §§ 60.2 through 60.11, and by revising § 60.1 to read as follows:

§ 60.1 Public information.

The rules and procedures regarding public access to the records of the Bureau of the Census are found at 15 CFR part 4.

Date: September 2, 1992.

Barbara Everitt Bryant,

Director, Bureau of the Census.

[FR Doc. 92–21522 Filed 9–4–92; 8:45 am]

BILLING CODE 3510–07–M

DEPARTMENT OF THE TREASURY

Internal Revenue Service

26 CFR Part 1

[T.D. 8433]

RIN 1545–AJ51

Discounted Unpaid Losses

AGENCY: Internal Revenue Service, Treasury.

ACTION: Final regulations.

SUMMARY: This document contains final regulations relating to the discounting of unpaid losses of insurance companies for federal income tax purposes. Changes to the applicable law were made by the Tax Reform Act of 1986. The regulations affect insurance companies and provide the guidance needed to comply with these changes.

EFFECTIVE DATE: The regulations are effective for taxable years beginning after December 31, 1986.

FOR FURTHER INFORMATION CONTACT: Katherine A. Hossofsky, (202) 622–3970 (not a toll-free call) or Ann H. Logan, (202) 622–3970 (not a toll-free call).

SUPPLEMENTARY INFORMATION:

Background

This document sets forth final income tax regulations relating to the discounting of unpaid losses under section 846 of the Internal Revenue Code. Section 846 was added to the Code by section 1023(c) of the Tax Reform Act of 1986 (100 Stat. 2399). Proposed regulations under section 846 were published in the **Federal Register** on May 2, 1991 (56 FR 20161). Written comments were received from the public and a public hearing was held on September 24, 1991. Guidance on certain issues relating to section 846 was provided in Notice 88–100, 1988–2 C.B. 439.

Explanation of Provisions

The deduction for losses incurred provided to property and casualty insurance companies under section 832(b)(5)(A) of the Code takes into account changes in the amount of discounted unpaid losses for contracts other than life insurance contracts. In addition, section 807(c) requires life insurance companies to discount unpaid losses (other than losses on life insurance contracts) for purposes of sections 807(c)(2) and 805(a)(1). Section 846 provides rules for the discounting of unpaid losses. These regulations provide guidance on certain issues arising under section 846.

Requirements for Election To Use Own Experience

Although taxpayers generally must discount unpaid losses using the loss payment patterns determined by the Secretary and published by the Internal Revenue Service (Service), section 846(e) allows a taxpayer to elect to discount unpaid losses using the company's own historical loss payment pattern. Under section 846(e), the taxpayer's loss payment pattern must be determined using the information provided on the most recent annual statement filed before the beginning of the accident year for which the loss payment pattern is computed. The election is made separately for each determination year (1987 and each fifth calendar year thereafter) and applies to all of the taxpayer's lines of business that are eligible lines during the determination year. Section 846(e)(4) directs the Secretary to provide that the election is not available for a line of business for which the taxpayer does not have sufficient historical experience to determine a loss payment pattern.

The proposed regulations provided that a taxpayer's election to compute discounted unpaid losses based on its own historical loss payment pattern would apply to a line of business only if the taxpayer, on its most recent annual statement filed before the beginning of the determination year, reported unpaid losses for that line of business for at least the number of accident years for which unpaid losses in that line are required to be separately reported on the annual statement.

Commentators have suggested that the "unpaid losses" standard is not the appropriate criterion for determining whether a taxpayer has sufficient historical experience in a line of business. A taxpayer with sufficient historical experience in a line of business could nevertheless report on its annual statement no unpaid losses for one or more of the requisite accident years. This could occur if, for a particular accident year, all of the losses incurred in a line of business have been paid.

In response to these comments, the final regulations provide that a taxpayer's election to compute discounted unpaid losses based on its own historical payment pattern generally will apply to a line of business if the taxpayer, on its most recent annual statement filed before the beginning of the determination year, reports "losses and loss expenses incurred" for that line of business for at least the number of accident years for which losses and loss expenses incurred in that line are required to be separately stated. Further, in recognition of the need for flexibility to adapt to changes in business practice or annual statement presentation, the final regulations provide that for the 1992 and subsequent determination years a line of business will also be considered an eligible line of business if it satisfies conditions set forth in other published guidance provided by the Service. In connection with the finalization of these regulations, the Service is publishing Rev. Proc. 92–76, 1992–38 I.R.B. to

address certain situations that have been identified in comments. Taxpayers may provide the Service with data concerning lines of business and loss payment patterns to enable the Service to determine if additional guidance is warranted.

The final regulations include a transition rule for the 1987 determination year. The transition rule, which was initially published in Notice 88–100, provides that a taxpayer has sufficient historical experience for a line of business for the 1987 determination year if the taxpayer reports written premiums for at least the number of accident years for which unpaid losses for that line are required to be separately reported on the annual statement. The transition rule is not adopted for determination years after 1987 because a taxpayer may write premiums for several accident years before having unpaid losses relating to those premiums. Thus, the transition rule does not provide adequate assurance of the availability of loss payment information for each of those accident years to warrant its adoption as a final rule.

Notice 88–100 also required that the amount of unpaid losses a taxpayer reports on its annual statement for a line of business be equal to or greater than the amounts reported by at least 10 percent of all other companies that report unpaid losses for that line of business. The final regulations do not adopt this rule because of its potentially adverse impact on small companies and because determination of the 10th percentile threshold amount was administratively burdensome for taxpayers.

Anti-Abuse Rules

Section 846(e)(4)(B) directs the Secretary to issue regulations to prevent the avoidance (through the use of separate corporations or otherwise) of the requirement that the election to use historical loss payment patterns apply to all lines of business of a taxpayer. In response to commentators' requests for an expansion of the lines of business eligible for the historical loss experience election, the final regulations adopt a less restrictive criterion for determining whether a taxpayer has sufficient historical experience in a line of business and authorize further guidance to expand the definition of eligible lines of business. In view of this liberalization, safeguards are provided to prevent the avoidance of the requirement that the election apply to all eligible lines through the use of reinsurance agreements or separate corporations. Specifically, the final regulations provide that the district director may (1) nullify a taxpayer's election to compute discounted unpaid losses based on its historical loss payment pattern, (2) adjust a taxpayer's historical loss payment pattern, or (3) make other proper adjustments, to prevent avoidance of the requirement of section 846 that the election apply to all eligible lines of business of a taxpayer.

Determination of Discount Tables To Be Used

The final regulations generally provide for application of a composite schedule of discount factors to unpaid losses of a line of business for which the Service has not published discount factors.

Rev. Proc. 91–21, 1991–1 C.B. 525, provided an administrative procedure under which certain taxpayers could elect to use composite discount factors for unpaid losses on certain insurance contracts written on a claims-made basis. Neither the revenue procedure nor the final regulations permit this election for unpaid losses attributable to the 1992 accident year or any subsequent accident year.

If the groupings of individual lines of business on the annual statement change, taxpayers must discount unpaid losses on the resulting lines of business using the discounting patterns that would have applied to those unpaid losses based on their annual statement classification prior to the change. This is appropriate because the Service has published discount factors based on the classification of unpaid losses on the most recent annual statement filed before the beginning of the determination year.

In certain cases, the final regulations specify other factors that must be applied to unpaid losses for which the Service has not published discount factors. For example, for purposes of discounting unpaid losses from nonproportional reinsurance for accident years after 1991, the proposed regulations are modified to reflect changes in the information required on the annual statement. As a result of the additional information contained in the 1990 annual statement, the Secretary is able to calculate discount tables from nonproportional reinsurance for short-tailed lines of business, long-tailed lines of business, and financial guarantee/surety type business.

The final regulations also provide that the 90 percent rule applies to reinsurance and international business for all accident years. The 90 percent rule requires that reinsurance which is not allocated to a specific line of business must nonetheless be discounted using the factors associated with that line of business if 90 percent of the unallocated unpaid losses relate to underlying line of business.

Fresh Start

The final regulations adopt with one modification the rules contained in the proposed regulations concerning the computation of the "fresh start" provided by section 1023(e)(3) of the Tax Reform Act of 1986 (the Act). The fresh start provides a double deduction by allowing a taxpayer to not take into account the difference between undiscounted and discounted losses as of the end of the last taxable year beginning before January 1, 1987. However, under section 1023(e)(3)(B) of the Act, the fresh start does not apply to any "reserve strengthening" in a taxable year beginning in 1986. Congress imposed this rule to limit the double deduction benefit allowed by the fresh start.

The proposed regulations provided a mechanical test which was applied to reserves to determine the existence of reserve strengthening for purposes of the fresh start provisions. Commentators suggested a number of different alternatives to the mechanical test. One commentator proposed that the final regulations provide specific instances and safe harbors under which certain reserve adjustments would not be treated as reserve strengthening under section 1023(e)(3)(B) of the Act. The commentator suggested that reserve strengthening should not be deemed to occur in situations where a taxpayer's reserves, based on hindsight, were deficient at the beginning of 1986 and also suggested that the following types of reserve increases not be treated as reserve strengthening under section 1023(e)(3)(B): (a) reserve increases based on normal business practice, (b) reserve increases attributable to changes in law, (c) reserve increases attributable to writing off reinsurance recoverable from reinsurers that became impaired, (d) reserve increases for reinsurance attributable to increases in reserves reported to the taxpayer by the primary insurer, (e) reserve increases resulting from the acquisition in 1986 of an insolvent insurer that was under-reserved, (f) losses paid or reserves established in 1986 where there was no reserve at the end of 1985 for pre-1986 accident years, (g) reserve increases for a particular line of business, to the extent that other companies with which the taxpayer has entered into a pool or quota share arrangement have combined reserve weakening for that line of business, and (h) reserve increases

attributable to correction of an error in reserve determinations for one or more prior years. Alternatively, the commentator suggested the use of a facts and circumstances test.

Another commentator asked that reserve strengthening be defined to exclude reserve increases necessary for business reasons. An alternative suggestion was that non-artificial reserve increases be identified based on a runoff of the taxpayer's loss reserves held at the end of 1986.

The final regulations generally adopt the mechanical test of the proposed regulation. Congress did not limit the imposition of the reserve strengthening rule to tax motivated transactions. The legislative history indicates that for purposes of the fresh start adjustment the term "reserve strengthening" includes "all additions to reserves attributable to an increase in an estimate of reserve established for a prior accident year (taking into account claims paid with respect to that accident year), and all additions to reserves resulting from a change in the assumptions (other than changes in the assumed interest rates applicable to reserves for the 1986 accident year) used in estimating losses for the 1986 accident year, as well as all unspecified or unallocated additions to loss reserves". See 2 H.R. Conf. Rep. 841, 99th Cong., 2d Sess. II–367 (1986), 1986–3 (Vol. 4), C.B. 367. Thus, Congress adopted an expansive and mechanical definition of reserve strengthening that is reflected in the final regulations.

Proposed § 1.846–3(c)(3)(iii) provided that, for purposes of the reserve strengthening rule applicable to pre-1986 accident years:

> reinsurance assumed (ceded) in the final quarter of a taxable year beginning in 1985 is treated as assumed (ceded) during the immediately succeeding taxable year if the appropriate unpaid loss reserve is not adjusted to take into account the reinsurance until that immediately succeeding year.

Several commentators noted that reporting lags of more than one calendar quarter frequently occur in the ceding company's reporting of 1985 loss information to the assuming company. In response to these comments, the final regulations include within the rule reinsurance assumed (ceded) at any time in the taxable year beginning in 1985, if the reserve is not adjusted until the first taxable year beginning in 1986.

The final regulations also clarify the treatment of reinsurance assumed during the taxable year beginning in 1986 in the determination of reserve strengthening. The final regulations provide that taxpayers take into account neither the end of the year reserve nor the payments made prior to the end of the year with respect to the assumed reinsurance in determining reserve strengthening. A corresponding clarification is made in the example illustrating this rule.

Adjustment of Annual Statement Reserves

The final regulations incorporate existing guidance for the two situations in which reserves shown on the annual statement may be increased due to disclosure of additional information. The first situation corresponds to the adjustment of reserves under section 846(b)(2), and the second situation makes the treatment of estimated salvage recoverable in determining unpaid losses symmetrical with the treatment of salvage recoverable provided in the regulations under section 832 of the Code.

Title Insurers

The final regulations do not allow title insurance companies to make an election to use their historic loss payment pattern for purposes of discounting case reserves. This modification is necessary as the annual statement does not provide the taxpayer with the information necessary to calculate its historical loss payment pattern. Further, as the annual statement does not provide the Secretary with the information necessary to construct a loss payment pattern specifically for case reserves of title insurers, the final regulations requires title insurers to discount their case reserves based on a miscellaneous casualty pattern.

Other Comments That Were Not Adopted

Commentators suggested a number of additional modifications to the proposed regulations. In the consolidated return context, several commentators suggested that a net reserve weakening for one member of an affiliated group should be netted with a net reserve strengthening of another member. Another commentator proposed that the final regulations permit companies included in intercompany pooling arrangements to demonstrate historical experience on a group basis. These comments have not been adopted.

Notice 88–100

Sections II, III, and VI of Notice 88–100, 1988–2 C.B. 439, are now obsolete.

Effective Date

Notice 88–100 set forth guidance regarding the forthcoming regulations that taxpayers were able to rely upon prior to the publication of final regulations. The final regulations follow most of the guidance in Notice 88–100 and provide relief from certain of its rules. Therefore, retaining the effective date announced in Notice 88–100 is appropriate.

Special Analyses

It has been determined that these rules are not major rules as defined in Executive Order 12291. Therefore, a Regulatory Impact Analysis is not required. It has also been determined that section 553(b) of the Administrative Procedure Act (5 U.S.C. chapter 5) and the Regulatory Flexibility Act (5 U.S.C. chapter 6) do not apply to these regulations, and, therefore, a final Regulatory Flexibility Analysis is not required. Pursuant to section 7805(f) of the Internal Revenue Code, the notice of proposed rulemaking for the regulations was submitted to the Chief Counsel for Advocacy of the Small Business Administration for comment on their impact on small business.

Drafting Information

The principal authors of these regulations are Katherine A. Hossofsky and Ann H. Logan of the Office of the Assistant Chief Counsel (Financial Institutions and Products), Internal Revenue Service. Other personnel from the Service and Treasury Department participated in their development.

List of Subjects

26 CFR 1.801–1 through 1.846

Income taxes; Insurance companies.

Adoption of Amendments to the Regulations

For the reasons set forth in the preamble, 26 CFR part 1 is amended as follows:

PART 1—INCOME TAX; TAXABLE YEARS BEGINNING AFTER DECEMBER 31, 1953

Paragraph 1. The authority for part 1 is amended by adding the following citation:

Authority: 26 U.S.C. 7805 * * * Sections 1.846–1 through 1.846–4 also issued under 26 U.S.C. 846.

Par. 2. Sections 1.846–0 through 1.846–4 are added to read as follows:

§ 1.846–0 Outline of provisions.

The following is a list of the headings in §§ 1.846–1 through 1.846–4.

§ 1.846–1 Application of discount factors.

(a) In general.
(1) Rules.
(2) Examples.

(3) Increase in discounted unpaid losses shown on the annual statement.
(4) Increase in unpaid losses which take into account estimated salvage recoverable.
(b) Applicable discount factors.
(1) In general.
(i) Discount factors published by the Service.
(ii) Composite discount factors.
(iii) Annual statement changes.
(2) Title insurance company reserves.
(3) Reinsurance business.
(i) Proportional reinsurance for accident years after 1987.
(ii) Non-proportional reinsurance.
(A) Accident years after 1991.
(B) Accident years 1988 through 1991.
(iii) Reinsurance for accident years before 1988.
(iv) 90 percent exception.
(4) International business.
(5) Composite discount factors.

§ 1.846–2 Election by taxpayer to use its own historical loss payment patterns.

(a) In general.
(b) Eligible line of business.
(1) In general.
(2) Other published guidance.
(3) Special rule for 1987 determination year.
(c) Anti-abuse rule.

§ 1.846–3 Fresh start and reserve strengthening.

(a) In general.
(b) Applicable discount factors.
(1) Calculation of beginning balance.
(2) Example.
(c) Rules for determining the amount of reserve strengthening.
(1) In general.
(2) Accident years after 1985.
(i) In general.
(ii) Hypothetical unpaid loss reserve.
(3) Accident years before 1986.
(i) In general.
(ii) Exceptions.
(iii) Certain transactions deemed to be reinsurance assumed (ceded) in 1986.
(d) Section 845.
(e) Treatment of reserve strengthening.
(f) Examples.

§ 1.846–4 Effective date.

§ 1.846–1 Application of discount factors.

(a) *In general*—(1) *Rules.* A separate series of discount factors are computed for, and applied, to undiscounted unpaid losses attributable to each accident year of each line of business shown on the annual statement (as defined by section 846(f)(3)) filed by that taxpayer for the calendar year ending with or within the taxable year of the taxpayer. See § 1.832–4(b) relating to the determination of unpaid losses. Paragraph (b) of this section provides rules relating to applicable discount factors and § 1.846–3(b) contains guidance relating to discount factors applicable to accident years prior to the 1987 accident year. Once a taxpayer applies a series of discount factors to unpaid losses attributable to an accident year of a line of business, that series of discount factors must be applied to discount the unpaid losses for that accident year for that line of business for all future taxable years. The discount factors cannot be changed to reflect a change in the taxpayer's loss payment pattern during a subsequent year or to reflect a different interest rate assumption. However, discount factors may be changed for taxpayers who elect to use their own historical loss payment pattern, if information upon which the pattern is based is adjusted upon examination by the district director.

(2) *Examples.* The following examples illustrate the principles of paragraph (a)(1) of this section:

Example 1. A taxpayer discounts unpaid losses attributable to all accident years prior to 1992 using discount factors published by the Service. In 1992, the taxpayer elects, under § 1.846–2, to compute discount factors using its own historical loss payment pattern. The taxpayer must continue to discount unpaid losses attributable to pre-1992 accident years using the discount factors published for those accident years by the Service.

Example 2. On its annual statements through 1987, a taxpayer did not allocate unpaid losses attributable to proportional reinsurance to the line of business associated with the risks being reinsured. Beginning with the 1988 annual statement, the taxpayer allocated those losses for all accident years to the line of business being reinsured. The taxpayer must continue to discount the unpaid losses attributable to proportional reinsurance from pre-1988 accident years using the discount factors that were used in determining tax reserves for the 1987 tax year. (See paragraph (b)(3) of this section for rules relating to the application of discount factors to reinsurance unpaid losses.)

(3) *Increase in discounted unpaid losses shown on the annual statement.* If the amount of unpaid losses shown on the annual statement is determined on a discounted basis, and the extent to which the unpaid losses were discounted can be determined on the basis of information disclosed on or with the annual statement, the amount of the unpaid losses to which the discount factors are applied shall be determined without regard to any reduction attributable to the discounting reflected on the annual statement.

(4) *Increase in unpaid losses which take into account estimated salvage recoverable.* If the amount of unpaid losses shown on the annual statement reflects a reduction for estimated salvage recoverable and the extent to which the unpaid losses were reduced by estimated salvage recoverable is appropriately disclosed as required by § 1.832–4(d)(2), the amount of unpaid losses shall be determined without regard to the reduction for salvage recoverable.

(b) *Applicable discount factors*—(1) *In general.* Except as otherwise provided in section 846(f)(6) (relating to certain accident and health lines of business), in § 1.846–2 (relating to a taxpayer's election to use its own historical loss payment pattern), in this paragraph (b), or in other guidance published in the Internal Revenue Bulletin, the following factors must be used—

(i) *Discount factors published by the Service.* If the Service has published discount factors for a line of business, a taxpayer must discount unpaid losses attributable to that line by applying those discount factors; and

(ii) *Composite discount factors.* If the Service has not published discount factors for a line of business, a taxpayer must discount unpaid losses attributable to that line by applying composite discount factors.

(iii) *Annual statement changes.* If the groupings of individual lines of business on the annual statement changes, taxpayers must discount the unpaid losses on the resulting lines of business with the discounting patterns that would have applied to those unpaid losses based on their annual statement classification prior to the change.

(2) *Title insurance company reserves.* A title insurance company may only take into account case reserves (relating to claims which have been reported to the insurance company). Unless the Service publishes other guidance, the reserves must be discounted using the "Miscellaneous Casualty" discount factors published by the Service. Section 832(b)(8) provides rules for determining the discounted unearned premiums of a title insurance company.

(3) *Reinsurance business*—(i) *Proportional reinsurance for accident years after 1987.* For the 1988 accident year and subsequent accident years, unpaid losses for proportional reinsurance must be discounted using discount factors applicable to the line of business to which those unpaid losses are allocated as required on the annual statement.

(ii) *Non-proportional reinsurance*—(A) *Accident years after 1991.* For the 1992 accident year and subsequent accident years, unpaid losses for non-proportional reinsurance must be discounted using the applicable discount factors published by the Service for the appropriate reinsurance line of business.

(B) *Accident years 1988 through 1991.* For the 1988, 1989, 1990, and 1991 accident years unpaid losses for non-proportional reinsurance must be

discounted using composite discount factors.

(iii) *Reinsurance for accident years before 1988.* If on its annual statement a taxpayer does not allocate unpaid losses to the applicable line of business for proportional or nonproportional reinsurance attributable to the 1987 accident year or a prior accident year, those losses must be discounted using composite discount factors. If on its annual statement a taxpayer allocates to the underlying line of business reinsurance unpaid losses that are attributable to the 1987 accident year or a prior accident year, those losses must be discounted using discount factors applicable to the underlying line of business.

(iv) *90 percent exception.* For purposes of § 1.846–1(b)(3) (ii) and (iii), if more than 90 percent of all the unallocated losses of a taxpayer for an accident year relate to one underlying line of business, the taxpayer must discount all unallocable reinsurance unpaid losses attributable to that accident year using the discount factors published by the Service for the underlying line of business.

(4) *International business.* For any accident year, unpaid losses which are attributable to international business must be discounted using composite discount factors unless more than 90 percent of all losses for that accident year relate to one underlying line of business. If more than 90 percent of all losses for an accident year relate to one underlying line of business, the taxpayer must discount the losses attributable to that accident year using discount factors published by the Service for the underlying line of business.

(5) *Composite discount factors.* For purposes of the regulations under section 846, "composite discount factors" means the series of discount factors published annually by the Service determined on the basis of the appropriate composite loss payment pattern.

§ 1.846–2 Election by taxpayer to use its own historical loss payment pattern.

(a) *In general.* If a taxpayer has one or more eligible lines of business in a determination year, the taxpayer may elect on the taxpayer's timely filed Federal income tax return for the determination year to discount unpaid losses using its own historical loss payment pattern instead of the industry-wide pattern determined by the Secretary. A taxpayer making the election must use its own historical loss payment pattern in discounting unpaid losses for each line of business that is an eligible line of business in that determination year. The election applies to accident years ending with the determination year and to each of the four succeeding accident years. If a taxpayer makes the election for the 1987 determination year, the taxpayer must use its 1987 loss payment pattern (determined by reference to its 1985 annual statement) to discount unpaid losses attributable to all accident years prior to 1988.

(b) *Eligible line of business*—(1) *In general.* A line of business is an eligible line of business in a determination year if, on the most recent annual statement filed by the taxpayer before the beginning of that determination year, the taxpayer reports losses and loss expenses incurred (in Schedule P, part 1, column 24 of the 1990 annual statement or comparable location in an earlier or subsequently revised blank) for at least the number of accident years for which losses and loss expenses incurred for that line of business are required to be separately reported on that annual statement. For example, for the 1987 determination year, the 1985 annual statement is used. The annual statement to be used to determine eligibility in subsequent determination years is the annual statement for each fifth year after 1985 (e.g., 1990, 1995, etc.).

(2) *Other published guidance.* A line of business is also an eligible line of business for purposes of the election if the line is an eligible line under requirements published for this purpose in the Internal Revenue Bulletin.

(3) *Special rule for 1987 determination year.* A line of business is an eligible line of business in the 1987 determination year if it is eligible under paragraph (b) (1) or (2) of this section, or if on the most recent annual statement filed by the taxpayer before the beginning of the 1987 determination year, the taxpayer reports written premiums for the line of business for at least the number of accident years that unpaid losses for that line of business are required to be separately reported on that annual statement.

(c) *Anti-abuse rule.* To prevent avoidance of the requirement that the election to use historical loss payment patterns apply to all eligible lines of business of a taxpayer, the district director may—

(1) Nullify a taxpayer's election to compute discounted unpaid losses based on its historical loss payment pattern;

(2) Adjust a taxpayer's historical loss payment pattern; or

(3) Make other proper adjustments.

§ 1.846–3 Fresh start and reserve strengthening.

(a) *In general.* Section 1023(e) of the Tax Reform Act of 1986 ("the 1986 Act") provides rules relating to fresh start and reserve strengthening. For purposes of section 1023(e) of the 1986 Act, a taxpayer must discount its unpaid losses as of the end of the last taxable year beginning before January 1, 1987. The excess of undiscounted unpaid losses over discounted unpaid losses as of that time is not required to be included in income, except (as provided in paragraph (e) of this section) to the extent of any "reserve strengthening" in a taxable year beginning in 1986. The exclusion from income of this excess is known as "fresh start." The amount of fresh start is, however, included in earnings and profits for the first taxable year beginning after December 31, 1986.

(b) *Applicable discount factors*—(1) *Calculation of beginning balance.* For purposes of section 1023(e) of the 1986 Act, a taxpayer discounts unpaid losses as of the end of the last taxable year beginning before January 1, 1987—

(i) By using the same discount factors that are used in the succeeding taxable year to discount unpaid losses attributable to the 1987 accident year and prior accident years (see section 1023(e)(2) of the 1986 Act); and

(ii) By applying those discount factors as if the 1986 accident year were the 1987 accident year.

(2) *Example.* The following example illustrates the principles of this paragraph (b):

Example. X, a calendar year taxpayer, does not make an election in 1987 to use its own historical loss payment pattern. When X computes discounted unpaid losses for its last taxable year beginning before January 1, 1987, the discount factor for AY+0 published in Rev. Rul. 87–34, 1987–1 C.B. 168, must be applied to unpaid losses attributable to the 1986 accident year; the discount factor for AY+1 is applied to unpaid losses attributable to the 1985 accident year; etc.

(c) *Rules for determining the amount of reserve strengthening (weakening)*—(1) *In general.* The amount of reserve strengthening (weakening) is the amount that is determined under paragraph (c)(2) or (3) to have been added to (subtracted from) an unpaid loss reserve in a taxable year beginning in 1986. For purposes of section 1023(e)(3)(B) of the 1986 Act, the amount of reserve strengthening (weakening) must be determined separately for each unpaid loss reserve by applying the rules of this paragraph (c). This determination is made without regard to the reasonableness of the amount of the unpaid loss reserve and without regard

to the taxpayer's discretion, or lack thereof, in establishing the amount of the unpaid loss reserve. The amount of reserve strengthening for an unpaid loss reserve may not exceed the amount of the reserve, including any undiscounted strengthening amount, as of the end of the last taxable year beginning before January 1, 1987. For purposes of this section, an "unpaid loss reserve" is the aggregate of the unpaid loss estimate for losses (whether or not reported) incurred in an accident year of a line of business.

(2) *Accident years after 1985*—(i) *In general.* The amount of reserve strengthening (weakening) for an unpaid loss reserve for an accident year after 1985 is the amount by which that reserve at the end of the last taxable year beginning in 1986 exceeds (is less than) a hypothetical unpaid loss reserve.

(ii) *Hypothetical unpaid loss reserve.* For purposes of this paragraph (c)(2), the term "hypothetical unpaid loss reserve" means a reserve computed for losses the estimates of which were included, at the end of the last taxable year beginning in 1986, in the unpaid loss reserve for which reserve strengthening (weakening) is being determined. The hypothetical unpaid loss reserve must be computed using the same assumptions, other than the assumed interest rates in the case of reserves determined on a discounted basis for annual statement reporting purposes, that were used to determine the 1985 accident year reserve, if any, for the line of business for which the hypothetical reserve is being computed. If there was no 1985 accident year reserve for that line of business, the hypothetical unpaid loss reserve is the reserve, at the end of the last taxable year beginning in 1986, for which reserve strengthening (weakening) is being determined (and thus there is no reserve strengthening or weakening).

(3) *Accident years before 1986*—(i) *In general.* For each taxable year beginning in 1986, the amount of reserve strengthening (weakening) for an unpaid loss reserve for an accident year before 1986 is the amount by which the reserve at the end of that taxable year exceeds (is less than)—

(A) The reserve at the end of the immediately preceding taxable year; reduced by

(B) Claims paid and loss adjustment expenses paid ("loss payments") in the taxable year beginning in 1986 with respect to losses that are attributable to the reserve. The amount by which a reserve is reduced as a result of reinsurance ceded during a taxable year beginning in 1986 is treated as a loss payment made in that taxable year.

(ii) *Exceptions.* Notwithstanding paragraph (c)(3)(i) of this section, the amount of reserve strengthening (weakening) for an unpaid loss reserve for an accident year before 1986 does not include—

(A) An amount added to the reserve in a taxable year beginning in 1986 as a result of a loss reported to the taxpayer from a mandatory state or federal assigned risk pool if the amount of the loss reported is not discretionary with the taxpayer; or

(B) Payments made with respect to reinsurance assumed during a taxable year beginning in 1986 or amounts added to the reserve to take into account reinsurance assumed for a line of business during a taxable year beginning in 1986, but only to the extent that the amount does not exceed the amount of a hypothetical reserve for the reinsurance assumed. The amount of the hypothetical reserve is determined using the same assumptions (other than the assumed interest rates) that were used to determine a reserve for reinsurance assumed for the line of business in a taxable year beginning in 1985.

(iii) *Certain transactions deemed to be reinsurance assumed (ceded) in 1986.* For purposes of this paragraph (c)(3), reinsurance assumed (ceded) in a taxable year beginning in 1985 is treated as assumed (ceded) during the succeeding taxable year if the appropriate unpaid loss reserve is not adjusted to take into account the reinsurance transaction until that succeeding taxable year.

(d) *Section 845.* Any reinsurance transaction that has as one of its purposes the avoidance of the reserve strengthening limitation is subject to section 845.

(e) *Treatment of reserve strengthening.* The fresh start provision of section 1023(e)(3)(A) of the 1986 Act does not apply to the portion of the taxpayer's unpaid losses attributable to reserve strengthening. Thus, the difference between the undiscounted unpaid losses attributable to reserve strengthening and the discounted unpaid losses attributable to reserve strengthening must be included in income and, therefore, included in earnings and profits for the first taxable year beginning after December 31, 1986. The amount that a taxpayer must include in income for its first taxable year beginning after December 31, 1986, as a result of reserve strengthening is equal to the excess (if any) of—

(1) The sum of each amount of reserve strengthening multiplied by the difference between 100 percent and the discount factor that, under paragraph (b) of this section, is applicable to the unpaid loss reserve which was strengthened; over

(2) The sum of each reserve weakening multiplied by the difference between 100 percent and the discount factor that, under paragraph (b) of this section, is applicable to the unpaid loss reserve which was weakened.

(f) *Examples.* The following examples illustrate the principles of this section. For purposes of these examples, it is assumed that the taxpayers are property and casualty insurance companies that in 1987 did not elect to use their own historical loss payment patterns.

Example 1. (i) As of the end of 1985, X, a calendar year taxpayer, had undiscounted unpaid losses of $1,000,000 in the workers' compensation line of business for the 1984 accident year. The same reserve had undiscounted unpaid losses of $900,000 at the end of 1986. During 1986, X's loss payments for this reserve were $300,000. Accordingly, under paragraph (c)(3)(i) of this section, X has a reserve strengthening of $200,000 ($900,000–($1,000,000–$300,000)).

(ii) This was X's only reserve strengthening or weakening. Thus, under paragraph (e) of this section, for 1987 must include in income $54,361.40 ($200,000 × (100%–72.8193%)). The factor of 72.8193% is the AY+2 factor from the workers' compensation series of discount factors published in Rev. Rul. 87–34, 1987–1 C.B. 168.

Example 2. The facts are the same as in *Example 1*, except that X's 1986 loss payments for the reserve were $1,100,000. If only paragraph (c)(3)(i) of this section were applied, X would have a $1,000,000 reserve strengthening ($900,000–($1,000,000–$1,100,000)). Under paragraph (c)(1) of this section, however, the amount of reserve strengthening for the reserve is limited to the amount of the reserve at the end of 1986. Accordingly, X has a reserve strengthening of $900,000 and for 1987 must include in income $244,626.30 ($900,000 × (100%–72.1893%)).

Example 3. (i) As of the end of 1985, Y, a calendar year taxpayer, had undiscounted unpaid losses of $1,000,000 in the auto physical damage line of business for the 1985 accident year. The same reserve included undiscounted unpaid losses of $600,000 at the end of 1986. During 1986, Y had loss payments of $300,000 for this line of business. Under paragraph (c)(3)(i) of this section Y has a $100,000 reserve weakening ($600,000–($1,000,000–$300,000)).

(ii) Under paragraph (e) of this section, the only effect of the reserve weakening is to reduce the amount that Y is required to include in income as a result of any strengthening of another reserve.

Example 4. The facts are the same as in *Example 1* except that X also has a $100,000 reserve weakening for the 1985 accident year in its auto physical damage line of business. Under paragraph (b) of this section, the reserve discount factor for the reserve is 93.3400, the AY+1 factor from the auto physical damage series of discount factors published in Rev. Rul. 87–34. Thus, under paragraph (e) of this section, the amount that

X is required to include in income in 1987 is reduced by $6,660 ($100,000 × (100%–93.3400%)), resulting in an amount of $47,761.40 ($54,361.40–$6,660).

Example 5. (i) At the end of 1985, Z, a calendar year taxpayer, had undiscounted unpaid losses of $1,000,000 in the workers' compensation line of business for the 1984 accident year. On May 1, 1986, Z ceded $130,000 of the reserve to an unrelated reinsurer. Z added $250,000 to the 1985 year end reserve to take into account workers' compensation risks for the 1984 accident year that Z assumed in a reinsurance transaction on September 1, 1986. Z had $230,000 of 1986 loss payments related to the 1984 accident year of its workers' compensation line, $60,000 of which was attributable to the reinsurance assumed by Z. At the end of 1986, Z's reserve for the workers' compensation line for the 1984 accident year was $1,100,000.

(ii) If only paragraph (c)(3)(i) of this section were applied, Z would have a $460,000 reserve strengthening ($1,100,000–($1,000,000–230,000–$130,000)). Under paragraph (c)(3)(ii)(B) of this section, however, reserve strengthening does not include the $250,000 that Z added to the reserve to take into account the reinsurance assumed. Also, none of the $60,000 of loss payments attributable to the reinsurance assumed in 1986 are taken into account. Accordingly, Z has $150,000 of reserve strengthening ($460,000–$250,000–$60,000). If this is Z's only reserve strengthening or weakening, then the amount that Z must include in income for 1987 under paragraph (e) of this section is $40,771.05 ($150,000 × (100%–72.8193%)). The factor of 72.8193% is the AY+2 factor from the workers' compensation series of discount factors published in Rev. Rul. 87–34.

Example 6. (i) X was a calendar year taxpayer before July 1, 1986, the date on which X became a member of an affiliated group of corporations that files a consolidated return with a June 30 year end. Thus, X had two taxable years beginning in 1986: a short taxable year ending June 30, 1986, and a fiscal taxable year ending June 30, 1987.

(ii) As of the end of 1985, X had undiscounted unpaid losses of $800,000 in the automobile liability line of business for the 1983 accident year. At the end of the short taxable year, X had reserves of $700,000 of undiscounted unpaid losses, and on June 30, 1987, had reserves of $600,000 of undiscounted unpaid losses. During the short taxable year, ending June 30, 1986, X's loss payments for this reserve were $120,000. During the taxable year ending June 30, 1987, X's loss payments for this reserve were $180,000. Under paragraph (c)(3)(i) of this section, X has a $100,000 reserve strengthening: of which $20,000 ($700,000–($800,000–$120,000)) is attributable to the short taxable year ending June 30, 1986 and $80,000 ($600,000–($700,000–$180,000)) is attributable to the taxable year ending June 30, 1987.

(iii) The amount of reserve strengthening for this line of business is determined pursuant to the principles of paragraph (c)(2) of this section.

§ 1.846–4 Effective date.

Sections 1.846–1 through Sections 1.846–3 apply to taxable years beginning after December 31, 1986.

Approved: August 14, 1992.

Shirley D. Peterson,

Commissioner of Internal Revenue.

Alan J. Wilensky,

Assistant Secretary of the Treasury.

[FR Doc. 92–21299 Filed 9–4–92; 8:45 am]

BILLING CODE 4830–01–M

Bureau of Alcohol, Tobacco and Firearms

27 CFR Part 20

[T.D. ATF–332, Re: Notice No. 743]

Specially Denatured Spirits; Miscellaneous Amendments

AGENCY: Bureau of Alcohol, Tobacco and Firearms (ATF), Department of the Treasury.

ACTION: Treasury decision, final rule.

SUMMARY: This final rule amends regulations to eliminate the requirement that a person obtain a permit as a dealer in specially denatured spirits with respect to shipments of specially denatured spirits which that person never physically received nor intended to receive; clarify a reference to specially denatured spirits, and to correct a regulatory reference; allow for the notification of adoption of formulas and statements of process to be filed at the regional level; allow distributors of an article to place minimal identifying information (name, address and phrase such as "distributed by") on the label of that article without qualifying in any manner under agency regulations on the distribution and use of denatured alcohol and rum; allow that, in certain cases, code marks may be used on the container of an article, in lieu of a permit number, to identify the site where the article was manufactured; and revise the procedures for the disposition of specially denatured spirits from one user to another.

These changes are intended to liberalize the procedures applicable to the distribution of specially denatured spirits, and reduce regulatory burdens.

EFFECTIVE DATE: September 8, 1992.

FOR FURTHER INFORMATION CONTACT: Tamara Light, Distilled Spirits and Tobacco Branch, Bureau of Alcohol, Tobacco and Firearms, 650 Massachusetts Avenue NW., Washington, DC 20226 ((202) 927–8210).

SUPPLEMENTARY INFORMATION:

Background

Dealer Redefined

26 U.S.C. 5271 provides, in part, that persons who deal in specially denatured spirits shall obtain a permit which authorizes that activity. ATF has interpreted the term "deal in" to mean the purchase and sale of specially denatured spirits. This interpretation has sometimes required a person who merely takes orders for specially denatured spirits, and arranges for the shipment to an eligible user, to qualify with ATF as a dealer, to file a bond and to otherwise comply with the regulatory provisions of 27 CFR part 20, because that person is buying and selling specially denatured spirits. Since a person acting in this manner never physically receives a shipment of specially denatured spirits, and never intends to receive such shipment, ATF feels that by revising the definition of the term dealer, only those persons who engage in activities involving physical possession of denatured spirits will be required to obtain a permit.

It is ATF's view that product accountability should rest with persons who physically receive specially denatured spirits. This view is based on the fact that specially denatured spirits may only be transferred between persons who hold a permit authorizing them to receive, store, use or denature such products. This means that ATF can establish the accountability of specially denatured spirits by verifying that the consignor and consignee are operating in compliance with the provisions of 27 CFR parts 19 and/or 20. There is no need for ATF to consider the ownership (without physical receipt) of specially denatured spirits by intervening third parties. Accountability and tax liability relating to specially denatured spirits will reside with those persons who are accountable for the specially denatured spirits because they physically possess the product.

Regulation 27 CFR 20.25 Clarified

The phrase "specially denatured alcohol" in § 20.25 is revised to read "specially denatured spirits." Section 20.25 is revised to correct the reference to § 20.222 to read § 20.241.

Regulation in 20.63 Revised

The regulations in 27 CFR 20.63 provide for the adoption of a predecessor's formulas and statements of process by a successor. Current regulations require the successor to submit to the Director a certificate containing information regarding the proposed adoption. ATF is revising

§ 20.63 to allow the certificate to be submitted to the regional director (compliance) instead of the Director. This change will make this procedure consistent with other regulatory requirements that changes after original qualifications be filed with the regional director (compliance). The change will result in a streamlined process for notifying ATF of changes which affect permits.

Changes in Labeling Provisions for Articles

The Cosmetic, Toiletry and Fragrance Association (CTFA) on behalf of its members, petitioned ATF to amend 27 CFR 20.134(b) to allow the principal place of business to be shown on the labels of articles for external human use that contain denatured spirits, when the labels are coded to identify the place the article was manufactured. CTFA has requested this change to ease the burden of the labeling requirements for companies who have more than one manufacturing facility. The current regulations require the name and principal office of the manufacturer and the permit number of the place of manufacture. The purpose of this requirement is to provide the consumer with information about the manufacturing location of the article. We believe the consumer will be sufficiently informed as to who is responsible for the article by allowing manufacturers to use their principal business address on the label. This change will facilitate the use of identical labels in the situation where a single manufacturer operates more than one manufacturing site. Manufacturers with more than one manufacturing site will have a reduced cost because they will no longer maintain separate label inventories merely because of different addresses printed on labels. The identifying code marks will be permissible following submission of a notice explaining the coding system to the regional director (compliance) of the region where the manufacturing site is located.

ATF is also revising 27 CFR 20.134 to permit distributors to add a label to an article without the necessity to qualify in any way under 27 CFR part 20, provided the label merely states the distributor's name and address (city and State) and a short explanatory phrase, such as "Distributed by." Such additional labeling has been permitted for many years for alcoholic beverage products without danger to revenue or to consumers. It is expected that the use of such additional labeling will be a matter to be agreed upon between the manufacturer or packager and the distributor.

Regulation 20.235 Revised

Regulation 27 CFR 20.235(a) permits the transfer of specially denatured spirits from one user to another. Section 20.235 is revised to clarify the manner in which such spirits packaged for transfer shall be marked or labeled. This change will improve the accountability of the specially denatured spirits.

Public Participation—Written Comments

ATF received two comments during the 30 day comment period which ended on July 23, 1992. Both commenters were opposed to eliminating the current requirement that a person who merely takes orders and arranges for the shipment of specially denatured spirits without ever taking physical possession of the spirits, obtain a permit as a dealer. The commenters feel that by eliminating this requirement, the third party brokers will be less knowledgeable of the regulatory specially denatured spirits requirements and, therefore, an increased risk of an unaccounted for use of specially denatured spirits is present. ATF does not feel that the accountability over the use of specially denatured spirits will be lessened. ATF believes that it is not necessary for a person who merely directs the shipment of specially denatured spirits from one party to another without ever physically receiving the specially denatured spirits to qualify as a dealer because specially denatured spirits may only be transferred between persons who hold a permit authorizing them to receive, store, use or denature such products. This means that if a third party broker directs a dealer to ship x amount of specially denatured spirits to a user, both the dealer and the user will have to hold qualified ATF permits authorizing them to deal in and/or use specially denatured spirits. Since the dealer and the user will be the only ones who actually physically process the specially denatured spirits, there is no need to require that the third party obtain a permit. ATF will continue to be able to regulate both permit holders (the dealer and the user) and ensure compliance with the regulations in 27 CFR parts 19 and/or 20.

Final Rule

Accordingly, ATF is adopting the regulations as proposed in Notice No. 743 and published in the Federal Register (57 FR 27956, June 23, 1992).

Regulatory Flexibility Act

It is hereby certified that this final rule will not have a significant economic impact on a substantial number of small entities. Accordingly, a regulatory flexibility analysis is not required because the final rule is not expected (1) to have significant secondary or incidental effects on a substantial number of small entities; or (2) to impose or otherwise cause, a significant increase in the reporting, recordkeeping or other compliance burdens on a substantial number of small entities.

Executive Order 12291

It has been determined that this document is not a "major rule" within the meaning of Executive Order 12291, and a regulatory impact analysis is not required because it will not have an annual effect on the economy of $100 million or more; it will not result in a major increase in costs or prices for consumers, individual industries, Federal, state, or local government agencies, or geographic regions; and it will not have significant adverse effects on competition, employment, investment, productivity, innovation, or on the ability of United States-based enterprises to compete with foreign-based enterprises in domestic or export markets.

Paperwork Reduction Act

The collections of information contained in this final regulation have been reviewed and approved by the Office of Management and Budget in accordance with the Paperwork Reduction Act of 1980 (44 U.S.C. 3504(h)) under control numbers 1512–0336 and 1512–0337. The total annual reporting burden for 1512–0336, which combines numerous sections of regulations contained in 27 CFR Part 20, is 1,556 hours. The total annual recordkeeping burden for 1512–0337 is 1 hour.

Comments concerning the accuracy of this burden estimate and suggestions for reducing this burden should be directed to the Chief, Information Programs Branch, room 3200, Bureau of Alcohol, Tobacco and Firearms, Washington, DC 20226, and the Office of Management and Budget, Paperwork Reduction Project 1512–0336 and 1512–0337, Washington, DC 20503.

Drafting Information

The principal author of this document is Tamara Light, Distilled Spirits and Tobacco Branch, Bureau of Alcohol, Tobacco and Firearms.

List of Subjects in 27 CFR Part 20

Administrative practice and procedure, Advertising, Alcohol and alcohol beverages, Authority delegations, Claims, Excise taxes, Reporting and recordkeeping requirements, Surety bonds.

Issuance

Accordingly, 27 CFR part 20, entitled "Distribution and Use of Denatured Alcohol and Rum," is amended as follows:

1. The authority citation for 27 CFR part 20 is revised to read as follows:

Authority: 26 U.S.C. 5001, 5206, 5214, 5271–5275, 5311, 5552, 5555, 5607, 6065, 7805.

2. Section 20.11 is amended by revising the definition for dealer and adding an OMB control number to the end of the section to read as follows:

§ 20.11 Meaning of terms.

* * * * *

Dealer. A person required to hold a permit to deal in specially denatured spirits for resale to persons authorized to purchase or receive specially denatured spirits in accordance with this part. The term does not include a person who only buys and sells specially denatured spirits which that person never physically receives or intends to receive.

* * * * *

(Approved by the Office of Management and Budget under control number 1512–0336)

3. Section 20.25 is revised to read as follows:

§ 20.25 Permits.

The Director shall issue permits covering the use of specially denatured spirits by the United States or a Governmental agency as provided in § 20.241. The regional director (compliance) shall issue the industrial alcohol user permit, Form 5150.9, required under this part.

4. The information cited immediately following section 20.36 is revised to read as follows:

§ 20.36 Execution under penalties of perjury.

* * * * *

(26 U.S.C. 6065)

5. Section 20.63(a) is revised to read as follows:

§ 20.63 Adoption of formulas and statements of process.

(a) The adoption by a successor (proprietorship or fiduciary) of a predecessor's formulas and statements of process as provided in § 20.57(c), and § 20.58, will be in the form of a certificate submitted to the regional director (compliance).

* * * * *

6. Section 20.134(b)(1)(ii) is revised and paragraph (f) is added to read as follows:

§ 20.134 Labeling.

(b) * * *

(1) * * *

(ii) The name and principal office address (city and State) of the manufacturer, and the permit number or numbers of the place or places of manufacture. However, in lieu of such permit number or numbers, the place or places where the manufacturing operation occurred may be indicated by a coding system. Prior to using a coding system, the manufacturer shall send a notice explaining the coding system to the regional director (compliance) of the region where the manufacturing site is located, or

* * * * *

(f) *Distributor labeling.* Distributors of an article may place minimal identifying information (name, address and a phrase such as "distributed by") on the label of that article (or on an additional label) without qualifying in any manner under this part; provided:

(1) The article is produced, packaged and labeled as provided in this part; and

(2) The distributor does not produce, repackage or reprocess the article.

(Approved by the Office of Management and Budget under control number 1512–0336)

7. Section 20.235 is amended by revising paragraph (b) to read as follows:

§ 20.235 Disposition to another user.

* * * * *

(b) The user shall prepare a record of shipment in accordance with § 20.171. The packages to be shipped shall bear the name and permit number of the user and the marks and labels required under § 20.178. The user's copy of the record of shipment shall include an explanation of the reason for the disposition.

* * * * *

(Approved by the Office of Management and Budget under control number 1512–0337)

Signed: August 19, 1992.

Stephen E. Higgins,

Director.

Approved: August 26, 1992.

Peter K. Nunez,

Assistant Secretary (Enforcement).

[FR Doc. 92–21361 Filed 9–4–92; 8:45 am]

BILLING CODE 4810–31–M

DEPARTMENT OF DEFENSE

Office of the Secretary

32 CFR Part 60

Drug Abuse Testing Program

AGENCY: Office of the Secretary of Defense, DoD.

ACTION: Final rule.

SUMMARY: The Department of Defense hereby removes 32 CFR part 60. This part has served the purpose for which it was issued and is no longer valid.

EFFECTIVE DATE: August 31, 1992.

FOR FURTHER INFORMATION CONTACT: L.M. Bynum, Correspondence and Directives Directorate, 1155 Defense Pentagon, Washington, DC 20301–1155.

SUPPLEMENTARY INFORMATION:

List of Subjects in 32 CFR Part 60

Drug testing; Military personnel.

PART 60—[REMOVED]

Accordingly, by the authority of 10 U.S.C. 131, 32 CFR part 60 is removed.

Dated: September 2, 1992.

L.M. Bynum,

Alternate OSD Federal Register Liaison Officer, Department of Defense.

[FR Doc. 92–21502 Filed 9–4–92; 8:45 am]

BILLING CODE 3810–10–M

FEDERAL COMMUNICATIONS COMMISSION

47 CFR Part 73

[MM Docket Nos. 85–251 and 85–390; FCC 92–401]

Television Broadcasting Services; Santa Barbara, Ventura, and Bakersfield, CA

AGENCY: Federal Communications Commission.

ACTION: Final rule.

SUMMARY: This document consolidates MM Dockets No. 85–251 and 85–390 and deletes UHF–TV Channel 51 from Ventura, California, in response to two petitions for reconsideration and two applications for review. See 52 FR 38232 (October 15, 1987) and 52 FR 41433 (October 28, 1987). The Commission deleted Channel 51 because of changed circumstances that have occurred since the channel was allotted in 1987. Specifically, the channel had become vacant and no applications can be filed for the channel because of the freeze imposed for vacant allotments in order

to accommodate the inquiry into Advanced Television Systems. With this action, this proceeding is terminated.

EFFECTIVE DATE: October 8, 1992.

FOR FURTHER INFORMATION CONTACT: Andrew J. Rhodes, Mass Media Bureau, (202) 632-5414.

SUPPLEMENTARY INFORMATION: This is a synopsis of the Commission's Memorandum Opinion and Order in MM Docket Nos. 85-251 and 85-390, adopted August 24, 1992, and released September 1, 1992. The full text of this Commission decision is available for inspection and copying during normal business hours in the FCC Dockets Branch (room 230), 1919 M Street, NW., Washington, DC. The complete text of this decision may also be purchased from the Commission's copy contractors. Downtown Copy Center, (202) 452-1422, 1990 M Street, NW., suite 640, Washington, DC 20036.

List of Subjects in 47 CFR Part 73

Television broadcasting.

PART 73—[AMENDED]

1. The authority citation for part 73 continues to read as follows:

Authority: 47 U.S.C. 154, 303.

§ 73.606 [Amended]

2. Section 73.606(b), the Table of Allotments under California, is amended by deleting Channel 51 at Ventura.

Federal Communications Commission.

Donna Searcy,

Secretary.

[FR Doc. 92-21468 Filed 9-4-92; 8:45 am]

BILLING CODE 6712-01-M

---

47 CFR Part 90

[PR Docket No. 92-79; FCC 92-359]

Elimination of Separate Licensing of End Users of Specialized Mobile Radio Systems

AGENCY: Federal Communications Commission.

ACTION: Final rule.

SUMMARY: The Commission has adopted a Report and Order eliminating separate licensing of end users of Specialized Mobile Radio systems in most circumstances. End users will operate under the terms and conditions of the authorizations issued Specialized Mobile Radio base station licensees, who will assume responsibility for exercising operational control over mobile and control stations communicating over their base stations. Certain loading reports required of Specialized Mobile Radio licensees are eliminated and loading calculations for trunked systems are to be made on the basis of base station licensee business records. Requirements for modifying trunked Specialized Mobile Radio system licenses are relaxed.

EFFECTIVE DATE: October 8, 1992.

ADDRESSES: Federal Communications Commission, 1919 M Street, NW., Washington, DC 20554.

FOR FURTHER INFORMATION CONTACT: Myra G. Kovey, (202) 632-6497, Private Radio Bureau.

SUPPLEMENTARY INFORMATION: This is a summary of the Commission's Report and Order, PR Docket No. 92-79, FCC 92-359, adopted August 5, 1992, and released August 31, 1992. The full text of this Report and Order is available for inspection and copying during normal business hours in the FCC Dockets Branch, room 230, 1919 M Street, NW., Washington, DC. The complete text may be purchased from the Commission's copy contractor, Downtown Copy Center, 1990 M Street, NW., Washington, DC 20036, telephone (202) 452-1422.

Summary of Report and Order

1. In a Notice of Proposed Rule Making, released May 5, 1992, the Commission proposed with respect to the Specialized Mobile Radio (SMR) service elimination of separate SMR end user licensing, modification of the reporting requirements associated with the loading of trunked SMR systems, and relaxation of license modification requirements for trunked SMR systems. The Report and Order considers these proposals.

2. First, the Report and Order eliminates separate SMR end user licensing with the exception of proposed end user facilities falling within the scope of the Federal Aviation Act and implementing Rules, the National Environmental Policy Act and implementing Rules and Commission "quiet zone" restrictions. Facilities in these categories must be separately licensed by the Commission. SMR base station licensees are responsible for assuring that end users comply with all applicable Rules and Regulations governing end user operations.

3. Next, the Report and Order eliminates requirements for periodic mobile loading reports and substitutes a requirement that SMR base station licensees submit loading data only when applying for authorizations for which loading is a prerequisite. Mobile loading data will comprise the average number of mobiles and control stations operating on a licensee's system on the first business day of the month for the six month period immediately preceding the filing of an application. The average will be calculated according to the licensee's business records.

3. Finally, the Report and Order eliminates the requirement that licensees of trunked SMR systems modify their licenses when there is a change in the location or number of fixed, control or mobile transmitters.

Final Regulatory Flexibility Analysis

Need and Purpose of This Action

The Commission is adopting this Report and Order to eliminate a substantial burden on the public, reduce administrative costs and to improve government efficiency by removing the requirement that most end users of trunked and conventional SMR systems obtain individual licenses.

Summary of the Issues Raised

No comments addressed our Initial Regulatory Flexibility Analysis.

Significant Alternatives Considered

The Commission considered and rejected an alternative regarding the method of calculating loading data.

List of Subjects in 47 CFR Part 90

Private land mobile radio services.

Amendatory Text

Title 47 of the Code of Federal Regulations, part 90, is amended as follows:

1. The authority citation for part 90 continues to read as follows:

Authority: Sections 4, 303, and 332, 48 Stat. 1066, 1082, as amended; 47 U.S.C. 154, 303, and 332, unless otherwise noted.

§ 90.651 [Amended]

2. 47 CFR § 90.651(a) is removed and reserved.

3. 47 CFR § 90.655 is revised to read as follows:

§ 90.655 Special licensing requirements for Specialized Mobile radio systems.

End users of conventional or trunked Specialized Mobile Radio systems that have control stations that require FAA clearance, as specified in Subpart B of part 17 of Title 47 of the Code of Federal Regulations, 47 CFR 17.7-17.17, or that may have a significant environmental effect, as defined by § 1.1307, or that are located in a "quiet zone", as defined by 47 CFR 90.177 must be individually licensed for such control stations prior to construction or operation. All other end users' operations will be within the scope of the base station licensee. All end users, however, continue to be

responsible to comply with 47 CFR part 90 and other federal laws.

4. A new § 90.656 is added as follows:

§ 90.656 Responsibilities of base station licensees of Specialized Mobile Radio systems.

(a) The licensees of base stations that provide Specialized Mobile Radio service on a commercial basis for the use of individuals, Federal government agencies, or persons eligible for licensing under either subparts B, C, D, or E of this part will be responsible for exercising effective operational control over all mobile and control stations that communicate with the base station. The base station licensee will be responsible for assuring that its system is operated in compliance with all applicable rules and regulations.

(b) Customers that operate mobile units on a particular Specialized Mobile Radio system will be licensed to that system. A customer that operates temporarily on more than one system will be deemed, when communicating with the other system, to be temporarily licensed to the other system and for that temporary period, the licensee of the other system will assume the same licensee responsibility for the customer's mobile station(s) as if the customer's stations were licensed to that other system.

5. A new § 90.658 is added to subpart S to read as follows:

§ 90.658 Loading data required for base station licensees of trunked Specialized Mobile Radio systems to acquire additional channels or to renew trunked systems licensed before June 1, 1993.

(a) A base station licensee of a trunked Specialized Mobile Radio system that applies for additional channels to expand an existing system or to construct a new system within 40 miles of its existing system, or a base station licensee of a trunked system applying for its first renewal in a waiting list area for a system licensed before June 1, 1993 must identify on the appropriate application form the number of mobiles and control stations loaded on its system as calculated in paragraph (b) of this section.

(b) The number described in paragraph (a) of this section must be calculated by averaging the number of mobiles and control stations operating on a licensee's system on the first business day of each of the six months immediately preceding the filing of an application and must be based on the licensee's business records for that period. Alternative calculations will be permitted upon good cause showings of special circumstances.

(c) Business records may constitute invoices, customer service agreements, customer lists or any other type of record kept in the ordinary course of business.

(d) The FCC will use the loading data required by this section to determine whether the licensee's existing system has a sufficient number of mobiles as required by 47 CFR Chapter I to qualify for additional channels or for the first renewal of trunked systems licensed before June 1, 1993.

6. A new § 90.659 is added to subpart S to read as follows:

§ 90.659 Change in number or location of base stations or transmitters.

(a) Licensees of trunked Specialized Mobile Radio systems are exempt from the requirement under § 90.135(a)(5) to file an application for modification of license when there is a change in the location or number of fixed, control, or mobile transmitters from that authorized, including area of mobile operations.

(b) Licensees of conventional Specialized Mobile Radio channels are not exempt from the requirement under § 90.135(a)(5) to file an application for modification of license when there is a change in the location or number of fixed, control, or mobile transmitters from that authorized, including area of mobile operations.

(c) Licensees of trunked and conventional Specialized Mobile Radio systems are not exempt from the requirement under § 90.135(a)(5) to file an application for modification of license when there is a change in the location or number of base stations.

Federal Communications Commission.

Donna R. Searcy,

Secretary.

[FR Doc. 92-21467 Filed 9-4-92; 8:45 am]

BILLING CODE 6712-01-M

NATIONAL AERONAUTICS AND SPACE ADMINISTRATION

48 CFR Parts 1801, 1803, 1804, 1805, 1806, 1807, 1808, 1809, 1813, 1815, 1816, 1819, 1822, 1823, 1825, 1827, 1831, 1832, 1833, 1836, 1837, 1842, 1845, 1849, 1851, 1852, 1853, and 1870

[NASA FAR Supplement Directive 89-11]

RIN 2700-AB15

Acquisition Regulation; Miscellaneous Amendments to NASA FAR Supplement

AGENCY: Office of Procurement, Procurement Policy Division, NASA.

ACTION: Final rule.

SUMMARY: This document amends the NASA Federal Acquisition Regulation Supplement (NFS) to reflect a number of miscellaneous changes dealing with NASA internal or administrative matters. The major changes involve: (1) Office of Procurement (Code H) Reassignments; (2) Revisions to NASA Headquarters Mail Codes; (3) Reconciliation of Deviation Procedures; (4) List of Parties Excluded from Procurement Programs; (5) Small Purchase Procedures; (6) Certified Cost and Pricing Data; (7) Price Negotiation Memorandum; (8) Calculation of Facilities Capital Cost of Money; (9) Ordering from Government Supply Sources; (10) Increase of Threshold for Reporting of Subcontracts; and (11) Addition of Provision and Clause Matrix.

EFFECTIVE DATE: August 31, 1992.

FOR FURTHER INFORMATION CONTACT: Thomas J. Whelan, Deputy Director, Procurement Policy Division (Code HP), Office of Procurement, NASA Headquarters, Washington, DC 20546, Telephone: (202) 358-0475.

SUPPLEMENTARY INFORMATION:

Availability of NASA FAR Supplement

The NASA FAR Supplement, of which this rule is a part, is available in its entirety on a subscription basis from the Superintendent of Documents, Government Printing Office, Washington, DC 20402. Cite GPO Subscription Stock Number 933-003-00000-1. It is not distributed to the public, either in whole or in part, directly by NASA.

Impact

The Director, Office of Management and Budget (OMB), by memorandum dated December 14, 1984, exempted certain agency procurement regulations from Executive Order 12291. The regulations herein are in the exempted category. NASA certifies that this regulation will not have a significant economic effect on a substantial number of small entities under the Regulatory Flexibility Act (5 U.S.C. 601 *et seq.*). The regulation imposes no new burdens on the public within the ambit of the Paperwork Reduction Act, as implemented at 5 CFR part 1320, nor does it significantly alter any reporting or recordkeeping requirements currently approved under OMB control number 2700-0042.

List of Subjects in 48 CFR Parts 1801, 1803, 1804, 1805, 1806, 1807, 1808, 1809, 1813, 1815, 1816, 1819, 1822, 1823, 1825, 1827, 1831, 1832, 1833, 1836, 1837, 1842, 1845, 1849, 1851, 1852, 1853, and 1870

Government procurement.

Don G. Bush,

Assistant Administrator for Procurement.

1. The authority citation for 48 CFR parts 1801, 1803, 1804, 1805, 1806, 1807, 1808, 1809, 1813, 1815, 1816, 1819, 1822, 1823, 1825, 1827, 1831, 1832, 1833, 1836, 1837, 1842, 1845, 1849, 1851, 1852, 1853, and 1870 continues to read as follows:

Authority: 42 U.S.C. 2473(c)(1).

PART 1801—FEDERAL ACQUISITION REGULATIONS SYSTEM

2. Part 1801 is amended as set forth below:

1801.104–370 [Amended]

a. In section 1801.104–370, paragraph (a), the telephone number "(202–453–2105)" is revised to read "(202–358–2105)."

b. In section 1801.104–370, paragraph (e), "Code DBD–4" is revised to read "Code JBD–4."

c. In section 1801.104–370, paragraph (f), the telephone number "(202–453–2080)" is revised to read "(202–358–2080)," "Code NA–2" is revised to read "Code JM–2," and "Code DBD–4" is revised to read "Code JBD–4."

d. In section 1801.104–370, paragraph (g), the telephone number "(202–453–2088)" is revised to read "(202–358–2088)."

1801.270 [Amended]

e. In section 1801.270, the phrase "Code HP analyst responsible for the applicable subject matter." is revised to read "Code HP analyst responsible under 1801.370 for the applicable subject matter."

1801.370 [Amended]

f. In section 1801.370, paragraphs (a)(1)(ii), (a)(1)(iii), (a)(2)(i), and (b) are revised to read as follows:

(a) * * *

(1) * * *

(ii) FAR and NFS Substantive areas—

Part 1:	
1.602–3	Bennett
Balance of 1.6	Pesnell
1.7	Pesnell
All Other Subparts.	King
Part 2	Brown
Part 3	Sudduth
Part 4:	
4.6	Baker/Brown
4.9	Baker/Brown
4.72	Evey/Brown
All Other Subparts.	Brown
Part 5	Jeffries
Part 6:	
6.5	Nelson/Pesnell
All Other Subparts.	Pesnell
Part 7:	
7.71	Evey/Sudduth
7.72	Nelson/Sudduth
All Other Subparts.	Sudduth
Part 8:	
8.3	Brown
All Other Subparts.	Brown
Part 9:	
9.4	Brundage
All Other Subparts.	Pesnell
Part 10:	
10.002(c)	Pesnell
All Other Subparts.	Sudduth
Part 11	Sudduth
Part 12:	
12.1	Brown
12.2	Brundage
12.3	Brown
12.4	Brown
12.5	Brundage
Part 13:	
13.71	Dussault/Brown
All Other Subparts.	Brown
Part 14	Brown
Part 15:	
15.1	Jeffries
15.4	Jeffries
15.5	Sudduth
15.6	Whelan
15.7	Jeffries
15.8	Guenther/King
15.9	Guenther/King
15.10	Brundage
Part 16	Guenther/Pesnell
Part 17	Sudduth
Part 19	Jeffries/Rosen/Deback
Part 20	Jeffries
Part 22	Pesnell/Gilson
Part 23:	
23.5	Sudduth
All Other Subparts.	Brown
Part 24	Brundage
Part 25	Jeffries
Part 26	Sudduth
Part 27	Kempf/Pesnell
Part 28	Pesnell
Part 29	Bennett
Part 30	LeCren/King
Part 31	LeCren/King
Part 32	LeCren/King
Part 33	Brundage
Part 34	Sudduth
Part 35	Sudduth
Part 36	Pesnell/Stamper
Part 37:	
37.2	Baker/Pesnell
All Other Subparts.	Pesnell/Gilson
Part 38	Brown
Part 39	Bennett
Part 42:	
42.7	LeCren/King
42.8	LeCren/King
42.10	Guenther/King
42.12	Baker
All Other Subparts.	Pendleton/Bennett
Part 43	Pendleton/Pesnell
Part 44	Jeshow/Jeffries
Part 45	Bennett/Pendleton/Wilchek
Part 46	Bennett/Jeshow
Part 47	Jeffries/Brunner
Part 48	Wilson/Jeffries
Part 49	Bennett
Part 50:	
50.4	O'Neill/Pesnell
All Other Subparts.	Brundage
Part 51	Brown
Part 52	Brown/All analysts in assigned areas
Part 53	Brown
Part 70:	
70.3	Evey/Sudduth
70.4	Dussault/Sudduth
All Other Subparts.	Sudduth

(iii) Publication Matters—Brown

* * * * *

(2) * * *

(i) All areas, including Federal Demonstration Project—Sudduth

* * * * *

(b) Consolidated Contact List.

Name (Code)	(202)
Baker, Herbert H. (HM)	358–0460
Bennett, Carol E. (HP)	358–0479
Brown, Madelon C. (HP)	358–0480
Brundage, Paul D. (HP)	358–0481
Brunner, Peter E. (JIB)	453–2975
Deback, Thomas L. (HS)	358–0431
Dussault, Thomas W. (HM)	358–0463
Evey, Walker L. (HS)	358–2080
Gilson, Gordon K. (JL)	453–2882
Guenther, Anne (HC)	358–0003
Jeffries, Kenneth I. (HP)	358–0482
Jeshow, J. Ronald (HK)	358–0486
Kempf, Robert F. (GP)	453–2424
King, Bruce C. (HP)	358–0483
LeCren, Joseph (HC)	358–0444
Maraist, William J. (HP)	358–2105
Nelson, Harold (HS)	358–0440
O'Bryant, Cynthia B. (HP)	358–2105
O'Neill, Deborah A. (HS)	358–0428
Pendleton, Larry G. (HK)	358–0478
Pesnell, James A. (HP)	358–0484
Rosen, Eugene D. (K)	358–2088
Smith, Phillip T. (BFC)	358–1026
Stamper, William (JXF)	358–1133
Sudduth, David (HP)	358–0485
Whelan, Thomas J. (HP)	358–2105
Wilchek, Billie E. (JIE)	453–2989
Wilson, Roger (HK)	358–0498

1801.471 [Amended]

g. In section 1801.471, paragraph (a) is revised to read as follows:

(a) Requests for authority to deviate from the provisions of the FAR or of this Regulation shall be:

(1) submitted to the Office of Procurement, NASA Headquarters (Code HS) (but see 1831.101 for deviations from FAR cost principles);

(2) signed by the procurement officer or, in that person's absence, by the acting procurement officer; and

(3) submitted as far in advance as the exigencies of the situation will permit.

* * * * *

PART 1803—IMPROPER BUSINESS PRACTICES AND PERSONAL CONFLICTS OF INTEREST

1803.804 [Amended]

3. In section 1803.804, paragraph (a), the phrase "Procurement Management Division" is revised to read "Procurement Systems Division."

PART 1804—ADMINISTRATIVE MATTERS

4. Part 1804 is amended as set forth below:

1804.470–3 [Amended]

a. In section 1804.470–3, paragraph (a), the words "in consort" are removed and the word "together" is added in their place.

1804.601 [Amended]

b. In section 1804.601, the phrase "The Headquarters Procurement Management Division" is revised to read "The Headquarters Procurement Systems Division."

1804.671–4 [Amended]

c. In section 1804.671–4, paragraph (k), the phrase "Procurement Management Division" is revised to read "Procurement Systems Division."

d. In section 1804.671–4, paragraph (w), Code 3, the citation "FAR 15.506–2" is revised to read "FAR 15.608."

1804.671–6 [Amended]

e. In section 1804.671–6, paragraph (e), the words "(except FSS orders)" are added after the word "procurements" and before the word "of."

1804.676 [Amended]

f. In section 1804.676, the phrase "Educational Affairs Division, University Programs Office, NASA Headquarters (Code XEU)" is revised to read "Education Division, Higher Education Branch, NASA Headquarters (Code FEH)."

PART 1805—PUBLICIZING CONTRACT ACTIONS

1805.403–70 [Amended]

5. In section 1805.403–70, "(Code XC)" is revised to read "(Code L)."

PART 1806—COMPETITION REQUIREMENTS

1806.303–1 [Amended]

6. In section 1806.303–1, paragraph (b), "(Code XI)" is revised to read "(Code IRD)."

PART 1807—ACQUISITION PLANNING

1807.7206 [Amended]

7. In section 1807.7206, paragraph (b)(2), the words "semiannual annual forecasts" are revised to read "semiannual forecasts."

PART 1808—REQUIRED SOURCES OF SUPPLIES AND SERVICES

1808.303, 1808.304–571, 1808.305, 1808.307–70 [Amended]

8. In sections 1808.303(a), 1808.304–571, 1808.305 (a) introductory text and (b), and 1808.307–70, the phrase "Facilities Division" is revised to read "Facilities Engineering Division" and the parenthetical phrase "(Code NX)" is revised to read "(Code JX)" wherever it appears.

PART 1809—CONTRACTOR QUALIFICATIONS

9. Part 1809 is amended as set forth below:

1809.106–70 [Amended]

a. In paragraph (d)(1) of this section, the words "or facsimile" are added after the word "telegraphic" and before the word "communication."

b. In paragraph (d)(2) of this section, the word "to" is added after the word "furnished" and before the word "the."

c. In paragraph (d)(3) of this section, the reference "DOD 4105.59–H" is revised to read "DLAH 410–5.4."

1809.404 [Amended]

d. In section 1809.404, a new paragraph (c) is added to read as follows:

* * * * *

(c) For the purpose of obtaining copies of the list, field installation procurement offices shall notify Code HP of how many copies they want and provide a single mailing address at the installation. Code HP will, in turn, place the order for the copies which will be mailed directly to the installation.

PART 1813—SMALL PURCHASE AND OTHER SIMPLIFIED PURCHASE PROCEDURES

10. Section 1813.104, is amended by revising paragraph (a) to read as follows:

1813.104 Procedures.

(a) Small purchase procedures are exempt from the requirements of FAR Part 6.

* * * * *

PART 1815—CONTRACTING BY NEGOTIATION

11. Part 1815 is amended as set forth below:

1815.613–71 [Amended]

a. In section 1815.613–71, paragraph (b)(5)(ii)(A), the words "in concert" are removed and the word "together" is added in their place.

b. In section 1815.804–3, existing paragraphs (a) through (d) are redesignated as paragraphs (b) through (e), and a new paragraph (a) is added to read as follows:

1815.804–3 Exemptions from or waiver of submission of certified cost or pricing data.

(a)(1) The term "lowest evaluated price," as used in FAR 15.804–3(b), is defined to include all of the factors (for example, mission suitability, cost, past performance, etc.) used in the evaluation of proposals (but see paragraph (a)(2) of this section).

(2) In order for adequate price competition to exist, cost or price must be a substantial factor in the evaluation of proposals. Cost or price shall be considered a substantial factor if the source selection will be based on the most advantageous offer to the Government, price or cost or other factors considered, and cost or price, although not necessarily the determinative factor, will contribute significantly to the source selection decision.

(3) The adequate price competition exemption is applicable to both fixed-price and cost-reimbursement type procurements.

(i) The use of this exemption for a cost-reimbursement procurement requires the careful exercise of judgment on the part of the contracting officer based on the application of the guidance in FAR 15.804–3(b) and the NFS to the facts of each procurement. The instances when its use under cost-reimbursement procurements would be appropriate should be limited. One reason is that, unlike fixed-price type contracts, where the final cost to the Government is set at the negotiated contract amount, in cost-reimbursement contracts, the contract amount is only an estimate of the Government's final cost. As a consequence, the failure to obtain certified cost or pricing data could result in a competing contractor intentionally underestimating its costs

for the purpose of winning the award, which could then cause the actual contract costs to significantly exceed those proposed.

(ii) If and when negotiations conducted with a successful offeror after receipt of Best and Final Offers result in a substantial change in that offeror's price, the validity of any adequate price competition exemption which previously applied could be nullified, regardless of contract type.

(4) When the decision is made to apply the adequate price competition exemption, that decision shall be documented in the contract file. In addition, for cost-reimbursement procurements, that document shall be signed by the procurement officer and a copy provided to the Contract Pricing and Finance Division, Code HC.

* * * * *

1815.804-3 [Amended]

c. In section 1815.804-3, newly designated paragraph (d), the phrase "Contract Pricing and Finance Office" is revised to read "Contract Pricing and Finance Division."

1815.807-72 [Amended]

d. In section 1815.807-72, paragraph (a), the phrase "Program Operations Division" is revised to read "Competition and Program Operations Division."

e. In section 1815.808, paragraph (b) is revised to read as follows:

1815.808 Price negotiation memorandum.

* * * * *

(b) When the PNM is a "stand-alone" document, it shall contain the information required by the FAR and NFS for both PPM's and PNM's. However, when a PPM has been prepared under 1815.807, the subsequent PNM need only provide any information required by FAR 15.808 that was not provided in the PPM. The FAR 15.808(a)(4) requirement, that the current status of the contractor's systems be included, must be addressed in the PNM. If any of these systems do not apply to a particular procurement, the reasons for not including their status must be explained. Also, explain the differences between the prenegotiation objective position and the final negotiated settlement, including each proposed subcontract that meets the requirement of FAR 15.806-2(a). If, at the time of negotiated settlement for cost-reimbursement type prime contracts, there remain significant pricing uncertainties with respect to any proposed subcontract that meets the requirement of FAR 15.806-2(a), each such subcontract shall be discussed in the PNM, identified in the contract Schedule for special surveillance, and set aside for subcontract consent by the NASA contracting officer in accordance with FAR 44.2 and NFS 1844.102-70.

f. In section 1815.970-3, paragraph (b) is revised to read as follows:

1815.970-3 Facilities capital cost of money.

* * * * *

(b) Facilities capital cost of money shall be calculated using the format of DD Form 1861, Contract Facilities Capital Cost of Money. Overhead pools, for example, engineering, manufacturing, and G&A, are listed by year in the first column of the DD Form 1861 labeled Pool. The allocation base figure for each overhead pool objective is listed by year in the second column. Each allocation base is then multiplied by the recommended facilities capital cost of money factor for that base. The total facilities capital cost of money amounts appearing in the last column labeled Amount are totaled in the space provided in the line labeled Total. This total represents the estimated facilities capital cost of money amount for the contract and is the figure to be used to calculate the prenegotiation position memorandum objective cost and to reduce the profit objective in accordance with 1815.970-3(1). The lines labeled Treasury Rate and Facilities Capital Employed (Total Divided by Treasury Rate) and section 7 of the form labeled Distribution of Facilities Capital Employed do not apply to NASA and should be ignored.

* * * * *

PART 1816—TYPES OF CONTRACTS

1816.207-70 [Amended]

12. In section 1816.207-70, paragraph (a), the word "rates(s)" is revised to read "rate(s)."

PART 1819—SMALL BUSINESS AND SMALL DISADVANTAGED BUSINESS CONCERNS

1819.505 [Amended]

13. In section 1819.505, paragraph (c), the phrase "paragraph (f)" is revised to read "paragraph (e)."

PART 1822—APPLICATION OF LABOR LAWS TO GOVERNMENT ACQUISITION

14. Part 1822 is amended as set forth below:

Subpart 1822.1 [Amended]

a. In subpart 1822.1, "Code NR" is revised to read "Code JL." in the following places:

A. 1822.101-(b)

B. 1822.101-4

1822.302 [Amended]

b. In section 1822.302, the phrase "Code NR" is revised to read "Code JL."

Subpart 1822.4—[Amended]

c. In subpart 1822.4, the phrase "Code NR" is revised to read "Code JL" in the following places:

A. 1822.403-4

B. 1822.404-3

C. 1822.406-2

D. 1822.406-8

E. 1822.406-9

F. 1822.406-11

Subpart 1822.6—[Amended]

d. In subpart 1822.6, the phrase "Code NR" is revised to read "Code JL" in the following places:

A. 1822.604-2

B. 1822.608-4

Subpart 1822.10—[Amended]

e. In subpart 1822.10, the phrase "Code NR" is revised to read "Code JL" in the following places:

A. 1822.1001

B. 1822.1003

C. 1822.1007 (a) and (b)

PART 1823—ENVIRONMENT, CONSERVATION, OCCUPATIONAL SAFETY, AND DRUG-FREE WORKPLACE

1823.7004 [Amended]

15. In section 1823.7004, paragraph (f), the word "clause" is revised to read "provision."

PART 1825—FOREIGN ACQUISITION

16. Part 1825 is amended as set forth below:

a. In section 1825.402, the dollar figure "$172,000" is revised to read "$176,000."

1825.402-70 [Amended]

b. In section 1825.402-70, "(Code XI)" is revised to read "(Code IRD)."

1825.403-70 [Amended]

c. In section 1825.403-70, "Office of External Relations (Code X)" is revised to read "Office of Policy Coordination and International Relations (Code I)."

Subpart 1825.10—[Removed]

d. Subpart 1825.10 is removed in its entirety.

1825.7002, 1825.7003, 1825.7006 [Amended]

e. In sections 1825.7002, 1825.7003, and 1825.7006(a) and (c), "(Code XI)" is revised to read "(Code IRD)."

PART 1827—PATENTS, DATA, AND COPYRIGHTS

1827.670–2 [Amended]

17. In sections 1827.670–2, the section heading is revised to read "Contract clause," and, in the text, the word "Agreement" is revised to read "Agreements."

PART 1831—CONTRACT COST PRINCIPLES AND PROCEDURES

1831.205–70 [Amended]

18. In section 1831.205–70, the paragraph designation "(b)" is removed.

PART 1832—CONTRACT FINANCING

19. Subpart 1832.5 is amended as set forth below:

a. Section 1832.503–4 is amended by revising the section heading to read as follows:

1832.503–4 Approval of progress payment requests.

* * * * *

b. Section 1832.503–470 is added to read as follows:

1832.503–470 Contract clause.

The contracting officer shall insert the clause at 18–52.232–70, NASA Progress Payment Rates, in all solicitations and fixed-price contracts under which the Government will provide progress payments based on costs.

PART 1833—PROTESTS, DISPUTES, AND APPEALS

20. Part 1833 is amended as set forth below:

1833.103 [Amended]

a. In section 1833.103, paragraph (b), the citation "FAR 33.103(b)(1)" is revised to read "FAR 33.103(a)(3)."

1833.104 [Amended]

b. In section 1833.104, paragraph (a)(2), the sentence beginning with "The Contracting Officer's Statement shall . . ." is revised to read "The contracting officer's statement shall. . . ."

1833.211, 1833.211–70 [Amended]

c. In sections 1833.211 and 1833.211–70, in paragraph (b) of the revised FAR paragraph, "Code NC" is revised to read "Code JD."

PART 1836—CONSTRUCTION AND ARCHITECT-ENGINEER CONTRACTS

21. Part 1836 is amended as set forth below:

1836.602–70 [Amended]

a. In section 1836.602–70, paragraph (b)(1) and (b)(2), the phrase "Associate Administrator for Management" is revised to read "Associate Administrator for Management Systems and Facilities."

1836.602–71 [Amended]

b. In section 1836.602–71, paragraph (b), the word "chair-person" is revised to read "chairperson."

PART 1837—SERVICE CONTRACTING

22. Part 1837 is amended as set forth below:

1837.205 [Amended]

a. In section 1837.205, paragraph (c), the phrase "Associate Administrator for Management" is revised to read "Associate Administrator for Management Systems and Facilities."

1837.205–70 [Amended]

b. In section 1837.205–70, paragraphs (a) and (b), the phrase "Associate Administrator for Management (Code N)" is revised to read "Associate Administrator for Management Systems and Facilities (Code J)."

PART 1842—CONTRACT ADMINISTRATION

23. Part 1842 is amended as set forth below:

1842.101 [Amended]

a. In section 1842.101, the phrase "Defense and Intergovernmental Relations Division (Code XD)" is revised to read "Defense Division (Code ID)."

1842.174 [Amended]

b. In section 1842.174, paragraph (b), "(Code HP)" is revised to read "(Code HK)."

1842.202–70 [Amended]

c. In section 1842.202–70, paragraph (d), the phrase "Headquarters Supply and Equipment Management Branch, Code, NIE" is revised to read "Headquarters Supply and Equipment Management Office, Code JIE."

PART 1845—GOVERNMENT PROPERTY

24. Part 1845 is amended as set forth below:

1845.106–70 [Amended]

a. In section 1845.106–70, paragraph (e), the phrase "Supply and Equipment Management Division (Code NIE)" is revised to read "Supply and Equipment Management Office (Code JIE)."

1845.405 [Amended]

b. In section 1845.405, paragraph (b), the phrase "Supply and Equipment Management Division (Code NIE)" is revised to read "Supply and Equipment Management Office (Code JIE)," and "(Code XI)" is revised to read "(Code IRD)."

1845.407 [Amended]

c. In section 1845.407, paragraph (a), the phrase "Supply and Equipment Management Division (Code NIE)" is revised to read "Supply and Equipment Management Office (Code JIE)."

1845.608–6, 1845.610–2 [Amended]

d. In sections 1845.608–6 and 1825.610–2, the phrase "Supply and Equipment Management Division (Code NIE)" is revised to read "Supply and Equipment Management Office (Code JIE)."

1845.7203 [Amended]

e. In section 1845.7203, the phrase "Supply and Equipment Management Division" is revised to read "Supply and Equipment Management Office" and "Code NIE" is revised to read "Code JIE" in each occurrence.

1845.7205 [Amended]

f. In section 1845.7205, paragraphs (f)(1) and (i), the phrase "Code NIE" is revised to read "Code JIE."

1845.7213 [Amended]

g. In section 1845.7213, paragraph (c)(1), the phrase "Supply and Equipment Management Division (Code NIE)" is revised to read "Supply and Equipment Management Office (Code JIE)."

PART 1849—TERMINATION OF CONTRACTS

1849.111–71 [Amended]

25. In section 1849.111–71, paragraph (a)(1), the dollar amount "$50,000" is revised to read "$100,000."

PART 1851—USE OF GOVERNMENT SOURCES BY CONTRACTORS

26. Part 1851 is amended as set forth below:

1851.102 [Amended]

a. In section 1851.102, paragraph (b), the phrases "Supply and Equipment Management Division" and (Code NIE)" and revised to read "Supply and

Equipment Management Office" and "(Code JIE)," respectively.

b. Section 1851.103 is revised to read as follows:

1851.103 Ordering from Government supply sources.

(a) All orders for materials from Government supply sources shall contain the statement in paragraph (c)(2)(i) or (c)(2)(ii), as appropriate, of the authorization format set forth in 1851.102 .

(b) Contracting officers shall use NHB 4100.1, NASA Materials Inventory Management Manual, to obtain activity address codes (AAC) to enable use of FEDSTRIP and MILSTRIP for requisitioning material from Federal and military supply sources.

PART 1852—SOLICITATION PROVISIONS AND CONTRACT CLAUSES

27. Part 1852 is amended as set forth below:

a. Section 1852.000 is revised to read as follows:

1852.000 Scope of part.

This part, in conjunction with FAR Part 52—

(a) Gives instructions for using provisions and clauses prescribed by this Regulation and lower level provisions and clauses;

(b) Sets forth the provisions and clauses prescribed in this Regulation, and

(c) Presents a matrix listing the NFS provisions and clauses applicable to each principal contract type and/or purpose (e.g., fixed-price supply, cost-reimbursement research and development).

b. In section 1852.101, the section heading "Using FAR Part 52" is revised to read "Using Part 52", the existing paragraph is redesignated as paragraph "(a)" and new paragraphs "(b)" and "(c)" are added to read as follows:

1852.101 Using Part 52.

* * * * *

(b) The NFS matrix in Subpart 1852.3 is formatted similarly to the FAR matrix described in FAR 52.101(e). The first page of the NFS matrix contains a key to column headings, a dollar threshold chart, and requirement symbols. To fully determine the applicability of a provision or clause in the "required-when-applicable" and "optional" categories, Contracting Officers shall refer to the NFS text (cited in the matrix) that prescribes its use.

(c) The NFS matrix may be reproduced by field installations for the purpose of supplementing it with installation-developed provisions and clauses.

1852.204-70 [Amended]

c. In section 1852.204-70, the citation "1804.672" is revised to read "1804.672(b)."

d. In the title of the clause, the date "DEC 1988" is revised to read "AUG 1992."

e. In paragraph (a) of the clause, the sentence ending with "exceeding $10,000 as soon as possible after its execution:" is revised to read "exceeding $25,000 within 10 working days after its execution:".

f. In paragraph (c) of the clause, the word in quotation marks, "Subcontract," is italicized, and the dollar amount "$10,000" is revised to read "$25,000."

g. In paragraph (d) of the clause, the phrase in quotation marks, "Research and development," is italicized.

h. In paragraph (e)(1) of the clause, the dollar amount "$50,000" is revised to read "$100,000."

1852.208-83 [Amended]

i. In section 1852.208-83, the citation "1808.002-71" is revised to read "1808.002-76."

1852.216-81 [Amended]

j. In section 1852.216-81, the citation "1816.307-70(f)" is revised to read "1816.307-70(e)."

1852.223-73 [Amended]

k. In section 1852.223-73, in the introductory paragraph of Alternate I, the word "clause" is removed and the word "provision" is added in its place.

1852.228-70 [Amended]

l. In section 1852.228-70, the citation "1828.370" is revised to read "1828.370(a)."

1852.228-76 [Amended]

m. In section 1852.228-76, the citation "1828.373" is revised to read "1828.373 (a) and (b)."

1852.232-70 [Amended]

n. In section 1852.232-70, the citation "1832.503-4" is revised to read "1832.503-470."

1852.232-81 [Amended]

o. In section 1852.232-81, the citation "1832.705-270(c)" is revised to read "1832.705-270(b)."

1852.242-72 [Amended]

p. In section 1852.242-72, in the title to the clause, the date "SEPT 1989" is revised to read "AUG 1992," and in paragraph (a) of the clause, "Washington's Birthday" is revised to read "President's Birthday."

q. Subpart 1852.3 is added to read as follows:

Subpart 1852.3—Provision and Clause Matrix

1852.300 Scope of subpart.
1852.301 Solicitation Provisions and Contract Clauses (Matrix).

1852.300 Scope of subpart.

The matrix in this subpart contains a column for each principal type and/or purpose of contract. See the first page of the matrix for the key to column headings, the dollar threshold chart, and requirement symbols.

1852.301 Solicitation provisions and contract clauses (Matrix)

PART 1853—FORMS

28. Part 1853 is amended as set forth below:

1853.103 [Amended]

a. In section 1853.103, "(Code NTD-1)" is revised to read "(Code JTD-1)."

1853-242.70 [Amended]

b. In section 1853.242-70, paragraph (c) is revised to read as follows:

* * * * *

(c) NASA Form 1431, Letter of Acceptance of Contract Administration Delegation. NASA Form 1431, prescribed at 1842.202-70(a)(8) (i), (ii), and (iii), shall be used in conjunction with NASA Form 1430 to record receipt and acceptance of delegation by other agencies.

* * * * *

PART 1870—NASA SUPPLEMENTARY REGULATIONS

29. Part 1870 is amended as set forth below:

1870.103 [Amended]

a. In 1870.103, appendix C to appendix I, section II, paragraph A.3.a., the phrase "Office of External Relations, Code XID" is revised to read "Office of Policy Coordination and International Relations, Code IRD," and in paragraph A.3.d., the phrases "Code XID" and "Office of External Relations" are revised to read "Code IRD" and "Office of Policy Coordination and International Relations," respectively.

1870.303 [Amended]

b. In 1870.303, chapter 3, section 303, paragraph 5, paragraphs "(a)", "(b)", and "(c)" are revised to read "a.", "b.", and "c."

c. In 1870.303, chapter 4, section 407, in paragraphs 2.b.3. and 2.c., the words "in

concert" are removed and the word "together" is added in their place.

[FR Doc. 92-21360 Filed 9-4-92; 8:45 am]
BILLING CODE 7510-01-M

INTERSTATE COMMERCE COMMISSION

49 CFR Part 1321

[Ex Parte No. MC-208]

Nonoperating Motor Carriers—Collection of Undercharges

AGENCY: Interstate Commerce Commission.

ACTION: Final rules.

SUMMARY: The Commission is issuing final rules providing for prior Commission review of certain classes of undercharge claims by nonoperating and certain other motor carriers. These rules are needed because there is tremendous potential and actual abuse in rebillings involving defunct carriers. The rules provide that a nonoperating carrier may not unilaterally disavow the tariff rate under which a shipment moved, or the contract if the shipment moved as contract carriage, unless and until a Commission pre-review of the contemplated undercharge claim, to determine whether there is a colorable undercharge claim which may be asserted. The rules also apply to pending claims and to undercharge claims that have already been paid pursuant to a settlement. The intent of the rules is to establish a process to eliminate facially baseless claims.

EFFECTIVE DATE: The rules are effective September 23, 1992.

FOR FURTHER INFORMATION CONTACT: Thomas Dahl, (202) 927-5289, or Richard Felder, (202) 927-5610 [TDD for hearing impaired (202) 927-5621].

SUPPLEMENTARY INFORMATION: The Commission instituted a rulemaking proceeding on its own motion (June 4, 1992, 57 FR 23568) to add regulations addressing the undercharge collection practices of nonoperating motor carriers. The full text of the final regulations are set forth below.

Additional information is contained in the Commission's decision. To obtain a copy of the full decision, write to, call, or pick up in person from: Dynamic Concepts, Inc., room 2229, Interstate Commerce Commission Building, Washington, DC 20423. Telephone: (202) 289-4357/4359. [Assistance for the hearing impaired is available through TDD services (202) 927-5721.]

Environmental and Energy Considerations

The Commission concludes that this action will not significantly affect either the quality of the human environment or the conservation of energy resources.

Regulatory Flexibility Act Certification

The Commission preliminarily concluded that the proposed regulations would not have a significant economic impact on a substantial number of small entities. Based on the comments, it again arrives at the same conclusion. These rules are needed to protect the shipping public and the transportation industry from a rebilling problem that has become acute. However, the rules should not impose additional regulatory requirements for a substantial number of small entities. Rather, they are intended to make clear the kinds of situations where preliminary review by the Commission of undercharge claims is required, and to establish a process for this initial review. To the extent that the regulatory issues would ultimately be referred to the Commission anyway, under the doctrine of primary jurisdiction, these rules simply speed up the process and eliminate the need to pursue and defend against frivolous claims. None of the commenters argued that the proposal would have a significant impact on small entities.

List of Subjects in 49 CFR Part 1321

Motor carriers, Undercharges.

Decided: August 28, 1992.

By the Commission, Chairman Philbin, Vice Chairman McDonald, Commissioners Simmons, Phillips, and Emmett. Commissioner Simmons commented with a separate expression.

Sidney L. Strickland, Jr.,
Secretary.

For the reasons set forth in the Preamble, the Commission amends title 49, chapter X, of the Code of Federal Regulations by adding a new part 1321 as follows:

PART 1321—NONOPERATING MOTOR CARRIERS—COLLECTION OF UNDERCHARGES

Sec.

1321.1 Nonoperating motor carriers—undercharge collection.
1321.2 Intent and scope of rules in this part.
1321.3 Disavowal of tariff rates.
1321.4 Disavowal of contract carrier charges.
1321.5 Notice of shipper or other party from whom undercharges are sought.
1321.6 Limitation of rules in this part.
1321.7 Operating carriers.

Authority: 49 U.S.C. 10101, 10102, 10321, 10521, 10701, 10702, 10704, 10741, 10743, 10761, 10762, 10764, 10921, 10923, 11144, 11901, 11903, 11904, 11906; 5 U.S.C. 553.

§ 1321.1 Nonoperating motor carriers—undercharge collection.

Motor carriers, including subsidiaries, subject to the rules in this part are those that have ceased operation (because of bankruptcy, voluntary liquidation or otherwise) or are ceasing operations. Additionally, the carrier representatives, estates, assigns, or others who may assert undercharge claims purportedly founded on the regulatory requirements of the Interstate Commerce Act or Commission regulations, are subject to the rules in this part at all stages of the collection process, including the initial phase of rebilling. The regulations in this part extend to pending claims (including claims already pending in court), settled claims of carriers that have not terminated their existence, and future claims. For purposes of these regulations, the term "shipper" applies broadly to anyone receiving undercharge claims (*i.e.*, brokers and freight forwarders as well as shippers). The carrier or its representative must file its claims at this Commission prior to, or concurrently with, a court action, except during a 30-day transition phase extending from the effective date of these regulations, which is September 23, 1992. The carrier or its representative must certify that all underlying claims are supported with the appropriate underlying documents in the carrier's possession. The carrier may not make any offer to settle prior to the Commission's initial determination that the carrier may pursue the undercharge claims. However, the regulations in this part are not intended to preclude a carrier from filing a court action, when necessary to preserve its claim from being barred by the statute of limitations, so long as it does not further prosecute the claim until it has obtained Commission approval to do so.

§ 1321.2 Intent and scope of rules in this part.

The rules in this part provide that a nonoperating motor carrier may not unilaterally disavow the tariff rate under which a past shipment moved, or the contract if the shipment moved as contract carriage, without the Commission's preliminary review and approval of the contemplated undercharge claim as a permissible claim. At the prior review stage, the Commission will not address the ultimate merit of the undercharge claim, but merely determine whether or not there is a valid, colorable undercharge claim which may be asserted. Our approval of the claim at that stage is not

intended to limit a shipper's defenses to the claim, nor affect a court's obligation to refer any regulatory issues that are raised to us, under the doctrine of primary jurisdiction, if and when a collection suit is filed. Rather, these rules are designed merely to screen out and prevent undercharge claims that lack a legitimate or cognizable basis, so that shippers are not required to defend themselves against baseless claims.

§ 1321.3 Disavowal of tariff rates.

A person subject to this part seeking to rebill for a past shipment based on the substitution of a different (higher) tariff rate for the tariff rate billed at the time of shipment, whether on lawfulness, reasonableness, or applicability grounds, must obtain a Commission preliminary review and approval of a contemplated undercharge claim as a permissible claim, before attempting to substitute different tariff rates. However, this does not mean that the person must submit for approval each individual claim. Rather, in the event of multiple claims with the same basis, we will review representative claims for each class of claims upon which the person seeks to collect undercharges.

§ 1321.4 Disavowal of contract carrier charges.

A person subject to this part seeking to rebill for a past shipment based on the substitution of a common carrier tariff rate for contract carriage charges originally billed, must obtain Commission preliminary review and approval before attempting to substitute a (higher) tariff rate. However, this does not mean that the person must submit for approval each individual claim. Rather, in the event of multiple claims with the same basis, we will review representative claims for each class of claims upon which the person seeks to collect undercharges.

§ 1321.5 Notice to shipper or other party from whom undercharges are sought.

For *pending* claims where the shipper has already been notified of the rebilling, a person subject to this part seeking undercharges that are covered by these rules must notify the shipper in writing, within 60 days of the effective date of these regulations,which is September 23, 1992, that:

(a) The Commission will give a preliminary review of the basis for the undercharge claims under § 1321.3 or § 1321.4 (as appropriate);

(b) The person cannot make a settlement offer prior to the Commission's initial determination that the undercharge claims may be pursued; and

(c) The person must submit to the Commission for approval a sample letter or notice providing the notification required by paragraphs (a) and (b) of this section.

§ 1321.6 Limitation of rules in this part.

The provisions of this part do not apply to rebillings that:

(a) Seek to collect the (lowest applicable) tariff rate where the rate originally billed was not contained in a tariff on file with the Commission; or

(b) Seek to collect the unpaid portion of the originally billed tariff rate or contract charges, together with any interest or late payment charges that are permitted by Commission regulations.

§ 1321.7 Operating carriers.

The rules in this part do not apply to operating carriers including those which might be struggling to stay in business. However, they do apply to situations where a carrier is conducting only a token amount of service in order to avoid the operation of the rules. In such a situation, the Commission may determine *sua sponte* (or at the request of a shipper) after notice and opportunity to respond by the carrier that the motor carrier is within the reach of these rules.

[FR Doc. 92-21536 Filed 9-4-92; 8:45 am]
BILLING CODE 7035-01-M

DEPARTMENT OF COMMERCE

National Oceanic and Atmospheric Administration

50 CFR Parts 204 and 299

[Docket No. 920649-2149]

U.S. Nationals Fishing in the Russian Fisheries

AGENCY: National Marine Fisheries Service (NMFS), NOAA, Commerce.

ACTION: Final rule; effectiveness and enforcement of collection-of-information requirements.

SUMMARY: NMFS announces approval by the Office of Management and Budget (OMB) of collection-of-information requirements applicable to owners and operators of U.S. vessels fishing in the Russian fisheries. This rule establishes an effective date for the collection-of-information requirements, informs the public of its enforcement, and publishes the applicable OMB control number.

EFFECTIVE DATE: Section 299.5 (b), (c), and (d) published at 57 FR 33653 (July 30, 1992) and this rule are effective September 2, 1992.

FOR FURTHER INFORMATION CONTACT: John D. Kelly, (301) 713-2337.

SUPPLEMENTARY INFORMATION: An interim final rule to amend regulations applicable to U.S. nationals fishing in the Russian fisheries at 50 CFR part 299 was published July 30, 1992 (57 FR 33649). Section 299.5 (b), (c) and (d) contain collection-of-information requirements subject to the Paperwork Reduction Act that could not be enforced before the Office of Management and Budget (OMB) approved them and those paragraphs were not made effective in the July 30, 1992, interim final rule.

Section 299.5(b) requires the vessel owner and operator to submit to NMFS headquarters a permit abstract report.

Section 299.5(c) requires the owner and operator to submit to NMFS Alaska Region by telefax, a departure report and a return report.

Section 299.5(d) requires the vessel owner and operator to retain on board the vessel for 1 year after the end of the calendar year in which the report was submitted, all copies of all reports. Section 299.5(d) also requires that the vessel owner and operator must retain and make such records available for inspection upon request of an authorized officer at any time for 3 years after the end of the calendar year in which the report was generated, whether or not such records are aboard the vessel.

OMB has approved these collection-of-information requirements under OMB control number 0648-0228. Accordingly, § 299.5 (b), (c) and (d) are effective September 2, 1992 and will be enforced from that date on.

List of Subjects

50 CFR Part 204

Reporting and recordkeeping requirements.

50 CFR Part 299

Fisheries, Foreign fishing, Reporting and recordkeeping requirements, Russian Federation, Treaties, U.S.-Russia Agreement.

Dated: August 31, 1992.

Samuel W. McKeen,

Acting Assistant Administrator for Fisheries, National Marine Fisheries Service.

For the reasons set forth in the preamble, 50 CFR part 204 is amended as follows:

PART 204—OMB CONTROL NUMBERS FOR NOAA INFORMATION COLLECTION REQUIREMENTS

1. The authority citation for part 204 continues to read as follows:

Authority: Paperwork Reduction Act of 1980, 44 U.S.C. 3501–3520 (1982).

§ 204.1 [Amended]

2. In § 204.1(b), the table is amended by adding in the left hand column, in numerical order, "§ 299.5 (b), (c) and (d)" and adding in the right hand column, in a corresponding position "–0228".

[FR Doc. 92–21458 Filed 9–2–92; 8:45 am]
BILLING CODE 3510–22–M

50 CFR Parts 217 and 227

[Docket No. 920780–2180]

Sea Turtle Conservation; Shrimp Trawling Requirements

AGENCY: Department of Commerce.

ACTION: Interim final rule with request for comments.

SUMMARY: The Secretary of Commerce (Secretary) issues this interim final rule to continue to allow limitations on tow times as an alternative to the requirement to use turtle excluder devices (TEDs) by shrimp trawlers in a small area off the coast of North Carolina through September 30, 1992. This area exhibits intermittently high concentrations of a brown alga, *Diclyopteris* sp., that makes trawling with TEDs impracticable. Shrimp inhabit the alga, and fishermen wish to harvest the alga to catch the shrimp. When algal concentrations are high, TEDs may reduce shrimp retention by excluding a large portion of the algae and the shrimp within. The tow time alternative allows fishermen to harvest shrimp more productively. NMFS will monitor the situation to ensure there is adequate protection for sea turtles in this area when tow-times are allowed in lieu of TEDs, and to determine whether algal concentrations continue to make TED use impracticable.

DATES: This rule is effective from September 1, 1992 through September 30, 1992. Comments on this interim final rule must be submitted by October 1, 1992.

ADDRESSES: Comments on this interim final rule should be sent to Dr. Nancy Foster, Director, Office of Protected Resources, NMFS, 1335 East-West Highway, Silver Spring, MD 20910.

FOR FURTHER INFORMATION CONTACT: Phil Williams, NMFS National Sea Turtle Coordinator (301/713–2322) or Charles A. Oravetz, Chief, Protected Species Program, NMFS, Southeast Region (813/893–3366).

SUPPLEMENTARY INFORMATION:

Background

All sea turtles that occur in U.S. waters are listed as either endangered or threatened under the Endangered Species Act of 1973, U.S.C. 1531 *et seq.* (ESA). Incidental capture by shrimp trawlers has been documented for five species of sea turtles that occur in waters off of North Carolina. Regulations at 50 CFR parts 217 and 227 require shrimp trawlers 25 feet (7.6 m) long or longer in offshore waters of the Atlantic Area, which includes waters off North Carolina, to use approved TEDs in trawls from May 1 through August 31, each year. In a separate rulemaking, this requirement is being made applicable throughout the year. Shrimp trawlers less than 25 feet long in offshore waters of the Atlantic Area are required to limit tow times to 90 minutes or less, or use TEDs. Tow time is defined as the interval from trawl doors entering the water to trawl doors being removed from the water.

Recent Events

An interim final rule published on July 29, 1992 (57 FR 33452) allowed shrimpers to limit tow times rather than use TEDs through August 31, 1992 in a restricted area off the coast of North Carolina. The background and need for this exemption was thoroughly discussed in that rule, and will not be repeated here.

NMFS' review of the TED exemption program in the North Carolina restricted area indicates there are no documented sea turtle mortalities associated with this program. The State of North Carolina reports that shrimpers have generally complied with the tow-time restrictions. Fishing activity in the restricted area has been limited. While 42 vessels have registered for the TED exemption program, daily fishing activity has been limited to between 5 and 8 vessels.

However, the Secretary finds that there is nothing to indicate that the environmental conditions in the restricted area that were initially determined to make TED use impracticable have changed. Therefore, the Secretary extends the exemption for an additional 30 days.

Comments on the Interim Final Rule

NMFS requested comments on the interim final rule. Two comments were received. The U.S. Fish and Wildlife Service (USFWS) commented that it concurred with the rulemaking as long as there is an NMFS-approved observer on each shrimp trawler fishing without TEDs. USFWS commented that the low incidental take level allowed by this action could only be adequately monitored by observers monitoring the catch of every vessel. Response: NMFS agrees that an observer on board each vessel using tow times is a preferable means of monitoring the incidental take of turtles. However, NMFS does not believe that full observer coverage is necessary at this time. The NMFS-sponsored sea turtle stranding network has not reported any unusual increase in the number of sea turtle strandings on beaches adjacent to the restricted area, and no incidental captures or mortalities of turtles have been reported by shrimpers in the restricted area. In addition, the State of North Carolina has conducted intensive monitoring of the tow-time requirements and found compliance to be high. Only one vessel was found to have exceeded, unintentionally, the tow-time limit.

The Center for Marine Conservation (CMC) commented that it endorsed the concept of allowing restricted tow times in lieu of TEDs when TED use is impracticable, but expressed grave concerns with the implementation of the rule and the potential for its abuse by shrimpers. CMC recommended that the 55-minute tow-time limit be shortened, noting that if shrimpers are limited to tow times of 20 to 30 minutes due to heavy algae causing clogging of the nets, then a 55-minute tow time is excessive. CMC noted that recent studies have shown that even 20 to 30 minutes of forced submergence causes significant stress to sea turtles. Additionally, CMC expressed concern for nesting sea turtles and hatchlings because the restricted area is adjacent to nesting beaches.

Response: NMFS agrees that the granting of an exemption from required TED use can be problematical as restricted tow time requirements are less easily enforceable. However, NMFS and the State of North Carolina are monitoring compliance in the restricted area, and NMFS will terminate the exemption program if it determines that there is non-compliance, or turtle mortalities are in excess of those allowed as a result of the ESA section 7 consultation for this action. NMFS recognizes that trawling in the restricted area may be limited to 20 to 30 minutes when algae concentrations are high. However, when algae is less concentrated, but still problematical for TED use, a 55-minutes tow time limitation will allow longer fishing time of approximately 40 minutes. With respect to possible incidental capture of turtles attempting to nest on beaches adjacent to the restricted area, NMFS and the State of North Carolina will continue to monitor incidental take of

turtles and nesting activity, and may impose additional protective measures, including termination of the TED exemption program during periods of nesting.

Sea Turtle Conservation Measures

The Secretary issues this interim final rule to maintain a restricted area in which the Assistant Administrator for Fisheries, NOAA (Assistant Administrator), or his designee, may authorize the use of restricted tow times of up to 55 minutes (measured from the time trawl doors enter the water, until they are retrieved from the water) by shrimp trawlers, when the Assistant Administrator finds that the concentration of brown algae makes trawling with TEDs impracticable. Shrimp trawlers are required to register with the Assistant Administrator in order to use restricted tow times in lieu of TEDs. Owners and operators of shrimp trawlers are advised that the State of North Carolina issues authorizations to fish in the North Carolina restricted area.

This interim final rule utilizes the framework established in associated rulemaking which allows the Assistant Administrator to modify the required conservation measures through notice in the **Federal Register**, if necessary, to ensure adequate protection of endangered and threatened sea turtles. Under this procedure, the Assistant Administrator will impose any necessary additional or more stringent measures, including requiring more restrictive tow times, synchronized tow times, or termination of the TED-use exemption program, if the Assistant Administrator determines that the concentration of algae no longer makes trawling with TEDs impracticable, that there is insufficient compliance with the required conservation measures, that compliance cannot be monitored effectively, or if monitoring to assess turtle mortality indicates that the incidental take level for the program is approaching, or has exceeded, the incidental take level established by the biological opinion for this rule issued as a result of consultation under section 7 of the ESA. That level is one lethal take of a Kemp's ridley, green, hawksbill, or leatherback turtle; or two lethal takes of loggerhead turtles. Finally, the Assistant Administrator may impose any necessary additional conservation measures, including termination of the exemption program, if significant or unanticipated levels of lethal or non-lethal takings or strandings of sea turtles associated with fishing activities in the North Carolina restricted area occur.

This interim final rule requires a shrimp trawler participating in this program to carry a NMFS–approved observer, if requested by the Assistant Administrator, and to monitor compliance with required conservation measures, including restricted tow times, and resuscitation of captured turtles in accordance with 50 CFR 227.72(e)(1)(i).

Finally, authorization for the use of 55-minute tow times in the restricted area may be rescinded by publication in the **Federal Register** if the Assistant Administrator determines that trawling with TEDs is feasible during the effective dates of this rule.

The Assistant Administrator will monitor algal concentrations regularly in the restricted area through limited observer coverage and the testing of TEDs to evaluate the need for continued TED exemption for this local fishery.

The provisions of this interim final rule do not preclude the State of North Carolina from implementing more stringent protective measures for sea turtles in the North Carolina restricted area.

Classification

The Secretary has determined that this interim final rule is necessary to respond to an emergency situation to allow more efficient fishing for shrimp, while providing adequate protection for listed sea turtles, and is consistent with the ESA and other applicable law. This interim final rule is not a "major rule" requiring a regulatory impact analysis under E.O. 12291. The basic regulations that this rule amends were determined not to be major.

Because neither section 553 of the Administrative Procedure Act (APA) nor any other law requires that general notice of proposed rulemaking be published for this action, under section 603(b) of the Regulatory Flexibility Act, an initial Regulatory Flexibility Analysis is not required.

The Assistant Administrator prepared an environmental assessment (EA) for the original interim final rule (57 FR 33452, July 29, 1992) that concluded that there will be no significant impact on the human environment.

In the final rule that implemented the sea turtle conservation regulations (52 FR 24244, June 29, 1987), the NMFS concluded that, to the maximum extent practicable, the regulations were consistent with the coastal zone management programs of each of the southeastern states that has an approved program under the Coastal Zone Management Act. Since this interim final rule, does not directly affect the coastal zone in a manner not already fully evaluated in the initial consistency determination, a new consistency determination is not required. Neither this interim final rule nor the ESA preclude a state from adopting more stringent sea turtle protection measures.

Paragraph 227.72(e)(3)(iii)(A)(2) of this interim final rule contains a new collection-of-information requirement subject to the Paperwork Reduction Act (PRA), namely, requests for registration to trawl using restricted tow times in lieu of TEDs in the North Carolina restricted area. This collection has been approved by the Office of Management and Budget (OMB) under OMB control number 0658–0267.

This interim final rule does not contain policies with federalism implications sufficient to warrant preparation of a federalism assessment under E.O. 12612.

The Secretary, pursuant to section 553(b)(B) of the APA, finds for good cause that the reasons justifying promulgation of this rule on an emergency basis also make it impracticable and contrary to the public interest to provide notice and opportunity for comment on this rule. Failure to implement interim measures immediately would result in fishermen not being able to catch shrimp as efficiently as possible in the North Carolina restricted area, while still protecting endangered and threatened sea turtles. Because this rule relieves a restriction (the requirement to use TEDs), under section 553(d)(1) of the APA, this rule is being made immediately effective.

List of Subjects

50 CFR Part 217

Endangered and threatened species, Exports, Fish, Imports, Marine Mammals, Transportation.

50 CFR Part 227

Endangered and threatened species, Exports, Imports, Marine Mammals, Transportation.

Dated: August 31, 1992.

William W. Fox, Jr.,

Assistant Administrator for Fisheries.

For the reasons set forth in the preamble, 50 CFR parts 217 and 227 are amended as follows:

PART 217—GENERAL PROVISIONS

1. The authority citation for part 217 continues to read as follows:

Authority: 16 U.S.C. 1521–1543; and 16 U.S.C. 742a *et seq.*, unless otherwise noted.

2. In § 217.12, a new definition for "North Carolina restricted area" is temporarily added effective from September 1, 1992 through September 30, 1992, in alphabetical order, to read as follows:

§ 217.12 Definitions.

* * * * *

North Carolina restricted area means that portion of the offshore waters between Rich Inlet, North Carolina (34°17.6'N. latitude) and Brown's Inlet, North Carolina (34°35.7'N. latitude), the inner boundary of which is the 72 COLREGS demarcation line, as described in the definition for "inshore" in this section, and the seaward boundary of which is 1 nautical mile east of that line.

* * * * *

PART 227—THREATENED FISH AND WILDLIFE

3. The authority citation for part 227 continues to read as follows:

Authority: 16 U.S.C. 1531 *et seq.*

4. In § 227.72, paragraph (e)(3)(iii)(A) is temporarily added from September 1, 1992 through September 30, 1992, to read as follows:

§ 227.72 Exceptions to prohibitions.

* * * * *

(e) * * *

(3) * * *

(iii) * * *

(A) *North Carolina restricted area.—(1) Determination.* The Assistant Administrator has determined that special environmental conditions continue to exist in the North Carolina restricted area, and therefore, compliance with tow-time restrictions, as an alternative to the TED requirement, is appropriate. Notwithstanding paragraphs (e)(2)(i) and (e)(2)(ii) of this section, through September 30, 1992, a shrimp trawler may operate in the North Carolina restricted area if that shrimp trawler is in compliance with paragraphs (e)(3)(iii)(A)*(2)* through *(6)* of this section.

(2) Registration. The owner or operator of a shrimp trawler (regardless of length) who wishes to operate his or her shrimp trawler in the North Carolina restricted area either must comply with the TED requirement of paragraph (e)(2)(i) of this section, or must register with the Regional Director, NMFS, Southeast Region at least 24 hours before the first fishing trip after September 1, 1992 by telephoning at (813) 893–3163 and providing the following information:

(i) The name and official number of the vessel;

(ii) The time and date of the telephone registration;

(iii) The number of the State permit authorizing fishing in the restricted area;

(iv) A statement that the owner or operator intends to trawl in the North Carolina restricted area using the limited tow times option; and

(v) The dates trawling operations in the North Carolina restricted area are expected to be conducted.

(3) Observers. If required by the Assistant Administrator, the owner and operator of a shrimp trawler trawling in the North Carolina restricted area must carry a NMFS-approved observer.

(4) Tow times. As an alternative to compliance with the TED requirement of paragraph (e)(2)(i) of this section, a shrimp trawler trawling in the North Carolina restricted area must limit each tow time to 55 minutes, measured from the time trawl doors enter the water until trawl doors are removed from the water.

(5) Additional restrictions. The Assistant Administrator may impose additional restrictions on shrimp trawlers trawling in the North Carolina restricted area by publishing a notice in the Federal Register if he/she determines that this is necessary to ensure the protection of endangered and threatened sea turtles, or that environmental conditions no longer make TED use impracticable. The Assistant Administrator may require more restrictive tow times, synchronized tow times, or other suitable measures, if the Assistant Administrator determines that one or more sea turtle mortalities have occurred under this program, or there have been significant and unanticipated levels of takings or strandings of sea turtles associated with fishing activities in this area.

(6) Termination. The Assistant Administrator may terminate the exemption from the TED requirement provided for the North Carolina restricted area if the Assistant Administrator determines that two or more sea turtle mortalities have occurred under this program, that there have been significant or unanticipated levels of takings or strandings of sea turtles associated with fishing activities in the North Carolina restricted area, that shrimpers are not complying with required conservation measures, that conditions are such that it is not practicable to monitor compliance, or that algal concentrations no longer make the use of TEDs impracticable.

* * * * *

[FR Doc. 92–21330 Filed 9–1–92; 4:57 pm]

BILLING CODE 3510-22-M

---

50 CFR Parts 217 and 227

[Docket No. 910779–2213]

RIN 0648–AE12

Threatened Fish and Wildlife; Threatened Marine Reptiles; Revisions to Enhance and Facilitate Compliance With Sea Turtle Conservation Requirements Applicable to Shrimp Trawlers; Restrictions Applicable to Shrimp Trawlers and Other Fisheries

AGENCY: Department of Commerce.

ACTION: Interim final rule with request for comments.

SUMMARY: Under the Endangered Species Act (ESA) and its implementing regulations, it is unlawful to take sea turtles. The incidental taking of turtles during fishing is exempted from the prohibitions in certain specified circumstances. Shrimp trawlers in the southeastern Atlantic and the Gulf of Mexico, including the Southwest Florida Area, are exempt if they employ specified measures (sea turtle conservation measures) to reduce the mortality of sea turtles incidentally taken.

The Secretary of Commerce (Secretary) issues this interim final rule to amend the sea turtle protection regulations applicable to shrimp trawlers in the southeastern Atlantic and Gulf of Mexico. Major provisions of this interim rule follow. Shrimp trawlers in Federal or state waters inshore or offshore of the southeastern Atlantic coastal states (Atlantic Area) are required to comply with the Federal sea turtle conservation requirements year round, rather than from May 1 through August 31 of each year as presently required (52 FR 24244, June 29, 1987). Beginning November 1, 1992, in all areas where limited tow times can be used as an alternative to the use of turtle excluder devises (TEDs), tows normally must be limited to no more than 75 minutes. The exemption for the rock shrimp fisheries in the Atlantic Area is eliminated and exemptions for vertical-barred beam an roller trawls, wing nets, skimmer trawls, pusher-head trawls, and bait shrimpers are added. Procedures are established for restricting shrimp trawling or other types of fishing activities when found necessary to protect sea turtles or when

special environmental conditions make trawling with TED-equipped nets impracticable. Definitions are added and prohibitions are revised to clarify the sea turtle conservation measures and improve the enforcement measures. The sale of non-approved TEDs is prohibited. Generic standards applicable to all hard TEDs are specified. Unnecessary elements concerning the construction requirements for the Morrison "soft" TED are removed. Allowable modifications to approved TEDs are clarified and all other modifications are prohibited.

DATES: This rule is effective on September 1, 1992. Comments on this interim rule must be submitted by October 16, 1992.

ADDRESSES: Requests for a copy of the biological opinion, Environmental Assessment and Supplemental Regulatory Impact Review/Regulatory Impact Analysis and comments on this interim rule should be addressed to Dr. Nancy Foster, Director, Office of Protected Resources, NMFS, 1335 East-West Highway, Silver Spring, MD 20910.

FOR FURTHER INFORMATION CONTACT: Phil Williams, NMFS National Sea Turtle Coordinator, 301–713–2322, or Charles A. Oravetz, Chief, Protected Species Program, NMFS Southeast Regional Office, 813–893–3366.

SUPPLEMENTARY INFORMATION:

Background

All sea turtles that occur in U.S. waters are listed as either endangered or threatened under the ESA. Kemp's ridley, leatherback, and hawksbill turtles are listed as endangered. Loggerhead and green turtles are listed as threatened, except for breeding populations of green turtles in Florida and on the Pacific coast of Mexico, which are listed as endangered. The incidental take and mortality of these species by shrimp trawlers has been documented in the Gulf of Mexico and along the Atlantic seaboard.

The Secretary issued regulations amending 50 CFR parts 217, 222, and 227 to protect endangered and threatened sea turtles on June 29, 1987 (52 FR 24244). Those regulations require shrimp trawlers 25 feet (7.6 m) in length or longer, trawling in offshore waters from North Carolina through Texas, to use a NMFS-approved TED in each net during certain times of the year in specific areas. Shrimp trawlers of all sizes trawling in inshore waters, and shrimp trawlers less than 25 feet (7.6 m) in length trawling in offshore waters, are required to limit their tow times to 90 minutes or use nets equipped with National Marine Fisheries Service (NMFS)-approved TEDs during certain times of the year in specific areas.

The 1987 sea turtle conservation regulations were designed to reduce the mortality of sea turtles incidentally taken during shrimp trawling. NMFS-approved TEDs allow at least 97 percent of the sea turtles captured by a net to escape. Tow-time restrictions limit the amount of time sea turtles are subjected to forced submergence in the nets. The regulations were, in part, in response to data that indicate that, without protective regulations in place, offshore commercial shrimp trawlers kill 11,000 sea turtles in the waters off the south Atlantic and Gulf of Mexico coastal states each year. A recent National Academy of Sciences (NAS) study, "Decline of the Sea Turtles: Causes and Prevention" (NAS Study), found that 11,000 sea turtle deaths each year was a conservative estimate and that total sea turtle mortality could have been underestimated by a factor of four.

During 1990, the sea turtle conservation regulations became effective for the first time in all southeastern U.S. inshore and offshore waters. Interruptions in the implementation of these regulations were due to a series of lawsuits challenging the regulations and Congressional action in 1988. That action interrupted implementation of the sea turtle conservation regulations, except for the Canaveral Area, until May 1, 1989, and May 1, 1990, for offshore and inshore areas, respectively.

Currently, the regulations are in effect in inshore and offshore waters as follows: Gulf Area from March 1 through November 30; Atlantic Area from September 1991 through April 30, 1992 (and from May 1 through August 31, generally, in other years); and the Canaveral Area and the Southwest Florida Area year-round.

In the 1988 amendments to the ESA, Congress directed the Secretary to contract with the NAS for an independent review of the conservation of sea turtles and the causes and significance of their mortality. In particular, the 1988 ESA amendments required an independent NAS determination as to whether more or less stringent measures to reduce the drowning of sea turtles in shrimp nets are necessary and advisable to conserve sea turtles and where such measures should apply.

The NAS Study, released in May 1990, concluded that: (1) Combined annual counts of nests and nesting females indicate that nesting sea turtles continue to experience population declines in most of the United States; (2) natural mortality factors—such as predation, parasitism, diseases, and environmental changes—are largely unquantified, so their respective impacts on sea turtle populations remain unclear; (3) sea turtles can be killed by several human activities, including beach manipulations (because of the effects on eggs and hatchlings), boating (through collisions with turtles), non-shrimp fishing (because of entrapment in fishing nets and other gear), dredging, oil-rig removal, powerplant operation (because of entrainment), discharge of plastics and toxic substances (because of ingestion), and shrimp trawling (because of incidental capture and drowning); (4) shrimp trawling kills more sea turtles than all other human activities combined; (5) shrimp trawling can be compatible with the conservation of sea turtles if adequate controls are placed on trawling activities, especially the mandatory use of TEDs in most places at most times of the year; and (6) the increased use of conservation measures on a worldwide basis would help to conserve sea turtles.

Based on the NAS Study, the recommendations of an *ad hoc* reviewing committee of NOAA/NMFS scientists and managers and the information summarized below, the Secretary has concluded that the measures shrimp trawlers are currently required to employ to reduce the mortality of sea turtles incidentally taken in the shrimp trawl fishery are inadequate to conserve sea turtles and, accordingly, must be revised.

Moreover, there are problems with compliance with, and enforcement of, the existing regulations. For example, during 1990, enforcement officers documented over 230 alleged violations of the regulations, approximately 50 percent of which involved alterations to installed TEDs. The most commonly found alterations were escape openings sewn shut, webbing flaps sewn tightly over escape openings, and elastic cords or twine installed through webbing flaps. Some of the reasons advanced by fishermen for not complying with the requirements include confusion over what constitutes an approved TED and relying on the manufacturer to provide an approved TED.

Proposed Regulations

The Secretary determined that there was a need to amend the sea turtle conservation regulations to conserve and prevent further declines in the populations of listed sea turtles and to enhance and facilitate compliance and enforcement. The Secretary published proposed regulations on April 30, 1992

(57 FR 18446) and held public hearings on the regulations in each State where shrimp trawlers would be affected.

Comments and Responses on the Proposed Regulations

The Secretary received over 15,000 comments on the proposed amendments to the sea turtle conservation measures, both from participants in the public hearings and by letter. These comments ranged from complete support of the proposed amendments to total opposition to the use of TEDs and to regulations in any form. The Secretary fully considered all the comments. Comments that are germane to the conservation measures addressed in this interim rule are grouped into general categories and discussed below. Other comments will be addressed when the remaining conservation measures (e.g., expanded TED requirements) in the proposed rule are implemented through additional regulations.

Many of the comments received were similar to those addressed in the 1987 final rule. Those common to both the 1987 regulations and the proposed amendments included: (1) Support for mandatory use of TEDs; (2) opposition to the use of TEDs/will not use a TED; (3) TEDs are dangerous; (4) TEDs will cause insurance premiums to increase; (5) TEDs reduce shrimp production and increase costs; (6) TEDs do not exclude turtles; (7) shrimpers do not catch/kill any/many sea turtles; (8) available data do not support the proposed amendments; (9) the Secretary should delay implementation of amendments until more research has been done on shrimp retention when using TEDs; and (10) the Secretary should address all sources of impacts to sea turtles, not just shrimp trawling. Because the Secretary has already responded to these comments in the 1987 final rule, many of the general comments will not be re-addressed at this time. The majority of the other comments received were specific to provisions of the proposed amendments.

By far the most controversial provision was the proposal to expand significantly the requirements for TED use. The proposed rule would have required most shrimp trawlers to use TEDs in both inshore and offshore waters throughout the year and would have eliminated the tow-time option, except in limited situations. Because expanded TED requirements for the Gulf of Mexico and inshore waters are not a part of this interim rule, most of these comments will not be addressed here. However, they will be addressed when the Secretary promulgates regulations providing for expanded sea turtle conservation measures in the shrimp fishery.

Comment: There are no sea turtles in inshore waters and thus, inshore fishermen seldom, if ever, catch turtles. Many of the commenters stated that they had never seen or caught sea turtles in inshore waters despite years of fishing. Other commenters affirmed that they occasionally caught turtles in inshore waters, but argued that the turtles were always released alive.

Response: The preponderance of evidence suggests that sea turtles occur in both inshore and offshore waters off the U.S. coast. Although sea turtle distribution, abundance, species composition and seasonality in inshore waters have not been quantified in many areas affected by this rule, the best available data and information indicate that sea turtles are seasonal residents in most inshore areas. When sea turtles are present in inshore waters, they are vulnerable to capture and mortality in shrimp trawls.

Many of the commenters suggested that NMFS should collect more data on sea turtles inshore and, that without additional data, additional regulations should not be implemented. In contrast, another commenter provided results of a limited survey of Carteret County, North Carolina, shrimp boat captains. For this sample of 20 Core Sound shrimpers, an average of 8.5 sea turtles were caught per vessel per year. While more data would be useful, the best available information indicates that additional protections for sea turtles are necessary to comply with the mandates of the ESA.

Comment: In general, the commercial shrimping industry claimed that tow times are a viable alternative to TEDs and this option should remain in effect in inshore waters. Fishermen commented that 90-minute tow times have proven successful in protecting sea turtles and that this option is the only thing that will work in inshore waters. Comments from other sectors, which constitute the majority of comments on this issue, favor elimination of restricted tow times as an alternative.

Response: The Secretary has not yet reached a final decision about the effectiveness of reduced tow times in the conservation of sea turtles. However, the NAS Study determined that 90-minute tow times are inadequate to provide sea turtle protection comparable to that provided by TED use and recommended 40- and 60-minute tows (actual bottom fishing time) for warm- and cold-water months, respectively. Sea turtle scientists have information indicating that tow-time restrictions do not eliminate stress and trauma to turtles associated with their capture and forced submergence. Physiologists suggest that full recovery from such a capture could require days or even weeks, and that multiple captures of the same turtle could result in death, even when short tows are used. Reduced tow times also may result in significant adverse economic impacts to shrimp fishermen. Finally, enforcement of tow-time limitations is problematic. In the 3 years that limited tow times have been required in waters off the U.S. coast, an insignificant number of cases involving a violation of these limitations have been prosecuted, despite the fact that many commenters readily admit to tows in excess of 90 minutes. After receipt and review of the additional comments solicited with this interim rule, the Secretary will reach a final decision on whether reduced tow times provide conservation benefits that are similar to those of TEDs. However, the Secretary is reducing the length of the tow-time alternative from 90 minutes to 75 minutes, effective November 1, 1992, in light of the conclusions of the NAS Study.

Comment: The Federal Government is targeting the U.S. shrimp industry and ignoring other sources of domestic and foreign sea turtle mortality. Many commenters thought that expanding TED regulations would put an increased financial burden on shrimp fishermen while other human related impacts to sea turtles were being largely overlooked.

Response: The adverse effects of shrimp trawling on sea turtle populations have been studied extensively and are well known. The NAS Study concluded that shrimp trawling kills more sea turtles at sea than all other human activities combined. Because shrimp trawling is the number one source of sea turtle mortality, the Secretary has indeed made reduction of turtle mortality by this sector the top priority for sea turtle conservation. Nonetheless, NMFS has analyzed the impacts of other activities that may adversely affect sea turtles. Under section 7 of the ESA, NMFS has consulted with the U.S. Army Corps of Engineers regarding impacts of channel dredging projects on sea turtles. This consultation resulted in a ban on use of hopper dredges from Florida to North Carolina from April through November each year. Since this requirement went into effect last December, only two loggerhead mortalities have been documented for all dredging within the area of concern. NMFS has also consulted with Minerals Management

Service on potential adverse effects of explosive removal of obsolete oil and gas platforms in the Gulf of Mexico. As a result of this section 7 consultation, aerial surveys, diver surveys, 48-hour surface observations and other measures have been required on all removals since 1987. Since these measures were implemented, one turtle injury and no mortalities have been reported from approximately 300 platform removals.

TEDs are expected to be used on most shrimp trawlers of foreign nations in the Gulf of Mexico and wider Caribbean region, and on the Pacific coast of several Latin American nations. This is the result of Public Law 101–162, section 609. This law bans importation into the United States of trawl-caught shrimp from a foreign nation, unless that nation can demonstrate that it has both a sea turtle protection program and a rate of incidental capture of sea turtles by its shrimp trawl fleet that are comparable to those of the United States. The implementation of these measures by foreign nations is expected to protect sea turtles throughout their ranges and not just in waters off the U.S. coasts.

NMFS also is evaluating non-shrimp fisheries to determine the impact of these fisheries on sea turtles. The Secretary has published an advance notice of proposed rulemaking concerning these fisheries (57 FR 30709, July 10, 1992). NMFS has conducted a variety of section 7 consultations concerning specific fisheries to determine if these fisheries are likely to adversely affect or jeopardize the continued existence of sea turtles or other species listed under the ESA. The Secretary has taken action to regulate the summer flounder fishery so that sea turtles are protected (56 FR 63685, December 5, 1991), and additional measures are under consideration (57 FR 24577, June 10, 1992). The Secretary has requested information on the impacts of other non-shrimp trawl fisheries, and has recommended that observer programs be established to investigate gill net fisheries, long line fisheries and other trawl fisheries. Finally, this interim rule provides a mechanism so that other fisheries may be restricted when such action is necessary in order to protect sea turtles.

Comment: Allowing shrimpers to substitute tow-time restrictions for TED requirements under special environmental conditions should not be allowed. Many of the commenters thought that this exemption could easily be abused, and recommended that the Secretary further clarify the conditions under which such an exemption would be granted. Most commenters argued that tow times are difficult to enforce and that such an exemption would allow fishermen to circumvent the TED regulations. In general, the commercial shrimp industry favored this provision.

Response: The Secretary believes that there may be certain areas and times when adverse environmental conditions (algae, seagrasses, etc.) make it impractical to trawl with TEDs. For example, the Secretary recently allowed a small group of fishermen to comply with restricted tow times in lieu of TEDs in a very small offshore area off North Carolina where brown algae concentrate until August 31, 1992 (57 FR 33452, July 29, 1992). The Secretary views the North Carolina algae situation as unique, because fishermen want to catch the algae and associated shrimp. TEDs that exclude algae also exclude shrimp. The Secretary does not expect to encounter similar situations elsewhere, because most fishermen do not want to catch seagrasses, algae, or other debris. This is the only location where a problem has ever been identified and confirmed by NMFS personnel and where TED-use clearly has a detrimental economic impact on fishing. In a separate rule, the Secretary is allowing the use of restricted tow times in lieu of TEDs in this small area to continue for an additional 30 days. The Secretary will consider further extending this exemption if concentrations of algae continue.

The Secretary does not intend to allow compliance with restricted tow times in offshore waters as an alternative to TEDs except where problems have been well documented and a viable alternative that ensures the protection of sea turtles exists.

Comment: Seasonal area closures are not necessary, and tow time restrictions offer a viable alternative. Many fishermen expressed concerns that this provision would allow arbitrary and capricious closures of fishing grounds based on minimal information. Other commenters strongly supported this provision as necessary to allow timely response to unusual stranding events.

Response: The principal objective of this provision is to allow the Secretary to restrict shrimp trawling in discrete areas for short time periods when unusually high concentrations of sea turtles are present. It was primarily directed at recurrent leatherback stranding events in the spring of the year off Georgia and South Carolina. None of the currently approved TEDs are designed to exclude the large leatherback turtle. During most times of the year, leatherback captures by shrimp trawlers are not a problem, because the leatherback spends most of its time in deeper offshore waters. At certain times of the year, however, leatherbacks occur on shrimping grounds while feeding on large concentrations of jellyfish. Area closures when leatherbacks are abundant in nearshore waters may be the only alternative to prevent drowning in trawls. The Secretary expects to use area closures only as a last resort if other alternatives (such as limited tow times or increasing the size of TED escape openings during periods when leatherbacks are present) fail to prevent sea turtle mortalities. This provision simply enhances the Secretary's ability to react in a timely manner to short-term events.

Comment: A number of commenters objected to the Secretary's inclusion of rock shrimpers under the proposed amendments. They argued that bottom conditions, water depth, gear and limited tow times made it unlikely that a sea turtle would be encountered, and if captured, killed.

Response: The best available data indicate that sea turtles are likely to occur at depths and in bottom conditions similar to those found in the rock shrimp fishery, and that sea turtle capture and mortality is possible in this fishery. The Secretary also believes that gear and tow times in the rock shrimp fishery are comparable to those used in the nearshore brown shrimp fishery. Furthermore, the Secretary believes that TEDs will function properly in nets used in this fishery, and thus, requiring TEDs as a precautionary measure is warranted.

Other Comments: Several commenters provided technical suggestions and recommendations regarding gear descriptions.

Response: The Secretary considered these suggestions and incorporated recommended changes where appropriate.

Interim Regulations

As a result of comments and recommendations received, the interim amendments differ from the proposed amendments in several areas. Specific changes from the proposed amendments are summarized below.

1. The proposed amendments would have allowed compliance with tow-time restrictions of 40 minutes in warm-water months (April 1 through October 31) and 60 minutes in cold-water months (November 1 through March 31) in lieu of the use of TEDs in certain limited circumstances. The NAS Study concluded that if compliance with tow-

times limits were to be allowed as an alternative to the use of TEDs, the limits should not exceed 40 minutes (defined as actual bottom fishing time) in warm-water months and 60 minutes in cold-water months.

The tow-time limits in the proposed amendments did not take into consideration the fact that, in addition to bottom fishing time, a certain amount of time is required to set and retrieve nets. The Secretary has determined that 15 minutes should be added to the proposed cold-water months' tow-time limit, resulting in a tow-time limit of no more than 75 minutes starting November 1, 1992. For gear equipped with trawl doors, this time is measured from the time trawl doors enter the water until they are removed from the water. For gear without doors, tow times are measured from the time the codend is deployed until it is retrieved. The Secretary will evaluate the need for shorter tow times in warm-water months in the continuation of this rulemaking and, if necessary, impose them by April 1, 1993.

2. The proposed amendments generally would have eliminated compliance with restricted tow times as an alternative to the use of TEDs. This interim rule reduces the length of the tow times for cold-water months, but does not eliminate the use of restricted tow times as an alternative to TEDs. However, the Secretary solicits additional comments on the proposed amendment to generally eliminate restricted tow times. The NAS Study and the biological opinion prepared in conjunction with this rule indicate that the use of TEDs should be required by most shrimp trawlers year round. Consistent with the Biological Opinion, expanded required TED use can be phased in over time, thereby minimizing disruptions to the shrimp fishery, while providing adequate protection for sea turtles.

This interim rule takes effect immediately in order to protect sea turtles in the Atlantic Area where protective measures otherwise would expire September 1, 1992. It is essential to take immediate action to avoid a high risk that sea turtles will be injured or killed after September 1.

3. The proposed rule would not have provided an exemption from the TED requirements for boats less than 25 feet (7.6 m) in length. This interim rule continues the existing exemption, and the Secretary solicits additional comments on the proposed amendment to eliminate this exemption. However, effective November 1, 1992, vessels less than 25 feet (7.6 m) in length and all vessels fishing in inshore waters that are not using NMFS-approved TEDs must limit tow times to no more than 75 minutes (until November 1, 1992, 90-minute tow-time limits remain in effect). In addition, neither tow-time restrictions nor TEDs are required in the Gulf Area between December 1, and February 28, regardless of a vessel's length.

The Secretary recognizes that enforcement of tow-time restrictions is problematic. If there is widespread noncompliance with the tow-time restrictions or with the requirement to use TEDs, the Secretary will restrict fishing or impose additional requirements so that sea turtles are adequately protected. This interim rule establishes new procedures to facilitate a quick response under such circumstances.

4. The proposed amendments contained specific exemptions from the requirements to use TEDs for various gear and shrimping operations, such as vertical-barred beam and roller trawls, test nets, and bait shrimpers. Specific exemptions were not included for wing nets and skimmer trawls, since they were implicitly exempt by proposed revisions to § 227.72(e)(2)(i). This interim rule maintains the specific exemption for vertical-barred beam and roller trawls, test nets and bait shrimpers and adds specific exemptions for wing nets, skimmer trawls and pusher-head trawls.

The proposed amendments did not address pusher-head trawls. Pusher-head trawls are sometimes referred to locally as "chopsticks." During public hearings, NMFS learned that about 20 vessels employ this type of gear in Mississippi water. Pusher-head trawls are a variation of skimmer trawls, and because the tailbag usually is retrieved and dumped frequently, NMFS believes that they are unlikely to cause mortality to sea turtles.

Pusher-head trawls use long telephone poles (60+feet) (18.3+m) that are attached to the bow of a vessel in a "V" configuration. A shrimp trawl is attached to the bottom of the poles. The poles and trawl are then pushed through the water. The bag or codend of the trawl runs just under the front portion of the vessel.

Like wing nets and skimmer trawls, pusher-head trawls are fished continuously and the bag is dumped frequently. The tailbags of pusher-head trawls are emptied every 15–20 minutes. Since there are no barriers or other net modifications in pusher-head trawls that would prevent sea turtle captures, some level of turtle take is expected. However, it seems unlikely that any captured turtles would be killed because of the frequent dumping of the bag.

However, if the tail bags of pusher-head trawls, wing nets, or skimmer trawls are left in the water for long periods, sea turtle mortality is a possibility. To address this concern, this interim rule includes a provision that if shrimp vessels using wing nets, skimmer trawls, and pusher-head trawls do not use TEDs they must retrieve and dump the tailbag at least every 75 minutes. This requirement is expected to enhance turtle protection.

The proposed exemption for bait shrimpers remains in this interim rule, but has been revised to apply to shrimp trawlers fishing for bait that retain live shrimp in a container with a circulating seawater system; that do not possess more than 32 pounds (14.5 kg) of dead shrimp; and that have on board an original, valid state bait-shrimp license, where such a license is required. This revision is necessary to avoid potential problems resulting from discrepancies in state requirements for bait shrimping licenses.

The change from allowing 5 pounds (2.3 kg) of dead shrimp aboard in the proposed rule, to 32 pounds (14.5 kg) of dead shrimp aboard in this interim rule, was based on a survey of the various state regulations. Some states have stringent requirements for bait shrimping licenses while other states have few, if any, requirements. Several state regulations allowed no more than a bucket of dead shrimp aboard. A bucket of shrimp translates to roughly 32 pounds (14.5 kg), and for purposes of consistency, the Secretary adopts this standard in this interim rule.

In addition, this interim rule requires bait shrimps not using TECs to limit tow times to no more than 75 minutes for the same reasons it places this requirement on pusher-head trawls, wing nets, and skimmer trawls.

5. This interim rule differs from the proposed rule as a result of several technical changes to gear requirements. In the description of the Morrison TED, Georgia Sea Grant pointed out that some fishermen were installing the leading edge of the TED on a bias. This method of installation would cause a pouching in the TED that might entangle sea turtles. The description of the Morrison TED in this interim rule has been revised to prevent this method of installation. The mesh size measurement for the Morrison TED is also specified in the interim rule to be 8 inches (20.3 cm) measured center knot to center knot. On review of the net specifications when the Morrison TED was approved, NMFS determined that the mesh had been measured in this matter. The method of measurement was not specified in the

regulatory amendment that approved the Morrison TED or in the proposed rule.

The dimensions of the accelerator funnel in the proposed rule were set as 36 inches (97.4 cm). To be more consistent with the escape opening TEDs, the funnel measurement has been modified to 39 inches (99.1 cm). A provision that the path of the funnel opening match that of the turtle escape opening was also added to this interim rule to ensure that the openings would be on the same plane since TEDs can be installed in an upward or downward configuration. Finally, a clarifying statement was added to allow attachment of no more than ⅓ of the trailing edge of the funnel to the TED. Attachment of the top portion of the funnel to the TED reduces shrimp loss and is recommended by NMFS gear specialists. This provision in no way hinders turtle release.

This interim rule differs from the proposed rule by eliminating specific requirements for using depth-stretched polyethylene or polypropylene for optional funnels and flaps because manufacturers complained that such materials were expensive and difficult to obtain. NMFS recommends, but does not require, the use of such materials because they appear to minimize shrimp loss.

In the proposed rule, floats would have been allowed to be added to only the outer portion of the TED. During the hearings, fishermen noted that floats on the outside of the trawl might be torn off during net retrieval, and that installation of floats inside the trawl on the rear portion of the TED would in no way prevent turtle release. This interim rule therefore allows installation of floats inside the trawl net, but only to the rear surface of the TED, and not to any flap.

6. This interim rule also adds or changes certain provisions of the proposed rule to correct, clarify, or make minor adjustments to the rule. For example, various definitions were added or revised in this interim rule, including the following: "Bait shrimper", "footrope", "footrope length", "headrope", "headrope length", "shrimp", "stretched mesh size", and "test net or try net". These new or revised definitions are designed to clarify and explain gear terms and to enhance enforceability of the regulations.

The definition of "shrimp" is expanded to make it clear that the interim rule covers all species of marine shrimp that occur in the regulated areas (although an exemption is provided to trawlers fishing for royal red shrimp). The definition of "test net or try net" (which the interim rule exempts from having to use a TED) refers to nets that are pulled for brief periods of time, either prior to or during fishing operations with one or more primary nets in order to test for shrimp concentrations, or to determine fishing conditions. Tows with these test nets are normally limited to no more than 15 or 20 minutes.

Finally, this interim rule provides additional explanation concerning the exemption that is provided for shrimp trawlers without power or mechanical advantage trawl retrieval systems. Under both the proposed and interim rule, these trawlers may limit tow times instead of using TEDs. This interim rule indicates that a trawl retrieval system includes any device that is used to haul any part of the net on board the trawler. Thus, a portable device, such as a block-and-tackle system or a "come along," is considered part of the trawl retrieval system. Such a device that provides a mechanical advantage would make the trawler ineligible for the exemption.

This interim rule differs from the proposed rule in that it adds a definition for "Southwest Florida Area" to account for the fact that there are differing requirements in the Gulf and Southwest Florida Areas under this interim rule.

Classification

The Secretary of Commerce has determined that this rule is consistent with the ESA and other applicable law. NMFS conducted a consultation under section 7 of the ESA for the 1987 sea turtle conservation regulations (52 FR 24244, June 29, 1987). A biological opinion was prepared analyzing those regulations. Additional consultation has been conducted to analyze the effects of the shrimp trawl fishery in the southeastern United States on sea turtles and other species listed under the ESA. The biological opinion prepared for this consultation concludes that operation of the shrimp trawl fishery, upon implementation of specified measures pursuant to a time table not inconsistent with this interim rule and an extension of the public comment period in the proposed rule, is not likely to jeopardize the continued existence of sea turtles or other listed species. This interim rule is consistent, in general, with the terms and conditions of the incidental take statement that is included in the biological opinion, although to be consistent with that opinion additional conservation measures will be necessary in the future.

A regulatory impact review/regulatory flexibility analysis (RIR/RFA) was prepared for the 1987 sea turtle conservation regulations. A combination Environmental Assessment (EA) and supplemental RIR was prepared for the proposed amendments that were not already analyzed in the original analysis. An EA/RIR was also prepared on August 19, 1992. The Supplemental RIR indicates that this interim rule would not be considered a "major rule" for which a regulatory impact analysis is required under E.O. 12291.

An environmental impact statement (EIS) was prepared for the listing of three species of sea turtles, the green, loggerhead, and olive ridley, and this EIS addressed the development of gear and procedures to reduce the incidental take and mortality of sea turtles in shrimp trawls. An EA that described a voluntary program to encourage the use of TEDs was prepared in 1983. A supplemental EIS covering the mandatory TED and tow-time requirements was prepared in 1987. A combination EA and supplemental RIR was prepared on August 19, 1992, to analyze provisions of this interim rule that were not already analyzed in the original EA/RIR. This EA concludes that the preferred alternative would not result in an adverse effect on the human environment.

The Secretary has determined that this rule will be implemented in a manner that is consistent to the maximum extent practicable with the approved coastal zone management programs of Alabama, Florida, Louisiana, Mississippi, North Carolina, and South Carolina. Georgia and Texas do not participate in the Federal coastal zone management program. These determinations were submitted for review by the responsible state agencies under section 307 of the Coastal Zone Management Act.

Neither this interim rule nor the ESA precludes any state from adopting more stringent sea turtle protection measures. This interim rule does not contain policies with federalism implications sufficient to warrant preparation of a federalism assessment under E.O. 12612.

This interim rule does not contain a collection-of-information requirement subject to the Paperwork Reduction Act.

The Secretary has determined that this interim rule should take effect immediately in order to extend protections for sea turtles in the Atlantic Area after September 1, 1992, and for other reasons. There is a high risk of sea turtle mortality in these parts of the Atlantic area and elsewhere. Additional time is not required in order to comply with the requirements imposed by this interim rule since the substantive

requirements are substantially similar to those now in effect. The Secretary has determined that there is good cause to make this interim rule effective immediately.

List of Subjects

50 CFR Part 217

Endangered and threatened species, Exports, Fish, Imports, Marine mammals, Transportation.

50 CFR Part 227

Endangered and threatened species, Exports, Imports, Marine mammals, Transportation.

Dated: August 31, 1992.

William W. Fox, Jr.,

Assistant Administrator for Fisheries.

For the reasons set forth in the preamble, 50 CFR parts 217 and 227 are amended as follows:

PART 217—GENERAL PROVISIONS

1. The authority citation for part 217 is revised to read as follows:

Authority: 16 U.S.C. 1531–1544; and 16 U.S.C. 742a *et seq.*, unless otherwise noted.

* * * * *

2. In § 217.12, the definition for "Canaveral Area" is removed; the definitions for "Atlantic Area", "Authorized officer", "Gulf Area", "Shrimp", "Shrimp trawler", and "Southwest Florida Area" are revised; and definitions for "Accelerator funnel", "Approved TED", "Bait shrimper", "Fishing, or to fish", "Footrope", "Footrope length", "Hard TED", "Headrope", "Headrope length", "Pusher-head trawl (chopsticks)", "Skimmer trawl", "Soft TED", "Stretched mesh size", "Taut", "TED (turtle excluder device)", "Test net, or try net", and "Wing net (butterfly trawl)" are added in alphabetical order to read as follows:

§ 217.12 Definitions.

Accelerator funnel means a device used to accelerate the flow of water through a shrimp trawl net.

* * * * *

Approved TED means:

(1) A hard TED that complies with the generic design criteria set forth in 50 CFR 227.72(e)(4)(i). (A hard TED may be modified as specifically authorized by 50 CFR 227.72(e)(4)(iii)); or

(2) A soft TED that complies with the provisions of 50 CFR 227.72(e)(4)(ii).

* * * * *

Atlantic Area means all waters of the Atlantic Ocean south of 36°33'00.8" N. latitude (the line of the North Carolina/Virginia border) and adjacent seas, other than waters of the Gulf Area or Southwest Florida Area, and all waters shoreward thereof (including ports).

Authorized officer means:

(1) Any commissioned, warrant, or petty officer of the U.S. Coast Guard;

(2) Any special agent or enforcement officer of the National Marine Fisheries Service;

(3) Any officer designated by the head of a Federal or state agency that has entered into an agreement with the Secretary or the Commandant of the Coast Guard to enforce the provisions of the ESA; or

(4) Any Coast Guard personnel accompanying and acting under the direction of any person described in paragraph (1) of this definition.

Bait shrimper means a shrimp trawler that fishes for and retains its shrimp catch alive for the purpose of selling it for use as bait.

* * * * *

Fishing, or to fish, means:

(1) The catching taking or harvesting of fish or wildlife;

(2) The attempted catching, taking, or harvesting of fish or wildlife;

(3) Any other activity that can reasonably be expected to result in the catching, taking, or harvesting of fish or wildlife; or

(4) Any operations on any waters in support of, or in preparation for, any activity described in paragraphs (1) through (3) of this definition.

Footrope means a weighted rope or cable attached to the lower lip (bottom edge) of the mouth of a trawl net along the forwardmost webbing.

Footrope length means the distance between the points at which the ends of the footrope are attached to the trawl net, measured along the forwardmost webbing.

* * * * *

Gulf Area means all waters of the Gulf of Mexico west of 81° W. longitude (the line at which the Gulf Area meets the Atlantic Area), other than waters of the Southwest Florida Area, and all waters shoreward thereof (including ports).

Hard TED means a rigid deflector grid and associated hardware designed to be installed in a trawl net forward of the codend for the purpose of excluding sea turtles from the net.

Headrope means a rope that is attached to the upper lip (top edge) of the mouth of a trawl net along the forewardmost webbing.

Headrope Length means the distance between the points at which the ends of the headrope are attached to the trawl net, measured along the forewardmost webbing.

* * * * *

Pusher-head trawl (chopsticks) means a trawl that is spread by poles suspended in a "V" configuration from the bow of the trawler.

* * * * *

Shrimp means any species of marine shrimp (Order Crustacea) found in the Atlantic Area, the Gulf Area, or the Southwest Florida Area, including, but not limited to:

(1) Brown shrimp (*Penaeus aztecus*);

(2) White shrimp (*P. setiferus*);

(3) Pink shrimp (*P. duorarum*);

(4) Rock shrimp (*Sicyonia brevirostris*);

(5) Royal red shrimp (*Hymenopenaeus robustus*); and

(6) Seabob shrimp (*Xiphopenaeus kroyeri*).

Shrimp trawler means any vessel that is equipped with one or more trawl nets and that is capable of, or used for, fishing for shrimp, or whose on-board or landed catch of shrimp is more than 1 percent, by weight, of all fish comprising its on-board or landed catch.

Skimmer trawl means a trawl that extends from the outrigger of a vessel with a cable and a lead weight holding the trawl mouth open.

Soft TED means a panel of polypropylene or polyethylene netting designed to be installed in a trawl net forward of the codend for the purpose of excluding sea turtles from the net.

Southwest Florida Area means that portion of the Gulf of Mexico that lies between 23°40' N. latitude and 27° N. latitude and between 81° W. longitude and 84° W. longitude, and all waters shoreward thereof (including ports).

* * * * *

Stretched mesh size means the distance between the centers of the two opposite knots in the same mesh when pulled taut.

* * * * *

Taut means a condition in which there is no slack in the net webbing.

TED (turtle excluder device) means a device designed to be installed in a trawl net forward of the codend for the purpose of excluding sea turtles from the net.

Test net, or try net, means a net pulled for brief periods of time just before, or during, deployment of the primary net(s) in order to test for shrimp concentrations or determine fishing conditions (e.g., presence or absence of bottom debris, jellyfish, bycatch, seagrasses, etc.).

* * * * *

Wing net (butterfly trawl) means a trawl with a rigid frame, rather than trawl door, holding the trawl mouth open.

PART 227—THREATENED FISH AND WILDLIFE

3. The authority citation for part 227 continues to read as follows:

Authority: 16 U.S.C. 1531 *et seq.*

4. Section 227.71 is revised to read as follows:

§ 227.71 Prohibitions.

(a) Except as provided in § 227.72, the prohibitions of section 9 of the ESA (16 U.S.C. 1538) relating to endangered species apply to any species of sea turtle enumerated in § 227.4.

(b) Except as provided in § 227.72, it is unlawful for any person subject to the jurisdiction of the United States to do any of the following:

(1) Own, operate, or be on board a vessel, except if that vessel is in compliance with all applicable provisions of § 227.72(e);

(2) Fish for, catch, take, harvest, or possess, fish or wildlife while on board a vessel, except if that vessel is in compliance with all applicable provisions of § 227.72(e);

(3) Fish for, catch, take, harvest, or possess, fish or wildlife contrary to any notice of tow-time or other restriction specified in, or issued under, § 227.72(e)(3) or (6);

(4) Possess fish or wildlife taken in violation of paragraph (b) of this section;

(5) Fail to follow any of the sea turtle handling and resuscitation requirements specified in § 227.72(e)(1);

(6) Possess a sea turtle in any manner contrary to the handling and resuscitation requirements of § 227.72(e)(1);

(7) Fail to comply immediately, in the manner specified at 50 CFR 620.8 (b)–(d), with instructions and signals specified therein issued by an authorized officer, including instructions and signals to haul back a net for inspection;

(8) Refuse to allow an authorized officer to board a vessel, or to enter an area where fish or wildlife may be found, for the purpose of conducting a boarding, search, inspection, seizure, investigation, or arrest in connection with enforcement of this section;

(9) Destroy, stave, damage, or dispose of in any manner, fish or wildlife, gear, cargo, or any other matter after a communication or signal from an authorized officer, or upon the approach of such an officer or of an enforcement vessel or aircraft, before the officer has an opportunity to inspect same, or in contravention of directions from the officer;

(10) Assault, resist, oppose, impede, intimidate, threaten, obstruct, delay, prevent, or interfere with an authorized officer in the conduct of any boarding, search, inspection, seizure, investigation, or arrest in connection with enforcement of this section;

(11) Interfere with, delay, or prevent by any means, the apprehension of another person, knowing that such person committed an act prohibited by this section;

(12) Resist a lawful arrest for an act prohibited by this section;

(13) Make a false statement, oral or written, to an authorized officer concerning the fishing for, catching, taking, harvesting, landing, purchasing, selling, or transferring fish or wildlife, or concerning any other matter subject to investigation under this section by such officer;

(14) Sell, barter, trade or offer to sell, barter, or trade, a TED that is not an approved TED; or

(15) Attempt to do, solicit another to do, or cause to be done, any of the foregoing.

(c) In connection with any action alleging a violation of this section, any person claiming the benefit of any exemption, exception, or permit under this subpart D has the burden of proving that the exemption, exception, or permit is applicable, was granted, and was valid and in force at the time of the alleged violation. Further, any person claiming that a modification made to a TED that is the subject of such an action complies with the requirements of § 227.72(e)(4)(iii) has the burden of proving such claim.

5. In § 227.72, Figures 1 through 8b of the section are redesignated as Figures 1 through 8b of the part; paragraph (e)(7) is removed; and paragraph (e)(1) introductory text, and paragraph (e)(2), (e)(3), (e)(4), and through (e)(6) are revised and paragraph (e)(5) is added to read as follows:

§ 227.72 Exceptions to prohibitions.

* * * * *

(e) * * *

(1) *General.* The prohibitions against taking in § 227.71(a) do not apply to the incidental take of any member of any species of sea turtle listed in § 227.4 (i.e., a take not directed toward such member) during fishing or scientific research activities to the extent that those involved are in compliance with the requirements of paragraphs (e)(1), (e)(2), (e)(3), and (e)(6) of this section.

* * * * *

(2) *Gear requirements.* (i) *TED requirement.* Except as provided in paragraph (e)(2)(ii) of this section, any shrimp trawler that is in the Atlantic Area, the Gulf Area, or the Southwest Florida Area, must have an approved TED (as defined in § 217.12) installed in each net that is rigged for fishing. A net is rigged for fishing if it is in the water, or if it is shackled, tied, or otherwise connected to any trawl door or board, or to any tow rope, cable, pole or extension, either on board or attached in any manner to the shrimp trawler.

(ii) *Exemptions from the TED requirement.* (A) A shrimp trawler is exempt from the TED requirements of paragraph (e)(2)(i) of this section if it complies with the alternative tow-time restrictions in paragraph (e)(3)(i) of this section and if it:

(*1*) Has on board no power or mechanical-advantage trawl retrieval system (i.e., any device used to haul any part of the net aboard);

(*2*) Is a bait shrimper that retains all live shrimp on board in a container with a circulating seawater system, if it does not possess more than 32 pounds (14.5 kilograms (kg)) of dead shrimp on board, and if it has on board a valid original state bait-shrimp license (if in a state that requires such a license);

(*3*) Has only a pusher-head trawl, skimmer trawl, or wing net rigged for fishing; or

(*4*) Is in an area during a period for which tow-time restrictions apply under paragraphs (e)(3)(ii), (iii), or (iv) of this section, and it complies with all applicable provisions imposed under those paragraphs.

(B) The following fishing gear or activities are exempted from the TED requirements of paragraph (e)(2)(i) of this section:

(*1*) A single test net (try net) with a headrope length of 20 feet (6.1 m) or less, if it is either pulled immediately in front of another net or is not connected to another net in any way, if no more than one test net is used at a time, and if it is not towed as a primary net.

(*2*) A beam or roller trawl fished without doors, boards, or similar devices, that has a mouth formed by a rigid frame and rigid vertical bars, if none of the spaces between the bars, or between the bars and the frame, exceed 4 inches (10.2 cm).

(*3*) A shrimp trawler fishing for, or possessing, royal red shrimp, if at least 90 percent (by weight) of all shrimp either found on board, or offloaded from that shrimp trawler is royal red shrimp.

(*4*) A shrimp trawler fishing in the Gulf Area from December 1 through February 28.

(3) *Tow-time restrictions.* (i) *Duration of tows.* If tow-time restrictions are utilized pursuant to paragraphs (e)(2)(ii), (e)(3)(ii), (e)(3)(iii), or (e)(3)(iv) of this section, a shrimp trawler must limit tow times to no more than 90 minutes through October 31, 1992, and thereafter

to no more than 75 minutes. The tow time is measured from the time that the trawl door enters the water until it is removed from the water. For a trawl net that is not attached to a door, the tow time is measured from the time the codend enters the water until it is removed from the water.

(ii) *Alternative to TED requirements.* A shrimp trawler may, as an alternative to complying with the TED requirements of paragraph (e)(2)(i) of this section, comply with the applicable alternative tow times if it qualifies with the area, season, and vessel size requirements set forth in Table 1.

(iii) *Alternative—special environmental conditions.* The Assistant Administrator may allow compliance with tow-time restrictions, as an alternative to the TED requirement of paragraph (e)(2)(i) of this section, if he/she determines that the presence of algae, seaweed, debris or other special environmental conditions in a particular area makes trawling with TED-equipped nets impracticable.

(iv) *Substitute—ineffectiveness of TEDs.* The Assistant Administrator may require compliance with tow-time restrictions, as a substitute for the TED requirement of paragraph (e)(2)(i) of this section, if he/she determines that TEDs are ineffective in protecting sea turtles.

TABLE 1.—ALTERNATIVE TOW TIME TABLE

Area	Season	Vessel sizes
Inshore:		
Atlantic area.	All year	All.
Gulf area	Mar. 1–Nov. 30	All
Southwest Florida area.	All year	All.
Offshore:		
Atlantic area.	All year (special provisions may apply in the North Carolina restricted area).	<25 ft (7.6m).
Gulf area	Mar. 1–Nov. 30	<25 ft (7.6m).
Southwest Florida area.	All year	<25 ft (7.6m).

(Note that tow-time restrictions do not apply to a shrimp trawler using an approved TED in each net during trawling.)

(v) *Notice; applicability, conditions.* The Assistant Administrator will publish notification concerning any tow-time restriction imposed under paragraph (e)(3) (iii) or (iv) of this section in the **Federal Register** and will announce it in summary form on channel 16 of the marine VHF radio. A notification of tow-time restrictions will include findings in support of these restrictions as an alternative to, or as substitute for, the TED requirements of paragraph (e)(2)(i) of this section. The notification will specify the effective dates, the geographic area where tow-time restrictions apply, and any applicable conditions or restrictions that the Assistant Administrator determines are necessary or appropriate to protect sea turtles and ensure compliance, including, but not limited to, a requirement to carry observers, or for all shrimp trawlers in the area to synchronize their tow times so that all trawl gear remains out of the water during certain times. A notification withdrawing tow-time restrictions will include findings in support of that action.

(vi) *Procedures.* The Assistant Administrator will consult with the appropriate fishery officials (state or Federal) where the affected shrimp fishery is located in issuing a notification concerning tow-time restrictions. An emergency notification can be effective for a period of up to 30 days and may be renewed for additional periods of up to 30 days each if the Assistant Administrator finds that the conditions that necessitated the imposition of tow-time restrictions continue to exist. The Assistant Administrator may invite comments on such an action, and may withdraw or modify the action by following procedures similar to those for implementation. The Assistant Administrator will implement any permanent tow-time restriction through rulemaking.

(4) *Approved TEDs.* Any netting, webbing, or mesh that may be measured to determine compliance with this paragraph (e)(4) is subject to measurement, regardless of whether it is wet or dry. Any such measurement will be of the stretched mesh size.

(i) *Hard TEDs.* Hard TEDs are TEDs with rigid deflector grids and are categorized as "hooped hard TEDs," such as the NMFS and Cameron TEDs (Figures 1 & 2), or "single-grid hard TEDs," such as the Matagorda and Georgia TEDs (Figures 3 & 4). Hard TEDs complying with the following generic design criteria are approved TEDs:

(A) *Construction materials.* A hard TED must be constructed of one or a combination of the following materials, with minimum dimensions as follows:

(*1*) Solid steel rod with a minimum outside diameter of ¼ inch (.64 cm);

(*2*) Fiberglass or aluminum rod with a minimum outside diameter of ½ inch (1.27 cm); or

(*3*) Steel or aluminum tubing with a minimum inside diameter of ¼ inch (.64 cm) and a minimum outside diameter of ½ inch (1.27 cm) (schedule 40 tubing).

(B) *Method of attachment.* A hard TED must be sewn into the trawl around the entire circumference of the TED with heavy twine.

(C) *Angle of deflector bars.* The angle of the deflector bars must be between 30° and 50° from the normal, horizontal flow through the interior of the trawl.

(D) *Space between bars.* The space between deflector bars, and between the deflector bars and the frame, must not exceed 4 inches (10.2 cm).

(E) *Position of escape opening.* The entire width of the escape opening from the trawl must be centered on and immediately forward of the frame at either the top or bottom of the net when the net is in its deployed position. The escape opening must be at the top of the net when the slope of the deflector bars from forward to aft is upward, and must be at the bottom when such slope is downward. For a single-grid TED, the escape opening must be cut horizontally along the same plane as the TED, and may not be cut in a fore-and-aft direction.

(F) *Size of escape opening. (1)* On a hooped hard TED, the escape opening must not be smaller than 25 inches by 25 inches (63.5 cm by 63.5 cm) in the Gulf Area or Souuthwest Florida Area, and 30 inches by 30 inches (76.2 cm by 76.2 cm) in the Atlantic Area. If a door frame is used over the escape opening, it must open a minimum height of 10 inches (25.4 cm) in the Gulf Area or Southwest Florida Area, and 12 inches (30.5 cm) in the Atlantic Area.

(*2*) On single-grid hard TED, the escape opening in the net webbing must be at least 32 inches (81.3 cm) in horizontal taut length and, simultaneously, 10 inches (20.5 cm) in vertical taut height in the Gulf Area or Southwest Florida Area, and 35 inches (88.9 cm) in horizontal taut length and, simultaneously, 12 inches (30.48 cm) in vertical taut height in the Atlantic Area. The vertical measurement must be taken at the mid-point of the horizontal measurement.

(G) *Size of hoop or grid. (1) Hooped hard TED. (i)* An oval front hoop on a hard TED must have an inside horizontal measurement of at least 32 inches (81.3 cm) and an inside vertical measurement of at least 20 inches (50.8 cm) in the Gulf Area or Southwest Florida Area, and an inside horizontal measurement of at least 35 inches (88.9 cm) and an inside vertical measurement of at least 30 inches (76.2 cm) in the Atlantic Area.

(*ii*) A circular front hoop on a hard TED must have an inside diameter of at least 32 inches (81.3 cm) in the Gulf Area

or Southwest Florida Area and 35 inches (88.9 cm) in the Atlantic Area.

(2) *Single-grid hard TED.* A single-grid hard TED must have an inside horizontal and vertical measurement of at least 28 inches (71.1 cm) in the Gulf Area or Southwest Florida and 30 inches (76.2 cm) in the Atlantic Area. The required inside measurements must be at the mid-point of the deflector grid.

(ii) *Soft TEDS.* Soft TEDs are TEDs with deflector panels made from polypropylene or polyethylene netting. The following soft TEDs are approved TEDs:

(A) *Morrison TED* (Figures 5 & 6). The Morrison TED uses synthetic mesh webbing for its deflector panel(s). The webbing must consist of number 42 (3-mm thick) or larger polypropylene or polyethylene webbing that is heat-set knotted or braided. The stretched mesh size may not exceed 8 inches (20.3 cm). The webbing may be installed either as one main excluder panel or as a main and two side (jib) excluder panels (Figure 6), as long as it forms a complete barrier to large objects inside the trawl net forward of the codend. The base (leading edge) of the excluder panel(s) must be sewn to the bottom body of the trawl net at least 16 feet 8 inches (5.1 m) forward of the point at which the codend is attached to the trawl net. The apex of the excluder panel(s) must be sewn to the center of the top body of the trawl net not more than 20 inches (50.8 cm) forward of the point at which the codend is attached to the trawl net. The meshes of the leading edge of the excluder panel shall be sewn evenly onto the bottom belly of the trawl following the same row of meshes from seam to seam including the wings (i.e., the sides of the trawl that separate the top from the bottom). The leading edge of the panel cannot be installed on a bias. If a net extension is inserted forward of the codend, the base and apex attachments of the excluder panel(s) must be measured from the forward attachment points of such extension. The horizontal taut length of the stretched main excluder panel may not be less than 15 feet (4.54 m). Each point on the circumference of the webbing must be sewn to the trawl net. The meshes of the webbing must be under tension when the codend is pulled aft, thus forming diamond patterns pointing toward the top of the trawl net. As an escape opening, a slit at least 4 feet 8 inches (1.4 m) in taut length must be cut in a fore-and-aft direction at the top of the trawl net immediately forward of the apex of the webbing. The slit may not be covered or closed in any manner.

(B) *Parrish TED* (Figure 7). The Parrish TED consists of an extension and deflector panel made of synthetic mesh and a steel frame. The extension must be a piece of 1¾-inch (4.5-cm) stretched mesh, no. 15 thread, treated nylon, measuring 150 meshes by 100 meshes and installed in the trawl. When installed, the extension must be cylindrically shaped with a circumference of 150 meshes and a depth of 100 meshes. The deflector panel must slope down the inside of the extension and must be a rectangular piece of 8-inch (20.3-cm), stretched mesh, 3-mm diameter, braided polyethylene. The deflector panel must measure eight meshes across its leading and trailing edges and be 15½ meshes deep. The eight meshes at the leading edge of the deflector panel must be sewn into the small (1¾-inch) (4.5-cm) mesh of the extension three meshes down from the top edge of the extension. The eight meshes at the trailing edge must be attached to the top edge of the frame. Each side edge of the deflector panel must be attached at 5⅝-inch (14.3-cm) intervals to a ⅜-inch (1.0-cm) diameter, three-strand polydacron rope, which must be attached to the small mesh of the extension at ⅝-inch (14.3-cm) intervals. The deflector panel must form a complete barrier to large objects inside the extension forward of the frame. The frame must be a rectangular, ⅜-inch (1.0-cm) diameter, welded galvanized steel rod unit with a 40-inch by 4-inch (101.6-cm by 10.2-cm) opening and small pad eyes at the top corners. The trailing-edge meshes of the deflector panel must be attached to the top of the frame, and 50 lateral meshes of the extension netting (1¾-inch (4.5-cm mesh) must be centered and sewn to the bottom and sides of the frame. The escape opening must consist of a lateral slit, measuring 40 meshes, cut from the leading edge at the bottom of the frame. A 50-inch (127.0-cm), ¼-inch (.6-cm) diameter, bungee cord must be laced through the meshes at the cut. Opposing ends of the bungee cord must be secured to the opposing pad eyes at the top of the frame. One end of a flap measuring 50 meshes across by 30 meshes deep must be attached to the meshes at the cut.

(C) *Andrews TED* (Figures 8a & 8b). The Andrews TED is a funnel constructed of 5-inch (12.7-cm) stretched mesh polyethylene or polypropylene webbing that is sewn inside a shrimp trawl. The leading edge of the funnel must be sewn with heavy twine at all points to the outer trawl beginning on the row of meshes located 20 meshes behind the center of the footrope and continuing around the circumference of the trawl, following the same row of meshes. The webbing must not be laced with rope. The funnel must taper to an escape opening in the bottom of the trawl. The rear edge of the escape opening must be located no more than 20 inches (50.8 cm) ahead of the net extension. The trailing edge on the funnel must be sewn at all points around the circumference of the escape opening. The escape opening must be at least 96 inches (243.8 cm) in circumference. A webbing flap may be used to cover the escape opening if no device holds the webbing flap closed or otherwise restricts the opening, and if such flap is constructed of webbing which has a stretched mesh size no larger than 2-inch (5.1-cm), lies on the outside of the trawl, is attached along its entire forward edge forward of the escape opening, is 50 meshes wide and 15 meshes deep, does not overlap the exit opening more than five meshes on each side (it may be attached along the 15-mesh edge), and maintains an opening of at least 48 inches (121.9 cm) in a stretched, straight-line position.

(iii) *Allowable modifications.* No modifications may be made to an approved soft TED. Only the following modifications may be made to an approved hard TED:

(A) Floats may be attached to the TED either outside or inside of the net, but not to a flap. Floats attached inside the net must be behind the rear surface of the TED.

(B) An accelerator funnel may be installed in the trawl, if it is made of net webbing material with a stretched mesh size not greater than 1⅝ inches (4.1 cm), if it has an inside horizontal opening of at least 39 inches (99.0 cm) when measured in a taut position, if it is inserted in the net immediately forward of the TED, and if its rear edge does not extend past the bars of the TED. The accelerator funnel may be attached to the TED if not more than ⅓ of its circumference is attached, if the inside horizontal opening of at least 39 inches (99.0 cm) is maintained. In a downward shooting TED only the bottom ⅓ of the circumference of the funnel may be attached. In an upward shooting TED only the upper ⅓ of the circumference of the funnel may be attached.

(C) A webbing flap may be used to cover the escape opening if no device holds it closed or otherwise restricts the opening, and if it is constructed of webbing with a stretched mesh size no larger than 1⅝-inch (4.1–cm), lies on the outside of the trawl, is attached along its entire forward edge forward of the escape opening, it not attached on the sides more than 6 inches (15.2 cm) beyond the posterior edge of the grid, does not extend more than 24 inches

(61.0 cm) beyond the posterior edge of the grid.

(5) *Revision of generic design criteria and allowable modification of hard TEDs and additional soft TEDs.*

(i) The Assistant Administrator may revise the generic design criteria for hard TEDs set forth in paragraph (e)(4)(i) of this section, may approve allowable modifications to hard TEDs in addition to those authorized in paragraph (e)(4)(iii) of this section, or may approve soft TEDs in addition to those listed in paragraph (e)(4)(ii) of this section, by a regulatory amendment if, according to a NMFS-approved scientific protocol, they demonstrate a sea turtle exclusion rate of 97 percent or greater (or an equivalent exclusion rate). Two such protocols have been published by NMFS (52 FR 24262, June 29, 1987; and 55 FR 41092, Oct. 9, 1990). Testing under the protocol must be conducted under the supervision of the Assistant Administrator, and shall be subject to all such conditions and restrictions as the Assistant Administrator deems appropriate. Any person wishing to participate in such testing should contact the Director, Southeast Fisheries Center, NMFS, 75 Virginia Beach Drive, Miami, FL 33149.

(ii) Upon application, the Assistant Administrator may issue permits, subject to such conditions and restrictions as the Assistant Administrator deems appropriate, authorizing public or private experimentation aimed at improving shrimp retention efficiency of existing approved TEDs and at developing additional TEDs, or conducting fishery research, that would otherwise be subject to paragraph (e)(2) of this section. Applications should be addressed to the Director, Southeast Region, NMFS, 9450 Koger Blvd., St. Petersburg, FL 33702.

(6) *Limitations on incidental takings during fishing activities.* (i) *Limitations.* The exemption for incidental takings of sea turtles in paragraph (e)(1) of this section does not authorize incidental takings during fishing activities if the takings:

(A) Would violate the restrictions, terms, or conditions of an incidental take statement or biological opinion;

(B) Would violate the restrictions, terms, or conditions of an incidental take permit; or

(C) May be likely to jeopardize the continued existence of a species listed under the ESA.

(ii) *Determination; restrictions on fishing activities.* The Assistant Administrator may issue a determination that incidental takings during fishing activities are unauthorized. Pursuant thereto, the Assistant Administrator may restrict fishing activities in order to conserve a species listed under the ESA, including, but not limited to, restrictions on the fishing activities of vessels subject to paragraph (e)(2)(i) of this section. The Assistant Administrator will take such action if he determines that restrictions are necessary to avoid unauthorized takings that may be likely to jeopardize the continued existence of a listed species. The Assistant Administrator may withdraw of modify a determination concerning unauthorized takings or any restriction on fishing activities if the Assistant Administrator determines that such action is warranted.

(iii) *Notice; applicability; conditions.* The Assistant Administrator will publish a notification of a determination concerning unauthorized takings or a notification concerning the restriction of fishing activities in the **Federal Register**. The Assistant Administrator will provide as much advance notice as possible consistent with the requirements of the ESA, and will announce the notification in summary form on channel 16 of the marine VHF radio. Notification of a determination concerning unauthorized takings will include findings in support of that determination; specify the fishery, including the target species and gear used by the fishery, the area, and the times, for which incidental takings are not authorized; and include such other conditions and restrictions as the Assistant Administrator determines are necessary or appropriate to protect sea turtles and ensure compliance. Notification of restriction of fishing activities will include findings in support of the restriction, will specify the time and area where the restriction is applicable, and will specify any applicable conditions or restrictions that the Assistant Administrator determines are necessary or appropriate to protect sea turtles and ensure compliance. Such conditions and restrictions may include, but are not limited to, limitations on the types of fishing gear that may be used, tow-time restrictions, alteration or extension of the periods of time during which particular tow-time requirements apply, requirements to use TEDs, and requirements to provide observers. Notification of withdrawal or modification will include findings in support to that action.

(iv) *Procedures.* The Assistant Administrator will consult with the appropriate fisheries officials (state or Federal) where the fishing activities are located in issuing notification of a determination concerning unauthorized takings or notification concerning the restriction of fishing activities. An emergency notification will be effective for a period of up to 30 days and may be renewed for additional periods of up to 30 days each. The Assistant Administrator may invite comments on such action, and may withdraw or modify the action by following procedures similar to those for implementation. The Assistant Administrator will implement any permanent determination or restriction through rulemaking.

* * * * *

[FR Doc. 92-21331 Filed 9-1-92; 4:57 pm]

BILLING CODE 3510-22-M

Proposed Rules

Federal Register
Vol. 57, No. 174
Tuesday, September 8, 1992

This section of the FEDERAL REGISTER contains notices to the public of the proposed issuance of rules and regulations. The purpose of these notices is to give interested persons an opportunity to participate in the rule making prior to the adoption of the final rules.

DEPARTMENT OF AGRICULTURE

Animal and Plant Health Inspection Service

7 CFR Part 319

[Docket No. 91-033-1]

Postentry Quarantine of Plants

AGENCY: Animal and Plant Health Inspection Service, USDA.

ACTION: Proposed rule.

SUMMARY: We are proposing to amend our regulations that require postentry quarantine for certain imported plants by adding requirements limiting such imports to articles destined for States that have signed an agreement with the Animal and Plant Health Inspection Service. In the agreement, States would agree to inspect and monitor postentry quarantine sites, and to monitor importer compliance with postentry quarantine requirements. This action is necessary to standardize the involvement of States in postentry quarantine activities, and to allow States to accurately estimate the resources they need to devote to postentry quarantine activities.

We also propose to add a requirement that the importer of an article required to be grown in postentry quarantine may not propagate the article, allow its propagation, or move it off the premises without written permission of an inspector. This action is necessary to ensure that plants grown in postentry quarantine do not present a significant risk of spreading plant pests.

DATES: Consideration will be given only to comments received on or before November 9, 1992.

ADDRESSES: To help ensure that your written comments are considered, send an original and three copies to Chief, Regulatory Analysis and Development, PPD, APHIS, USDA, room 804, Federal Building, 6505 Belcrest Road, Hyattsville, MD 20782. Please state that your comments refer to Docket Number 91-033-1. Comments received may be inspected at USDA, room 1141, South Building, 14th Street and Independence Avenue SW., Washington, DC, between 8 a.m. and 4:30 p.m., Monday through Friday, except holidays.

FOR FURTHER INFORMATION CONTACT: Mr. Frank Cooper, Senior Operations Officer, Port Operations, Animal and Plant Health Inspection Service, U.S. Department of Agriculture, room 639-C, Federal Building, 6505 Belcrest Road, Hyattsville, MD 20782, 301-436-5231.

SUPPLEMENTARY INFORMATION:

Background

The Plant Quarantine Act (7 U.S.C. 151 *et seq.*) and the Federal Plant Pest Act (7 U.S.C. 150aa *et seq.*) authorize the Department to prohibit or restrict the importation into the United States of any plants, roots, bulbs, seeds, or other plant products in order to prevent the introduction into the United States of exotic plant pests.

Regulations promulgated under these authorities include, among others, 7 CFR 319.37 through 319.37-14, "Subpart—Nursery Stock, Plants, Roots, Bulbs, Seeds, and Other Plant Products" (referred to below as the subpart). The subpart governs the importation of living plants, plant parts, and seeds for or capable of propagation, and related articles. Other sections of part 319 deal with imported articles such as cut flowers, or fruits and vegetables intended for consumption.

Section 319.37-7 of the subpart allows certain articles to be imported into the United States only if, among other requirements, they are grown under special postentry quarantine conditions for a period after importation. The period of quarantine ranges from six months to two years, depending on the genus of the article. During that period, the articles are kept separate from domestic plants, are subject to inspection by inspectors, and must meet other conditions necessary to prevent the dissemination of plant diseases or other plant pests.

The postentry quarantine provision is designed for importing regulated articles for which there is a slight, but existing risk of infection with certain plant diseases in the place of origin. Since many of the regulated articles listed in § 319.37-7 are shipped in a dormant or leafless state, diseases would not be readily revealed by inspection at the time of importation. The postentry quarantine growing period would allow manifestation of these diseases.

Regulated articles are grown under postentry quarantine in many States nationwide. Historically, State governments have cooperated with the Animal and Plant Health Inspection Service (APHIS) by assigning State inspectors to inspect, approve, and monitor postentry quarantine sites. The basic requirements for growing an imported regulated article under postentry quarantine are contained in the regulations, with detailed requirements recorded in a written agreement between APHIS and the importer of the article (see current § 319.37-7(c)).

Because APHIS relies on State assistance to ensure that plants grown at postentry quarantine sites are grown in accordance with the requirements of the subpart, the subpart should describe the role of the States. We propose to add language to the subpart establishing written agreements between APHIS and the States detailing Federal and State responsibilities and authorities regarding postentry quarantine sites. We also propose to issue permits allowing the importation of articles subject to postentry quarantine only for articles destined for States that have signed such an agreement.

We believe establishing these written State postentry quarantine agreements would aid both APHIS and the States in effectively administering the postentry quarantine requirements of the subpart. From the APHIS perspective, the agreement would establish a uniform, nationwide standard for State participation in the program, and would prevent the importation of articles destined for States that have not agreed to take the steps needed to meet the requirements of the subpart. From the State perspective, the agreement would detail State responsibilities, allowing States to plan their allocation of resources to the postentry quarantine program in an orderly manner. The agreement would also provide the States a role in the import permit review process, to ensure that the number or size of shipments for which importers are granted import permits would be appropriate for the State's resources available to supervise postentry quarantine sites.

In the proposed State postentry quarantine agreement, the State would agree to perform the following actions:

—Establish and enforce State regulations and requirements necessary to inspect sites and monitor compliance with postentry quarantine growing in accordance with this section. This requirement would help ensure that the State has established the necessary legal authorities to supervise the postentry quarantine site and enforce procedures consistent with the subpart.

—Review pending permit applications upon request of Plant Protection and Quarantine (PPQ), and report to PPQ whether the State would be able to provide inspection services for the proposed postentry quarantine. This would provide APHIS with useful data to determine when import permits should be issued, based on availability of APHIS and State resources to enforce the requirements of the subpart.

—Provide the services of State inspectors to inspect sites to be used for postentry quarantine, and to monitor compliance with the requirements of this section during the use of sites for postentry quarantine.[1] This would formalize the existing procedures under which States provide services to alleviate the burden on APHIS resources, allowing APHIS to expend its resources more effectively by concentrating on the import permit process and managing postentry quarantine on a national basis.

—Report to Plant Protection and Quarantine any evidence of exotic plant pests or diseases found at a postentry quarantine site by State inspectors, recommend to Plant Protection and Quarantine safeguards or mitigation measures to control the pests or diseases, and supervise the application of safeguards or mitigation measures approved by PPQ. This would ensure that the central purpose of postentry quarantine, the identification and control of exotic plant pests inadvertently introduced with imported articles, is met.

—Report to Plant Protection and Quarantine any propagation or increase in the number of plants that occurs during postentry quarantine. This would help APHIS ensure that during postentry quarantine, articles are not propagated to an extent that would result in an inability to control the dissemination of plant pests, if any are present. In some cases in the past, articles in postentry quarantine have been propagated to a point where there were too many articles at a site to readily inspect, or to a point where the articles spread beyond the limits of the site authorized for postentry quarantine. To address this problem, we propose to require States to report propagation or increase, and, as discussed below in the section concerning postentry quarantine growing agreements, we also propose to require importers to obtain the written permission of an inspector before propagating articles grown in quarantine or allowing their propagation.

We also propose that after a State postentry quarantine agreement is signed, either APHIS or the State may terminate the agreement by giving written notice to the other party. The termination would be effective 60 days following written notice with regard to future movements of postentry quarantine articles to that State. However, the State would be responsible for continuing to provide postentry quarantine services until the time the plant material is eligible to be released from quarantine, for all postentry quarantine material already in the State, and for all postentry quarantine material that arrives in the State within 60 days of the date the State or APHIS gives notice that it wishes to terminate the postentry quarantine agreement. APHIS believes it needs 60 days notice prior to termination in order to inform permittees and to deal with pending requests to import articles requiring postentry quarantine to a State that terminates its participation.

For States that sign a postentry quarantine agreement, APHIS would provide the following services in support of postentry quarantine activities:

—APHIS would seek State review of permit applications for postentry quarantine material, and would issue permits only after determining that inspector services are available to monitor the postentry quarantine.

—APHIS, upon a State's request, would provide training, technical advice, and pest identification services to State officials involved with postentry quarantine services in accordance with the regulations.

—APHIS would notify State officials when plant material destined for postentry quarantine in their State arrives in the United States, and would notify State officials when materials in postentry quarantine may be released from quarantine in their State.

The responsibilities of both the State and APHIS would be recorded in each State postentry quarantine agreement signed between APHIS and a State. The Administrator of APHIS, or his designee, would sign the agreement for APHIS, and the State Plant Regulatory Official would sign for the State. We propose to define State Plant Regulatory Official as "The official authorized by the State to sign agreements with Federal agencies involving operations of the State plant protection agency." We propose to define State as "Each of the 50 States of the United States, the District of Columbia, Guam, Northern Mariana Islands, Puerto Rico, the Virgin Islands of the United States, and all other territories and possessions of the United States."

We also propose to add several requirements to current § 319.37–7(c) of the regulations, concerning the agreement which importers of postentry quarantine articles must sign with APHIS. We propose to change this paragraph to require that the importer may not propagate the articles, allow their propagation, or move them off the premises without written permission of an inspectors. This action appears necessary to ensure that plants grown in postentry quarantine do not present a significant risk of spreading plant pests. Unrestricted propagation could result in infected imported plants being grown too close to domestic plants of the same genus, and in an increased risk that some plants would be moved from the premises and pose a risk of spreading plant pests.

We also propose to change current paragraphs (a) and (c) of § 319.37–7 to require that the person who applies for a permit under § 319.37–3 to import an article requiring postentry growing (the importer) must also sign a postentry quarantine growing agreement with APHIS. The person who imports an article into the country should bear responsibility to ensure that it meets postentry quarantine requirements after its arrival. It is not mandatory that the importer who signs a postentry quarantine growing agreement be physically present at the growing site to supervise its operations, as the importer may use employees or other personnel to operate the growing site. However, in enforcing the requirements of the regulations, we propose to deal directly with the person who signs a postentry quarantine growing agreement, where such an agreement exists. We would serve any notices required by the regulations to that person, and would

[1] In accordance with laws of individual States, services provided by State inspectors may be subject to charges imposed by the State.

hold that person reponsible for completing any disposal, treatment, or safeguarding ordered under proposed § 319.37–7(f), and for any costs and charges applicable under proposed § 319.37–7(f).

We also propose to change current § 319.37–7(c)(6) (new § 319.37–7(d)(6)), which requires notification of PPQ if an article at a postentry growing site dies or shows abnormalities. We propose to require the importer to notify an inspector, orally or in writing, within 30 days of the time an article shows abnormalities, dies, or is killed by the importer or any other person, and to keep the article for 60 days and turn it over to an inspector on request. This change would help inspectors to determine whether deaths or abnormalities of articles are caused by plant pests.

We also propose to add a new § 319.37–7(f) specifying actions inspectors may take regarding articles that are grown in violation of the regulations, or that are found to present a risk of introducing plant pests. For violations involving articles grown under a postentry quarantine growing agreement, the person who signed the agreement would be responsible for carrying out actions ordered by an inspector. This new paragraph states that inspectors may order such articles destroyed, shipped to a point outside the United States, or subjected to treatments or safeguards to control plant pests. If an article subject to postentry quarantine growing is found at a site that is not authorized for such growing, the inspector may order the owner of the article, or the person who owns or is in possession of the site where the article is growing, to take one of the above actions or to sign a postentry quarantine growing agreement or to move the article to an authorized postentry quarantine site. This paragraph also states that in choosing which action to order and in setting the time limit for the action, the inspector shall consider the degree of pest risk presented by the plant pests associated with the kind of article, the types of other host materials for the pest in or near the growing site, the climate and season at the site in relation to the pest's survival, and the availability of treatment facilities. Finally, proposed paragraph (f) states that all costs pursuant to any action ordered by an inspector in accordance with the regulations shall be borne by the person who signed the postentry quarantine growing agreement covering the site where the articles were grown, or if no such agreement was signed, by the owner of the articles at the growing site.

To clarify the above references to inspectors ordering actions with regard to articles subject to postentry quarantine but grown in the absence of a postentry quarantine growing agreement, we should note that it is not always possible to determine the identity of the "owner" of such articles. For articles imported under an authorized postentry quarantine growing agreement and grown at an authorized growing site, the importer is the person responsible for implementing actions ordered by an inspector, because he or she signed the permit application and the postentry quarantine growing agreement. However, if an inspector discovers articles subject to postentry quarantine being grown not in accordance with a postentry quarantine growing agreement, on a site that was not authorized, it is more difficult to identify the person to hold responsible for taking actions ordered by an inspector. In many cases such articles are grown under the supervision of one person, but are legally owned by another person. The identity of the owner may not be readily or accurately ascertained by an inspector questioning the person found growing the articles.

Because articles subject to postentry quarantine present a risk of spreading plant pests, it is important that actions ordered by an inspector be implemented quickly. To accomplish this, it is necessary to give timely notice to the person who will be held responsible for implementing the actions. In cases where articles are grown without being covered by a signed postentry quarantine growing agreement, the identity of the owner may be in doubt and it may not be possible for an inspector to give him or her timely notice of actions required to control pest risk. Therefore, we are proposing in § 319.37–7(f)(1) that the regulations allow an inspector to issue an emergency action notification (PPQ form 523) requiring actions regarding the articles to either the owner of the articles, or to the person who owns or is in possession of the site on which the articles are being grown contrary to the regulations. The person named in the notice, whether the owner of the articles or the person who owns or is in possession of the site, would be responsible for implementing actions specified in the notice. Those actions could include signing a postentry quarantine growing agreement, destroying the articles, shipping them to a point outside the United States, moving them to an authorized postentry quarantine site, and/or applying treatments or other safeguards to the articles.

We are not making the person who owns or is in possession of the growing site for unauthorized articles responsible for costs pursuant to any actions ordered by an inspector, because there is no need to assign costs immediately to control pest risk, and the owner of the articles has the most direct legal responsibility for these costs. In § 319.37–7(f)(3) of the regulations we propose to identify the owner of the articles as responsible for such costs. The owner of the articles, the owner or person in possession of the growing site, and possibly other persons involved in the growing may have contractual arrangements regarding costs and responsibilities, but we believe the owner of the article is the proper person to identify in the regulations as responsible for costs associated with articles.

Executive Order 12291 and Regulatory Flexibility Act

We are issuing this proposed rule in conformance with Executive Order 12291, and we have determined that it is not a "major rule." Based on information compiled by the Department, we have determined that this rule, if adopted, would have an effect on the economy of less than $100 million; would not cause a major increase in costs or prices for consumers, individual industries, Federal, State, or local government agencies, or geographic regions; and would not cause a significant adverse effect on competition, employment, investment, productivity, innovation, or on the ability of United States-based enterprises to compete with foreign-based enterprises in domestic or export markets.

This proposed amendment, if adopted, would define responsibilities of APHIS and the States in carrying out postentry quarantine operations in accordance with 7 CFR 319.37–7. Defining these responsibilities would standardize the involvement of States in postentry quarantine activities, and allow States to accurately estimate the resources they need to devote to postentry quarantine activities.

If this proposal is adopted, States would monitor and inspect postentry quarantine sites; monitor importer compliance with postentry quarantine requirements on behalf of APHIS; inspect plants for evidence of exotic pests (at least once each year for plants required to be grown in quarantine for two years, and at least once for plants required to be grown in quarantine for

less than two years); report to PPQ any increase from plants under postentry quarantine and any evidence of exotic plant pests found at postentry quarantine sites, and recommend to PPQ safeguards or mitigation measures to control the pests.

Increased economic costs to society are expected to be negligible as a result of the proposed rule change. We have consulted plant protection services of the States that are currently cooperating in the postentry quarantine program, and they have indicated that they do not expect the changes we propose to substantially increase or decrease the amount of postentry material grown in their States, or to significantly increase or decrease the demands for services from their inspectors. States have been largely responsible for the administrative costs of enforcement since the postentry program was first initiated. State inspectors have traditionally inspected postentry quarantine sites, and monitored compliance with Federal postentry regulations. Historically, State inspectors have also reported to PPQ any evidence of exotic plant pests, and propagation or increases in the number of plants contained in postentry quarantine areas.

Approximately 130 new sites are authorized for postentry quarantine in an average year, and approximately the same number of site authorizations expire each year. We do not expect the proposed changes to result in significant changes to these numbers.

Under the proposed rule, APHIS would have the authority to limit entry of materials requiring postentry quarantine based on availability of APHIS and State resources to enforce the requirements of the regulations. It is not expected that this authority would be used frequently to deny shipments entry; however, some importers will likely be unable to import some materials due to this provision. The amount of economic impact would depend on the per unit value and number of plants that would be denied entry due to limited APHIS and State resources.

Under the circumstances described above, the Administrator of the Animal and Plant Health Inspection Service has determined that this action would not have a significant economic impact on a substantial number of small entities.

Executive Order 12372

This program/activity is listed in the Catalog of Federal Domestic Assistance under No. 10.025 and is subject to the provisions of Executive Order 12372, which requires intergovernmental consultation with State and local officials. (See 7 CFR, subpart V).

Executive Order 12778

This proposed rule has been reviewed under Executive Order 12778, Civil Justice Reform. If this proposed rule is adopted:

(1) All State and local laws and regulations that are inconsistent with this rule will be preempted;

(2) No retroactive effect will be given to this rule; and

(3) It will not require administrative proceedings before parties file suit in court challenging its provisions.

Paperwork Reduction Act

In accordance with section 3507 of the Paperwork Reduction Act of 1980 (44 U.S.C. chapter 35), the information collection provisions that are included in this proposed rule will be submitted for approval to the Office of Management and Budget (OMB). Your written comments will be considered if you submit them to the Office of Information and Regulatory Affairs, OMB, Attention: Desk Officer for APHIS, Washington, DC 20503. You should submit a duplicate copy of your comments to:

(1) Chief, Regulatory Analysis and Development, PPD, APHIS, USDA, room 804, Federal Building, 6505 Belcrest Road, Hyattsville, MD 20782 and

(2) Clearance Officer, OIRM, USDA, room 404–W, 14th Street and Independence Avenue, SW, Washington, DC 20250.

List of Subjects in 7 CFR Part 319

Bees, Coffee, Cotton, Fruits, Honey, Imports, Nursery stock, Plant diseases and pests, Quarantine, Reporting and recordkeeping requirements, Rice, Vegetables.

Under the circumstances described above, we propose to amend 7 CFR part 319 as follows:

PART 319—FOREIGN QUARANTINE NOTICES

1. The authority citation for "Subpart—Nursery Stock, Plants, Roots, Bulbs, Seeds, and Other Plant Products," §§ 319.37 through 319.37–14, would be revised to read as follows:

Authority: 7 U.S.C. 150dd–150FF, 154, 155, 157, 159, 160, 162, 164a, and 450; 7 CFR 2.17, 2.51, and 371.2(c).

§ 319.37–1 [Amended]

2. In § 319.37–1, the following definition would be added in alphabetical order:

* * * * *

State Plant Regulatory Official. The official authorized by the State to sign agreements with Federal agencies involving operations of the State plant protection agency.

* * * * *

3. Section 319.37–7 would be amended as follows:

a. Paragraph (a) would be revised.

b. Paragraphs (c) and (d) would be redesignated as paragraphs (d) and (e).

c. A new paragraph (c) would be added.

d. In newly-designated paragraph (d), the introductory language and paragraphs (d)(1) and (d)(6) would be revised.

e. A new paragraph (f) would be added.

f. A new paragraph (g) would be added.

As amended, § 319.37–7 would read as follows:

§ 319.37–7 Postentry quarantine.

(a) The following restricted articles, from the designated countries and localities, and any increase therefrom must be grown under postentry quarantine conditions specified in paragraphs (c) and (d) of this section, and may be imported or offered for importation into the United States only:

(1) If destined for a State that has completed a State postentry quarantine agreement in accordance with paragraph (c) of this section. A current list of such States is available from Port Operations, Plant Protection and Quarantine, APHIS, room 632, Federal Building, 6505 Belcrest Road, Hyattsville, MD 20782, (301) 436–8295;

(2) If a postentry quarantine growing agreement has been completed and submitted to Plant Protection and Quarantine in accordance with paragraph (d) of this section. The agreement must be signed by the person issued a written permit for importation of the article (the importer) in accordance with § 319.37–3; and,

(3) If Plant Protection and Quarantine has determined that the completed postentry quarantine growing agreement fulfills the applicable requirements to monitor the postentry quarantine.

* * * * *

(c) *State postentry quarantine agreement.* (1) Articles required to undergo postentry quarantine in accordance with this section may only be imported if destined for postentry quarantine growing in a State which has entered into a written agreement with the Animal and Plant Health Protection Service, signed by the Administrator or his or her designee and by the State Plant Regulatory Official.

(2) In any such written agreement, the State shall agree to:

(i) Establish State regulations and requirements prior to the effective date of the agreement and enforce such regulations and requirements necessary to inspect sites and plants growing in postentry quarantine and to monitor compliance with postentry quarantine growing in accordance with this section;

(ii) Review pending permit applications for articles to be grown under postentry quarantine conditions in that State, upon request of Plant Protection and Quarantine, and report to the Postentry Quarantine Unit of Plant Protection and Quarantine whether the State would be able to provide inspection and monitoring services for the proposed postentry quarantine;

(iii) Provide the services of State inspectors to: Inspect sites to be used for postentry quarantine; report to the Postentry Quarantine Unit of Plant Protection and Quarantine whether the site is of adequate size to contain the number of plants proposed for importation, including potential increase if increase is allowed; inspect plants for evidence of exotic pests at least once during the first year and once during the second year for plants required to be grown in postentry quarantine for two years, and at least once for plants required to be grown in quarantine for less than two years; and monitor compliance with the requirements of this section during the use of the sites for postentry quarantine;

(iv) Report to the Postentry Quarantine Unit of Plant Protection and Quarantine any evidence of exotic plant pests found at a postentry quarantine site by State inspectors, recommend to Plant Protection and Quarantine safeguards or mitigation measures to control the pests, and supervise the application of safeguards or mitigation measures approved by Plant Protection and Quarantine, and

(v) Report to the Postentry Quarantine Unit of Plant Protection and Quarantine any propagation or increase in the number of plants that occurs during postentry quarantine.

(3) In any such written agreement, the Administrator shall agree to:

(i) Seek State review of permit applications for postentry quarantine material in that State, and issue permits only after determining that State services are available to monitor the postentry quarantine;

(ii) Upon request of the State, provide training, technical advice, and pest identification services to State officials involved in providing postentry quarantine services in accordance with this section;

(iii) Notify State officials, in writing and within ten days of the arrival, when plant material destined for postentry quarantine in their State arrives in the United States, and notify State officials in writing when materials in postentry quarantine may be released from quarantine in their State.

(4) *Termination of State postentry quarantine agreement.* A State postentry quarantine agreement may be terminated by either the Administrator or the State Plan Regulatory Official by giving written notice of termination to the other party. The effective date of the termination will be 60 days after the date of actual receipt of notice, with regard to future importation to that State of articles requiring postentry quarantine in accordance with this section. When a postentry quarantine agreement is terminated by either the State Plant Regulatory Official or the Administrator, APHIS and the affected State shall continue to provide postentry quarantine services in accordance with its postentry quarantine agreement, until the time the plan material is eligible to be released from quarantine, for all postentry quarantine material already in the State, and for all postentry quarantine material that arrives in the State prior to the effective date of termination.

(d) *Postentry quarantine growing agreements.* Any restricted article required to be grown under postentry quarantine conditions, as well as any increase therefrom, shall be grown in accordance with a postentry quarantine growing agreement signed by the person (the importer) applying for a written permit in accordance with § 319.37–3 for importation of the article and submitted to Plant Protection and Quarantine, which specifies the kind, number, and origin of plants to be imported, and whereby the signer agrees to comply with the following conditions for the period of time specified below:

(1) To grow such article or increase therefrom only on specified premises owned, rented, or otherwise in possession of the importer, within a space of dimensions designated by an inspector, and to move, propagate, or allow propagation of the article or increase therefrom or parts thereof only with the written permission of an inspector and only to the extent prescribed by the inspector;

* * * * *

(6) To notify an inspector, orally or in writing, within 30 days of the time the importer or the person in charge of the growing site finds any abnormality of the article, or the article dies or is killed by the importer, the person in charge of the growing site, or any other person; to retain the abnormal or dead article for at least 60 days following that date of notification; and to give the abnormal or dead article to an inspector upon request;

* * * * *

(f) *Inspector-ordered disposal, movement, or safeguarding of restricted articles; costs and charges; civil and criminal liabilities.*

(1) *Growing at unauthorized sites.* If an inspector determines that any article subject to the postentry quarantine growing requirements of this section, or any increase therefrom, is being grown at an unauthorized site, the inspector may file an emergency action notification (PPQ form 523) with the owner of the article or the person who owns or is in possession of the site on which the article is being grown. The person named in the form 523 must within the time specified in form 523, sign a postentry quarantine growing agreement, destroy, ship to a point outside the United States, move to an authorized postentry quarantine site, and/or apply treatments or other safeguards to the article, the increase therefrom, or any portion of the article or the increase therefrom, as prescribed by an inspector to prevent the introduction of plant pests into the United States. In choosing which action to order and in setting the time limit for the action, the inspector shall consider the degree of pest risk presented by the plant pest(s) associated with the kind of article (including increase therefrom), the types of other host materials for the pest in or near the growing site, the climate and season at the site in relation to the pest's survival, and the availability of treatment facilities.

(2) *Growing at authorized sites.* If an inspector determines that articles grown at a site specified in an authorized postentry quarantine growing agreement present a risk of introducing plant pests into the United States, or are being grown contrary to the provisions of this section, the inspector shall issue an emergency action notification (PPQ form 523) to the person who signed the postentry quarantine growing agreement. That person shall be responsible for carrying out all actions specified in the emergency action notification. The emergency action notification may extend the time for which the articles and the increase therefrom must be grown under the postentry quarantine conditions specified in the authorized postentry quarantine growing agreement, or may require that the person named in the notification must destroy, ship to a point

outside the United States, or apply treatments or other safeguards to the article, the increase therefrom, or any portion of the article or the increase therefrom, within the time specified in the emergency action notification. In choosing which action to order and in setting the time limit for the action, the inspector shall consider the degree of pest risk presented by the plant pest(s) associated with the kind of article (including increase therefrom), the types of other host materials for the pest in or near the growing site, the climate and season at the site in relation to the pest's survival, and the availability of treatment facilities.

(3) *Costs and charges.* All costs pursuant to any action ordered by an inspector in accordance with this section shall be borne by the person who signed the postentry quarantine growing agreement covering the site where the articles were grown, or if no such agreement was signed, by the owner of the articles of the growing site.

(4) *Civil and criminal liabilities.* Any person who moves an article subject to postentry quarantine growing requirements from the site specified for that article in an authorized postentry quarantine growing agreement, or who otherwise handles such an article contrary to the requirements of this section, shall be subject to such civil penalties and such criminal liabilities as are provided by 18 U.S.C. 1001, 7 U.S.C. 150gg and 163, or other applicable Federal statutes.

(g) *State.* Each of the 50 States of the United States, the District of Columbia, Guam, Northern Mariana Islands, Puerto Rico, the Virgin Islands of the United States, and all other territories and possession of the United States.

Done in Washington, DC, this 2nd day of September 1992.

Robert Melland,

Administrator, Animal and Plant Health Inspection Service.

[FR Doc. 92–21533 Filed 9–4–92; 8:45 am]

BILLING CODE 3410–34–M

DEPARTMENT OF COMMERCE

National Oceanic and Atmospheric Administration

15 CFR Part 946

[Docket No. 920383–2083]

RIN 0648–AE73

Weather Service Modernization

AGENCY: National Weather Service, National Oceanic and Atmospheric Administration, Department of Commerce.

ACTION: Proposed rule and request for comment.

SUMMARY: The National Weather Service proposes rules to establish the internal process that it will follow in certifying that there will be no degradation of weather services as a result of consolidating, automating, or relocating a field office during the initial stage of modernizing the National Weather Service or of closing a field office during the second stage of modernization.

DATES: Comments are requested until November 9, 1992.

ADDRESSES: Comments should be sent to Julie Scanlon, NOAA/GC, SSMC2, Room 18119, 1335 East-West Highway, Silver Spring, Maryland 20910.

FOR FURTHER INFORMATION CONTACT: Louis Boezi, (301) 713–0397.

SUPPLEMENTARY INFORMATION:

Background

Since 1950, significant improvements have been made in the prediction of large-scale weather features (high pressure areas, large storms) owing to increased knowledge of atmospheric processes, new observational techniques such as radar and satellites, and the advent of large computers and numerical prediction models. However, improvements in the forecasting and warning of smaller-scale phenomena (severe thunderstorms, tornadoes, flash floods) have been less dramatic. Continuing scientific advances in the understanding of these phenomena and new capabilities to observe and rapidly process information on these smaller scales (from a few to several hundred miles) permit major advances in weather service to the nation.

Provision of public warnings of severe weather or flash floods id currently accomplished in most cases after actual detection of these events or after a collection of reports of visual sightings, *i.e.*, the current warnings are reactionary. Prediction of small scale violent weather has been very difficult, and lead times for warnings are correspondingly short. Moreover, the existing technological base for weather observations, information processing and communication is obsolete and highly costly to maintain. For example, NWS currently operates the Automation of Field Operations and Services (AFOS) system to process and distribute meteorological data. AFOS can not process radar or satellite imagery, and its communications are saturated to the point that data and products are routinely lost. The existing network of radars is already more than 30 years old. Obtaining some replacement parts is impossible. Failure of existing systems and the resulting absence of critical weather data could result in a major disaster during severe weather conditions.

In its 1980 report, "Technological and Scientific Opportunities for Improved Weather and Hydrological Services in the Coming Decade", the Select Committee on the National Weather Service of the National Research Council (NRC), pointed out scientific and technological opportunities for substantial improvement in the quality and quantity of the nation's weather hydrological services, including the timely warning of hazardous weather flooding. As a result, the Department of Commerce (DOC) began to consider modernization of the National Weather Service (NWS), a major component of the National Oceanic and Atmospheric Administration (NOAA). That modernization involves new observational technology, powerful new information and forecast systems, and an new organizational structure. It promises to provide more accurate and timely predictions of those weather events that have regular and dramatic impact on both private and public activities. In 1987, a study panel of NRC reviewed the status of the development of potential technological components of a modernized NWS and the planning for modernization and the associated restructuring. The report was generally supportive of both the technological developments and DOC's plan for implementation.

In response to DOC's budget proposals to move ahead with the modernization and associated restructuring, the Congress passed and the President signed, Public Law 100–685, Title IV of which set forth guidelines for planning and implementing the NWS modernization and restructuring.

In 1989, NOAA proposed to the NRC that it establish a review committee on the modernization and associated restructuring of NWS to advise NOAA in the (i) implementation of the most cost-effective technical systems and services, and (ii) successful demonstration and acceptance of the modernized and restructured NWS operations. Later that year, NRC established a committee on National Weather Service Modernization of the Commission on Engineering and Technical Systems.

The first report of that Committee, dated March 1991, presented the results

of its work during 1990.[1] In addition to taking a broad overview of the modernization and associated restructuring, the Committee examined selected areas in which near-term decisions by NOAA were contemplated. The Committee will continue to examine the planning and implementation of the NWS modernization and associated restructuring efforts. Additional recommendations of the Committee will be found in subsequent reports to be issued at least annually during its lifetime.

The recommendations of the Committee generally relate to the most cost effective deployment of modern technical systems and, with respect to the closure of field offices, to methods for statistically comparing modernized weather services with those produced by current operations. As the NWS proceeds with modernization, it intends to utilize the advice of the Committee in order to promote user confidence in the quality of its modernize services although, in certain instances, the Committee may advocate activities that would lead to a level of certainty substantially exceeding the basis requirements of Public Law 100–685.

As discussed in greater detail in the section entitled "The Modernization Process", these proposed regulations respond only to the requirements for certification of transition actions (consolidation, automation and relocation) and not to requirements applicable to the closure of a field office, which will not occur until the final stage of modernization. Proposed regulations governing the closure of field offices will be published at a later date, but well before a closure will occur.

The New Technology

The key new observation systems in the NWS modernization are the Next Generation Weather Radar (NEXRAD), the automated Surface Observing System (ASOS), and the Next Generation Geostationary Operational Environmental Satellites (GOES). Other observational systems may contribute significantly to the modernized NWS. Two particularly important ones for forecasting and warning of severe weather events are wind profilers and a network for lightning detection and analysis.

NEXRAD units utilize doppler radar technology to measure the radial wind velocity in severe weather elements such as thunder-storms, to improve estimates of precipitation amounts, and to track storm movement and intensity. The new radars also will allow for earlier detection of the precursors of tornadic activity, thunderstorm development, and other important weather phenomena.

ASOS units will be installed initially at more than 1000 locations in the United States in a cooperative program with the Federal Aviation Administration and the Department of Defense. These units will provide surface weather information on a nearly continuous basis and in a uniform manner. The ASOS network will provide the basic data required for severe weather, flash flood, and river forecasting, as well as for support of aviation operations. This automation will free personnel for other activities and allow future expansion of the observation network at much less cost than presently required with manual observations. ASOS units now are being produced and installed in the field.

Next Generation GOES Satellites (GOES-Next) are currently under development. These satellites will allow atmospheric soundings and cloud images to be obtained simultaneously (only one or the other can be obtained from the current GOES). Both observations will also be of higher quality and resolution. New images can be provided as frequently as every six minutes during severe weather conditions. These advances are very important for improved prediction of severe storms and flash floods.

The Advanced Weather Interactive Processing System (AWIPS) and its associated communications will be the data integrator at each Weather Forecast Office in the fully modernized Weather Service, receiving high-resolution data from the observation systems; centrally collected data, analyses, and guidance products from the National Meteorological Center (NMC) in the National Capital Area; and products from the National Hurricane Center in Miami, Florida, and the National Severe Storms Forecast Center in Kansas City, Missouri. This integrated and continuously updated data base is the source from which all warnings and forecasts issued by the modernized WFO will be prepared. The AWIPS, by providing fast-response interactive data analysis and display, will be the information system used by the meteorologist on duty to prepare warnings and forecasts and to disseminate these products rapidly to the public and other users. AWIPS also will include a new communications systems to support NWS operations.

Advanced super computers at the NMC will improve the accuracy of numerical weather forecasts, particularly at the smaller scales of atmospheric motion. Numerical models of the atmosphere must run on large, high-speed computers to have the spatial resolution and timeliness needed in today's weather forecasting. The requirements for computer-generated guidance products in support of forecasting severe storms are significantly increased over those previously needed. For example, a high-resolution model, with a horizontal resolution of 30 km and improved physics, is now being developed that requires a much larger computer capability than the Class VI computers previously used at the NMC for models with a resolution of 85 km. The first advanced super computer was installed at the NMC in 1990.

Structure of NWS

The main field forecast offices of today's NWS are 52 Weather Service Forecast Offices (WSFOs) whose responsibilities are organized on a geographical basis. In addition, there are about 200 smaller offices, including Weather Service Offices (WSOs) and Weather Service Meteorological Observatories, that take manual weather observations and, in the case of WSOs, issue local area forecasts and warnings based on the products of the WSFOs. Thirteen River Forecast Centers (RFCs), which primarily provide flood warnings and river stage and water supply forecasts, are located to cover the contiguous 48 states and Alaska. Six RFCs are collocated with WSFOs. The hydrologic forecasts and warnings prepared by the RFCs are disseminated by the WSFOs and selected WSOs.

A fundamental change in the structure of the NWS is planned as part of the proposed modernization. There will be 115 Weather Forecast Offices (WFOs) at locations determined primarily by the coverage of NEXRAD systems to be installed nearby. Upon completion of modernization, all the remaining WSOs and Weather Service Meteorological Observatories will be automated. The forecast and warning responsibilities of the WSOs to be closed will be assumed by the appropriate WFOs using the improved observation, information processing, and dissemination systems.

The Modernization Process

Section 407 of Public Law 100–685 directs the Secretary of Commerce

[1] Toward a new National Weather Service—A First Report, National Academy Press, Washington, DC, March 1991. The material in this section and the following section is derived directly from that report.

(Secretary) to prepare and submit to the Congress a 10-year Strategic Plan for the comprehensive modernization of the NWS. In addition, the Secretary must prepare and submit to the Congress a National Implementation Plan setting forth schedules for necessary actions to accomplish the objectives described in the strategic plan. The Implementation Plan is revised annually.

The Secretary submitted the Strategic Plan required by Sec. 407 to the Congress on March 10, 1989, and prepared and submitted the National Implementation Plan on April 23, 1990. The latest revision of the National Implementation Plan covers fiscal year 1992. Copies of the Strategic Plan and the revised Implementation Plan are available at National Weather Service, room 17201, WX21; 1325 East-West Highway; Silver Spring, MD 20910.

As described in these plans, transition to the modernized NWS will progress using an incremental office-by-office approach. Transition to the fully modernized NWS will be accomplished in two stages. The first stage will be characterized by specific improvements in weather detection capability at individual offices generally resulting from the deployment of new observational technologies—NEXRAD and ASOS. As meteorologists at NWS offices gain familiarity with NEXRAD and ASOS technology, develop their interpretive skills and apply these skills to the enhanced observational data, NEXRAD and ASOS will be commissioned on a site-by-site basis and the existing, outmoded technologies decommissioned.

The transition of offices in the first stage of the modernization process will be paced primarily by delivery schedules of the NEXRAD and ASOS systems. The timing of staffing changes and training also will be based on the delivery schedules with the goal of providing the necessary people on site prepared to do the job when the systems are ready for operation. Generally, NEXRAD offices will require additional staff to perform stage 1 operations. To the extent possible, these additional positions will be drawn from field offices not scheduled to receive NEXRAD, without degrading current services. As operations in these field offices are consolidated or automated and staffing is reduced, available positions will be used in the development of NEXRAD offices.

Non-NEXRAD field offices with surface observations and/or local warning programs will not have their staffs reduced below the levels required to carry out their assigned programs. In each stage 1 transition action, *i.e.*, any consolidation, automation, or relocation of field office responsibilities, the National Weather Service Regional Director will ensure that community leaders and affected organizations are kept informed of significant changes, and that warning services and required observations will not be degraded. Weather services must continue without degradation throughout the transition and offices must be fully capable of performing all assigned operations and services.

No WSO or WSFO will be closed during the first stage of modernization. Commissioning of the AWIPS system will commence the operation of the full-function WFO defined in the Strategic Plan, which will permit the closure of field offices as NWS moves toward national implementation of the plan. AWIPS will permit each WFO to perform all required operational activities utilizing the advanced centrally produced guidance products; observational data from both local and adjacent weather offices as well as satellite data; and local meteorological analyses performed with AWIPS, and prepare and disseminate weather services and products sufficient to support the certification requirements for services to the area affected by the closure of the current field offices during stage 2. Although Pub. L. 100–685 does not impose requirements for certifying the closure of an office that exceed the requirements for certification of a transition action, certifications of closures that will occur during stage 2 of the modernization will be made with the benefit of the results of the "multi-station operational demonstration" of sec. 407 testing the performance of all components of the modernization in an integrated manner over a prolonged period. These certifications will also be based upon statistical comparisons of the accuracy of warnings provided by WFOs before and after modernization. The National Weather Service, in close consultation with NRC, is developing the criteria for future stage 2 closure certifications. Additional technology that will become available over the next decade, *e.g.*, new geostationary and polar orbiting meteorological satellites and upgraded super computers for complex numerical modeling will further improve short range warnings and forecasts, and longer term forecasts. Introduction of these technologies will not involve the closing, relocating, consolidating or automating of any field office. Therefore, the introduction or commissioning of these technologies is not subject to the provisions of this sec. 408.

A fuller discussion of NWS's transition philosophy and the time tables for the transition to the modernized weather service are found in the Strategic Plan and the Implementation Plan.

Requirements of Public Law 100–685

Section 407 of Public Law 100–685 was enacted in 1988 to guide NWS's modernization plans. Section 407 focuses on the planning and testing of a national modernized structure. It requires the Secretary to submit an overall strategic plan as well as a national implementation plan. In addition, just before national implementation, which constitutes the second and final stage of modernization, NWS must conduct a "multistation operational demonstration which tests the performance of all components of the modernization in an integrated manner for a sustained period." NWS plans to fulfill this mandate by conducting a Modernization and Associated Restructuring Demonstration (MARD) beginning in late 1995.

Paragraph (b) of sec. 408 of Pub. L. 100–685 provides that the Secretary may not close, consolidate, automate, or relocate any [Weather Service Office or Weather Service Forecast Office] unless the Secretary has certified to the Committee on Commerce, Science, and Transportation of the Senate and the Committee on Science, Space, and Technology of the House of Representatives that such action will not result in any degradation of weather services provided to the affected area. Such certification shall include a detailed comparison of the services provided to the affected area and the services to be provided after such action; any recent or expected modernization of National Weather Service operations which will enhance services in the affected area; and evidence, based upon operational demonstration of modernized National Weather Service operations, which supports the conclusion that no degradation in services will result from such action.

The text and legislative history of sec. 408 offer only limited guidance on the meanings of "close, consolidate, automate or relocate" a Weather Service Office or Weather Service Forecast Office. These proposed regulations define these terms.

Members of Congress most active in passage of sec. 408 expressed what appeared to be a general concern that the Administration would modernize the nation's weather services with an eye on savings and development of

nationwide technology, but would not focus so much on the weather services provided to individual areas. For example, in 1984, Congress passed, but the President vetoed, a provision that would have given the governor of each state standing to obtain judicial review of NWS's modernization activities in his state. See 133 Cong. Rec. H10678 (Nov. 20, 1987). Prior to passage of Public Law 100–685, Congress again expressed concern that local areas would be forgotten. 133 Cong. Rec. H10678 (Nov. 20, 1987); 134 Cong. Rec. S16450 (Aug. 9, 1988); 134 Cong. Rec. H10386 (Oct. 19, 1988).

The legislation and the legislative history indicate that sec. 408 was enacted primarily to assure Congress that even short term decreases in weather services provided to local communities would not occur as the result of modernization. The law requires that the Secretary of Commerce provide assurances through a "certification" to the concerned committees of the House and Senate. The content of the certification includes the three elements listed in sec. 408(b).

The law requires the certification be made before a modernization action occurs. Consequently, the certification need only contain a comparison of the services currently provided against those "to be provided" after the modernization action; recent or expected modernization of operations which will enhance services; and an operational demonstration that supports the conclusion that no degradation in services will result from modernization. The law does not require statistical certitude of "no degradation" at each incremental step. Because an "operational demonstration" is a necessary element under sec. 408, NWS will also conduct an operational demonstration of operations before consolidating, automating or relocating a field office in stage 1. If the transition action involves the commissioning of a NEXRAD or ASOS unit, these operational demonstrations will, in fact, occur before the commissioning of the new technology. These demonstrations are different from, and in addition to, the "multi-station operational demonstration" required by sec. 407 prior to national implementation.

Agency Implementation of the Certification Requirements

With respect to first stage certifications under the proposed regulations, the responsible meteorologist will generate a report containing sufficient information to satisfy the three requirements of sec. 408. The certification recommendation would be reviewed by the Secretary or his designee and submitted to Congress before the consolidation, relocation or automation occurs.

The introduction of new technologies and the resultant changes in operations could raise concerns that the new equipment is at least as accurate and reliable as the old equipment and in the case of NEXRAD, provides at least equal coverage; that the employees operating it are adequately trained both in operations and maintenance; and that the same services continue to be provided to users. These concerns probably prompted the certification requirements of sec. 408 discussed above, and will be addressed during the first stage of the transition primarily through the documentation that accompanies commissioning and decommissioning. That documentation will form much of the basis for certifications during the stage 1 transition that no degradation of services will result from a consolidation, relocation, or automation.

As indicated above, the pivotal events involved in an action requiring certification during the stage 1 transition will be the commissioning of a NEXRAD and/or an ASOS unit and the decommissioning of the obsolete technology. The introduction of these technologies can lead to the consolidation or relocation of some operations from an existing field office to a new NEXRAD office and/or the automation of surface observations at an existing field office. These consolidations, relocations, or automations will allow the NWS to reassign to a modernized office those employees whose responsibilities at the existing field office have been eliminated. These events may also lead to the reassignment of employees whose responsibilities at the existing office have been significantly reduced—if their remaining responsibilities (*e.g.*, taking upper air observations) can be consolidated at a modernized office without degrading services.

Following installation of a NEXRAD or ASOS unit, a brief operational demonstration of the capabilities of the new units in each field setting, a Commissioning Report will be prepared. The first element of the Commissioning Report will consist of the result of the comprehensive engineering and performance tests which are part of the contractual site acceptance of each NEXRAD and ASOS unit. Site acceptance represents the culmination of a long and rigorous development and operational testing program that has (1) proven that the design, and realization of that design in a functioning prototype or reproduction system has met all specifications; and (2) demonstrated performance, reliability, data accuracy and overall superiority of these new technologies on a programmatic basis. Each production system is subjected to both factory and site acceptance tests to ensure it is a complete system, has been properly assembled, and is functionally operable. A brief synopsis of the development and operational testing program for NEXRAD and ASOS is given below:

NEXRAD Testing

Extensive development test and evaluation dating back to 1983 has been performed on the NEXRAD system. These tests were carried out to verify the requirements of the developmental specifications which were written by the contractor in response to the Government's functional specification. The developmental specifications were approved by the Government and set forth detailed requirements for the system. Development test and evaluation tested the numerous requirements in these specifications including software and hardware functionality, human engineering, environmental (temperature and humidity), electromagnetic interference, and maintainability and reliability. Begun in 1986, NEXRAD operational testing has assessed the operational effectiveness, suitability and readiness of the system to perform first at test sites, and subsequently at NWS field offices. A successful Operational Readiness Demonstration was conducted in July 1991 at the Operational Support Facility and WSFO Norman, Oklahoma.

ASOS Testing

The feasibility of deploying an integrated system using an array of sensors to automate the measurement of surface weather elements has been demonstrated since the early 1980s. Both the NWS and the FAA operated prototype ASOS systems in the state of Kansas during 1985 and 1986. Subsequent to the successful completion of the Kansas demonstration, numerous refinements and improvements were made to the ASOS system. Rigorous reproduction and operational testing was then conducted during 1990 and 1991. The operational tests included the comparison of ASOS observations with human observations. The results of these tests were reviewed by an independent three agency Testing Review Board made up of senior level personnel from the NWS, the FAA and

the Navy. In August 1991, this Board concluded that the test results clearly supported continuation of the production phase of the program and that there was a high degree of confidence that ASOS would satisfy agency operational requirements.

The Commissioning Report will also document that the employees are adequately trained and that maintenance support is in place prior to commissioning the new systems. The NWS has developed operational and technical criteria for use in preparing the Commissioning and Decommissioning Reports that will document these events. These criteria are contained in the Commissioning Plans required by Weather Service Operations Manual, chapter A–73.

NWS is also developing criteria for a Confirmation of Services Report which will confirm, by a review of actual operations, that the decommissioning of existing radar units will not degrade services to affected users. The Confirmation of Services Report will document the necessary interaction with all affected users after the new technology has been commissioned to confirm that services have remained intact and accessible.

Thus, as NWS progresses through the first stage of modernization, the actual operational performance of systems such as NEXRAD and ASOS will be demonstrated in a series of local operational demonstrations of modernized operations prior to commissioning. The Confirmation of Services Report, which will occur after commissioning of the NEXRAD or ASOS, but before decommissioning of the obsolete technology, will confirm that weather services in each affected service area will not be degraded as the result of the commissioning of NEXRAD or ASOS. The results of the operational demonstrations and the Confirmation of Services Report, along with other available data, will provide increasing confidence in the Secretary's future certifications. Furthermore, some of the data supporting one certification may form part of the basis for subsequent certifications that are made at other locations so that the pace of stage 1 modernization may well accelerate as experience accumulates and confidence increases.

The following summary of the sequence of events leading to a certification of "no degradation" for a typical transition action following the commissioning of a NEXRAD and the decommissioning of an obsolete radar is provided for illustrative purposes:

(1) Installation and acceptance testing of the NEXRAD unit; (2) Operational demonstration of the NEXRAD unit and technical coordination with users; (3) preparation of the Commissioning Report; (4) commissioning of the NEXRAD unit and its subsequently fully operational use; (5) transfer of service responsibility from a non-NEXRAD field office to the NEXRAD field office without changing staffing levels of the non-NEXRAD office; (6) confirmation that services to users are maintained and preparation of Confirmation of Services Report; (7) preparation of Decommissioning Report; (8) decommissioning of the obsolete radar; (9) certification of "No Degradation", and (10) occurrence of the stage 1 transition action (the personnel action which constitutes the consolidation, relocation or automation).

Several operational demonstrations are currently being conducted. For example, NWS has installed and is conducting an operational demonstration of a NEXRAD unit at Norman, Oklahoma. Thus far, the quality of the data provided by this radar greatly exceeds the quality of the data generated by the existing weather radar at the Will Rogers Airport, Oklahoma City. The Norman NEXRAD will be commissioned as the official radar for its service area once the local operational demonstration of the NEXRAD is successfully completed, *i.e.*, personnel are trained and the system has been operated over an appropriate period to demonstrate performance. The Will Rogers radar will be decommissioned when services for the service area can be confirmed. Prior to draw down of personnel at the Will Rogers field office, the Secretary will certify to the Congress that "no degradation" of weather services will occur in the affected area, as provided in §§ 946.5–946.7 of the proposed regulations.

During the operational demonstration of new observational technologies (NEXRAD and ASOS), observational data will be available from both the NEXRAD and/or ASOS and from the current technology. For example, during the demonstration period of a NEXRAD unit, the responsible meteorologist may use NEXRAD data for operational purposes prior to commissioning of the NEXRAD. That is, relying upon his or her professional judgment and evaluation of the relative quality, accuracy, or type of data provided by the two radars, he or she may decide to use as much or as little of the data from either source as is appropriate to provide the most comprehensive and accurate weather services to the service area. During the operational demonstration, he or she may choose to advise the public when the forecasts or warnings of the office rely (partly or entirely) on NEXRAD data, or may provide weather services without reference to the specific observational technology employed.

Incremental implementation of the Strategic Plan has also involved certain actions of a non-technological nature which fall short of consolidating, relocating, or automating a field office. For example, the field office serving the Chicago, Illinois, area was moved from a building in Rosemont, Illinois, to a building at Lewis University Airport, North of Joliet, Illinois, about 20 miles away in anticipation of the eventual establishment of a Weather Forecast Office at the Lewis University Airport. Similarly, the Washington, DC, WSFO was moved from Camp Springs, MD, to Sterling in the Virginia suburbs of the District of Columbia. The Chicago field office and the Washington, DC, field office each continue at a site within its original service area. No weather services of these field offices were altered by the move. Staffing levels were unaffected. Radar coverage, by the same radar, remained the same in both instances, and no new technology was commissioned. Thus, there could be no valid concern that either move would cause degradation of weather services in the service area. These routine non-technological actions were outside the scope of sec. 408(b), and no certification was made in either case. Prior notification of these actions was provided in the National Implementation Plan.

Similarly, in 1994 NWS contemplates moving the San Francisco Weather Service Forecast office located in Redwood City, California, to Monterey, California, in anticipation of this office becoming a WFO with the eventual installation of a NEXRAD. (The office now has only an electronic feed from a nearby FAA radar). While the distance involved in this move will be more than that in Chicago or Washington, there is no greater likelihood of any effect on weather services. The new office will remain within the same service area and will still provide this area with exactly the same products and services using the same technology (including the feed from the FAA radar) and even the same communications systems. Eventually, one or more consolidations, relocations, or automations may occur as modernization proceeds through stage 1 at this office, and each such transition action will be preceded by an appropriate certification as provided in these regulations.

As NWS continues to implement the first phase of the Strategic Plan, it will begin to consolidate, automate, relocate some field offices in late 1992 or 1993. Prior to undertaking the first of such transition actions, it is appropriate to formally set forth the process NWS will follow for certifying these actions. Proposed rules for certifications of field office closures which will commence during under stage 2, will be published for comment at a later date. NOAA is aware that bills are pending in each house of Congress which contain provisions that would modify the certification requirements of Public Law 100–685. Should these provisions in either bill become effective, NOAA will amend these regulations, either proposed or final as the case may be, to take the modifications into account. Other Actions Associated with the Rulemaking:

A. Classification Under Executive Order 12291

NOAA has concluded that these regulations are not major because they will not result in:

(1) An annual effect on the economy of $100 million or more;

(2) A major increase in costs or prices for consumers, individual industries, Federal, state or local government agencies, or geographic regions; or

(3) Significant adverse effects on competition, employment, investment, productivity, innovation or on the ability of United States-based enterprises to compete with foreign-based enterprises in domestic or export markets.

These proposed regulations establish procedures and criteria for certifying that certain actions to modernize NWS will not result in any degradition of weather services to the affected service area. They will not result in any direct or indirect economic or environmental impacts.

B. Regulatory Flexibility Act Analysis

The regulations set forth procedures certifying "no degradation" of weather services to areas affected by the closure, consolidation, automation or relocation of a field office in the course of modernizing NWS. Since these proposed regulations relate to the internal management of the National Weather Service, notice-and-comment rulemaking is not required. A Regulatory Flexibility Analysis is therefore not required for this Notice of Proposed Rulemaking. These rules do not directly affect "small government jurisdictions" as defined by Public Law 96–354, the Regulatory Flexibility Act.

C. Paperwork Reduction Act of 1980

These regulations will impose no information collection requirements of the type covered by Public Law 96–511, the Paperwork Reduction Act of 1980.

D. E.O. 12612

This rule does not contain policies with sufficient Federalism implications to warrant preparation of a Federalism assessment under Executive Order 12612.

E. National Environmental Policy Act

NOAA has concluded that publication of the proposed rules does not constitute a major Federal action significantly affecting the quality of the human environment. Therefore, an environmental impact statement is not required. A programmatic Environmental Impact Statement (EIS) regarding NEXRAD was prepared in November 1984, and an Environmental Assessment to update the portion of the EIS dealing with the bioeffects of NEXRAD non-ionizing radiation is being prepared.

List of Subjects in 15 CFR Part 946

Administrative practice and procedure, National Weather Service, Weather Service modernization.

Dated: August 31, 1992.

Robert C. Landis,

Acting Assistant Administrator for Weather Service.

Accordingly, it is proposed to amend subchapter C of chapter IX of title 15 of the CFR by adding a new part 946 as follows:

PART 946—MODERNIZATION OF THE NATIONAL WEATHER SERVICE

Sec.

946.1 Purpose.
946.2 Definitions.
946.3 Notification of transition actions.
946.4 Menu of services.
946.5 Preparation of proposed certification for a transition action.
946.6 Review of proposed certification for a transition action.
946.7 Certification of a transition action.
946.8 Certification of the closing of a field office pursuant to modernization.

Authority: 15 U.S.C. 313 note, sec. 407 and 408 of Pub. L. 100–685.

§ 946.1 Purpose.

This part sets forth the procedures for certification by the Secretary of Commerce that the closure, consolidation, automation or relocation of any field office of the National Weather Service pursuant to the implementation of the Strategic Plan for the Modernization of the NWS will not result in any degradation of weather services to the affected area. Section 408 of Pub. L. 100–685 requires that no such field office be closed, consolidated, automated, or relocated until such certification is made.

§ 946.2 Definitions.

Automate (or automation) means a transfer of weather service personnel performing observations from a field office resulting from a technological change in the method of performing observations at that field office.

Close (or closure) means to transfer or reassign all weather services from a field office, but does not include a relocation or a move of a field office to another location within the current service are of that office from with it continues to provide the same weather services to the entire area. Closure of field offices will not occur during stage 1 of the modernization as set forth in the National Implementation Plan submitted to Congress.

Commission means to officially charge a new observational technology (*e.g.*, NEXRAD and ASOS) with responsibility for providing weather data within a defined service area or to charge a new weather office support system (*e.g.*, AWIPS) with responsibility for supporting office operations.

Consolidate (or consolidation) means a transfer or reassignment of weather service personnel from one field office to another field office resulting from a combination of responsibility for providing weather services assigned to two or more field offices.

Decommission means to withdraw existing official responsibility for providing weather data or weather office support from an existing technology.

Degradation of weather services means a decrease in (1) the inventory of the weather services or products provided to users in an affected service area; (2) the timeliness of the delivery of the services or products to users; or (3) the reliability or accuracy of the data on which such services or products depend, including specifically the reliability or accuracy of surface weather observations or of the data provided by existing weather radar coverage at an elevation of 10,000 feet.

Field office means a National Weather Service Office (WSO) or a National Weather Service Forecast Office (WSFO).

Inventory of services means all of those weather services listed on the menu of services that are provided to the public by a field office in its service area prior to a transition action.

Menu of services means all of the weather services currently provided by the National Weather Service and listed in § 946.4.

National Implementation Plan means the plan submitted to Congress on April 23, 1990, and each revision of that plan submitted to Congress as required by sec. 407(c) of Public Law 100–685.

Regional Director means the Director of one of the six geographical regions of the National Weather Service.

Relocate (or Relocation) means a transfer or reassignment of weather service personnel resulting from (1) a move of a field office to a location outside the current service area of that field office, or (2) a move of a field office within its service area to a location from which it will be unable to continue to provide weather services to the entire area.

Responsible meteorologist means an employee of the NWS in charge of the office that will be responsible for providing weather services to the area affected by a closure, consolidation, automation or relocation of a field office.

Secretary means the Secretary of Commerce or his or her delegate.

Service area means the geographical area for which an existing field office provides weather services.

Strategic plan means the 10-year strategic plan for the modernization of NWS which was submitted to the Congress by the Secretary on March 10, 1989.

Transition action means the consolidation, automation, or relocation of a field office pursuant to an incremental step in stage 1 of the National Implementation Plan.

Weather service means a service or product provided to a service area by a field office.

§ 946.3 Notification of transition actions.

(a) The National Implementation Plan shall be revised annually and submitted to Congress.

(b) To promote the orderly process for the incremental transition to the modernized National Weather Service, no transition action may be taken by the National Weather Service unless such action has been included in the schedule of necessary actions contained in the most current revision of the National Implementation Plan submitted to the Congress and all requirements of §§ 946.5 through 946.7 of this part have been complied with.

§ 946.4 Menu of services.

Surface Observations
Upper Air Observations
Radar Observations
Public Forecasts and Warnings
Aviation Forecasts and Warnings
Marine Forecasts and Warnings
Hydrologic Forecasts and Warnings
Fire Weather Forecasts and Warnings
Agricultural Forecasts and Advisories
NOAA Weather Radio
Climatological Services
Emergency Management Support
Special Products and Service Programs

§ 946.5 Preparation of proposed certification for a transition action.

(a) Whenever it becomes appropriate to take a transition action listed in the Implementation Plan, but prior to taking such action, the responsible meteorologist shall prepare a proposed certification that there will be no degradation of weather services to the affected areas. The proposed certification may address all related transition actions that occur as part of a coordinated step described in the Implementation Plan.

(b) The proposed certification shall include (1) A comparison of the services provided to the affected area prior to such action and the services to be provided after such action; (2) Any recent or expected modernization of National Weather Service operations which will enhance services to the affected area (3) Evidence based upon an operational demonstration of modernized National Weather Service operations which supports a determination that no degradation in office operations and resultant services will result from such action.

(c) For any proposed certification, the responsible meteorologist shall prepare (1) A current inventory of services for the relevant field office; (2) A detailed list of weather services which will be provided to the affected area after the transition action is completed; and (3) A confirmation of services report including a list of those users contacted during the confirmation process to ensure that services will not be degraded, including specifically the appropriate Federal Aviation Administration official if the transition action involves a field office located at an airport.

(d) If the transition action proposed to be certified involves the commissioning of a NEXRAD or ASOS unit, the responsible meteorologist shall include with the certification the Commissioning Report, and any other documentation necessary to demonstrate that:

(1) An engineering basis exists for concluding that any new technology involved will perform to the Government's specifications, which reflects the state-of-the-art and exceeds the specification for the technology being replaced;

(2) The technology has been tested on site and performs reliably;

(3) The new system will satisfactorily support field office operations;

(4) Sufficient staff with adequate training are available to operate and maintain the system and that any other necessary maintenance support is in place.

(e) If the transition action also involves the decommissioning of a radar unit the responsible meteorologist shall also include a Decommissioning Report demonstrating that the technology being decommissioned is no longer needed to support office operations.

(f) The responsible meteorologist shall transmit the proposed certification and the accompanying documentation to the Regional Director of the NWS.

§ 946.6 Review of proposed certification for a transition action.

The Regional Director shall review the proposed certification and the accompanying documentation submitted as provided in § 946.5. The Regional Director may amend or supplement the documentation provided subsequent readers can easily identify his or her amendments or supplements. If the Regional Director agrees with the proposed certification, he or she shall endorse the proposed certification, and transmit it along with all the accompanying documentation to the Secretary.

§ 946.7 Certification of a transition action.

(a) If the Secretary agrees that the proposed transition action will not result in any degradation of weather services provided to the affected areas, he or she shall so certify to the Committee on Science, Space, and Technology of the House of Representatives and to the Committee on Commerce Science and Transportation of the Senate. Upon transmittal of the certification by the Secretary, NWS shall promptly publish the certification in the **Federal Register** stating where copies of the certification and the accompanying documents may be obtained.

(b) The responsible meteorologist may take a transition action only after the certification has been submitted to Congress.

(c) Any field office for which a transition action is certified under this section shall also be subject to additional certification in accordance with the criteria of § 946.8 if that office is closed during stage 2 of the modernization.

§ 946.8 Certification of the closing of a field office pursuant to modernization. [Reserved]

[FR Doc. 92-21378 Filed 9-4-92; 8:45 am]
BILLING CODE 3510-12-M

DEPARTMENT OF THE TREASURY

Bureau of Alcohol, Tobacco and Firearms

27 CFR Parts 4 and 5

[Notice No. 750; Ref: Notice Nos. 710, 727, 732]

RIN 1512-AA87

Definition of "Brand Label" for Wine, and; Standard Wine and Distilled Spirits Containers (91F006P and 90F275P)

AGENCY: Bureau of Alcohol, Tobacco and Firearms (ATF), Department of the Treasury.

ACTION: Withdrawal of standard wine and distilled spirits containers issue from notice of proposed rulemaking.

SUMMARY: The Bureau of Alcohol, Tobacco and Firearms (ATF) is issuing this notice of withdrawal to inform interested persons that it is not pursuing rulemaking regarding standard wine and distilled spirits containers, as proposed in Notice No. 727. ATF's remaining proposal in Notice No. 727 concerning an amended definition of "brand label" for wine will be addressed in a forthcoming document.

FOR FURTHER INFORMATION CONTACT: James P. Ficaretta, Wine and Beer Branch, Bureau of Alcohol, Tobacco and Firearms, 650 Massachusetts Avenue NW., Washington, DC 20091 (202-927-8230).

SUPPLEMENTARY INFORMATION:

Background

On September 12, 1991, ATF published Notice No. 727 in the **Federal Register** (56 FR 46393) proposing to amend the definition of "brand label" in 27 CFR 4.10 for wine containers. In addition, the Bureau amended its earlier proposal regarding standard wine containers, as set forth in Notice No. 710 (February 6, 1991; 56 FR 4770), and proposed an amendment to the regulations concerning the design of standard liquor bottles in 27 CFR 5.46.

As amended, ATF proposed that standard wine and distilled spirits containers should be so made and formed as not to mislead the purchaser. Wine and distilled spirits containers would be held (irrespective of the information contained on the label) to be likely to mislead the purchaser if the Director determined that the size, shape, or composition of the container (e.g., glass, metal, plastic, etc.), when considered in conjunction with the placement of the label, were likely to mislead the purchaser as to the identity or alcoholic content of the product.

A container found to be in violation of the regulation would not have to be removed from the marketplace and redesigned. Rather, wine or distilled spirits could not be bottled in such a container unless the product was labeled with an additional statement which the Director found to be sufficient to dispel any misleading impression as to the product's identity or alcoholic content. The Director could require such a statement to be placed on a principal display panel other than a neck label or a shoulder wrap.

The comment period for Notice No. 727, initially scheduled to close on December 11, 1991, was subsequently extended until January 10, 1992 (Notice No. 732, December 11, 1991; 56 FR 64584).

Analysis of Comments

ATF received 22 comments in response to Notice No. 727. Of those, 12 commenters addressed the amended proposal regarding standard wine and distilled spirits containers.

Several commenters believed that the proposed regulation did not go far enough. These commenters reiterated their earlier concern regarding the exclusion of malt beverages from the proposed regulations. They also suggested that in determining the acceptability of a wine or distilled spirits container the color of the bottle as well as the color of the contents should be considered. Furthermore, they suggested that once final regulations have been implemented, containers found by the Director to be misleading should be removed from the marketplace, rather than labeled with some additional statement.

Many other commenters expressed opposition to the Bureau's amended proposal. These commenters, representing both domestic and foreign industry, shared ATF's concern regarding deceptive packaging of alcoholic beverages. However, they still believed that the amended proposal would have a negative impact on the industry by placing at risk investments made by suppliers, wholesalers, and retailers.

These commenters also maintained that, as in the case of the Bureau's earlier proposed regulation, the amended proposal would have a detrimental effect on innovation in the marketplace. As one commenter stated, "* * * the proposed rule would stifle innovation and hinder competition by deterring the development of container designs by new and existing members of the industry."

Furthermore, in its amended proposal the Bureau stated that a container found to be in violation of the regulation would not have to be removed from the marketplace and redesigned. Rather, wine or distilled spirits could not be bottled in such a container unless the product was labeled with an additional statement that dispelled any misleading impression as to the product's identity or alcoholic content. Some commenters expressed their concern with this proposal. As one commenter noted,

> Substantial effort and cost is expended in devising and testing the packaging for the product and introducing the product into the marketplace. Consequently, the 'option' of relabeling a product, * * * with an additional label that the Director deems satisfactory is not necessarily a commercially acceptable alternative.

In addition to the above, other commenters questioned the necessity of amending the regulations.

Decision

After careful consideration of the comments received in response to Notice No. 727, ATF believes that the issue of deceptive alcoholic beverage packaging needs to be studied further. Many of the commenters, including those representing both consumers and industry members, raised valid concerns which the Bureau believes should be addressed before proceeding with further rulemaking.

In light of the comments received, ATF is at this time terminating further rulemaking concerning standard wine and distilled spirits containers as proposed in Notice No. 727. However, the Bureau will explore and consider alternative labeling proposals which address deceptive alcoholic beverage packaging, taking into consideration the comments received in response to Notice No. 727. The remaining issue discussed in Notice No. 727, an amended definition of "brand label" for wine, will be addressed in a forthcoming document.

Drafting Information

The principal author of this document is James P. Ficaretta, Wine and Beer Branch, Bureau of Alcohol, Tobacco and Firearms.

Authority and Issuance

This document is issued under the authority in 27 U.S.C. 205.

Signed: May 29, 1992.
Stephen E. Higgins,
Director.
Approved: June 29, 1992.
Peter K. Nunez,
Assistant Secretary (Enforcement).
[FR Doc. 92-21362 Filed 9-4-92; 8:45 am]
BILLING CODE 4810-31-M

27 CFR Part 250

[Notice No. 751]

RIN 1512-AA69

Liquors and Articles From Puerto Rico and the Virgin Islands

AGENCY: Bureau of Alcohol, Tobacco and Firearms (ATF), Department of the Treasury.

ACTION: Advance notice of proposed rulemaking.

SUMMARY: ATF is considering the revision and recodification of the regulations regarding liquors and articles (hereinafter "alcoholic products") which are brought into the United States from Puerto Rico or the Virgin Islands. The purpose of the proposed revision/recodification is to update and simplify the regulations in 27 CFR part 250 and to reissue those regulations as part of the same chapter. ATF is issuing this advance notice to solicit comments on its proposal to eliminate application and transaction forms required to be submitted by persons who bring alcoholic products into the United States from Puerto Rico.

Comments are also being solicited on proposals to coordinate with the U.S. Customs Service to reduce duplicate efforts involving shipments of merchandise from Puerto Rico to the United States. ATF would also like to receive comments regarding other suggestions for reducing or eliminating unnecessary regulatory burdens on proprietors in both Puerto Rico and the U.S. while continuing to provide adequate protection to the revenue.

DATES: Written comments must be received on or before October 8, 1992.

ADDRESSES: Comments must be submitted to the Revenue Programs Division, Bureau of Alcohol, Tobacco and Firearms, P.O. Box 50221, Washington, DC 20091-0221. ATTN: Notice No. 751.

FOR FURTHER INFORMATION CONTACT: Gail Hosey, Distilled Spirits and Tobacco Branch, Bureau of Alcohol, Tobacco and Firearms, Washington, DC 20226, telephone (202) 927-8210.

SUPPLEMENTARY INFORMATION:

Background

Pursuant to section 7652 of the Internal Revenue Code of 1986, alcoholic products of Puerto Rican manufacture which are brought into the United States for consumption or sale, and alcoholic products coming into the United States from the Virgin Islands, are subject to a tax equal to the tax imposed on similar products of domestic manufacture.

Under section 5232, distilled spirits brought into the United States in bulk containers from Puerto Rico or the Virgin Islands may be withdrawn from Customs custody and transferred to the bond premises of a distilled spirits plant without payment of tax.

ATF wishes to solicit comments on its proposal to review, update, and reissue the regulations pertaining to shipments of alcoholic products from Puerto Rico or the Virgin Islands to the United States. AFT plans to recodify and reissue the regulations now in 27 CFR part 250 as part 26 of the same chapter.

ATF would like to reorganize the regulations to eliminate often lengthy duplication of requirements that apply equally to operations in Puerto Rico and the Virgin Islands. We are considering deleting many regulatory requirements which may be unnecessary.

In updating the regulations, primary emphasis will be given to the simplification of procedures for the taxpayment and shipment of alcoholic products from Puerto Rico to the United States. ATF is also considering proposals to coordinate with the U.S. Customs Service to reduce duplicate efforts at the port of arrival in the United States when such products are shipped from Puerto Rico; however, the responsibilities of Customs with respect to shipments from the Virgin Islands would remain unchanged.

Under current regulations, before distilled spirits, wine or beer may be shipped from Puerto Rico to the United States, an application on ATF Form 5110.51, Application, Permit, and Report—Distilled Spirits Products (Puerto Rico), or 5100.21 (2900), Application, Permit and Report—Wine and Beer (Puerto Rico), must be submitted and a permit received to verify computation of the internal revenue tax. After tax determination, a second application and permit on ATF Form 487-B (5170.7). Application and Permit to Ship Liquors and Articles of Puerto Rican Manufactured Taxpaid to the United States, is required in order to ship the taxpaid or tax determined products to the United States.

ATF is considering ways to reduce paperwork and simplify the procedures for shipping distilled spirits, beer or wine from Puerto Rico to the United States. We would like to solicit comments on the following proposals:

(1) Should the regulations be amended to permit the proprietor of qualified premises in Puerto Rico to maintain a record of tax determination in lieu of the application and permit to compute the tax? ATF is proposing that, in lieu of the initial application and permit currently required to compute the tax, a record of tax determination be kept by the proprietor containing sufficient information to allow an ATF officer to verify the tax liability represented by the document.

(2) Should the regulations be amended to allow such record of tax determination to be an invoice, bill of lading, or other commercial document which would contain the necessary data elements?

(3) If ATF adopts the above proposals, what additional safeguards to the revenue would be necessary?

(4) Do the current provisions in part 250 adequately address the bulk shipment of distilled spirits from Puerto Rico to the United States? ATF is interested in whether or not the regulations reflect the current technology in this area.

(5) Finally, ATF would like to solicit general comments on ways in which it could reduce paperwork, simplify existing procedures and eliminate unnecessary regulations in any area currently covered in part 250, while continuing to maintain adequate safeguards to the revenue.

Public Participation

ATF requests comments from all interested persons. All comments received on or before the closing date will be carefully considered. Comments received after the closing date will be given the same consideration if it is practical to do so, but assurance of consideration cannot be given except as to comments received on or before the closing date.

ATF will not recognize any material or comments as confidential. All comments submitted in response to this notice will be available for public inspection during normal business hours at: ATF Public Reading Room, room 6480, 650 Massachusetts Avenue NW., Washington, DC. Any material that the commenter considers confidential or inappropriate for disclosure to the public should not be included in the comment. The name of the person submitting a comment is not exempt from disclosure.

Drafting Information

The principal authors of this document are Dick Langford and Gail Hosey of the Distilled Spirits and Tobacco Branch, Bureau of Alcohol, Tobacco and Firearms.

List of Subjects in 27 CFR Part 250

Administrative practice and procedure, Alcohol and alcoholic beverages, Authority delegations, Beer, Customs duties and inspection, Electronic fund transfers, Excise taxes, Liquors, Packaging and containers, Puerto Rico, Reporting and recordkeeping requirements, Surety bonds, Transportation, Virgin Islands, Warehouses, Wine.

Authority: This advance notice of proposed rulemaking is issued under the authority in 26 U.S.C. 7805.

Signed: August 21, 1992.

Stephen E. Higgins,

Director.

Approved: August 26, 1992.

Peter K. Nunez,

Assistant Secretary (Enforcement).

[FR Doc. 92-21363 Filed 9-4-92; 8:45 am]

BILLING CODE 4810-31-M

---

27 CFR Part 251

[Notice No. 753]

RIN 1512-AA72

Importation of Distilled Spirits, Wine and Beer

AGENCY: Bureau of Alcohol, Tobacco and Firearms (ATF), Department of the Treasury.

ACTION: Advance notice of proposed rulemaking.

SUMMARY: ATF is proposing to revise and recodify the regulations pertaining to the importation of distilled spirits, wine and beer. The purpose of this revision/recodification is to update and simplify the regulations prior to their being reissued. ATF is issuing this advance notice to incorporate into the importation regulations various rulings, to also authorize specific metric quantities that may be imported free of internal revenue tax as commercial samples for use in soliciting orders for foreign products and to include in these regulations the alcoholic beverage health warning labeling requirements. ATF would also like to receive any other comments relating to the importation of distilled spirits, wine and beer regulations that would help reduce or eliminate unnecessary burdens on industry members while continuing to provide adequate protection of the revenue.

DATES: Written comments must be received on or before October 8, 1992.

ADDRESSES: Send written comments to: Chief, Distilled Spirits and Tobacco Branch, Revenue Programs Division, Bureau of Alcohol, Tobacco and Firearms, P.O. Box 50221, Washington, DC 20091-0221. Attn: Notice No. 753.

FOR FURTHER INFORMATION CONTACT: Edward A. Reisman, Distilled Spirits and Tobacco Branch, Bureau of Alcohol, Tobacco and Firearms, 650 Massachusetts Ave., NW., Washington, Dc 20226, telephone (202-927-8210).

SUPPLEMENTARY INFORMATION:

Background

ATF wishes to solicit comments on its proposal to review, update, and reissue the importation of distilled spirits, wine and beer regulations. The importation regulations now found in 27 CFR part 251 will be revised and recodified as part 27 of the same chapter.

Restrictive regulations will be eliminated and where possible rulings will be incorporated into the recodified importation regulations. ATF would like to solicit comments on the following proposals:

Incorporate ATF and IRS Rulings into the Importation Regulations

The importation regulations would make obsolete ATF Ruling 77-33, 1977 ATF C.B. 179, with pertinent parts of that ruling appearing in the recodified importation regulations. This ruling held that alcohol may be issued to increase the alcohol content in wine provided such use of alcohol is an authorized procedure and a standard winemaking process in the country of origin. Wine produced in this manner which is imported into the United States will be taxed as a wine, so long as the alcoholic content of that wine does not exceed 24 percent by volume.

ATF Ruling 84-3, ATF Q.B. 1984-4, 71, relating to the use of certificates of label approval (COLA) (ATF Form 5100.31) by a person other than the owner, will be declared obsolete, with pertinent parts of this ruling appearing in proposed regulations.

Also, Revenue Ruling 56-579, C.B. 1956-2, 1031, will be declared obsolete, with pertinent parts of that ruling appearing in proposed regulations. The ruling held that distilled spirits withdrawn from customs bond solely for the use of foreign embassy personnel, the foreign diplomatic corps, or members of the armed services of foreign countries on active duty in the United States are not subject to labeling and liquor bottle regulations.

Additionally, ATF is interested in comments whether the procedures contained in these rulings should be revised as part of recodifying these rulings into the regulations. Particular comments are sought on the experiences of importers using the procedure allowing one importer to use a COLA owned by another importer.

Commercial Samples

The importation regulations on the quantity of distilled spirits, wine or beer which may be imported free of internal revenue tax for use as samples in soliciting orders for foreign products would be changed from fluid ounces to metric quantities, to agree with the treatment of such products in the Harmonized Tariff Schedule of the United States (HTSUS).

Alcoholic Beverage Health Warning Statement

The importation regulations would also contain specific information about the health warning labeling requirements for alcoholic beverages now required in 27 CFR, Part 16, titled, health Warning Statement Requirements for Alcoholic Beverages. The regulations require that a health warning statement appear on the labels of all containers of alcoholic beverages sold or distributed. Sale and distribution of alcoholic beverages also includes samples or other distribution not for sale.

Other Matters

ATF would like to solicit general comments on ways in which it could reduce paperwork, simplify existing procedures and eliminate unnecessary regulations in any area currently covered in part 251, while continuing to maintain adequate safeguards to the revenue.

Additionally, ATF wishes to solicit particular comments on the following issues:

1. Do the current provisions of the importation regulations adequately address the bulk importation of distilled spirits, wine and beer? ATF is interested in whether or not the regulations reflect the current technology in this area.

2. Wine under the Internal Revenue Code of 1986 includes such products containing not less then one-half of one percent alcohol by volume whereas under the Federal Alcohol Administration Act wine is defined to exclude such products containing less than 7 percent alcohol. Similarly, under the Internal Revenue Code the definition of beer excludes a product containing

less than one-half of one percent alcohol by volume while under the Federal Alcohol Administration Act the term malt beverage includes such products which contain alcohol in an amount of less than one-half of one percent percent. ATF is soliciting comments on whether the importation regulations which apply to wine and beer or malt beverages sufficiently address these definitional distinctions or whether there exist areas in the current regulations which are confusing on this point.

Public Participation—Written Comments

ATF requests written comments or suggestions concerning these proposal from all interested persons. As stated, ATF also requests written comments or suggestions regarding any other aspects relating to the importation of distilled spirits, wine and beer regulations. All written comments received on or before the closing date will be carefully considered. Comments received after that date will be given the same consideration if it is practical to do so, but assurance of consideration cannot be given except as to comments received on or before the closing date.

ATF will not recognize any material in the comments as confidential. Comments may be disclosed to the public. Any material which the commenter considers to be confidential or inappropriate for disclosure should not be included in the comment. The name of the person submitting the comment is not exempt from disclosure.

During the comment period, any person may request an opportunity to present oral testimony at a public hearing. However, the Director reserves the right, in light of all circumstances, to determine if a public hearing will be held.

Drafting Information

The principal author of this document is Edward A. Reisman, Distilled Spirits and Tobacco Branch, Bureau of Alcohol, Tobacco and Firearms.

List of Subjects in 27 CFR Part 251

Administrative practice and procedure, Alcohol and alcoholic beverages, Authority delegations (Government agencies), Beer, Cosmetics, Customs duties and inspection, Excise taxes, Imports, Labeling, Liquors, Packaging and containers, Perfume, Reporting and recordkeeping requirements, Transportation, Wine.

Authority

This advance notice of proposed rulemaking is issued under the authority in 26 U.S.C. 7805.

Signed: August 14, 1992.

Stephen E. Higgins,

Director.

Approved: August 26, 1992.

Peter K. Nunez,

Assistant Secretary (Enforcement).

[FR Doc. 92–21390 Filed 9–4–92; 8:45 am]

BILLING CODE 4810–31–M

---

27 CFR Part 252

[Notice No. 752]

RIN 1512–AA98

Exportation of Distilled Spirits, Wine, Beer, Beer Concentrate, and Specially Denatured Spirits

AGENCY: Bureau of Alcohol, Tobacco and Firearms (ATF), Department of the Treasury.

ACTION: Advance notice of proposed rulemaking.

SUMMARY: ATF is considering the revision and recodification of the regulations pertaining to the exportation of distilled spirits, wine, beer, beer concentrate, and specially denatured spirits. The purpose of the proposed revision/recodification is to update and simplify the export regulations now in 27 CFR part 252 and to reissue those regulations as part 28 of the same chapter. ATF is issuing this advance notice to solicit comments on its proposal to eliminate application and transaction forms required to be submitted by persons who withdraw such products without payment of tax, simplify the procedures for claiming export drawback, and coordinate with the U.S. Customs Services to reduce duplicate efforts involving exportations.

ATF would also like to receive comments regarding other suggestions for reducing or eliminating unnecessary regulatory burdens on industry members while continuing to provide adequate protection to the revenue.

DATES: Written comments must be received on or before October 8, 1992.

ADDRESSES: Comments must be submitted to the Revenue Programs Division, Bureau of Alcohol, Tobacco and Firearms, P.O. Box 50221, Washington, DC 20091–0221 ATTN: Notice No. 752.

FOR FURTHER INFORMATION CONTACT: Gail Hosey or Dick Langford, Distilled Spirits and Tobacco Branch, Bureau of Alcohol, Tobacco and Firearms, Washington, DC 20226, telephone (202) 927–8210.

SUPPLEMENTARY INFORMATION: .

Background

ATF wishes to solicit comments on its proposal to review, update, and reissue the regulations pertaining to the exportation of distilled spirits, wine, beer, beer concentrate, and specially denatured spirits. ATF plans to recodify and reissue the exportation regulations now in 27 CFR part 252 as part 28 of the same chapter. ATF wishes to reorganize the regulations to eliminate often lengthy duplication of requirements that apply equally to exportations of distilled spirits, wine, beer, beer concertrate, and specially denatured spirits.

We are considering deleting many regulatory requirements which may be unnecessary.

In updating the regulations, primary emphasis will be given to the simplification of procedures for the withdrawal of spirits, wine, beer, beer concentrate, and specially denatured spirits for exportation without payment of tax and for their withdrawal and exportation with benefit of drawback of tax. ATF is also considering proposals to coordinate with the U.S. Customs Service to reduce duplicate efforts at the port of exportation in the United States when such products are exported. The Bureau would like to solicit comments on the following proposals.

Withdrawals Without Payment of Tax or Free of Tax

Under the provisions of sections 5214, 5066, and 5362 of the Internal Revenue Code of 1986, distilled spirits and wine may be withdrawn without payment of tax for exportation, deposit in a foreign trade zone for exportation or storage pending exportation, transfer to a customs bonded warehouse for exportation, transfer to a customs bonded warehouse for taxfree withdrawal and use by eligible diplomatic personnel, or lading for use as supplies on certain vessels and aircraft. Under current regulations, an application or notice must be submitted for each withdrawal on ATF Form 5100.11.

Pursuant to the provisions of section 5053, a brewer may withdraw beer from brewery premises without payment of tax for exportation, lading for use as supplies on certain vessels and aircraft, or deposit in a foreign trade zone for exportation or storage pending exportation. The brewer may also withdraw beer concentrate without payment of tax for exportation or for deposit in a foreign trade zone. Under current regulations, the brewer must file a notice of withdrawal on ATF Form

1689 (5130.12) when withdrawing the beer or beer concentrate.

ATF is considering ways to reduce paperwork and simplify the procedures for the exportation of distilled spirits, wine and beer by the proprietors of distilled spirits plants, bonded wineries, and breweries. We would like to solicit comments on the following proposals:

(1) Should the regulations be amended to allow the proprietors of distilled spirits plants and bonded wine cellars to withdraw spirits and wine, respectively, pursuant to a continuing application, instead of having to file a notice of exportation on ATF Form 5100.11 for each withdrawal?

(2) Should the regulations be amended to eliminate the requirement that the proprietor of a distilled spirits plant file a notice on ATF Form 5100.11 for the withdrawal of specially denatured spirits free of tax for exportation or for deposit in a foreign trade zone? Instead, such withdrawals would be covered by the continuing application filed by the distilled spirits plant proprietor.

(3) Should ATF amend the regulations to eliminate the requirement that the brewer file a notice of withdrawal on ATF Form 1689 (5130.12) when withdrawing beer or beer concentrate for exportation?

(4) If ATF adopts the above proposals, what additional safeguards to the revenue would be necessary? Would it suffice to require the proprietor of a distilled spirits plant, bonded wine cellar, or brewery, as the case may be, to prepare a record of withdrawal for each exportation? The record of withdrawal could be in invoice, bill of lading, or other document which contained all the necessary information. A copy of the record would be maintained on file by the proprietor. In addition, the proprietor would be required to maintain a monthly export summary account of withdrawals to record the withdrawals and subsequent receipt of proof of exportation. Proprietors of distilled spirits plants, bonded wine cellars, and breweries would submit a copy of the account each month at the time monthly operational reports are submitted.

(5) The current regulations require exporters to submit proof of exportation to the regional director (compliance) so that the exporter's bond may be relieved of liability for spirits, wine, or beer withdrawn without payment of tax. Should the regulations be amended to eliminate this requirement for proprietors of a distilled spirits plant, bonded wine cellar, or brewery? These proprietors would instead be required to maintain such proof of exportation at their business premises, available for inspection by ATF officers.

(6) Should ATF amend the regulations to allow a dealer in specially denatured spirits to withdraw such spirits free of tax for exportation or deposit in a foreign trade zone? If so, what safeguards must be enacted to protect the revenue? Should such authorization be limited to dealers who have (a) obtained a permit under part 20; (b) filed a bond under part 20; and (c) filed a consent of surety?

Export Drawback

Pursuant to the provisions of section 5062 of the Internal Revenue Code of 1986, when taxpaid distilled spirits which have been manufactured, produced, bottled, or packaged in the United States and marked especially for export are exported, laden for use as supplies on qualified vessels or aircraft, deposited in a foreign trade zone for exportation or storage pending exportation, or deposited in a customs bonded warehouse for taxfree withdrawal and use by accredited foreign diplomatic personnel, the bottler or packager of the spirits may claim drawback of the taxes paid.

When taxpaid wine which has been manufactured, produced, bottled, or packaged in the United States is exported, laden for use as supplies on qualified vessels or aircraft, or deposited in a foreign trade zone for exportation or storage pending exportation, drawback of tax may be claimed by the proprietor of the bonded wine cellar, taxpaid wine bottling house, or wholesale liquor dealer who withdrew the wine. Pursuant to the provisions of section 5055, drawback of taxes paid on beer which has been brewed or produced in the United States may only be claimed by the brewer if such beer is exported, laden for use as supplies on certain vessels or aircraft, or deposited in a foreign trade zone for exportation on for storage pending exportation.

Current regulations in part 252 require that, at the time of withdrawal, the exporter of taxpaid spirits, wine, or beer, must file a notice of shipment of exportation on ATF Form 5110.30, 1582–A (5120.24) or 1582–B (5130.6), respectively, with the district director of Customs at the port from which exported, laden, or deposited. The exporter is then required to submit the form, with claim information and attachments as required, to the regional director (compliance) as the claim for drawback. Upon receipt of a copy of the form upon which the district director of Customs has certified exportation, the regional director (compliance) may approve the claim.

ATF is considering ways to streamline this process, and to coordinate with Customs to reduce duplicate involvement in this procedure. ATF believes that it may be preferable to rely on commercial documentation rather than requiring Customs to certify exportation. ATF would like to solicit comments on the following proposals:

(1) Should the regulations be amended to eliminate the use of ATF Forms 5110.30, 1582–A (5120.24), and 1582–B (5130.6), and to instead require claims for drawback to be filed on ATF Form 2635 (5620.8), "Claim—Alcohol, Tobacco, and Firearms Taxes," along with appropriate proof of exportation?

Under this proposal, Customs certification of exportation would no longer be necessary, and commercial documents appropriate to the particular exportation transaction would serve as sufficient evidence upon which claims for drawback could be based.

(2) What types of commercial documentation would provide sufficient evidence upon which to base drawback claims? For example, ATF is considering amending the regulations to require a permittee who exported distilled spirits, wine, or beer to obtain an export bill of lading or a landing certificate from an official of the foreign government to document the exportation. The deposit of distilled spirits in a customs bonded warehouse or a foreign trade zone would be documented by a certificate of receipt executed by the proprietor or operator thereof. When spirits, wine, or beer are laden for use as supplies on vessels or aircraft, a copy of the transportation bill of lading and a certificate of receipt by the vessel or aircraft would provide satisfactory evidence of exportation.

Finally, ATF would like to solicit general comments on ways in which it could reduce paperwork, simplify procedures, and eliminate unnecessary regulations in this area, while continuing to maintain adequate safeguards to the revenue.

Public Participation

ATF requests comments from all interested persons. All comments received on or before the closing date will be carefully considered. Comments received after the closing date will be given the same consideration if it is practical to do so, but assurance of consideration cannot be given except as to comments received on or before the closing date.

ATF will not recognize any material or comments as confidential. All

comments submitted in response to this notice will be available for public inspection during normal business hours at: ATF Public Reading Room, room 6480, 650 Massachusetts Avenue NW., Washington, DC. Any material that the commenter considers confidential or inappropriate for disclosure to the public should not be included in the comment. The name of the person submitting a comment is not exempt from disclosure.

Drafting Information

The principal authors of this document are Dick Langford and Gail Hosey of the Distilled Spirits and Tobacco Branch, Bureau of Alcohol, Tobacco and Firearms.

List of Subjects in 27 CFR Part 252

Aircraft, Alcohol and alcoholic beverages, Armed Forces, Authority delegations (Government agencies), Beer, Claims, Excise taxes, Exports, Fishing vessels, Foreign trade zones, Labeling, Liquors, Packaging and containers, Reporting and recordkeeping requirements, Surety bonds, Vessels, Warehouses, Wine.

Authority: This advance notice of proposed rulemaking is issued under the authority in 26 U.S.C. 7805.

Signed: August 7, 1992.

Stephen E. Higgins,

Director.

Approved: August 26, 1992.

Peter K. Nunez,

Assistant Secretary (Enforcement).

[FR Doc. 92-21364 Filed 9-4-92; 8:45 am]

BILLING CODE 4810-31-M

---

27 CFR Part 290

[Notice No. 754]

RIN 1512-AA03

Revision of Regulations on Exportation of Tobacco Products and Cigarette Papers and Tubes, Without Payment of Tax, or With Drawback of Tax

AGENCY: Bureau of Alcohol, Tobacco and Firearms (AFT), Department of the Treasury.

ACTION: Advance notice of proposed rulemaking.

SUMMARY: ATF is proposing to revise and recodify the regulations pertaining to the exportation of tobacco products and cigarette papers and tubes. The purpose of the proposed revision and recodification is to update and simplify the regulations prior to their being reissued. ATF is issuing this advance notice to solicit comments on ways in which the exportation regulations can be simplified so as to reduce or eliminate unnecessary regulatory burdens on industry members while continuing to provide adequate protection of the revenue.

DATES: Written comments must be received on or before October 8, 1992.

ADDRESSES: Comments must be submitted to the Chief, Distilled Spirits and Tobacco Branch, Bureau of Alcohol, Tobacco and Firearms, P.O. Box 50221, Washington, DC 20091-0221. [Attn: Notice No. 754]

FOR FURTHER INFORMATION CONTACT: Mary A. Wood, Distilled Spirits and Tobacco Branch, Bureau of Alcohol, Tobacco and Firearms, 650 Massachusetts Avenue NW., Washington, DC 20226 (202-927-8210).

SUPPLEMENTARY INFORMATION:

Background

ATF wishes to solicit comments from the public on its proposal to update and reissue the regulations pertaining to the exportation of tobacco products and cigarette papers and tubes. ATF plans to revise the regulations now in 27 CFR part 290, and to reissue the revised regulations as part 44 of the same chapter. ATF believes that the regulations can be reorganized to eliminate unnecessary duplications, and to delete regulatory requirements which may have become obsolete.

Pursuant to the provisions of 26 U.S.C. 5704(b), a manufacturer or export warehouse proprietor may remove tobacco products and cigarette papers and tubes, without payment of tax, for shipment to a foreign country, Puerto Rico, the Virgin Islands, or a possession of the United States, or for consumption beyond the jurisdiction of the internal revenue laws of the United States. Section 5706 provides for the allowance of drawback of tax paid on tobacco products and cigarette papers and tubes which have been exported in accordance with the regulations, upon the filing of a bond.

ATF wants to ensure that the regulations pertaining to the exportation of tobacco products and cigarette papers and tubes are made as simple as possible, while still providing the necessary protection to the revenue. In updating the regulations, primary emphasis will be given to the simplification of procedures for the exportation of tobacco products and cigarettes papers and tubes. ATF is also considering the use of commercial documents, in lieu of U.S. Customs certification, as evidence of exportation.

ATF wishes to solicit comments on the following issues:

(1) Can the recordkeeping and documentation requirements in the exportation regulations be made less burdensome on the industry, while continuing to provide adequate safeguards to the revenue? For example, the current regulations often call for the U.S. Customs Service to certify that tobacco products and cigarette papers and tubes have been exported from the United States. ATF believes that in some circumstances, proof of exportation can be provided by commercial documentation, such as signed copies of export bills of lading, or landing certificates issued by an official of the country or possession where the tobacco products have actually landed. Are there other types of commercial documentation which would provide adequate proof of exportation? Under what circumstances would such commercial documentation not provide adequate proof of exportation?

(2) Are there regulations in part 290 which are duplicative and unnecessary? Can sections of the regulations be combined to eliminate such duplication?

(3) Is there a need for greater flexibility in allowing different kinds of marks on packages of tobacco products? Section 290.184 currently requires marks on packages or labels of packages of tobacco products which are removed from the factory for exportation. The mark may consist of the name of the manufacturer removing the product and the location (by city and State) of the factory from which the products are to be removed, or may consist of the permit number of the factory from which the products are to be removed. Approved trade names of the manufacturer may be used in the mark as the name of the manufacturer. Should the regulations be amended to provide for the use of codes to designate the location of factories? Would this satisfy the purpose of the regulation, while providing greater flexibility to manufacturers?

Finally, ATF would like to solicit general comments on ways in which it could reduce paperwork, simplify procedures, and eliminate unnecessary regulations in this area, while continuing to maintain adequate safeguards to the revenue.

Public Participation

ATF requests comments from all interested persons. Comments received on or before the closing date will be carefully considered. Comments received after the closing date will be given the same consideration if it is

practical to do so, but assurance of consideration cannot be given except as to comments received on or before the closing date.

ATF will not recognize any material as confidential. all comments submitted in response to this notice will be available for public inspection during normal business hours at: ATF Public Reading Room, room 6480, 650 Massachusetts Avenue NW., Washington, DC 20226. Any material that the commenter considers to be confidential or inappropriate for disclosure to the public should not be included in the comment. The name of the person submitting the comment is not exempt from disclosure.

Drafting Information

The principal authors of this document are Mary A. Wood and Daniel J. Hiland of the Distilled Spirits and Tobacco Branch, Bureau of Alcohol, Tobacco and Firearms.

List of Subjects in 27 CFR Part 290

Administrative practice and procedure, Aircraft, Authority delegations (Government agencies), Cigarette papers and tubes, Claims, Customs duties and inspection, Excise taxes, Exports, Foreign trade zones, Labeling, Packaging and containers, Penalties, Surety bonds, Tobacco products, Vessels, Warehouses.

Authority: This advance notice of proposed rulemaking is issued under the authority in 26 U.S.C 7805.

Signed: August 7, 1992.

Stephen E. Higgins,

Director.

Approved: August 6, 1992.

Peter K. Nunez,

Assistant Secretary (Enforcement).

[FR Doc. 92-21389 Filed 9-4-92; 8:45 am]

BILLING CODE 4810-31-M

POSTAL SERVICE

39 CFR Part 111

Postage Meter Rental Agreements

AGENCY: Postal Service.

ACTION: Proposed rule.

SUMMARY: The Postal Service proposes to amend its rules to clarify that postage meter rental agreements must be in writing and that meter manufacturers must notify the Postal Service of the expiration or termination of agreements. These proposed changes will assist the Postal Service in verifying the validity of postage meter rental agreements between manufacturers and users.

DATES: Comments on the proposed rule must be received on or before October 8, 1992.

ADDRESSES: Written comments should be mailed or delivered to the Director, Office of Classification and Rates Administration, U.S. Postal Service, Room 8430, 475 L'Enfant Plaza SW, Washington, DC 20260-5903. Copies of all written comments will be available for inspection and photocopying between 9 a.m. and 4 p.m., Monday through Friday, at the above address.

FOR FURTHER INFORMATION CONTACT: Nicholas Stankosky, (202) 268-5311.

SUPPLEMENTARY INFORMATION: Current policy requires meter users to hold both a postage meter license with the Postal Service and a rental agreement with the meter manufacturer in order to have a meter in their possession. The Postal Service may revoke a license if the licensed user fails to comply with the requirements for use of postage meters.

Postal regulations do not explicitly state that the rental agreement must be in writing, although the Postal Service expects the agreements to be written. With over 1.4 million meters in use, the Postal Service cannot verify whether or not valid rental agreements between manufacturers and users exist unless the agreements are in written form.

Accordingly the pertinent rules in Domestic Mail Manual 144.14, 144.231 and 144.952b are proposed to be revised to require that all rental agreements be in writing in the format used by the applicable manufacturer. The proposed revisions also specify that the Postal Service will revoke a postage meter license upon receipt of written notification from a manufacturer, or other evidence, that a rental agreement has expired or has been otherwise terminated. An appropriate amendment to 39 CFR 111.3 to reflect these changes will be published if the proposal is adopted.

Although exempt from the provisions of the Administrative Procedure Act regarding proposed rulemaking (5 U.S.C. 553(b), (c)] by U.S.C. 410(a), the Postal Service invites public comment on the following proposed revisions to the Domestic Mail Manual, which is incorporated by reference in the Code of Federal Regulations. See 39 CFR part 111.

List of Subjects in 39 CFR Part 111

Postal Service.

PART 111—[AMENDED]

1. The authority citation for 39 CFR Part 111 continues to read:

Authority: 5 U.S.C. 552(a); 39 U.S.C. 101, 401, 403, 404, 3001-3011, 3201-3219, 3403-3406, 3621, 5001.

2. Amend Domestic Mail Manual 144.14, 144.231 and 144.952b to read:

144 POSTAGE METERS AND METER STAMPS

* * * * *

144.1 Postage Meters

* * * * *

144.14 Possession. Except for a meter manufacturer, no one may have possession of a postage meter without both a valid postage meter license for the Postal Service and a written rental agreement with the meter manufacturer. Anyone who fails to satisfy both requirements must return the appropriate meter to the manufacturer at the manufacturer's request.

144.2 Meter License

* * * * *

144.23 Revocation.

* * * * *

144.231 Reason. A license may be revoked for any of the following reasons:

a. The meter is used in connection with any unlawful scheme or enterprise.

b. The meter is not used during any consecutive 12 months.

c. The meter manufacturer provides written notification, or other evidence, that the written meter rental agreement has expired or has been otherwise terminated.

d. The licensee fails to comply with the requirements governing the use of postage meters.

* * * * *

144.9 Manufacture and Distribution of Postage Meters

* * * * *

144.95 Distribution.

* * * * *

144.952 Controls. * * *

* * * * *

b. Lease meters only to mailers to whom meter licenses have been issued by the Postal Service. Meter rental agreements must be in writing. Manufacturers must notify the licensing post office in writing if an agreement has been terminated or has expired.

Stanley F. Mires,

Assistant General Counsel, Legislative Division.

[FR Doc. 92-21336 Filed 9-4-92; 8:45 am]

BILLING CODE 7710-12-M

FEDERAL COMMUNICATIONS COMMISSION

47 CFR Part 25

[CC Docket No. 92-76]

Low-Earth Orbit Satellite Service

AGENCY: Federal Communications Commission.

ACTION: Notice of meeting of negotiated rulemaking committee.

SUMMARY: In accordance with the Federal Advisory Committee Act, Public Law 92-463, as amended, this notice advises interested persons of the final meeting of the Below 1 GHz LEO Negotiated Rulemaking Committee ("Committee"), which will be held at the Federal Communications Commission in Washington, DC

DATE: September 16,1992 at 9:30 a.m.

ADDRESSES: Federal Communications Commission, rm. 856, 1919 M Street, NW., Washington, DC 20554.

FOR FURTHER INFORMATION CONTACT: Thomas S. Tycz, Deputy Chief, Domestic Facilities Division, Common Carrier Bureau, Federal Communications Commission, at (202) 634-1860.

SUPPLEMENTARY INFORMATION: The agenda for the final meeting of the Committee will be to approve the minutes of the prior meeting and to discuss, revise and approve the final report of the Committee for presentation to the FCC.

Members of the general public may attend this meeting. The Federal Communications Commission will attempt to accommodate as many people as possible. However, admittance will limited to the seating available. There may be limited public oral participation, and the public may submit written comments to Thomas S. Tycz, the Committee's designated Federal representative, before the meeting.

Donna R. Searcy,

Secretary.

[FR Doc. 92-21469 Filed 9-4-92; 8:45 am]

BILLING CODE 6712-01-M

DEPARTMENT OF DEFENSE

GENERAL SERVICES ADMINISTRATION

NATIONAL AERONAUTICS AND SPACE ADMINISTRATION

48 CFR Part 45

[FAR Case 91-73]

Federal Acquisition Regulation; Records of Plant Equipment

AGENCIES: Department of Defense (DOD), General Services Administration (GSA), and National Aeronautics and Space Administration (NASA).

ACTION: Proposed rule.

SUMMARY: The Civilian Agency Acquisition Council (CAAC) and the Defense Acquisition Regulations Council (DARC) are proposing changes to the coverage at FAR 45.501, Definitions, and 45.505-5(a), Records of plant equipment, to clarify the procedures for use of summary records for plant equipment costing less than $5,000.

DATES: Comments should be submitted to the FAR Secretariat at the address shown below on or before November 9, 1992 to be considered in the formulation of a final rule.

ADDRESSES: Interested parties should submit written comments to: General Services Administration, FAR Secretariat (VRS), ATTN: Deloris Baker, 18th & F Streets, NW., room 4041, Washington, DC 20405.

Please cite FAR case 91-73 in all correspondence related to this case.

FOR FURTHER INFORMATION CONTACT: Ms. Linda Klein at (202) 501-3775 in reference to this FAR case. For general information, contact the FAR Secretariat, room 4041, GS Building, Washington, DC 20405 (202) 501-4755. Please cite FAR case 91-73.

SUPPLEMENTARY INFORMATION:

A. Background

The CAAC and the DARC approved proposed changes to FAR subpart 45.5 originating from a proposal from industry to encourage the use of summary records for recording and controlling plant equipment. Under this proposal, summary records are permitted for use with plant equipment costing less than $5,000, except when the contracting officer determines that individual records are necessary for effective control, calibration, or maintenance. Industry has advised that control and recordkeeping burden is a problem on plant equipment below $5,000 because of the need to alter property records each time an item in this category is moved within the contractor's facilities. The use of summary records as proposed will alleviate burden on contractors by eliminating full recordkeeping requirements on these relatively low-dollar items.

B. Regulatory Flexibility Act

The proposed rule is not expected to have a significant economic impact on a substantial number of small entities within the meaning of the Regulatory Flexibility Act, 5 U.S.C. 601, *et seq.*, because the rule is merely a clarification of existing FAR language. An Initial Regulatory Flexibility Analysis has, therefore, not been performed. Comments from small entities concerning the affected FAR subpart will be considered in accordance with section 610 of the Act. Such comments must be submitted separately and should cite 5 U.S.C. 601, *et seq.* (FAR case 91-73), in correspondence.

C. Paperwork Reduction Act

The Paperwork Reduction Act does not apply because the proposed changes to the FAR clarify but do not alter the recordkeeping or reporting requirements which have been approved under OMB Control Number 9000-0075.

List of Subjects in 48 CFR Part 45

Government procurement.

Dated: September 1, 1992.

Albert A. Vicchiolla,

Director, Office of Federal Acquisition Policy.

Therefore, it is proposed that 48 CFR part 45 be amended as set forth below:

PART 45—GOVERNMENT PROPERTY

1. The authority citation for 48 CFR part 45 continues to read as follows:

Authority: 40 U.S.C. 486(c); 10 U.S.C. chapter 137; and 42 U.S.C. 2473(c).

2. Section 45.501 is amended by adding "Summary record" in alphabetical order to read as follows:

45.501 Definitions.

* * * * *

"Summary Record," as used in this subpart, means a separate card, form, document or specific line(s) of computer data used to account for multiple quantities of a line item of plant equipment costing less than $5,000 per unit.

* * * * *

3. Section 45.505–5 is amended by revising paragraph (a) to read as follows:

45.505–5 Records of plant equipment.

(a) The contractor shall maintain individual item records for each item of plant equipment having a unit cost of $5,000 or more. Summary records are adequate for plant equipment costing less than $5,000 per unit, except where the contract administration office determines that individual item records are necessary for effective control, calibration, or maintenance. Summary records may reference a general location, provided the contractor can locate the property within a reasonable period of time.

* * * * *

[FR Doc. 92–21493 Filed 9–4–92; 8:45 am]
BILLING CODE 6820–34–M

Notices

Federal Register
Vol. 57, No. 174
Tuesday, September 8, 1992

This section of the FEDERAL REGISTER contains documents other than rules or proposed rules that are applicable to the public. Notices of hearings and investigations, committee meetings, agency decisions and rulings, delegations of authority, filing of petitions and applications and agency statements of organization and functions are examples of documents appearing in this section.

DEPARTMENT OF COMMERCE

Agency Forms Under Review by the Office of Management and Budget

DOC has submitted to the Office of management and Budget (OMB) for clearance the following proposals for collection of information under the provisions of the Paperwork Reduction Act (44 U.S.C. chapter 35).

Agency: Bureau of Export Administration (BXA).
Title: Request for Amendment Action.
Agency Form Number: BXA–685P.
OMB Approval Number: 0694–0007.
Type of Request: Extension of the expiration date of a currently approved collection.
Burden: 316 reporting/recordkeeping hours.
Number of Respondents: 1,184.
Avg Hours Per Response: 15 minutes for reporting requirements, 20 minutes per recordkeeper.
Needs and Uses: This collection of information is used by U.S. exporters to amend their outstanding export licenses for controlled goods. This amendment, if approved by BXA, allows the exporter to make the changes in lieu of applying for a new export license.
Affected Public: Businesses or other for-profit institutions, small businesses or organizations.
Frequency: On occasion and recordkeeping.
Respondent's Obligation: Required to obtain or retain a benefit.
OMB Desk Officer: Gary Waxman, (202) 395–7340, room 3208, New Executive Office Building, Washington, DC 20503.

Agency: National Oceanic and Atmospheric Administration (NOAA).
Title: Application for Fisheries Obligation Guarantee.
Agency Form Number: NOAA 88–1.
OMB Approval Number: 0648–0012.
Type of Request: Extension of the expiration date of a currently approved collection.
Burden: 10,400 hours.
Number of Respondents: 1,300.
Avg Hours Per Response: 8 hours.
Needs and Uses: This application is used by commercial fishermen to obtain guaranteed financing under the Fisheries Obligation Guarantee Program. Information is used to determine eligibility and to monitor program participation.
Affected Public: Individuals or households, businesses or other for-profit institutions, small businesses or organizations.
Frequency: On occasion, annually.
Respondent's Obligation: Required to obtain or retain a benefit.
OMB Desk Officer: Ron Minsk, (202) 395–3084, room 3019, New Executive Office Building, Washington, DC 20503.

Agency: National Oceanic and Atmospheric Administration (NOAA).
Title: Monthly Cold Storage Fish Report.
Agency Form Number: NOAA 88–16.
OMB Approval Number: 0648–0015.
Type of Request: Extension of the expiration date of a currently approved collection.
Burden: 1,000 hours.
Number of Respondents: 200.
Avg Hours Per Response: 8 minutes (12 reports annually).
Needs and Uses: These data on cold storage holdings are needed by NMFS for fishery management and development purposes, and by industry for orderly distribution and purchase of fishery products.
Affected Public: Businesses or other for-profit institutions, small businesses or organizations.
Frequency: Monthly.
Respondent's Obligation: Voluntary.
OMB Desk Officer: Ron Minsk, (202) 395–3084, room 3019, New Executive Office Building, Washington, DC 20503.

Agency: National Oceanic and Atmospheric Administration (NOAA).
Title: Saltonstall-Kennedy (S–K) Grant Application, Project Quarterly and Final Reports.
Agency Form Numbers: 88–204 and 88–205.
OMB Approval Numbers: 0648–0135.
Type of Request: Extension of the expiration date of a currently approved collection.
Burden: 2,572 hours.
Number of Respondents: 200.
Avg Hours Per Response: Applications—8 hours; Quarterly Reports—2 hours; Final Reports—13 hours.
Needs and Uses: Under the S–K Act, financial assistance is made available through the Secretary of Commerce to the public for projects which help strengthen or develop the U.S. fishing industry. Information is needed to decide which projects should be funded; quarterly reports are needed to ensure Federal monies are used properly; and final reports are needed to assess the success of completed projects.
Affected Public: Individuals, state or local governments, farms, businesses or other for-profit institutions, federal agencies or employees, non-profit institutions, small businesses or organizations.
Frequency: On occasion, quarterly, annually.
Respondent's Obligation: Required to obtain or retain a benefit.
OMB Desk Officer: Ron Minsk, (202) 395–3084, room 3019, New Executive Office Building, Washington, DC 20503.

Agency: National Oceanic and Atmospheric Administration (NOAA).
Title: Pacific Tuna Fisheries.
Agency Form Number: None.
OMB Approval Number: 0648–0148.
Type of Request: Extension of the expiration date of a currently approved collection.
Burden: 850 reporting hours.
Number of Respondents: 72.
Avg Hours Per Response: .1 hours (113 responses per respondent).
Needs and Uses: Data are used by the National Marine Fisheries Service and the Inter-American Tropical Tuna Commission biologists to determine effects of fishing on tuna abundance. Results forms the basis for stock assessments.
Affected Public: Individuals or households, businesses or other for-profit institutions, small businesses or organizations.
Frequency: By trip.
Respondent's Obligation: Mandatory.
OMB Desk Officer: Ron Minsk, (202) 395–3084, room 3019, New Executive Office Building, Washington, DC 20503.

Agency: National Oceanic and Atmospheric Administration (NOAA).
Title: Atlantic Tuna Fisheries.
Agency Form Number: None.
OMB Approval Number: 0648–0168.

Type of Request: Extension of the expiration date of a currently approved collection.
Burden: 56 reporting hours.
Number of Respondents: 5.
Avg Hours Per Response: 6 minutes per each day fished (approximately 100 days per year for 5 vessels).
Needs and Uses: Data are used by the National Marine Fisheries Service (NMFS) and the International Commission for the Conservation of Atlantic Tunas (ICATT) biologists to determine effects of fishing on tuna abundance. This information is needed to determine stock conditions.
Affected Public: Businesses or other for-profit institutions.
Frequency: On occasion, annually.
Respondent's Obligation: Mandatory.
OMB Desk Officer: Ron Minsk, (202) 395–3084, room 3019, New Executive Office Building, Washington, DC 20503.

Copies of the above information collection proposals can be obtained by calling or writing Edward Michals, DOC Forms Clearance Officer, (202) 377–3271, Department of Commerce, room 5327, 14th and Constitution Avenue, NW., Washington, DC 20230.

Written comments and recommendations for the proposed information collections should be sent to the respective OMB Desk Officer listed above.

Dated: August 31, 1992.

Edward Michals,

Departmental Forms Clearance Officer, Office of Management and Organization.

[FR Doc. 92–21474 Filed 9–4–92; 8:45 am]

BILLING CODE 3510–CW–F

International Trade Administration

Export Trade Certificate of Review

AGENCY: International Trade Administration, Commerce.

ACTION: Notice of initiation of process of revoke export trade certificate of review No. 90–00004.

SUMMARY: The Department of Commerce had issued an export trade certificate of review to Dimick International & Associates, Inc. Because this certificate holder has failed to file an annual report as required by law, the Department is initiating proceedings to revoke the certificate. This notice summarizes the notification letter sent to Dimick International & Associates, Inc.

FOR FURTHER INFORMATION CONTACT: George Muller, Director, Office of Export Trading Company Affairs, International Trade Administration, 202/377–5131. This is not a toll-free number.

SUPPLEMENTARY INFORMATION: Title III of the Export Trading Company Act of 1982 ("the Act") (15 U.S.C. 4011–21) authorized the Secretary of Commerce to issue export trade certificates of review. The regulations implementing title III ("the Regulations") are found at 15 CFR part 325. Pursuant to this authority, a certificate of review was issued on May 15, 1990 to Dimick International & Associates, Inc

A certificate holder is required by law (section 308 of the Act, 15 U.S.C. 4018) to submit to the Department of Commerce annual reports that update financial and other information relating to business activities covered by its certificate. The annual report is due within 45 days after the anniversary date of the issuance of the certificate of review (§§ 325.14(a) and (b) of the Regulations). Failure to submit a complete annual report may be the basis for revocation. [Sections 325.10(a) and 325.14(c) of the Regulations].

The Department of Commerce sent to Dimick International & Associates, Inc. on May 21, 1992, a letter containing annual report questions with a reminder that its annual report was due on June 29, 1992. Additional reminders were sent on July 10, 1992 and on August 12, 1992. The Department has received no written response to any of these letters.

On September 2, 1992, and in accordance with § 325.10 (c)(2) of the Regulations, a letter was sent by certified mail to notify Dimick International & Associates, Inc. that the Department was formally initiating the process to revoke its certificate. The letter stated that this action is being taken for the certificate holder's failure to file an annual report.

In accordance with § 325.10(c)(2) of the Regulations, each certificate holder has thirty days from the day after its receipt of the notification letter in which to respond. The certificate holder is deemed to have received this letter as of the date on which this notice is published in the **Federal Register**. For good cause shown, the Department of Commerce can, at its discretion, grant a thirty-day extension for a response.

If the certificate holder decides to respond, it must specifically address the Department's statement in the notification letter that it has failed to file an annual report. It should state in detail why the facts, conduct, or circumstances described in the notification letter are not true, or if they are, why they do not warrant revoking the certificate. If the certificate holder does not respond within the specified period, it will be considered an admission of the statements contained in the notification letter (§ 325.10(c)(2) of the Regulations).

If the answer demonstrates that the material facts are in dispute, the Department of Commerce and the Department of Justice shall, upon request, meet informally with the certificate holder. Either Department may require the certificate holder to provide the documents or information that are necessary to support its contentions (§ 325.10(c)(3) of the Regulations).

The Department shall publish a notice in the **Federal Register** of the revocation or modification or a decision not to revoke or modify § 325.10(c)[4] of the Regulations). If there is a determination to revoke a certificate, any person aggrieved by such final decision may appeal to an appropriate U.S. district court within 30 days from the date on which the Department's final determination is published in the **Federal Register** (§§ 325.10(c)(4) and 325.11 of the Regulations).

Dated: September 2, 1992.

George Muller,

Director, Office of Export Trading Company Affairs.

[FR Doc. 92–21457 Filed 9–4–92; 8:45 am]

BILLING CODE 3510–DR–M

National Institute of Standards and Technology

[Docket No. 920536–2136]

RIN 0693–AA94

A Proposed Federal Information Processing Standard for Automated Password Generator

AGENCY: National Institute of Standards and Technology (NIST), Commerce.

ACTION: Notice; request for comments.

SUMMARY: A Federal Information Processing Standard (FIPS) for Automated Password Generator is being proposed. This proposed standard specifies an algorithm to automate the generation of passwords for use in systems that require computer generated pronounceable passwords. The algorithm uses random numbers to select the characters that form the random pronounceable passwords. The random numbers are generated by a random number subroutine based on the Electronic Codebook mode of the Data Encryption Standard (DES) (FIPS PUB 46–1). This proposed standard is for use in conjunction with FIPS PUB 112, Password Usage Standard, which specifies basic security criteria for the

design, implementation and use of passwords.

The purpose of this notice is to solicit views from the public, manufacturers, and Federal, State, and local government users prior to submission of this proposed standard to the Secretary of Commerce for review and approval.

The proposed standard contains two sections: (1) An announcement, which provides information concerning the applicability, implementation, and maintenance of the standard; and (2) specifications which deal with the technical aspects of the standard. Only the announcement section of the standard is provided in this notice. Interested parties may obtain copies of the specifications section from the Standards Processing Coordinator (ADP), National Institute of Standards and Technology, Technology Building, room B–64, Gaithersburg, MD 20899, telephone (301) 975–2816.

DATES: Comments on this proposed standard must be received on or before December 7, 1992.

ADDRESSES: Written comments concerning the proposed standard should be sent to: Director, Computer Systems Laboratory, ATTN: Proposed FIPS for Automated Password Generator, Technology Building, room B–154, National Institute of Standards and Technology, Gaithersburg, MD 20899.

Written comments received in response to this notice will be made part of the public record and will be made available for inspection and copying in the Central Reference and Records Inspection Facility, room 6020, Herbert C. Hoover Building, 14th Street between Pennsylvania and Constitution Avenues, NW., Washington, DC 20230.

FOR FURTHER INFORMATION CONTACT: Mr. Charles Dinkel, National Institute of Standards and Technology, Gaithersburg, MD 20899, telephone (301) 975–3367.

Dated: August 31, 1992.

John W. Lyons,

Director.

Federal Information Processing Standards Publication

DRAFT (date)

Announcing the Standard for Automated Password Generator

Federal Information Processing Standards Publications (FIPS PUBS) are issued by the National Institute of Standards and Technology (NIST) after approval by the Secretary of Commerce pursuant to Section 111(d) of the Federal Property and Administrative Services Act of 1949 as amended by the Computer Security Act of 1987, Public Law 100–235.

1. Name of Standard. Automated Password Generator.

2. Category of Standard. Computer Systems, Computer Security.

3. Explanation. A password is a protected character string used to authenticate the identity of a computer system user or to authorize access to system resources. When users are allowed to select their own passwords they often select passwords that are easily compromised. An automated password generator creates random passwords that have no association with a particular user.

This Automated Password Generator Standard specifies an algorithm to generate passwords for the protection of computer resources. This standard is for use in conjunction with FIPS PUB 112. Password Usage Standard, which provides basic security criteria for the design, implementation, and use of passwords. The algorithm uses random numbers to select the characters that form the random pronounceable passwords. The random numbers are generated by a random number subroutine based on the Electronic Codebook mode of the Data Encryption Standard (DES) (FIPS PUB 46–1). The random number subroutine uses a pseudorandom DES key generated in accordance with the procedure described in Appendix C of ANSI X9.17 (FIPS PUB 171).

Similar to DES, the FIPS for Automated Password Generator is an interoperability standard. Interoperability standards specify functions and formats so that data transmitted can be properly acted upon when received by another computer. This type of standard is independent of physical implementation. For discussion purposes a NIST implementation of the Automated Password Generator is provided. It is expected that commercial implementations will be based on the latest technologies and differ from NIST's, however the results should be logically equivalent to that of this FIPS.

4. Approving Authority. Secretary of Commerce.

5. Maintenance Agency. U.S. Department of Commerce, National Institute of Standards and Technology (NIST), Computer Systems Laboratory (CSL).

6. Cross Index.

a. American National Standards Institute (ANSI) X9.28, *Financial Institution Multiple Center Key Management (Wholesale)* Draft.

b. Department of Defense CSC–STD–002–85, *Password Management Guideline.*

c. Federal Information Processing Standards Publication (FIPS PUB) 48, *Guidelines on Evaluation of Techniques for Automated Personal Identification.*

d. Federal Information Processing Standards Publication (FIPS PUB) 46–1, *Data Encryption Standard.*

e. Federal Information Processing Standards Publication (FIPS PUB) 81, *DES Modes of Operation.*

f. Federal Information Processing Standards Publication (FIPS PUB) 83, *Guideline on User Authentication Techniques for Computer Network Access Control.*

g. Federal Information Processing Standards Publication (FIPS PUB) 112, *Password Usage.*

h. Federal Information Processing Standards Publication (FIPS PUB) 171, *Key Management Using ANSI X9.17.*

i. National Technical Information Service (NTIS) AD A 017676, *A Random Word Generator for Pronounceable Passwords.*

7. Objectives. The objectives of this standard are to:

a. improve the administration of password systems that are used for authenticating the identity of individuals accessing computer resources or files;

b. provide a standard automated method for producing pronounceable passwords that have no association with a particular user;

c. produce passwords that are easily remembered, stored and entered into computer systems, yet not readily susceptible to automated techniques that have been developed to search for and disclose passwords.

8. Applicability. This standard is applicable to the development of procurement or design specifications for implementing an automatic password generation algorithm within a computer system. It shall be used by all Federal departments and agencies when there is a requirement for computer generated pronounceable passwords for authenticating users of computer systems, or for authorizing access to resources in those systems.

This standard does not require the use of passwords in a computer system, but establishes an automatic password generation algorithm for use in systems where an agency's computer security policy requires computer generated pronounceable passwords. It should be used in conjunction with FIPS PUB 112, Password Usage Standard, which specifies basic security criteria for the design, implementation, and use of passwords.

9. Export Control. Implementations of this standard are subject to Federal Government export controls as specified in Title 15, Code of Federal Regulations, Parts 768 through 799. Exporters are advised to contact the Department of Commerce, Bureau of Export Administration for more information.

10. Specifications. Federal Information Processing Standard (FIPS) # # #, Automated Password Generator (affixed);

11. Qualifications. The Automated Password Generator uses the Electronic Codebook (ECB) mode of the Data Encryption Standard (DES), Federal Information Processing Standard 46–1 (FIPS PUB 46–1), as the random number generator. This mode of operation is specified in FIPS 81, DES Modes of Operation.

The protection provided by the DES algorithm against potential threats has been reviewed every 5 years since its adoption in 1977 and has been reaffirmed during each of those reviews. The DES, and the possible threats reducing the security provided by the use of DES will undergo continual review by NIST and other cognizant Federal organizations. The new technology available at review time will be evaluated to determine its impact on the DES. In addition, the awareness of any breakthrough in technology

or any mathematical weakness of the algorithm will cause NIST to reevaluate the DES and provide necessary revisions.

12. Implementation Schedule. This Standard becomes effective 6 months following approval by the Secretary of Commerce.

13. Waivers. Under certain exceptional circumstances, the heads of Federal departments and agencies may approve waivers to Federal Information Processing Standards (FIPS). The head of such agency may redelegate such authority only to a senior official designated pursuant to section 3506(b) of Title 44, U.S. Code. Waivers shall be granted only when compliance with a standard would:

a. adversely affect the accomplishment of the mission of an operator of a Federal computer system, or

b. cause a major adverse financial impact on the operator which is not offset by Government-wide savings.

Agency heads may act upon a written waiver request containing the information detailed above. Agency heads may also act without a written waiver request when the determine that conditions for meeting the standard cannot be met. Agency heads may approve waivers only by a written decision which explains the basis on which the agency head made the required finding(s). A copy of each such decision, with procurement sensitive or classified portions clearly identified, shall be sent to: National Institute of Standards and Technology; ATTN: FIPS Waiver Decisions; Technology Building, Room B–154; Gaithersburg, MD 20899.

In addition, notice of each waiver granted and each delegation of authority to approve waivers shall be sent promptly to the Committee on Government Operations of the House of Representatives and the Committee on Government Affairs of the Senate and shall be published promptly in the Federal Register.

When the determination on a waiver apples to the procurement of equipment and/or services, a notice of the waiver determination must be published in the Commerce Business Daily as a part of the notice of solicitation for offers of an acquisition or, if the waiver determination is made after that notice is published, by amendment to such notice.

A copy of the waiver, any supporting documents, the document approving the waiver and any supporting and accompanying documents, with such deletions as the agency is authorized and decides to make under 5 U.S.C. Sec. 552(b), shall be part of the procurement documentation and retained by the agency.

14. Where to obtain copies. Copies of this publication are available for sale by the National Technical Information Service, U.S. Department of Commerce, Springfield, VA 22161. When ordering, refer to Federal Information Processing Standards Publication # # # # # (FIPS PUB # # # #), and identify the title. When microfiche is desired, this should be specified. Payment may be made by check, money order, credit card, or deposit account.

[FR Doc. 92–21459 Filed 9–4–92; 8:45 am]

BILLING CODE 3510–CN–M

National Oceanic and Atmospheric Administration

South Atlantic Fishery Management Council; Rock Shrimp Fishery; Meeting

AGENCY: National Marine Fisheries Service (NMFS), NOAA, Commerce.

ACTION: Notice of public scoping meetings and request for comments.

SUMMARY: The South Atlantic Fishery Management Council will hold public scoping meetings to solicit industry input on the possible need for management of the rock shrimp fishery.

Recent dramatic declines in rock shrimp landings have raised concerns among fishermen and dealers that there may be biological and/or environmental problems in the fishery that could be alleviated by management action. This is an opportunity for the rock shrimp industry to discuss any problems in the fishery and to suggest solutions.

DATES: Written comments on the rock shrimp fishery must be received by October 23, 1992. See "**SUPPLEMENTARY INFORMATION**" for dates, times, and locations of meetings.

ADDRESSES: Written comments on the rock shrimp fishery should be addressed to Robert K. Mahood, Executive Director, South Atlantic Fishery Management Council, One Southpark Circle, suite 306, Charleston, SC 29407–4699, FAX (803) 769–4520.

FOR FURTHER INFORMATION CONTACT: Carrie Knight, Public Information Officer, South Atlantic Fishery Management Council, One Southpark Circle, suite 306, Charleston, SC 29407 (803) 571–4366.

SUPPLEMENTARY INFORMATION: The public scoping meetings will begin at 3 p.m., and adjourn at 6 p.m., local time, and are scheduled as follows:

1. Wednesday, September 23: Cocoa Beach Hilton, 1550 N. Atlantic Avenue, Cocoa Beach, Florida 32932, (407) 799–0003.
2. Thursday, September 24: Holiday Inn—Oceanfront, 1617 N. First Street, Jacksonville Beach, FL 32250 (904) 249–9071.

Dated: September 1, 1992.

David S. Crestin,

Acting Director, Office of Fisheries Conservation and Management, National Marine Fisheries Service.

[FR Doc. 92–21592 Filed 9–4–92; 8:45 am]

BILLING CODE 3510–22–M

National Institute of Standards and Technology

Visiting Committee on Advanced Technology; Meeting

AGENCY: National Institute of Standards and Technology, Department of Commerce.

ACTION: Notice of partially closed meeting.

SUMMARY: Pursuant to the Federal Advisory Committee Act, 5 U.S.C. app. 2, notice is hereby given that the National Institute of Standards and Technology Visiting Committee on Advanced Technology will meet on Wednesday, September 16, 1992, from 8:30 a.m. to 5 p.m., and on Thursday, September 17, 1992, from 8:30 a.m. to 9:30 a.m. The Visiting Committee on Advanced Technology is composed of nine members appointed by the Director of the National Institute of Standards and Technology who are eminent in such fields as business, research, new product development, engineering, labor, education, management consulting, environment, and international relations. The purpose of this meeting is to review and make recommendations regarding general policy for the Institute, its organization, this budget, and its programs within the framework of applicable national policies as set forth by the President and the Congress. Presentations will be given on information technology issues, the Manufacturing Excellence Partnership, NIST Strategic Planning, the Board on Assessment of NIST Programs' annual report, and the Advanced Technology Program. The discussion on NIST budget, scheduled to begin at 3:15 p.m. and to end at 5 p.m. on September 16, 1992, and to reconvene on September 17, 1992, at 8:30 a.m. and to end at 9:30 a.m., will be closed.

DATES: The meeting will convene September 16, 1992, at 8:30 a.m. and will adjourn at 9:30 a.m. on September 17, 1992. The meeting will be open to the public on September 16 from 8:30 a.m. to 3 p.m. The meeting will be closed from 3:15 p.m. to 5 p.m. on September 16, and from 8:30 a.m. to 9:30 a.m. on September 17, 1992.

ADDRESSES: The meeting will be held in Lecture Room A, Administration Building, National Institute of Standards and Technology, Gaithersburg, Maryland.

FOR FURTHER INFORMATION CONTACT: Dale E. Hall, Visiting Committee Executive Director, National Institute of Standards and Technology,

Gaithersburg, Maryland 20899, telephone number (301) 975–2158.

SUPPLEMENTARY INFORMATION: The Assistant Secretary for Administration, with the concurrence of the General Counsel, formally determined on September 1, 1992, that portions of the meeting of the Visiting Committee on Advanced Technology which involve examination and discussion of the budget for the Institute may be closed in accordance with section 552(b)(9)(B) of title 5, United States Code, since the meeting is likely to disclose financial information that may be privileged or confidential.

Dated: September 1, 1992.

Samuel Kramer,

Acting Director.

[FR Doc. 92–21545 Filed 9–4–92; 8:45 am]

BILLING CODE 3510–13–M#

COMMITTEE FOR THE IMPLEMENTATION OF TEXTILE AGREEMENTS

Announcement of Limit for Certain Wool Textile Products Produced or Manufactured in Hong Kong

September 1, 1992.

AGENCY: Committee for the Implementation of Textile Agreements (CITA).

ACTION: Notice.

FOR FURTHER INFORMATION CONTACT: Anne Novak, International Trade Specialist, Office of Textiles and Apparel, U.S. Department of Commerce, (202) 377–4212.

SUPPLEMENTARY INFORMATION:

Authority: Executive Order 11651 of March 3, 1972, as amended; section 204 of the Agricultural Act of 1956, as amended (7 U.S.C. 1854).

A notice published in the **Federal Register** on August 5, 1992 (57 FR 34555) announced that the United States Government had requested consultations with the Government of Hong Kong on wool textile products in Category 433.

In a Memorandum of Understanding dated August 18, 1992, the Governments of the United States and Hong Kong agreed to amend further their Bilateral Textile Agreement of August 4, 1986, to establish a limit for wool textile products in Category 433 for the agreement periods beginning on January 1, 1992 and extending through December 31, 1995. The 1992 level for Category 433 is 9,000 dozen.

A description of the textile and apparel categories in terms of HTS numbers is available in the CORRELATION: Textile and Apparel Categories with the Harmonized Tariff Schedule of the United States (see **Federal Register** notice 56 FR 60101, published on November 27, 1991). Also see 56 FR 63716, published on December 5, 1991.

Auggie D. Tantillo,

Chairman, Committee for the Implementation of Textile Agreements.

[FR Doc. 92–21473 Filed 9–4–92; 8:45 am]

BILLING CODE 3510–DR–F

COMMODITY FUTURES TRADING COMMISSION

Chicago Board of Trade Proposed Futures and Futures Option Contracts

AGENCY: Commodity Futures Trading Commission.

ACTION: Notice of availability of the terms and conditions of proposed commodity futures and futures option contracts.

SUMMARY: The Chicago Board of Trade (CBOT) has applied for designation as a contract market in National Catastrophe Insurance Futures, Eastern Catastrophe Insurance Futures, Midwestern Catastrophe Insurance Futures, and Western Catastrophe Insurance Futures. The CBOT also has submitted options based on each of those four futures contracts. The Director of the Division of Economic Analysis (Division) of the Commission, acting pursuant to the authority delegated by Commission Regulation 140.96, has determined that publication of the proposal for comment is in the public interest, will assist the Commission in considering the views of interested persons, and is consistent with the purposes of the Commodity Exchange Act.

DATES: Comments must be received on or before October 8, 1992.

ADDRESSES: Interested persons should submit their views and comments to Jean A. Webb, Secretary, Commodity Futures Trading Commission, 2033 K Street NW., Washington, DC 20581. Reference should be made to the CBOT National Catastrophe Insurance Futures, Eastern Catastrophe Insurance Futures, Midwestern Catastrophe Insurance Futures, and Western Catastrophe Insurance Futures or the options on those futures contracts.

FOR FURTHER INFORMATION CONTACT: Please contact Steve Sherrod of the Division of Economic Analysis, Commodity Futures Trading Commission, 2033 K Street NW., Washington, DC 20581, telephone 202–254–7303.

SUPPLEMENTARY INFORMATION: Copies of the terms and conditions of the proposed contracts will be available for inspection at the Office of the Secretariat, Commodity Futures Trading Commission, 2033 K Street, NW., Washington, DC 20581. Copies of the terms and conditions can be obtained through the Office of the Secretariat by mail at the above address or by phone at (202) 254–6314.

Other materials submitted by the CBOT in support of the applications for contract market designation may be available upon request pursuant to the Freedom of Information Act (5 U.S.C. 552) and the Commission's regulations thereunder (17 CFR part 145 (1987)), except to the extent they are entitled to confidential treatment as set forth in 17 CFR 145.5 and 145.9. Requests for copies of such materials should be made to the FOI, Privacy and Sunshine Act Compliance Staff of the Office of the Secretariat at the Commission's headquarters in accordance with 17 CFR 145.7 and 145.8.

Any person interested in submitting written data, views, or arguments on the terms and conditions of the proposed contracts, or with respect to other materials submitted by the CBOT in support of the applications, should send such comments to Jean A. Webb, Secretary, Commodity Futures Trading Commission, 2033 K Street, NW., Washington, DC 20581 by the specified date.

Issued in Washington, DC, on August 31, 1992.

Gerald A. Gay,

Director.

[FR Doc. 92–21472 Filed 9–4–92; 8:45 am]

BILLING CODE 6351–01–M

DEPARTMENT OF ENERGY

Grant Award for Environmental Restoration Program for Technical Review and Services for Lawrence Livermore National Laboratory—Site 300; Noncompetitive Award

AGENCY: Department of Energy (DOE).

ACTION: Notice of Noncompetitive Financial Assistance Award.

SUMMARY: Pursuant to the DOE Financial Assistance Rules, 10 CFR 600.7(b) the U.S. Department of Energy, San Francisco Field Office announces that it plans to make a noncompetitive grant award for the technical review and services for the Environmental Restoration Program—Lawrence Livermore National Laboratory—Site 300. The term of the award will cover

the period 30 September 1992 and end on 29 August 1994. The total grant award is $116,494.00.

ADDRESSES: U.S. Department of Energy, San Francisco Field Office, 1333 Broadway, Oakland, CA 94612.

FOR FURTHER INFORMATION CONTACT: Terrie Brown of the DOE San Francisco Field Office, Contracts Management Division, telephone (510) 273–4134.

SUPPLEMENTARY INFORMATION: The proposed grant award primarily supports the management and operation of the environmental restoration program at Lawrence Livermore National Laboratory—Site 300. The overall objectives and goals of the work is to perform timely technical reviews and substantive comments on reports and studies, identification and explanation of unique State requirements; field investigations and cleanup activities and support and assist DOE in conducting public participation activities.

Eligibility for this grant award is being limited to the State of California Environmental Protection Agency, Department of Toxic Substances Control because LLNL—Site 300 is located in the State of California and the state has sole authority within its borders.

Issued in Oakland, CA, August 20, 1992.

Joan Macrusky,

Chief, ER/DP/EM Branch, Contracts Management Division.

[FR Doc. 92–21416 Filed 9–4–92; 8:45 am]

BILLING CODE 6450–01–M

Chicago Field Office; Noncompetitive Award of Financial Assistance; South Carolina Energy Research and Development Center; Clemson University

AGENCY: Department of Energy.

ACTION: Notice of noncompetitive financial assistance award.

SUMMARY: The Department of Energy (DOE), Chicago Field Office, through the Atlanta Support Office, announces that pursuant to DOE Financial Assistance Rules 10 CFR 600.7(b)(2), it intends to award a grant to South Carolina Energy Research and Development Center-Clemson University to provide financial assistance for the Symposium of Energy Futures III. The anticipated overall objective of this project is to provide a forum for discussing national, regional and state impacts of energy policy development and implementation.

FOR FURTHER INFORMATION CONTACT: James R. Powell, U.S. Department of Energy, Atlanta Support Office, 730 Peachtree Street, NE., Atlanta, Georgia 30308, (404) 347–2888.

SUPPLEMENTARY INFORMATION: The object of Symposium III is to provide participants with the latest information on energy supplies, projected energy demands, and emerging energy technologies. The widespread realization that energy, economy and the environment are tightly interrelated now drives most energy decisions. Symposium III reflects this coming together of the Three E's with a diverse group of individuals and institutions joining to discuss our Energy Future. The Symposium will permit all participants to interact first hand with leading authorities in a mix of energy fields and to exchange and refine ideas. Discussion sessions between the speakers and Symposium III attendants will be highly encouraged so that a free flow of ideas can develop. The Symposium represents an unparalleled opportunity to obtain insights for effective planning for the future.

The grant application is being accepted by DOE because it knows of no other organization which is conducting or planning to conduct this type of conference. The project period for the grant award is a one-year period, expected to begin in September 1992. DOE plans to provide funding in the amount of $5,000 for this project period.

Johnnie D. Greenwood,

Director, Contracts Division.

[FR Doc. 92–21531 Filed 9–4–92; 8:45 am]

BILLING CODE 6450–01–M

Office of Hearings and Appeals

Cases Filed During the Week of July 31 through August 7, 1992

During the Week of July 31 through August 7, 1992, the appeals and applications for exception or other relief listed in the Appendix to this Notice were filed with the Office of Hearings and Appeals of the Department of Energy. Submissions inadvertently omitted from earlier lists have also been included.

Under DOE procedural regulations, 10 CFR part 205, any person who will be aggrieved by the DOE action sought in these cases may file written comments on the application within ten days of service of notice, as prescribed in the procedural regulations. For purposes of the regulations, the date of service of notice is deemed to be the date of publication of this Notice or the date of receipt by an aggrieved person of actual notice, whichever occurs it. All such comments shall be filed with the Office of Hearings and Appeals, Department of Energy, Washington, DC 20585.

Dated: September 1, 1992.

George B. Breznay,

Director, Office of Hearings and Appeals.

LIST OF CASES RECEIVED BY THE OFFICE OF HEARINGS AND APPEALS

[Week of July 31 through August 7, 1992]

Date	Name and location of applicant	Case No.	Type of submission
July 30, 1992	ERA/Dalco Petroleum, Washington, DC	LRZ–0019	Motion to Dismiss. *If Granted:* Proposed Remedial Order issued to Dalco Petroleum & Wayne Zang would be dismissed.
Aug. 3, 1992	California Delta Newspaper, Inc., Carmichael, CA	LFA–0231	Appeal of an Information Request Denial. *If Granted:* The April 23, 1992 Denial of the Freedom of Information Request filed by California Delta Newspaper, Inc., would be rescinded, and the Requester would receive access to DOE information.
Aug. 3, 1992	Government Accountability Project, Seattle, WA	LFA–0230	Appeal of an Information Request Denial. *If Granted:* The May 20, 1992 Freedom of Information Request Denial issued by the Office of Administrative Services would be rescinded, and the Government Accountability Project would receive access to requested records pursuant to the FOIA and Privacy Act.

LIST OF CASES RECEIVED BY THE OFFICE OF HEARINGS AND APPEALS—Continued

[Week of July 31 through August 7, 1992]

Date	Name and location of applicant	Case No.	Type of submission
Aug. 3, 1992	Gulf/T.E. Hinson Gulf, Atlantic Beach, FL	RR300-194	Request for Modification/Rescission in the Gulf Refund Proceeding. *If Granted:* The July 1, 1992 Dismissal Letter (Case No. RF300-14940) issued to T.E. Hinson Gulf regarding the firm's Application for Refund submitted in the Gulf refund proceeding would be modified.
Aug. 3, 1992	RBR America Inc., Armor, Hudson, NY	LFA-0229	Appeal of an Information Request Denial. *If Granted:* The June 29, 1992 Freedom of Information Request Denial issued by the Bonneville Power Administration would be rescinded, and RBR America, Inc., Armor would receive access to requested DOE information.
Aug. 4, 1992	Gulf/Lamar Davis Gulf, West Palm Beach, FL	RR300-195	Request for Modification/Rescission in the Gulf Refund Proceeding. *If Granted:* The July 1, 1992 Dismissal Letter (Case No. RF300-14848) issued to Lamar Davis Gulf regarding the firm's Application for Refund submitted in the Gulf refund proceeding would be modified.
Aug. 6, 1992	Gulf/Bob's Gulf, Woodbridge, VA	RR300-196	Request for Modification/Rescission in the Gulf Refund Proceeding. *If Granted:* The July 1, 1992 Dismissal Letter (Case No. RF300-14797) issued to Bob's Gulf regarding the firm's Application for Refund submitted in the Gulf refund proceeding would be modified.

REFUND APPLICATIONS RECEIVED

Date received	Name of refund proceeding/name of refund applicant	Case number
7/31/92 Thru 8/7/92	Crude Oil Applications Received	RF272-93793 Thru RF272-93803
7/31/92 Thru 8/7/92	Texaco Refund Applications Received	RF321-19058 Thru RF321-19095
7/31/92 Thru 8/7/92	Gulf Oil Refund Applications Received	RF300-20423 Thru RF300-20454
7/31/92 Thru 8/7/92	Appex/Clark Refund Applications Received	RF342-292 Thru RF342-304
8/4/92	Al's Arco	RF304-13240
8/4/92	Allen's Arco in Wells	RF304-13241
8/4/92	Apache Junction School	RF304-13242
8/4/92	Harlan Oil Co	RF304-13243
8/4/92	American Lumber Co	RF324-55

[FR Doc. 92-21540 Filed 9-4-92; 8:45 am]

BILLING CODE 6450-01-M

Federal Energy Regulatory Commission

Application Filed with the Commission

September 1, 1992.

Take notice that the following hydroelectric application has been filed with the Federal Energy Regulatory Commission and is available for public inspection.

a. *Type of Application*: Minor License.

b. *Project No.*: 10849-001.

c. *Date Filed*: July 9, 1992.

d. *Applicant*: Hydro-Power Electric of Nevada, Inc.

e. *Name of Project*: Empire Hydroelectric Project.

f. *Location*: On the Snake River at river mile 594.5 in Gooding County, Idaho, near the town of Buhl. Section 1, T.9S., R.14E., Boise Meridian.

g. *Filed Pursuant to*: Federal Power Act, 16 USC 791(a)-825(r).

h. *Applicant Contact*: Hydro-Power Electric of Nevada, Inc., c/o Robert Jones, 1766 Addison Avenue East, Twin Falls, ID 83301, (208) 733-0404.

Mr. Larry Falkner, L.B. Industries, Inc., 1401 Shoreline Drive, P.O. Box 2797, Boise, ID 83701, (208) 345-7515.

Carl L. Myers, P.E., Myers Engineering Company, P.A., 750 Warm Springs Avenue, Boise, ID 83712, (208) 336-1425.

Lee S. Sherline, 207 Park Avenue, Suite 101, Falls Church, VA 22046, (703) 536-5401.

i. *FERC Contact*: Ms. Deborah Frazier-Stutely (202) 219-2842.

j. *Description of Project*: The proposed project would consist of: (1) An earth lined side channel turnout intake at elevation 2,945 feet msl; (2) a 20-foot-deep, 640-foot-long unlined canal; (3) a 19-foot-high, 150-foot-long unlined cancel; (3) a 19-foot-high, 150-foot-long reinforced concrete road under-crossing; (4) a 1,050-foot-long, 35-foot-wide concrete lined canal at elevation 2,945 feet msl; (5) a 98-foot-wide, 39-foot-long reinforced concrete powerhouse containing two generating units with a total capacity of 3,100 kW, operating under a head of 18 feet; (6) a switchyard; (7) a 1,300-foot-long, 20-foot-wide access road; (8) a 46-kV, 600-foot-long transmission line tying into the existing Idaho Power Company's Buhl substation; and (9) related facilities.

The proposed project would produce approximately 18.8 GWH of energy annually.

k. In accordance with section 4.32(b)(7) of the Commission's regulations, if any resource agency, Indian Tribe, or person believes that an additional scientific study should be conducted in order to form an adequate, factual basis for a complete analysis of this application on its merits, they must file a request for the study with the Commission, together with justification for such request, no later than October 16, 1992, and must serve a copy of the request on the applicant.

Lois D. Cashell,

Secretary.

[FR Doc. 92-21516 Filed 9-4-92; 8:45 am]

BILLING CODE 6717-01-M

DEPARTMENT OF ENERGY

[Project Nos. 710-000, et al.]

Hydroelectric Applications (Wisconsin Power and Light Company, et al.); Applications

Take notice that the following hydroelectric applications have been filed with the Commission and are available for public inspection:

1a. *Type of Applications* Subsequent License.

b. *Project No.:* 710-000.

c. *Date Filed:* November 8, 1976.

d. *Applicant:* Wisconsin Power and Light Company.

e. *Name of Project:* Shawano Hydro Project.

f. *Location:* On the Wolf River, Shawano County, Wisconsin.

g. *Filed Pursuant to:* Federal Power Act 16 U.S.C. 791(a)–825(r).

h. *Applicant Contact:* Mr. James D. Loock, Director, Generating Station Engineering, WPLC, 222 West Washington Avenue, Box 192, Madison, WI 53701–0192, (608) 252–3311.

i. *FERC Contact:* Ed Lee (dt) (202) 219–2809.

j. *Deadline Date:* October 27, 1992.

k. *Status of Environmental Analysis:* This application is ready for environmental analysis at this time—see attached paragraph D5.

l. *Description of Project:* The existing operating project was issued an initial license on July 19, 1977. The project is currently operating under an annual license until a new license is issued. The licensee has applied for a new license and proposes no major modifications to the licensed project. The existing project consists of: (1) a reinforced concrete dam about 150-foot-long and 20-foot-high, with two earthen embankments and a concrete spillway section with six steel taintor gates, 14-feet by 14-feet; (2) a reservoir having a surface area of 195 acres; (3) a powerhouse containing one 640-kW generating unit; and (4) appurtenant facilities. The project would have an average annual generation of 3,810 MWh. The licensee owns the dam and all project related structures.

m. *Purpose of Project:* All project energy generated would be utilized by the applicant for sale to its customers.

n. *This notice also consists of the following standard paragraphs:* D5.

o. *Available Locations of Application:* A copy of the application, as amended and supplemented, is available for inspection and reproduction at the Commission's Public Reference and Files Maintenance Branch, located at 941 North Capitol Street, N.E., Room 3104, Washington, D.C. 20426, or by calling (202) 208–1371. A copy is also available for inspection and reproduction at the Office of Mr. James D. Loock, Director, Generating Station Engineering, WPLC, 222 West Washington Avenue, Madison, WI 53701–0192, (608) 252–3311.

2a. *Type of Applications:* New License.

b. *Project No.:* 2239–004.

c. *Date Filed:* July 31, 1991.

d. *Applicant:* Tomahawk Power & Pulp Company.

e. *Name of Project:* Kings Dam Project.

f. *Location:* On the Wisconsin River, Lincoln County, Wisconsin.

g. *Filed Pursuant to:* Federal Power Act, 16 U.S.C. 791(a)–825(r).

h. *Applicant Contact:* Mr. John L. Laughlin, Tomahawk Power & Pulp Company, 610 Jackson Street, Wausau, WI 54401, (715) 453–5376.

i. *FERC Contact:* Michael Dees (202) 219–2807.

j. *Deadline Date:* November 2, 1992.

k. *Status of Environmental Analysis:* This application is not ready for environmental analysis at this time—see attached standard paragraph E.

l. *Description of Project:* The project structures consist of earth dikes, a powerhouse, and a tainter gate spillway. Earth dikes on each side of the concrete powerhouse/spillway structure, constructed of poorly graded sands and gravelly sands, are up to 30 feet high and have a total length of 1,190 feet. The 190.6 foot wide powerhouse/spillway structure includes three 20-foot-wide by 15-foot-high tainter gates and four 22.5-foot-wide intake bays. Three of the intakes are equipped with twin horizontal turbines (two are connected to 800–kW generators). The fourth intake is equipped with a vertical turbine connected to a 300–kW generator. The applicant proposes to add a 800–kW generator to the third twin horizontal turbine. At the normal project head water elevation of 1,458.4 feet, the reservoir surface area is 1,420 acres and the storage volume is 18,200 acre feet. Normal head on the turbines is 23 feet.

The existing project would also be subject to Federal takeover under Sections 14 and 15 of the Federal Power Act.

m. *Purpose of Project:* The purpose of the project is to generate electric power for sale to Wisconsin Public Service Corporation.

n. This notice also consists of the following standard paragraphs: B1 and E.

o. Available Location of Application: A copy of the application, as amended and supplemented, is available for inspection and reproduction at the Commission's Public Reference and Files Maintenance Branch, located at 941 North Capitol Street, NE., room 3104, Washington, DC, 20426, or by calling (202) 208–1371. A copy is also available for inspection and reproduction at Tomahawk Power & Pulp Company, 610 Jackson Street, Wausau, WI 54401, (715) 453–5376.

3a. *Type of Application:* New License.

b. *Project No.:* 2334–001.

c. *Date Filed:* December 23, 1991.

d. *Applicant:* Western Massachusetts Electric Company.

e. *Name of Project:* Gardners Falls Project.

f. *Location:* On the Deerfield River, Franklin County, Massachusetts.

g. *Filed Pursuant to:* Federal Power Act, 16 U.S.C. 791(a)–825(r).

h. *Applicant Contact:* Mr. R.A. Reckert, Western Massachusetts Electric Company, P.O. Box 270, Hartford, CT 06141–0270, (203) 665–5315.

i. *FERC Contact:* Michael Dees (202) 219–2807.

j. *Deadline Date:* November 5, 1992.

k. *Status of Environmental Analysis:* This application is not ready for environmental analysis at this time—see attached standard paragraph E.

l. *Description of Project:* The project structures consist of a dam and impoundment, a power canal, powerhouse, tailrace, and appurtenant facilities. Applicant proposes to operate the project at the same electric capacity (3.48 MW) and in the same general manner as it has prior to relicensing. The proposed average annual generating capacity is 15,740 MWH (existing capacity is 16,600 MHW) using the four existing active turbines and a hydraulic capacity of 1,420 cfs.

Applicant proposes to operate the project in a similar manner, except that they now propose to release a continuous minimum flow of 50 cfs (no minimum flow at this time), or inflow if less, at all times to enhance the available fish habitat in the bypassed reach below the dam.

In detail, the project components are described as follows:

(1) A concrete gravity dam with an ogee type spillway and masonry abutments. The dam is 337 feet long with a maximum height of 30 feet. Permanent crest elevation is 332.79 feet msl with flash board elevation of 334.79 feet msl. The resulting impoundment is 3,200 feet long with approximately 21 acres of surface area at normal full pond. The impoundment has 190 acre-feet of gross storage and 37.2 acre-feet of usable storage.

(2) A brick and concrete powerhouse equipped with four active turbines with a) a rated capacity of 3.58 MW, b) a

hydraulic capacity of 1,420 cfs and a proposed average annual generation of 15,740 MWH (16,600 MWH existing), and c) a gross head of 38.1 feet.

(3) A 1300 foot power canal 31 feet wide and 15 feet deep.

(4) A double circuit 13.8 kV transmission line which extends over the river at the tailrace. The transmission line connects the Gardners Falls project to the Montague substation. However, WMECO states that the line is not part of this project.

The existing project would also be subject to Federal takeover under sections 14 and 15 of the Federal Power Act.

m. *Purpose of Project:* The purpose of the project is to generate electric energy for sale to applicant's customers.

n. This notice also consists of the following standard paragraphs: B1 and E.

o. *Available Location of Application:* A copy of the application, as amended and supplemented, is available for inspection and reproduction at the Commission's Public Reference and Files Maintenance Branch, located at 941 North Capitol Street, NE., room 3104, Washington, DC 20426, or by calling (202) 208–1371. A copy is also available for inspection and reproduction at Western Massachusetts Electric Company, Hartford, CT 06141–0270.

4a. *Type of Application:* New Major License.

b. *Project No.:* 2390–002.

c. *Date Filed:* December 16, 1992.

d. *Applicant:* Northern States Power Company-Wisconsin.

e. *Name of Project:* Big Falls.

f. *Location:* On the Flambeau River near Big Falls in Rusk County, Wisconsin.

g. *Filed Pursuant to:* Federal Power Act, 16 U.S.C. 791(a)–825(r).

h. *Applicant Contact:* Mr. Anthony G. Schuster, 100 North Barstow Street, P.O. Box 8, Eau Claire, WI 54702, (715) 839–2621.

i. *FERC Contact:* Ms. Julie Bernt, (202) 219–2814.

j. *Deadline Date:* November 2, 1992.

k. *Status of Environmental Analysis:* This application has been accepted for filing but is not ready for environmental analysis at this time—see attached paragraph E.

l. *Description of Project:* The licensed project would consist of the following existing facilities: (1) A 22-foot-high earth embankment dam; (2) a 320-foot concrete spillway; (3) a reservoir with a surface area of 370 acres at surface elevation 1,234 feet msl and a storage area of 6,500 acre-feet; (4) a powerhouse containing three generating units with a total rated capacity of 7.78 MW; and, appurtenant facilities. The applicant is proposing no changes to the project. The average annual net energy generation is 37,318,036 kWh. The applicant owns all the existing project facilities.

The existing project would also be subject to Federal takeover under sections 14 and 15 of the Federal Power Act.

m. *Purpose of Project:* Project power would be utilized by the applicant for sale to its customers.

n. This notice also consists of the following standard paragraphs: B1 and E.

5a. *Type of Application:* New Major License.

b. *Project No.:* 2522–002.

c. *Date Filed:* December 18, 1991.

d. *Applicant:* Wisconsin Public Service Corporation.

e. *Name of Project:* Johnson Falls.

f. *Location:* On the Peshtigo River near Stephenson in Marinette County, Wisconsin.

g. *Filed Pursuant to:* Federal Power Act, 16 U.S.C. 791(a)–825(r).

h. *Applicant Contact:* Mr. R.A. Krueger, 700 North Adams Street, P.O. Box 19002, Green Bay, WI 54307–9002, (414) 433–1268.

i. *FERC Contact:* Ms. Julie Bernt, (202) 219–2814.

j. *Deadline Date:* November 5, 1992.

k. *Status of Environmental Analysis:* This application has been accepted for filing but is not ready for environmental analysis at this time—see attached paragraph E.

l. *Description of Project:* The licensed project would consist of the following existing facilities: (1) a 188-foot-long earth embankment dam; (2) a 141-foot long concrete spillway; (3) a reservoir with a surface area of 130.5 acres at surface elevation 813.8 feet NGVD and a storage area of 65 acre-feet; (4) a powerhouse containing two generating units with a total rated capacity of 3,520 kW; and, (5) appurtenant facilities. The applicant is proposing no changes to the project. The average annual net energy generation is 11,874 MWh. The applicant owns all the existing project facilities.

The existing project would also be subject to Federal takeover under Sections 14 and 15 of the Federal Power Act.

m. *Purpose of Project:* Project power would be utilized by the applicant for sale to its customers.

n. This notice also consists of the following standard paragraphs: B1 and E.

6a. *Type of Application:* New Major License.

b. *Project No.:* 2533–006.

c. *Date Filed:* December 26, 1991.

d. *Applicant:* Potlatch Corporation.

e. *Name of Project:* Brainerd Hydroelectric Project.

f. *Location:* On the Mississippi River in the city of Brainerd in Crow Wing County, Minnesota.

g. *Filed Pursuant to:* Federal Power Act 16 U.S.C. 791(a)–825(r).

h. *Applicant Contact:* Mr. Glenn R. Koepp, Mead & Hunt, Inc., 6501 Watts Road, Suite 101, Madison, Wisconsin 53719, (608) 273–6380.

i. *FERC Contact:* Michael Strzelecki at (202) 219–2827.

j. *Comment Date:* October 19, 1992.

k. *Status of Environmental Analysis:* This application is ready for environmental analysis at this time—see attached paragraph D6.

l. *Description of Project:* The run-of-river project consists of: (1) a 25-foot-high L-shaped dam; (2) a 2,500-acre impoundment; (3) a powerhouse containing five generating units with a total installed capacity of 3,342 kW; (4) a short transmission line extending from the powerhouse to three 500-kVA, 2,400/480-volt step-down transformers; and (5) appurtenant facilities.

The Applicant is not proposing any changes to the existing project works as licensed. The Applicant estimates the average annual generation from this project to be 18,291 MWh.

m. *Purpose of Project:* All project energy generated would be utilized by the applicant.

n. This notice also consists of the following standard paragraphs: B1 and D6.

7a. *Type of Application:* New Major License.

b. *Project No.:* 2546–001.

c. *Date Filed:* December 19, 1991.

d. *Applicant:* Wisconsin Public Service Corporation.

e. *Name of Project:* Sandstone Rapids.

f. *Location:* On the Peshtigo River near Stephenson in Marinette County, Wisconsin.

g. *Filed Pursuant to:* Federal Power Act, 16 U.S.C. 791(a)–825(r).

h. *Applicant Contact:* Mr. R.A. Krueger, 700 North Adams Street, P.O. Box 19002, Green Bay, WI 54307–9002, (414) 433–1268.

i. *FERC Contact:* Ms. Julie Bernt, (202) 219–2814.

j. *Deadline Date:* November 5, 1992.

k. *Status of Environmental Analysis:* This application has been accepted for filing but is not ready for environmental analysis at this time—see attached paragraph E.

l. *Description of Project:* The licensed project would consist of the following existing facilities: (1) A 420-foot-long earth embankment dam; (2) a 193-foot long concrete spillway; (3) a reservoir

with a surface area of 150 acres at surface elevation 724.1 feet NGVD and a storage area of 50 acre-feet; (4) a powerhouse containing two generating units with a total rated capacity of 3,840 kW; and, (5) appurtenant facilities. The applicant is proposing no changes to the project. The average annual net energy generation is 13,025 MWh. The applicant owns all the existing project facilities.

The existing project would also be subject to Federal takeover under sections 14 and 15 of the Federal Power Act.

m. *Purpose of Project:* Project power would be utilized by the applicant for sale to its customers.

n. This notice also consists of the following standard paragraphs: B1 and E.

8a. *Type of Application:* Subsequent Minor License.

b. *Project No.:* 2560–001.

c. *Date Filed:* December 19, 1991.

d. *Applicant:* Wisconsin Public Service Corporation.

e. *Name of Project:* Potato Rapids.

f. *Location:* On the Peshtigo River near Porterfield in Marinette County, Wisconsin.

g. *Filed Pursuant to:* Federal Power Act, 16 U.S.C. 791(a)–825(r).

h. *Applicant Contact:* Mr. R. A. Krueger, 700 North Adams Street, P.O. Box 19002, Green Bay, WI 54307–9002, (414) 433–1268.

i. *FERC Contact:* Ms. Julie Bernt, (202) 219–2814.

j. *Deadline Date:* November 5, 1992.

k. *Status of Environmental Analysis:* This application has been accepted for filing but is not ready for environmental analysis at this time—see attached paragraph E.

1. *Description of Project:* The licensed project would consist of the following existing facilities: (1) Two existing earth fill dikes, 1,950 feet long and 1,500 feet long, respectively; (2) a 684-foot long non-overflow earth fill dam; (3) a 225-foot-long concrete gated spillway; (4) a reservoir with a surface area of 350 acres at surface elevation 621.5 feet NGVD and a storage area of 322 acre-feet; (5) a powerhouse containing three generating units with a total rated capacity of 2,380 kW; and, (6) appurtenant facilities. The average annual net energy generation is 5,677 MWh. the applicant owns all the existing project facilities.

m. *Purpose of Project:* Project power would be utilized by the applicant for sale to its customers.

n. *This notice also consists of the following standard paragraphs:* B1 and E.

9a. *Type of Application:* Subsequent Minor License.

b. *Project No.:* 2581–003.

c. *Date Filed:* December 19, 1991.

d. *Applicant:* Wisconsin Public Service Corporation.

e. *Name of Project:* Peshtigo.

f. *Location:* On the Peshtigo River near Peshtigo in Marinette County, Wisconsin.

g. *Filed Pursuant to:* Federal Power Act, 16 U.S.C. 791(a)–825(r).

h. *Applicant Contact:* Mr. R. A. Krueger, 700 North Adams Street, P.O. Box 19002, Green Bay, WI 54307–9002, (414) 433–1268.

i. *FERC Contact:* Ms. Julie Bernt, (202) 219–2814.

j. *Deadline Date:* November 5, 1992.

k. *Status of Environmental Analysis:* This application has been accepted for filing but is not ready for environmental analysis at this time—see attached paragraph E.

1. *Description of Project:* The licensed project would consist of the following existing facilities: (1) A 20-foot-high concrete gravity dam; (2) a 20-foot-high, 60-foot-long concrete spillway; (3) a reservoir with a surface area of 460 acres at surface elevation 603 NGVD and a storage area of 460 acre-feet; (4) a powerhouse containing two generating units with a total rated capacity of 584 kW; and (5) appurtenant facilities. The average annual net energy generating is 3,534 MWh. The applicant is proposing no changes to the project. The applicant owns all the existing project facilities.

m. *Purpose of Project:* Project power would be utilized by the applicant for sale to its customers.

n. *This notice also consists of the following standard paragraphs:* B1 and E.

10a. *Type of Application:* Subsequent License. (see 18 CFR 16.2(e) for definition)

b. *Project No:* 2607–001.

c. *Date Filed:* December 18, 1991.

d. *Applicant:* Duke Power Company.

e. *Name of Project:* Spencer Mountain Project.

f. *Location:* On the South Fork Catawba River in Gaston County, North Carolina, near the town of Gastonia.

g. *Filed Pursuant to:* Federal Power Act, 16 U.S.C. 791(a)–825(r).

h. *Applicant Contact:*

John E. Lansche, Esq., Duke Power Company, Legal Department, 422 South Church Street, Charlotte, NC 28242–0001, (704) 382–8125

Steve C. Griffith, Jr., Esq., Duke Power Company, Legal Department, 422 South Church Street, Charlotte, NC 28242–0001, (704) 382–8100.

i. *FERC Contact:* Ms. Deborah Frazier-Stutely, (202) 219–2842.

j. *Comment Date:* October 29, 1992.

k. *Description of Project:* The existing project would consist of: (1) A 12-foot-high, 636-foot-long masonry and rubble low head dam with a crest elevation of 634.7 feet msl; (2) a 68-acre reservoir with a storage capacity of 166 acre-feet, at an elevation of 634.7 feet msl; (3) a 58.9-foot-long canal headworks, consisting of four 6-foot wide wood gates with a crest elevation of 641.9 feet msl; (4) a 53.8-foot-long canal spillway connected to the downstream side of the canal headworks, with a crest elevation of 634.7 feet msl; (5) a 30-foot-wide, 10-foot-deep, 3,644-foot-long open earthen canal; (6) a 32-foot-wide trashrack at powerhouse forebay; (7) a 36-inch-diameter bypass pipe; (8) a 22.5-foot-high, 49.5-foot-long powerhouse containing two Francis-type turbines and horizontal generators each with a capacity of 320 kilowatts each, totaling 640 kilowatts; (8) a concrete lined tailrace discharging flows back into the South Fork Catawba River; (9) two substations containing a 2.3/44-kV transformer; (10) a 3,300-foot-long, 44-kV transmission line tying into an existing line; and (11) related facilities.

The project generates on an average 2,581,000 kilowatthours of energy annually.

m. *Purpose of Project:* Project power is utilized by the Rutherford Electric Membership Cooperation, the city of Gastonia, and the applicant's customers.

n. *This notice also consists of the following standard paragraphs: B1, E:*

o. *Available Locations of Applications:* A copy of the application, as amended and supplemented, is available for inspection and reproduction at the Commission's Public Reference and Files Maintenance Branch, located at 941 North Capitol Street, NE., room 3104, Washington, DC 20426, or by calling (202) 208–1371. A copy is also available for inspection and reproduction at the applicant's office (see item (h) above).

11a. *Type of Application:* Minor License.

b. *Project No.:* 10873–002.

c. *Date Filed:* January 17, 1992.

d. *Applicant:* Michael P. O'Brien and Robert A. Davis, III.

e. *Name of Project:* Cullasaja River Project.

f. *Location:* On the Cullasaja River, Macon County, North Carolina.

g. *Filed Pursuant to:* Federal Power Act 16 U.S.C. 791(a)–825(r).

h. *Applicant Contact:* Mr. Michael P. O'Brien, 390 Timber Laurel Lane, Lawrenceville, GA 30243, (404) 995–0891.

i. *FERC Contact:* Mary Golato (dt), (202) 219–2804.

j. *Deadline Date:* November 2, 1992.

k. *Status of Environmental Analysis:* This application has been accepted for filing and is not ready for environmental analysis at this time—see attached paragraph D8.

l. *Description of Project:* The proposed project facilities would consist of: (1) an existing concrete arch dam which has an overall length of 208 feet and a maximum height of 23 feet; (2) a reservoir which has a surface area of about 67 acres and a volume of 462 acre-feet at a normal water surface elevation of 3,606 feet mean sea level; (3) an intake facility with trashracks at the right abutment of the dam; (4) a proposed 3.0-foot-diameter penstock 2,045 feet long; (5) an existing stone masonry powerhouse containing one 900-kilowatt generating unit; (6) a 2.3-kilovolt transmission line about 150 feet long; and (7) appurtenant equipment and facilities.

m. *Purpose of Project:* All project energy generated would be utilized by the applicant for sale to its customers.

n. *This notice also consists of the following standard paragraphs:* A2, A9, B1, and D8.

o. *Available Locations of Application:* A copy of the application is available for inspection and reproduction at the Commission's Public Reference and Files Maintenance Branch, located at 941 North Capitol Street, NE., room 3104, Washington, DC 20426, or by calling (202) 219–1371. A copy is also available for inspection and reproduction at Mr. Michael P. O'Brien or Robert A Davis, III, 390 Timber Laurel Lane, Lawrenceville, GA 30243 (404) 995–0891.

12a. *Type of Application:* Minor License.

b. *Project No.:* 11090–000.

c. *Date Filed:* February 15, 1991.

d. *Applicant:* Tunbridge Mill Corporation.

e. *Name of Project:* Tunbridge Mill Project.

f. *Location:* On the First Branch of the White River, Orange County, Vermont.

g. *Filed Pursuant to:* Federal Power Act, 16 U.S.C. 791(a)–825(r).

h. *Applicant Contact:* Mr. Jay Boeri, RR #1, Box 798, Woodstock, VT 05091, (802) 436–2521.

i. *FERC Contact:* Michael Dees, (202) 219–2807.

j. *Deadline Date:* November 6, 1992.

k. *Status of Environmental Analysis:* This application is ready for environmental analysis at this time—see attached standard paragraph D10.

l. *Description of Project:* The proposed project would consist of: (1) an existing concrete dam 102 feet long and 8.5 feet high and equipped with flashboards two feet high; (2) an existing reservoir with a surface area of 2.5 acres; (3) a proposed penstock 4.5 feet in diameter and 187 feet long; (4) an existing brick and timber powerhouse containing a 100-kW hydropower unit; (5) an existing tailrace 20 feet long; (6) a proposed 7.2-kV buried transmission line 80 feet long; and (7) appurtenant facilities. The estimated annual energy production is 370 MWh. Project energy would be sold to a local utility.

m. *This notice also consists of the following standard paragraphs:* A4, and D10.

n. *Available Locations of Application:* A copy of the application, as amended and supplemented, is available for inspection and reproduction at the Commission's Public Reference and Files Maintenance Branch, located at 941 North Capitol Street, NE., room 3104, Washington, DC 20426, or by calling (202) 208–1371.

13a. *Type of application:* Preliminary Permit.

b. *Project No.:* 11311–000.

c. *Date Filed:* July 17, 1992.

d. *Applicant:* TS Hydro.

e. *Name of Project:* TS Ranch Hydro Project.

f. *Location:* Partially on lands administered by the Bureau of Land Management approximately 30 miles northeast of Battle Mountain in Lander and Eureka Counties, Nevada. T35/36N, R49/50E.

g. *Filed Pursuant to:* Federal Power Act, 16 U.S.C. 791(a)–825(r)

h. *Applicant Contact:* Mr. Robert Rebholtz, Jr., TS Hydro, 1555 Shoreline Drive, 3rd Floor, Boise, Idaho 83702, (208) 338–2500.

i. *FERC Contact:* Mr. Michael Strzelecki, (202) 219–2827.

j. *Comment Date:* October 23, 1992.

k. *Description of Project:* The proposed project would include two developments. The first development would utilize the water drained from the Goldstrike open pit mine and would consist of: (1) An intake structure located near the point of discharge of water pumped from the mine; (2) a 13,000-foot-long, 54-inch-diameter buried steel pipeline; (3) a powerhouse containing one generating unit with a total installed capacity of 2,500 kW; (4) a tailrace returning water to the applicant's existing Boulder Valley Reservoir; and (5) a 13,000-foot-long transmission line interconnecting with an existing Sierra Pacific Power Company transmission line near the Goldstrike mine.

The second development would consist of: (1) The applicant's two existing 35-foot-high earthen dams and 10,887-acre-foot Boulder Valley Reservoir; (2) the applicant's existing 5-mile-long, 48-inch-diameter pipeline; (3) a powerhouse containing one generating unit with a total installed capacity of 2,000 kW; and (4) a 5-mile-long transmission line interconnecting with the proposed transmission line from the first development.

No new access roads will be needed to conduct the studies. The approximate cost of the studies would be $150,000.

l. *This notice also consists of the following standard paragraphs:* A5, A7, A9, A10, B, C, and D2.

Standard Paragraphs

A2. Development Application—Any qualified applicant desiring to file a competing application must submit to the Commission, on or before the specified deadline date for the particular application, a competing development application, or a notice of intent to file such an application. Submission of a timely notice of intent allows an interested person to file the competing development application no later than 120 days after the specified deadline date for the particular application. Applications for preliminary permits will not be accepted in response to this notice.

A4. Development Application—Public notice of the filing of the initial development application, which has already been given, established the due date for filing competing applications or notices of intent. Under the Commission's regulations, any competing development application must be filed in response to and in compliance with public notice of the initial development application. No competing applications or notices of intent may be filed in response to this notice.

A5. Preliminary Permit—Anyone desiring to file a competing application for preliminary permit for a proposed project must submit the competing application itself, or a notice of intent to file such an application, to the Commission on or before the specified comment date for the particular application (see 18 CFR 4.36). Submission of a timely notice of intent allows an interested person to file the competing preliminary permit application no later than 30 days after the specified comment date for the particular application. A competing preliminary permit application must conform with 18 CFR 4.30(b) (1) and (9) and 4.36.

A7. Preliminary Permit—Any qualified development applicant desiring to file a competing development application must submit to the Commission, on or before a specified comment date for the particular application, either a

competing development application or a notice of intent to file such an application. Submission of a timely notice of intent to file a development application allows an interested person to file the competing application no later than 120 days after the specified comment date for the particular application. A competing license application must conform with 18 CFR 4.30 (b) (1) and (9) and 4.36.

A9. Notice of intent—A notice of intent must specify the exact name, business address, and telephone number of the prospective applicant, and must include an unequivocal statement of intent to submit, if such an application may be filed, either a preliminary permit application or a development application (specify which type of application). A notice of intent must be served on the applicant(s) named in this public notice.

A10. Proposed Scope of Studies under Permit—A preliminary permit, if issued, does not authorize construction. The term of the proposed preliminary permit with be 36 months. The work proposed under the preliminary permit would include economic analysis, preparation of preliminary engineering plans, and a study of environmental impacts. Based on the results of these studies, the Applicant would decide whether to proceed with the preparation of a development application to contract and operate the project.

B. Comments, Protests, or Motions to Intervene—Anyone may submit comments, a protest, or a motion to intervene in accordance with the requirements of the Rules of Practice and Procedure, 18 CFR 385.210, .211, .214. In determining the appropriate action to take, the Commission will consider all protests or other comments filed, but only those who file a motion to intervene in accordance with the Commission's Rules may become a party to the proceeding. Any comments, protests, or motions to intervene must be received on or before the specified comment date for the particular application.

B1. Protests or Motions to Intervene—Anyone may submit a protest or a motion to intervene in accordance with the requirements of Rules of Practice and Procedure, 18 CFR 385.210, 385.211, and 385.214. In determining the appropriate action to take, the Commission will consider all protests filed, but only those who file a motion to intervene in accordance with the Commission's Rules may become a party to the proceeding. Any protests or motions to intervene must be received on or before the specified deadline date for the particular application.

C. Filing and Service of Responsive Documents—Any filings must bear in all capital letters the title "COMMENTS", "NOTICE OF INTENT TO FILE COMPETING APPLICATION", "COMPETING APPLICATION", "PROTEST", "MOTION TO INTERVENE", as applicable, and the Project Number of the particular application to which the filing refers. Any of the above-named documents must be filed by providing the original and the number of copies provided by the Commission's regulations to: The Secretary, Federal Energy Regulatory Commission, 825 North Capitol Street, NE., Washington, DC 20426. An additional copy must be sent to Director, Division of Project Review, Federal Energy Regulatory Commission, room 1027, at the above-mentioned address. A copy of any notice of intent, competing application or motion to intervene must also be served upon each representative of the Applicant specified in the particular application.

D2. Agency Comments—Federal, state, and local agencies are invited to file comments on the described application. A copy of the application may be obtain by agencies directly from the Applicant. If an agency does not file comments within the time specified for filing comments, it will be presumed to have no comments. One copy of an agency's comments must also be sent to the Applicant's representatives.

D5. Filing and Service of Responsive Documents—The application is ready for environmental analysis at this time, and the Commission is requesting comments, reply comments, recommendations, terms and conditions, and prescriptions.

The Commission directs, pursuant to section 4.34(b) of the regulations (see Order No. 533 issued May 8, 1991, 56 FR 23108, May 20, 1991) that all comments, recommendations, terms and conditions and prescriptions concerning the application be filed with the Commission within 60 days from the issuance date of this notice. (October 27, 1992 for Project No. 710–000). All reply comments must be filed with the Commission within 105 days from the date of this notice. (December 11, 1992 for Project No. 710–000).

Anyone may obtain an extension of time for these deadlines from the Commission only upon a showing of good cause or extraordinary circumstances in accordance with 18 CFR 385.2008.

All filings must (1) bear in all capital letters are title "PROTEST", "MOTION TO INTERVENE", "COMMENTS," "REPLY COMMENTS," "RECOMMENDATIONS," "TERMS AND CONDITIONS," or "PRESCRIPTIONS;" (2) set forth in the heading the name of the applicant and the project number of the application to which the filing responds; (3) furnish the name, address, and telephone number of the person protesting or intervening; and (4) otherwise comply with the requirements of 18 CFR 385.2001 through 385.2005. All comments, recommendations, terms and conditions or prescriptions must set forth their evidentiary basis and otherwise comply with the requirements of 18 CFR 4.34(b). Agencies may obtain copies of the application directly from the applicant. Any of these documents must be filed by providing the original and the number of copies required by the Commission's regulations to: The Secretary, Federal Energy Regulatory Commission, 825 North Capitol Street, NE., Washington, DC 20426. An additional copy must be sent to Director, Division of Project Review, Office of Hydropower Licensing, Federal Energy Regulatory Commission, room 1027, at the above address. A copy of any protest or motion to intervene must be served upon each representative of the applicant specified in the particular application. A copy of all other filings in reference to this application must be accompanied by proof of service on all persons listed in the service list prepared by the Commission in this proceeding, in accordance with 18 CFR 4.34(b) and 385.2010.

D6. Filing and Service of Responsive Documents—The application is ready for environmental analysis at this time, and the Commission is requesting comments, rely comments, recommendations, terms and conditions, and prescriptions.

The Commission directs, pursuant to section 4.34(b) of the regulations (see Order No. 533 issued May 8, 1991, 56 FR 23108, May 20, 1991) that all comments, recommendations, terms and conditions and prescriptions concerning the application be filed with the Commission within 60 days from the issuance date of this notice. (October 19, 1992 for Project No. 2533–006). All reply comments must be filed with the Commission within 105 days from the date of this notice. (December 1, 1992 for Project No. 2533–006).

Anyone may obtain an extension of time for these deadlines from the Commission only upon a showing of good cause or extraordinary circumstances in accordance with 18 CFR 385.2008.

All filings must (1) bear in all capital letters the title "PROTEST", "MOTION TO INTERVENE", "COMMENTS,"

"REPLY COMMENTS," "RECOMMENDATIONS," "TERMS AND CONDITIONS," or "PRESCRIPTIONS;" (2) set forth in the heading the name of the applicant and the project number of the application to which the filing responds; (3) furnish the name, address, and telephone number of the person protesting or intervening; and (4) otherwise comply with the requirements of 18 CFR 385.2001 through 385.2005. All comments, recommendations, terms and conditions or prescriptions must set forth their evidentiary basis and otherwise comply with the requirements of 18 CFR 4.34(b). Agencies may obtain copies of the application directly from the applicant. Any of these documents must be filed by providing the original and the number of copies required by the Commission's regulations to: The Secretary, Federal Energy Regulatory Commission, 825 North Capitol Street, NE., Washington, DC. 20426. An additional copy must be sent to Director, Division of Project Review, Office of Hydropower Licensing, Federal Energy Regulatory Commission, Room 1027, at the above address. A copy of any protest or motion to intervene must be served upon each representative of the applicant specified in the particular application. A copy of all other filings in reference to this application must be accompanied by proof of service on all persons listed in the service list prepared by the Commission in this proceeding, in accordance with 18 CFR 4.34(b) and 385.2010.

D8. Filing and Service of Responsive Documents—The application is not ready for environmental analysis at this time; therefore, the Commission is not now requesting comments, recommendations, terms and conditions, or prescriptions.

When the application is ready for environmental analysis, the Commission will issue a public notice requesting comments, recommendations, terms and conditions, or prescriptions.

All filings must (1) bear in all capital letters the title "PROTEST" or "MOTION TO INTERVENE", "NOTICE OF INTENT TO FILE COMPETING APPLICATION," or "COMPETING APPLICATION; (2) set forth in the heading the name of the applicant and the project number of the application to which the filing responds; (3) furnish the name, address, and telephone number of the person protesting or intervening; and (4) otherwise comply with the requirements of 18 CFR 385.2001 through 385.2005. Agencies may obtain copies of the application directly from the applicant.

Any of these documents must be filed by providing the original and the number of copies required by the Commission's regulations to: The Secretary, Federal Energy Regulatory Commission, 825 North Capitol Street, NW., Washington, DC 20426. An additional copy must be sent to Director, Division of Project Review, Office of Hydropower Licensing, Federal Energy Regulatory Commission, Room 1027, at the above address. A copy of any protest or motion to intervene must be served upon each representative of the applicant specified in the particular application.

D10. Filing and Service of Responsive Documents—The application is ready for environmental analysis at this time, and the Commission is requesting comments, reply comments, recommendations, terms and conditions, and prescriptions.

The Commission directs, pursuant to section 4.34(b) of the regulations (see Order No. 533 issued May 8, 1991, 56 FR 23108, May 20, 1991) that all comments, recommendations, terms and conditions and prescriptions concerning the application be filed with the Commission within 60 days from the issuance date of this notice. (October 27, 1992 for Project No. 11090–000). All reply comments must be filed with the Commission within 105 days from the date of this notice. (December 11, 1992 for Project No. 11090–000).

Anyone may obtain an extension of time for these deadlines from the Commission only upon a showing of good cause or extraordinary circumstances in accordance with 18 CFR 385.2008.

All filings must (1) bear in all capital letters the title "COMMENTS", "REPLY COMMENTS", "RECOMMENDATIONS", "TERMS AND CONDITIONS," or "PRESCRIPTIONS;" (2) set forth in the heading the name of the applicant and the project number of the application to which the filing responds; (3) furnish the name, address, and telephone number of the person submitting the filing; and (4) otherwise comply with the requirements of 18 CFR 385.2001 through 385.2005. All comments, recommendations, terms and conditions or prescriptions must set forth their evidentiary basis and otherwise comply with the requirements of 18 CFR 4.34(b). Agencies may obtain copies of the application directly from the applicant. Any of these documents must be filed by providing the original and the number of copies required by the Commission's regulations to: The Secretary, Federal Energy Regulatory Commission, 825 North Capitol Street, NE., Washington, DC 20426. An additional copy must be sent to Director, Division of Project Review, Office of Hydropower Licensing, Federal Energy Regulatory Commission, Room 1027, at the above address. Each filing must be accompanied by proof of service on all persons listed on the service list prepared by the Commission in this proceeding, in accordance with 18 CFR 4.34(b), and 385.2010.

E. Filing and Service of Responsive Documents—The application is not ready for environmental analysis at this time; therefore, the Commission is not now requesting comments, recommendations, terms and conditions, or prescriptions.

When the application is ready for environmental analysis, the Commission will notify all persons on the service list and affected resource agencies and Indian tribes. If any person wishes to be placed on the service list, a motion to intervene must be filed by the specified deadline date herein for such motions. All resource agencies and Indian tribes that have official responsibilities that may be affected by the issues addressed in this proceeding, and persons on the service list will be able to file comments, terms and conditions, and prescriptions within 60 days of the date the Commission issues a notification letter that the application is ready for an environmental analysis. All reply comments must be filed with the Commission within 105 days from the date of that letter.

All filings must (1) bear in all capital letters the title "PROTEST" or "MOTION TO INTERVENE; " (2) set forth in the heading the name of the applicant and the project number of the application to which the filing responds; (3) furnish the name, address, and telephone number of the person protesting or intervening; and (4) otherwise comply with the requirements of 18 CFR 385.2001 through 385.2005. Any of these documents must be filed by providing the original and the number of copies required by the Commission's regulations to: The Secretary, Federal Energy Regulatory Commission, 825 North Capitol Street, NE., Washington, DC 20426. An additional copy must be sent to Director, Division of Project Review, Office of Hydropower Licensing, Federal Energy Regulatory Commission, Room 1027, at the above address. A copy of any protest or motion to intervene must be served upon each representative of the applicant specified in the particular application.

Dated: September 1, 1992, Washington, DC.

Lois D. Cashell,

Secretary.

[FR Doc. 92–21520 Filed 9–4–92; 8:45 am]

BILLING CODE 6717–01–M

Application Filed With the Commission

September 1, 1992.

Take notice that the following hydroelectric application has been filed with the Federal Energy Regulatory Commission and is available for public inspection.

a. *Type of Application:* Major License.

b. *Project No.:* 10903–001.

c. *Date Filed:* June 29, 1992.

d. *Applicant:* L.B. Industries, Inc.

e. *Name of Project:* Kanaka Rapids Hydroelectric Project.

f. *Location:* On the Snake River at river mile 592 (near Kanaka Rapids) in Twin Falls and Gooding Counties, Idaho, near the town of Buhl. Section 3 and 10, T.9S., R.14E, Boise Meridian.

g. *Filed Pursuant to:* Federal Power Act, 16 U.S.C. 791(a)–825(r).

h. *Applicant Contact:*

L.B. Industries, Inc., c/o Larry Falkner, 1401 Shoreline Drive, P.O. Box 2797, Boise, ID 83701, (208) 345–7515.

Carl L. Myers, P.E., Myers Engineering Company, PA, 750 Warm Springs Avenue, Boise, ID 83712, (208) 336–1425.

Lee S. Sherline, 207 Park Avenue, 101, Falls Church, VA 22046, (703) 536–5401.

i. *FERC Contact:* Ms. Deborah Frazier-Stutely, (202) 219–2842.

j. *Description of Project:* The proposed project would consist of: (1) A side channel turnout intake at elevation 2,917 feet msl; (2) a 20-foot-deep, 800-foot-long unlined canal; (3) a 19-foot-deep, 1,450-foot-long concrete lined canal at elevation 2,920 feet msl; (4) a 160-foot-long ogee spillway with a crest elevation of 2,920.5 feet msl; (5) a 92-foot-wide, 39-foot-long reinforced concrete powerhouse containing two generating units with a total capacity of 6,300 kW, operating under a head of 25 to 28 feet; (6) a switchyard; (7) a 138-kV, 4,600-foot-long transmission line, tying into the Idaho Power Company's Upper Salmon Cliff line; and (8) related facilities.

The proposed project would produce approximately 40.9 GWh of energy annually.

k. In accordance with § 4.32(b)(7) of the Commission's regulations, if any resource agency, Indian Tribe, or person believes that an additional scientific study should be conducted in order to form an adequate, factual basis for a complete analysis of this application on its merits, they must file a request for the study with the Commission, together with justification for such request, no later than October 16, 1992, and must serve a copy of the request on the applicant.

Lois D. Cashell,

Secretary.

[FR Doc. 92–21515 Filed 9–4–92; 8:45 am]

BILLING CODE 6717–01–M

Application Filed With the Commission

September 1, 1992.

Take notice that the following hydroelectric application has been filed with the Federal Energy Regulatory Commission and is available for public inspection.

a. *Type of Application:* Major License.

b. *Project No.:* 10772–001.

c. *Date filed:* June 18, 1992.

d. *Application:* Hydro-Power Electric of Nevada, Inc.

e. *Name of Project:* Boulder Rapids Hydroelectric Project.

f. *Location:* On the Snake River at river mile 597.5 in Twin Falls and Gooding Counties Idaho near the town of Buhl. Section 9, T.9S., R.15E., Boise Meridian.

g. *Filed Pursuant to:* Federal Power Act, 16 USC 791(a)–825(r).

h. *Applicant Contact:* Hydro-Power Electric of Nevada, Inc., c/o Robert Jones, 1766 Addison Avenue East, Twin Falls, ID 83301, (208) 733–0404

Lee S. Sherline, 207 Park Avenue, suite 101, Falls Church, VA 22046, (703) 536–5401

L.B. Industries, Inc., c/o Larry Falkner, 1401 Sherline Drive, P.O. Box 2797, Boise, ID 83701, (208) 345–7515

Carl L. Meyers, P.E., Myers Engineering Company, P.A., 750 Warm Springs Avenue, Boise, ID 83712, (208) 336–1425

i. *FERC Contact:* Ms. Deborah Frazier-Stutely (202) 219–2842.

j. *Description of Project:* The proposed project would consist of: (1) A side channel turnout intake with a wetland peninsula extending 320 feet into the Snake River at elevation 2,967 feet msl; (2) a 14-foot-deep, 2,331-foot-long partially lined canal at elevation 2,966 feet msl; (3) a 20-foot-wide spillway; (4) a 92-foot-wide, 39-foot-long powerhouse containing two generating units with an installed capacity of 4,900 kW, operating under a head of 16 to 24 feet; (5) 30-foot-long concrete and riprap tailrace; (6) a switchyard; (7) a 138-kV, 2,200-foot-long transmission line tying into the existing Idaho Power Company's Upper Salmon Cliff line; and (8) related facilities.

The project would generate approximately 25.5 GWH of energy annually.

k. In accordance with § 4.32(b)(7) of the Commission's regulations, if any resource agency, Indian Tribe, or person believes that an additional scientific study should be conducted in order to form an adequate, factual basis for a complete analysis of this application on its merits, they must file a request for the study with the Commission, together with justification for such request, no later than October 16, 1992, and must serve a copy of the request on the applicant.

Lois D. Cashell,

Secretary.

[FR Doc. 92–21514 Filed 9–4–92; 8:45 am]

BILLING CODE 6717–01–M

[Docket Nos. CI92–76–000, et al.]

Sioux Pointe Inc., et al.; Natural Gas Certificate Filings

Take notice that the following filings have been made with the Commission:

1. Sioux Pointe Inc.

[Docket No. CI92–76–000]

August 28, 1992.

Take notice that on August 24, 1992, Sioux Pointe Inc. (Sioux) filed an application under sections 4 and 7 of the Natural Gas Act (NGA) for a blanket certificate with pregranted abandonment authorizing sales in interstate commerce for resale of all categories of natural gas subject to the Commission's NGA jurisdiction. Sioux's application is on file with the Commission and open to public inspection.

Comment date: September 16, 1992, in accordance with Standard Paragraph J at the end of the notice.

2. Northern Natural Gas Company

[Docket No. CP92–674–000]

August 28, 1992.

Take notice that on August 26, 1992, Northern Natural Gas Company (Northern), 1111 South 103rd Street, Omaha, Nebraska 68124, filed in Docket No. CP92–674–000, a request pursuant to § 157.205 of the Commission's Regulations under the Natural Gas Act (18 CFR 157.205) for authorization to abandon and remove fifty-four small volume measuring stations in various states for People's Natural Gas Company, a division of UtiliCorp United Inc. (Peoples) and Southern Union Gas Company (Southern Union) under its blanket certificate issued in Docket No. CP82–401–000 pursuant to section 7 of

the Natural Gas Act, all as more fully set forth in the request that is on file with the Commission and open to public inspection.

Northern states that it has been informed by Peoples and Southern Union that fifty-three of Peoples' end-users and one of Southern Union's end-users have requested the removal of these measuring stations from their property. Northern further states that the measuring stations it proposes to abandon are located in the states of Iowa, Kansas, Minnesota, Nebraska, Oklahoma and South Dakota.

Northern indicates that the appropriate state Commissions are being notified of the abandonments proposed herein by Northern providing each Commission a copy of the subject application.

Comment date: October 13, 1992, in accordance with Standard Paragraph G at the end of this notice.

3. Northern Natural Gas Company

[Docket No. CP92–670–000]

August 28, 1992.

Take notice that on August 24, 1992, Northern Natural Gas Company (Northern), 1111 South 103rd Street, Omaha, Nebraska 68124–1000, filed in Docket No. CP92–670–000 a request pursuant to § 157.205 of the Commission's Regulations under the Natural Gas Act (18 CFR 157.205) for authorization to construct and operate a delivery point for transportation service to the City of Duluth, Minnesota (Duluth), a local distribution company, for redelivery to Northwest Airline's (Northwest) new maintenance facility, under Northern's blanket certificate issued in Docket No. CP82–401–000, all as more fully described in the request which is on file with the Commission and open to public inspection.

Northern requests authorization to install the proposed delivery point, consisting of a tap on Northern's 16-inch Reserve Mining branchline and metering and appurtenant facilities in St. Louis County, Minnesota, to accommodate the delivery of gas to Duluth for Northwest and for other potential commercial and residential customers in the vicinity. It is asserted that Northern would use the facilities for gas transported under its FT–1 and IT–1 Rate Schedules. It is stated that Duluth has requested the new delivery point to accommodate the expansion of its distribution system into new areas. It is asserted that the proposed delivery point would be used to delivery 9,080 Mcf of gas on a peak day, 3,274 Mcf on an average day and 1,195,000 Mcf on an annual basis and that the end uses would be residential, industrial and commercial.

It is further asserted that these volumes are within Duluth's current entitlement from Northern. The cost of the proposed delivery point is estimated at $265,000. Northern states that it would construct, also under its blanket authority in Docket No. CP82–401–000, approximately 1.1 miles of 4-inch pipeline to connect the delivery point proposed herein with Northwest's facility.

Comment date: October 13, 1992, in accordance with Standard Paragraph G at the end of this notice.

4. Panhandle Eastern Pipe Line Company

[Docket No. CP92–665–000]

August 28, 1992.

Take notice that on August 20, 1992, Panhandle Eastern Pipe Line Company (Panhandle), P.O. Box 1642, Houston, Texas 77251–1642, filed in Docket No. CP92–665–000 an application pursuant to section 7(b) of the Natural Gas Act for permission and approval to abandon sales of natural gas to Battle Creek Gas Company (Battle Creek) and Southeastern Michigan Gas Company (SEMCO), both jurisdictional sales customers, all as more fully set forth in the application which is on file with the Commission and open to public inspection.

Panhandle proposes to abandon firm sales to Battle Creek under Panhandle's Rate Schedule LS–1 and to SEMCO under Panhandle's Rate Schedule G–1. It is stated that the proposed abandonments are in response to the customers' election to convert from the existing service to firm sales under Panhandle's Rate Schedule PT-Firm, effective November 1, 1992. Panhandle requests abandonment authority on condition that residual take-or-pay costs and other costs attributable to Battle Creek and Semco are recovered from the two customers. It is asserted that no facilities would be abandoned as a result of the proposal.

Comment date: September 18, 1992, in accordance with the Standard Paragraph F at the end of this notice.

5. Williams Natural Gas Company

[Docket No. CP92–673–000]

August 28, 1992.

Take notice that on August 25, 1992, Williams Natural Gas Company (WNG), P.O. Box 3288, Tulsa, Oklahoma 74101, filed in Docket No. CP92–673–000 a request pursuant to sections 157.205 and 157.216 of the Commission's Regulations under the Natural Gas Act (18 CFR 157.205, 157.216) for authorization to abandon the transportation of natural gas for direct sale to Chevron U.S.A. (Chevron) and to reclaim measuring, regulating and appurtenant facilities located in Osage County, Oklahoma, under WNG's blanket certificate issued in Docket No. CP82–479–000 pursuant to section 7 of the Natural Gas Act, all as more fully set forth in the request that is on file with the Commission and open to public inspection.

WNG states that Hyperion Energy, L.P., has succeeded to Chevron's interest in the gas sales contract and has terminated it effective February 28, 1991. WNG explains that the gas was previously used for waterflood operations and is no longer required. WNG advises that the facilities were originally certificated in Docket No. G–18869, 22 FPC 561 (1959). WMG estimates that the cost of reclaiming the facilities would be $830 and the facilities would have no salvage value.

Comment date: October 13, 1992, in accordance with the Standard Paragraph G at the end of this notice.

6. Florida Gas Transmission Company

[Docket No. CP92–182–002]

August 31, 1992.

Take notice that on August 25, 1992, Florida Gas Transmission Company (FGT), P.O. Box 1188, Houston, Texas 77251–1188, filed in Docket No. CP92–182–002 an application pursuant to sections 7 (b) and (c) of the Natural Gas Act for authorization to construct and operate natural gas pipeline facilities which would enable FGT to provide incremental firm transportation service to the Florida market totaling 541,117 MMBtu per day in the winter season (November-April) and 522,573 MMBtu per day in the summer season (May-October) under new Rate Schedule FTS–2, approval of initial incremental rates and to abandon certain previously certificated facilities, all as more fully set forth in the amendment, which is on file with the Commission and open to public inspection.

In addition to the authorizations originally requested, FGT requests authorization to:

(a) Construct and operate facilities necessary to provide incremental market area transportation service totaling 541,117 MMBtu per day in the winter season (November-April) and 522,573 MMBtu per day in the summer season (May-October) into Florida. The facilities to be constructed and added to the system include approximately 101,500 horsepower of compression; 415.9 miles of 36-inch pipeline, 311.74 miles of 30-inch pipeline, and 39.4 miles of 26-inch pipeline; laterals consisting of

15.3 miles of 22-inch pipeline, 3.1 miles of 20-inch, 10.6 miles of 16-inch, 7 miles of 12-inch, 3 miles of 10-inch, 4.7 miles of 8-inch, 4.3 miles of 6-inch and 0.03 mile of 4-inch pipeline; and additional meter facilities and stations necessary to provide deliveries of volumes of gas at various points off of the FGT system;

(b) Abandon certificated facilities by removal of 66.8 miles of 24-inch mainline loop, and authorization to replace it with 66.8 miles of 36-inch mainline loop (included in the 415.9 miles of 36-inch pipeline reflected in (a) above);

FGT also filed a proposed offer of settlement which, if approved, it states would lead to the withdrawal of Peoples Gas System, Inc. opposition in this proceeding. In addition, the settlement provides for (1) a new allocation of risk; (2) permit rolled-in treatment of future expansions; (3) provide certain rate caps; and (4) two part, incremental rates with a 25-year depreciation life, straight-fixed variable method of classifying and allocating costs and a return on equity of 14 percent.

Comment date: September 21, 1992, in accordance with the first subparagraph of Standard Paragraph F at the end of this notice. All persons who have heretofore filed need not file again.

7. Texas Eastern Transmission Corporation

[Docket No. CP92-664-000]

August 31, 1992.

Take notice that on August 20, 1992, Texas Eastern Transmission Corporation (Texas Eastern), 5400 Westheimer Court, Houston, Texas 77056-5310, filed in Docket No. CP92-664-000 a request pursuant to section 157.205 of the Commission's Regulations under the Natural Gas Act (18 CFR 157.205) for authorization to construct and operate a new delivery point for transportation service for Winnie Pipeline Company (Winnie) under Texas Eastern's blanket certificate issued in Docket No. CP82-535-000, all as more fully described in the request which is on file with the Commission and open to public inspection.

Texas Eastern proposes to construct and operate a 12-inch hot tap to serve as a new delivery point on its system in Jefferson County, Texas. It is stated that the delivery point would be used for the delivery of up to 9,000 Dt equivalent of natural gas per day to Winnie on an interruptible basis pursuant to an agreement dated August 12, 1992, and pursuant to the terms of Texas Eastern's Rate Schedule IT-1. It is stated that Texas Eastern transports natural gas for Winnie under Texas Eastern's blanket certificate issued in Docket No. CP88-136-000. It is asserted that the proposal would have no effect on Texas Eastern's peak day or annual deliveries and that the deliveries can be accomplished without detriment or disadvantage to Texas Eastern's other customers. The construction cost is estimated at $219,000, for which Texas Eastern would be reimbursed by Winnie.

Comment date: October 15, 1992, in accordance with Standard Paragraph G at the end of this notice.

Standard paragraphs

F. Any person desiring to be heard or make any protest with reference to said file with the Federal Energy Regulatory Commission, 825 North Capitol Street, NE., Washington, DC 20426, a motion to intervene or a protest in accordance with the requirements of the Commission's Rules of Practice and Procedure (18 CFR 385.211 and 385.214) and the Regulations under the Natural Gas Act (18 CFR 157.10). All protests filed with the Commission will be considered by it in determining the appropriate action to be taken but will not serve to make the protestants parties to the proceeding. Any person wishing to become a party to a proceeding or to participate as a party in any hearing therein must file a motion to intervene in accordance with the Commission's Rules.

Take further notice that, pursuant to the authority contained in and subject to jurisdiction conferred upon the Federal Energy Regulatory Commission by sections 7 and 15 of the Natural Gas Act and the Commission's Rules of Practice and Procedure, a hearing will be held without further notice before the Commission or its designee on this filing if no motion to intervene is filed within the time required herein, if the Commission on its own review of the matter finds that a grant of the certificate is required by the public convenience and necessity. If a motion for leave to intervene is timely filed, or if the Commission on its own motion believes that a formal hearing is required, further notice of such hearing will be duly given.

Under the procedure herein provided for, unless otherwise advised, it will be unnecessary for the applicant to appear or be represented at the hearing.

G. Any person or the Commission's staff may, within 45 days after the issuance of the instant notice by the Commission, file pursuant to Rule 214 of the Commission's Procedural Rules (18 CFR 385.214) a motion to intervene or notice of intervention and pursuant to section 157.205 of the Regulations under the Natural Gas Act (18 CFR 157.205) a protest to the request. If no protest is filed within the time allowed therefore, the proposed activity shall be deemed to be authorized effective the day after the time allowed for filing a protest. If a protest is filed and not withdrawn within 30 days after the time allowed for filing a protest, the instant request shall be treated as an application for authorization pursuant to section 7 of the Natural Gas Act.

Standard Paragraph

J. Any person desiring to be heard or make any protest with reference to said filings should on or before the comment date file with the Federal Energy Regulatory Commission, 825 North Capitol Street, NE., Washington, DC 20426 a motion to intervene or a protest in accordance with the requirements of the Commission's Rules of Practice and Procedure (18 CFR 385.211, .214). All protests filed with the Commission will be considered by it in determining the appropriate action to be taken but will not serve to make the protestants parties to the proceeding. Any person wishing to become a party in any proceeding herein must file a petition to intervene in accordance with the Commission's rules.

Under the procedure herein provided for, unless otherwise advised, it will be unnecessary for the applicant to appear or be represented at the hearing.

Lois D. Cashell,

Secretary.

[FR Doc. 92-21479 Filed 9-4-92; 8:45 am]

BILLING CODE 6717-01-M

[Docket Nos. ES92-55-000, et al.]

Boston Edison Company, et al.; Electric Rate, Small Power Production, and Interlocking Directorate Filings

August 31, 1992.

Take notice that the following filings have been made with the Commission:

1. Boston Edison Company

[Docket No. ES92-55-000]

Take notice that on August 28, 1992, Boston Edison Company filed an application with the Federal Energy Regulatory Commission under section 204 of the Federal Power Act requesting authorization to issue not more than $350 million of short-term debt securities on or before December 31, 1994, with a final maturity date no later than December 31, 1995.

Comment date: September 28, 1992, in accordance with Standard Paragraph E at the end of this notice.

2. Schuylkill Energy Resources

[Docket No. QF85-720-003]

On August 20, 1992, Schuylkill Energy Resources tendered for filing an amendment to its filing in this docket. No determination has been made that the submittal constitutes a complete filing.

The amendment provides additional information pertaining primarily to the technical data of the cogeneration facility.

Comment date: September 18, 1992, in accordance with Standard Paragraph E at the end of this notice.

Standard Paragraphs

E. Any person desiring to be heard or to protest said filing should file a motion to intervene or protest with the Federal Energy Regulatory Commission, 825 North Capitol Street, NE., Washington, DC 20426, in accordance with Rules 211 and 214 of the Commission's Rules of Practice and Procedure (18 CFR 385.211 and 385.214). All such motions or protests should be filed on or before the comment date. Protests will be considered by the Commission in determining the appropriate action to be taken, but will not serve to make protestants parties to the proceeding. Any person wishing to become a party must file a motion to intervene. Copies of this filing are on file with the Commission and are available for public inspection.

Lois D. Cashell,

Secretary.

[FR Doc. 92-21478 Filed 9-4-92; 8:45 am]

BILLING CODE 6717-01-M

[Docket No. TM93-1-48-000]

ANR Pipeline Company; Notice of Proposed Changes in FERC Gas Tariff

September 1, 1992.

Take notice that ANR Pipeline Company ("ANR") on August 27, 1992, tendered for filing as part of its FERC Gas Tariff, Original Volume Nos. 1, 1-A, 2 and 3, the following tariff sheets to be effective October 1, 1992.

Original Volume No. 1

Sixty-Sixth Revised Sheet No. 18

Original Volume No. 1-A

Eighteenth Revised Sheet No. 6

Original Volume No. 2

Seventeenth Revised Sheet No. 16
Seventeenth Revised Sheet No. 17
Seventeenth Revised Sheet No. 18
Seventeenth Revised Sheet No. 19
Nineteenth Revised Sheet No. 20
Eighteenth Revised Sheet No. 21
Fifteenth Revised Sheet No. 22

Original Volume No. 3

Twelfth Revised Sheet No. 5

ANR states that the above referenced tariff sheets are being filed to adjust its Annual Charge Adjustment ("ACA") rate as permitted by section 17 of its Volume No. 1 Tariff. The revised sheets reflect an ACA rate of $0.0023.

Any person desiring to be heard or to protest said filing should file a motion to intervene or protest with the Federal Energy Regulatory Commission, 825 North Capitol Street, NE., Washington, DC 20426, in accordance with 18 CFR 385.214 and 385.211 of the Commission's Rules and Regulations. All such petitions or protests should be filed on or before September 9, 1992. Protests will be considered by the Commission in determining the appropriate action to be taken, but will not serve to make protestants parties to the proceeding. Any person wishing to become a party must file a motion to intervene. Copies of this filing are on file with the Commission and are available for public inspection in the public reference room.

Lois D. Cashell,

Secretary.

[FR Doc. 92-21480 Filed 9-4-92; 8:45 am]

BILLING CODE 6717-01-M

[Docket No. TM93-1-24-000]

Equitrans, Inc. Notice of Proposed Change in FERC Gas Tariff

September 1, 1992.

Take notice that Equitrans, Inc. (Equitrans), on August 28, 1992, tendered for filing with the Federal Energy Regulatory Commission (Commission) the following tariff sheets to its FERC Gas Tariff, Original Volume Nos. 1 and 3, to become effective October 1, 1992:

Original Volume No. 1

Thirty-Eighth Revised Sheet No. 10
Eleventh Revised Sheet No. 23

Original Volume No. 3

Eleventh Revised Sheet No. 4
Eleventh Revised Sheet No. 8

Pursuant to Order No. 472, the Commission has authorized pipeline companies to track and pass through to their customers their annual charges under an Annual Charge Adjustment (ACA) clause. The 1992 ACA unit surcharge approved by the Commission is $.0023 per Mcf. Equitrans has converted this Mcf rate to a dekatherm (Dth) of $.0022 per Dth.

Pursuant to § 154.51 of the Commission's Regulation, Equitrans requests that the Commission grant any waivers necessary to permit the tariff sheets contained herein to become effective October 1, 1992.

Equitrans states that a copy of its filing has been served upon its purchasers and interested state commissions.

Any person desiring to be heard or to protest said filing should file a motion to intervene or protest with the Federal Energy Regulatory Commission, 825 North Capitol Street, NE., Washington, DC 20426, in accordance with Section 385.211 and 385.214 of the Commission's Rules of Practice and Procedures (18 CFR 385.211 and 385.214). All such motions or protests should be filed on or before September 9, 1992. Protests will be considered by the Commission in determining the appropriate action to be taken, but will not serve to make protestants parties to the proceeding. Any persons wishing to become a party must file a motion to intervene. Copies of this filing are on file with the Commission and are available for public inspection.

Lois D. Cashell,

Secretary.

[FR Doc. 92-21481 Filed 9-4-92; 8:45 am]

BILLING CODE 6717-01-M

[Docket No. TA92-1-15-001 & TQ92-5-15-001]

Mid Louisiana Gas Company; Notice of Revision to Annual Filing

September 1, 1992.

Take notice that Mid Louisiana Gas Company ("Mid Louisiana") on August 28, 1992, tendered for filing as part of First Revised Volume No. 1 of its FERC Gas Tariff the Tariff Sheet and proposed effective date as set forth below:

1st Rev. Superseding

Substitute Ninety-Second, Rev. Sheet No. 3a
1st Ninety-First, Revised Sheet No. 3a
September 1, 1992

Mid Louisiana states that the purpose of the filing of Substitute Ninety-Second Rev. Sheet No. 3a is to revise the current adjustment contained in Mid Louisiana's annual PGA filing in compliance with the Commission's Reglations issued in Order Nos. 483 and 483-A.

Mid Louisiana states that the tariff sheet was filed as a revision to its annual PGA filing to reflect the latest estimated gas cost to Mid Louisiana from its various suppliers. Mid Louisiana states that the majority of these suppliers have contracts with Mid Louisiana which contain pricing provisions which are tied to the spot market price of gas.

Mid Louisiana states that copies of this filing have been mailed to each of its jurisdictional customers and interested state commissions.

Any person desiring to protest said filing should file a protest with the Federal Energy Regulatory Commission, 825 North Capitol Street, NE., Washington, DC 20426, in accordance with Rule 211 of the Commission's Rules of Practice and Procedure 18 CFR 385.211. All such protests should be filed on or before September 9, 1992. Protests will be considered by the Commission in determining the appropriate action to be taken, but will not serve to make protestants parties to the proceeding. Copies of this filing are on file with the Commission and are available for public inspection.

Lois D. Cashell,

Secretary.

[FR Doc. 92–21482 Filed 9–4–92; 8:45 am]

BILLING CODE 6717–01–M

[Docket No. TQ92–15–25–000]

Mississippi River Transmission Corporation; Notice of Rate Change Filing

September 1, 1992

Take notice that on August 28, 1992 Mississippi River Transmission Corporation (MRT) tendered for filing Eighty-First Revised Sheet No. 4, and Fortieth Revised Sheet No. 4.1 to its FERC Gas Tariff, Second Revised Volume No. 1 to be effective September 1, 1992. MRT states that the purpose of the instant filing is to reflect an out-of-cycle purchase gas cost adjustment (PGA).

MRT states that Eighty-First Revised Sheet No. 4 and Fortieth Revised Sheet No. 4.1 reflect an increase of 5.31 cents per MMBtu in the commodity cost of purchased gas from PGA rates filed to be effective September 1, 1992, in Docket No. TQ92–14–25–000. MRT also states that since the July 31, 1992 filing date, MRT has experienced changes in purchase and transportation costs for its system supply that could not have been reflected in that filing under current Commission regulations.

MRT states that a copy of the filing has been mailed to each of MRT's jurisdictional sales customers and the State Commissions of Arkansas, Missouri, and Illinois.

Any person desiring to be heard or to protest said filing should file a motion to intervene or protest with the Federal Energy Regulatory Commission, 825 North Capitol Street, NE., Washington, DC 20426, in accordance with Sections 385.211 and 385.214 of the Commission's Rules of Practice and Procedure (18 CFR 385.211, 385.214). All such motions or protests should be filed on or before September 9, 1992. Protests will be considered by the Commission in determining the appropriate action to be taken, but will not serve to make protestants parties to the proceeding. Any person wishing to become a party must file a motion to intervene. Copies of this filing are on file with the Commission and are available for public inspection.

Lois D. Cashell,

Secretary.

[FR Doc. 92–21483 Filed 9–4–92; 8:45 am]

BILLING CODE 6717–01–M

[Docket No. RS92–81–000]

Stingray Pipeline Company; Notice of Conference

September 1, 1992.

Take notice that on September 17, 1992, a conference will be convened in the above-captioned docket to discuss Stingray Pipeline Company's summary of its proposed plan for implementation of Order No. 636 and 636–A.

The conference will be held at the offices of the Federal Energy Regulatory Commission, 810 First Street, NE., Washington, DC 20426. The conference will begin at 9 a.m. All interested persons are invited to attend. Attendance at the conference, however, will not confer party status. For additional information, interested persons can call Theresa Cooney at (202) 208–0418 or Jacquie McDuffy at (202) 208–0928.

Lois D. Cashell,

Secretary.

[FR Doc. 92–21484 Filed 9–4–92; 8:45 am]

BILLING CODE 6717–01–M

[Docket No. TM93–1–17–000]

Texas Eastern Transmission Corporation; Notice of Proposed Changes in FERC Gas Tariff

September 1, 1992.

Take notice that Texas Eastern Transmission Corporation (Texas Eastern) on August 28, 1992, tendered for filing as part of its FERC Gas Tariffs, Fifth Revised Volume No. 1 and Original Volume No. 2, six copies each of the following tariff sheets:

Fifth Revised Volume No. 1

Forty-fifth Revised Sheet No. 50.1
Fifty-second Revised Sheet No. 50.2
Twenty-sixth Revised Sheet No. 51
Seventh Revised Sheet No. 51.1
Tenth Revised Sheet No. 51.2
Tenth Revised Sheet No. 51.3

Original Volume No. 2

Ninth Revised Sheet No. 1J
Ninth Revised Sheet No. 1K
Fifth Revised Sheet No. 1L

Texas Eastern states that the purpose of this filing is to permit the tracking of the ACA unit surcharge authorized by the Commission for fiscal year 1993. The ACA Unit Surcharge authorized by the Commission for fiscal year 1993 is $0.0023 per Mcf, $0.0022 per dth converted to Texas Eastern's measurement basis.

Texas Eastern also proposes to track in its Rate Schedules SS–2 and SS–3 rates CNG Transmission Corporation's (CNG) revised ACA surcharge for rates applicable to its Rate Schedule GSS. Texas Eastern states that CNG is filing revised tariff sheets to be effective October 1, 1992 reflecting its revised ACA surcharge. Section 4.F of Texas Eastern's Rate Schedules SS–2 and SS–3 provide for an automatic rate adjustment to flow through any changes in CNG's GSS rates which underlie Texas Eastern's SS–2 and SS–3 rates.

The proposed effective date of the above listed tariff sheets is October 1, 1992.

Texas Eastern states that copies of the filing were served on Texas Eastern's jurisdictional customers, interested state commissions and all current Rate Schedule IT–1 Shippers.

Any person desiring to be heard or to protest said filing should file a motion to intervene or protest with the Federal Energy Regulatory Commission, 825 North Capitol Street, NE., Washington, DC 20426, in accordance with Rules 211 and 214 of the Commission's Rules of Practice and Procedure. All such motions or protests should be filed on or before September 9, 1992. Protests will be considered by the Commission in determining the appropriate action to be taken, but will not serve to make protestants parties to the proceeding. Any person wishing to become a party must file a motion to intervene. Copies of this filing are on file with the Commission and are available for public inspection.

Lois D. Cashell,

Secretary.

[FR Doc. 92–21485 Filed 9–4–92; 8:45 am]

BILLING CODE 6717–01–M

[Docket No. TM92-10-17-000]

Texas Eastern Transmission Corp.; Proposed Changes in FERC Gas Tariff

September 1, 1992.

Take notice that Texas Eastern Transmission Corporation (Texas Eastern) on August 28, 1992 tendered for filing as part of its FERC Gas Tariff, Fifth Revised Volume No. 1, six copies each of the following tariff sheets:

Proposed To Be Effective July 1, 1992

Revised 47th Revised Sheet No. 50.2
Revised Sub 47th Revised Sheet No. 50.2

Proposed To Be Effective August 1, 1992

Fiftieth Revised Sheet No. 50.2

Proposed To Be Effective September 1, 1992

Fifty-first Revised Sheet No. 50.2

Texas Eastern states that these sheets are being filed pursuant to section 4.F of Texas Eastern's Rate Schedules SS-2 and SS-3 to flow through a change in CNG Transmission Corporation's (CNG) Rate Schedule GSS rate which underlies the rates for Texas Eastern's Rate Schedules SS-2 and SS-3.

Texas Eastern states that CNG made tariff filings on July 1, 1992 and July 2, 1992 in Docket Nos. TM92-8-22-000 and TA92-1-22-000 which revise the Rate Schedule GSS rates effective July 1, 1992 and September 1, 1992, respectively.

Texas Eastern states that Revised 47th Revised Sheet No. 50.2 will be used for purposes of billing the revised Rate Schedule SS-2 and SS-3 rates effective July 1, 1992 while Revised Sub 47th Revised Sheet No. 50.2 will be used for purposes of determining the refund in accordance with the Stipulation and Agreement in Docket No. RP90-119-000 *et al.* Fiftieth Revised Sheet No. 50.2 is being filed to reflect CNG's July 1, 1992 GSS rate change in Texas Eastern's out-of-cycle PGA effective August 1, 1992.

The proposed effective dates of the above tariff sheets are as indicated above.

Texas Eastern states that copies of the filing were served on Texas Eastern's jurisdictional customers and interested state commissions.

Any person desiring to be heard or to protest said filing should file a motion to intervene or protest with the Federal Energy Regulatory Commission, 825 North Capitol Street, NE., Washington, DC 20426, in accordance with Rules 211 and 214 of the Commission's Rules of Practice and Procedure. All such motions or protests should be filed on or before September 9, 1992. Protests will be considered by the Commission in determining the appropriate action to be taken, but will not serve to make protestants parties to the proceeding. Any person wishing to become a party must file a motion to intervene. Copies of this filing are on file with the Commission and are available for public inspection.

Lois D. Cashell,

Secretary.

[FR Doc. 92-21486 Filed 9-4-92; 8:45 am]

BILLING CODE 6717-01-M

[Docket No. TM93-1-56-000]

Valero Interstate Transmission Co.; Proposed Changes in FERC Gas Tariff

September 1, 1992.

Take notice that Valero Interstate Transmission Company ("Vitco"), on August 28, 1992 tendered for filing the following tariff sheets containing changes to the ACA unit rate in each applicable rate schedule:

FERC Gas Tariff, First Revised Volume No. 1

1st Revised Sheet No. 7
1st Revised Sheet No. 8
1st Revised Sheet No. 70

FERC Gas Tariff, First Revised Volume No. 2

6th Revised Sheet No. 6
1st Revised Sheet No. 21

The proposed effective date of the above filing is October 1, 1992. Vitco requests a waiver of any Commission order or regulations which would prohibit implementation by October 1, 1992.

Any person desiring to be heard or protest said filing should file a motion to intervene or protest with the Federal Energy Regulatory Commission, 825 North Capital Street, NE., Washington, DC 20426, in accordance with §§ 385.214 and 385.211 of the Commission's Rules and Regulations. All such motions or protests should be filed on or before September 9, 1992. Protests will be considered by the Commission in determining the appropriate action to be taken, but will not serve to make protestants parties to the proceedings. Any person wishing to become a party must file a motion to intervene. Copies of this filing are on file with the Commission and are available for public inspection in the Public Reference Room.

Lois D. Cashell,

Secretary.

[FR Doc. 92-21487 Filed 9-4-92; 8:45 am]

BILLING CODE 6717-01-M

[Docket No. RS92-53-000]

Western Gas Interstate Co.; Conference

September 1, 1992.

Take notice that on September 22, 1992, a conference will be convened in the above-captioned docket to discuss Western Gas Interstate Company's summary of its proposed plan for implementation of Order Nos. 636 and 636-A.

The conference will be held in a room to be designated at the offices of the Federal Energy Regulatory Commission, 810 First Street, NE., Washington, DC 20426. The conference will begin at 10 a.m. All interested persons are invited to attend. Attendance at the conference, however, will not confer party status. For additional information, interested persons can contact David Faerberg at (202) 208-1275 or Marilyn Rand at (202) 208-0327.

Lois D. Cashell,

Secretary.

[FR Doc. 92-21488 Filed 9-4-92; 8:45 am]

BILLING CODE 6717-01-M

[Docket No. SA92-7-000]

Winnie Pipeline Co.; Petition for Adjustment

August 28, 1992.

On August 17, 1992, Winnie Pipeline Company (Winnie) filed with the Federal Energy Regulatory Commission (Commission) a petition for adjustment pursuant to section 502(c) of the Natural Gas Policy Act of 1978 (NGPA), from the regulations appearing at subpart C of part 284 of the Commission's regulations. Winnie, which does not render city-gate service, seeks an adjustment to permit it to base its rates for section 311(a) storage services on the Winnie storage rate on file with the Railroad Commission of Texas, in satisfaction of the comparable service standard set forth in § 284.123(b)(1)(ii) of the Commission's regulations.

The procedures applicable to the conduct of this adjustment proceeding are found in subpart K of the Commission's Rules of Practice and Procedure.

Any person desiring to participate in this adjustment proceeding must file a motion to intervene in accordance with the provisions of such subpart K. All motions to intervene must be filed

within 15 days after publication of this notice in the Federal Register.

Lois D. Cashell,

Secretary.

[FR Doc. 92–21489 Filed 9–4–92; 8:45 am]

BILLING CODE 6717–01–M

ENVIRONMENTAL PROTECTION AGENCY

[FRL–4201–5]

Agency Information Collection Activities Under OMB Review

AGENCY: Environmental Protection Agency (EPA).

ACTION: Notice.

SUMMARY: In compliance with the Paperwork Reduction Act (44 U.S.C. 3501 *et seq.*), this notice announces that the Information Collection Request (ICR) abstracted below has been forwarded to the Office of Management and Budget (OMB) for review and comment. The ICR describes the nature of the information collection and its expected cost and burden.

DATES: Comments must be submitted on or before October 8, 1992. For further information, or to obtain a copy of this ICR, contact Sandy Farmer at EPA (202) 260–2740.

SUPPLEMENTARY INFORMATION:

Office of Pesticides and Toxic Substances

Title: Data Acquisition for List 3 Inert Ingredients (EPA ICR No. 1620.01). This is a new collection.

Abstract: Under section 3(c)(2)(B) of the Federal Insecticide, Fungicide, and Rodenticide Act (FIFRA), pesticide registrants are required to report to EPA and keep records of data from studies of the pesticides which are currently registered under FIFRA. EPA collects data on List 1 pesticides which are known to contain toxic inert ingredients. EPA also collects information on List 2 pesticides which contain inert ingredients with suspected toxicity. Under this collection, registrants would submit to EPA, and keep records of, any information on List 3 pesticides which contain inert ingredients with unknown toxicity. The Agency uses the information to assess whether the inert ingredients contained in pesticides may cause an unreasonable adverse effect on human health and the environment, and to determine whether to maintain the registration of a pesticide.

Burden Statement: The burden for this collection of information is estimated to average 5,438 hours per response for reporting, and 24 hours per recordkeeper annually. This estimate includes the time needed to review instructions, gather the data needed, complete the form, and review the collection of information.

Respondents: Pesticide Registrants.

Estimated No. of Respondents: 400.

Estimated No. of Responses per Respondent: 50.

Estimated Total Annual Burden on Respondents: 273,100 hours.

Frequency of Collection: On occasion.

Send comments regarding the burden estimate, or any other aspect of the information collection, including suggestions for reducing the burden to:

Sandy Farmer, U.S. Environmental Protection Agency, Information Policy Branch (PM 223Y), 401 M Street, SW., Washington, DC 20460.

and

Matthew Mitchell, Office of Management and Budget, Office of Information and Regulatory Affairs, 725 17th Street, NW., Washington, DC 20503.

Dated: August 31, 1992.

Paul Lapsley,

Director, Regulatory Management Division.

[FR Doc. 92–21546 Filed 9–4–92; 8:45 am]

BILLING CODE 6560–50–M

FARM CREDIT SYSTEM INSURANCE CORPORATION

Statement of Policy on Assistance To Operating Insured System Banks

AGENCY: Farm Credit System Insurance Corporation.

ACTION: Statement of policy; request for comments.

SUMMARY: Section 5.61 of the Farm Credit Act of 1971 (the Act) provides the Farm Credit System Insurance Corporation (Corporation) with authority, in its sole discretion, to provide assistance to insured banks as that term is defined in section 5.61.

Given the importance of the provisions of section 5.61, the Board of Directors of the Corporation has concluded that it should adopt a policy statement setting forth the circumstances under which financial assistance to operating institutions will be considered, and the terms and conditions which would likely be imposed in conjunction with the granting of assistance. The Board of Directors is requesting comments on such terms and conditions.

DATES: Comments must be submitted on or before October 8, 1992.

ADDRESSES: Comments should be mailed or delivered (in triplicate) to G. Michael Dew, Director, Risk Management Division, Farm Credit System Insurance Corporation, McLean, Virginia 22102–0826. Copies of all comments received will be available for examination by interested parties in the offices of the Farm Credit System Insurance Corporation, 1501 Farm Credit Drive, McLean, Virginia.

FOR FURTHER INFORMATION CONTACT: G. Michael Dew, Director, Risk Management Division, Farm Credit System Insurance Corporation, P.O. Box 9826, McLean, VA 22102–0826, (703) 883–4385, TDD (703) 883–4455.

SUPPLEMENTARY INFORMATION: Under section 5.61 of the Act, the Corporation may provide financial assistance to operating insured System banks:[1] (1) To prevent the placing of the bank in receivership or to assist a bank in danger of being placed in receivership, or (2) when severe financial conditions exist that threaten the stability of a significant number of insured System banks or of insured System banks possessing significant financial resources, to lessen the risk to the Corporation posed by such insured System bank under such threat of instability.

In order for the Corporation to provide assistance to any operating insured bank, the Corporation Board of Directors must determine that either: (1) The amount of assistance is less than the cost of liquidating the bank (including paying the insured obligations issued on behalf of the bank) or (2) the continued operation of the bank is essential to provide adequate agricultural credit services in the area of operations of the bank.

Assistance to operating insured banks may be provided directly to the bank in danger of being placed in receivership, or to another insured bank qualified to merge with or acquire the failing bank.

The Corporation believes that proposals for assistance to operating insured banks under section 5.61 of the Act should be reviewed by the Corporation utilizing the following criteria:

1. The cost to the Corporation must be clearly less than other available alternatives.

[1] As used in section 5.61, the terms "Insured System Bank" and "Bank" include each Production Credit Association and other Associations making direct loans under the authority provided under section 7.6 of the Farm Credit Act of 1971, as amended.

2. All alternative sources of assistance must be exhausted prior to the Corporation's granting assistance.

3. The proposal must reasonably anticipate the viability of the recipient, including provisions for the attainment of an adequate level of capitalization within a reasonable period of time.

4. The proposal should provide for the eventual repayment of the assistance.

5. The proposal must provide for adequate managerial resources, and for the Corporation's approval of business plans. Continued service of any Director or Senior Officer serving the assisted institution in a policy-making role, as determined by the Corporation, will be subject to approval of the Corporation. In addition, compensation arrangements covering Directors and Senior Officers must be approved by the Corporation.

6. The Corporation will consider on a case-by-case basis the nature of the financial assistance requested. Generally, assistance proposals should not anticipate the acquisition and servicing of assets from the assisted institution by the Corporation.

7. Fee arrangements with attorneys, accountants, consultants, and other parties incident to requests for financial assistance must be disclosed to the Corporation. Excessive fees are unnecessary and must be avoided; fee arrangements will be considered in evaluating the cost of the assistance request. In no case should the payment of any fee be contingent upon approval or receipt of financial assistance.

8. The Corporation retains the option of evaluating the assistance proposal within the context of a competitive bidding process and will consider soliciting interest from qualified acquirors.

9. An institution seeking operating institution assistance must consent to unrestricted on-site due diligence review by any potential acquiror that is determined by the Corporation to be qualified after consultation with the Farm Credit Administration.

10. The proposal must contain quantifiable limits on all financial items in the request.

11. The Corporation will evaluate the potential financial effect of the proposal on shareholders, uninsured creditors and the financial markets.

The Corporation invites comments on these factors and recommendations for any others that may be appropriate for consideration and inclusion in the Board of Directors policy statement.

Dated: August 31, 1992.

Curtis M. Anderson,

Secretary, Board of Directors, Farm Credit System Insurance Corporation.

[FR Doc. 92–21492 Filed 9–4–92; 8:45 am]

BILLING CODE 6710–01–M

FEDERAL COMMUNICATIONS COMMISSION

Public Information Collection Requirement Submitted to Office of Management and Budget for Review

August 26, 1992.

The Federal Communications Commission has submitted the following information collection requirement to OMB for review and clearance under the Paperwork Reduction Act of 1980 (44 U.S.C. 3507).

Copies of this submission may be purchased from the Commission's copy contractor, Downtown Copy Center, 1990 M Street, NW., suite 640, Washington, DC 20036, (202) 452–1422. For further information on this submission contact Judy Boley, Federal Communications Commission, (202) 632–7513. Persons wishing to comment on this information collection should contact Jonas Neihardt, Office of Management and Budget, Room 3235 NEOB, Washington, DC 20503, (202) 395–4814.

OMB Number: 3060–0022.

Title: Application for Permit of an Alien Amateur Radio Licensee to Operate in the United States.

Form Number: FCC Form 610–A.

Action: Extension of a currently approved collection.

Respondents: Individuals or households.

Frequency of Response: On occasion reporting.

Estimated Annual Burden: 4,000 responses; .084 hours average burden per response; 336 hours total annual burden.

Needs and Uses: FCC Form 610–A is used when aliens, who hold an amateur operator and station license issued by his/her government, wish to apply for a permit to operate an amateur radio station in the United States. Licensing Division personnel will use the data to determine eligibility for radio station authorization and to issue a radio station/operator permit. Data is also used by Compliance personnel in conjunction with Field Engineers for enforcement and interference resolution purposes.

Federal Communications Commission.

Donna R. Searcy,

Secretary.

[FR Doc. 92–21471 Filed 9–4–92; 8:45 am]

BILLING CODE 6712–01–M

Public Information Collection Requirements Submitted to Office of Management and Budget for Review

August 27, 1992.

The Federal Communications Commission has submitted the following information collection requirements to OMB for review and clearance under the Paperwork Reduction Act of 1980 (44 U.S.C. 3507).

Copies of these submissions may be purchased from the Commission's copy contractor, Downtown Copy Center, 1990 M Street, NW, suite 640, Washington, DC 20036, (202) 452–1422. For further information on these submissions contact Judy Boley, Federal Communications Commission, (202) 632–7513. Persons wishing to comment on these information collections should contact Jonas Neihardt, Office of Management and Budget, Room 3235 NEOB, Washington, DC 20503, (202) 395–4814.

OMB Number: None.

Title: ARMIS Joint Cost Report.

Report Number: FCC Report 43–03.

Action: New collection.

Respondents: Businesses or other for profit.

Frequency of Response: Annually.

Estimated Annual Burden: 150 responses, 115 hours average burden per response; 17,250 hours total annual burden.

Needs and Uses: This submission is made to request extension of the expiration date of FCC Report 43–03, the Joint Cost Report, without any change in its substance or method of collection. The Joint Cost Report contains financial and operating data and is used to monitor the local exchange carrier industry and to perform routine analyses of costs and revenues on behalf of the Commission. It is one of ten reports comprising the Automated Reporting Management Information System (ARMIS). ARMIS was implemented to facilitate the timely and efficient analyses of revenue requirements and rate of return, to provide an improved basis for audits and other oversight functions, and to enhance the Commission's ability to quantify the effects of alternative policy. Currently, OMB control number 3060–0395 is assigned to ARMIS reports, including this one. However, the Commission is

requesting that a new OMB control number be assigned exclusively for the Joint Cost Repair to facilitate recordkeeping.

OMB Number: None.
Title: ARMIS Quarterly Report.
Report Number: FCC Report 43–01.
Action: New collection.
Respondents: Businesses or other for-profit.
Frequency of Response: Quarterly.
Estimated Annual Burden: 600 responses; 220 hours average burden per response, 132,000 hours total annual burden.
Needs and Uses: This submission is made to request extension of the expiration date of FCC Report 43–01, the Quarterly Report, without any change in its substance or method of collection. The Quarterly Report contains financial and operating data and is used to monitor the local exchange carrier industry and to perform routine of costs and revenues on behalf of the Commission. It is one of ten reports comprising the Automated Reporting Management Information System (ARMIS). ARMIS was implemented to facilitate the timely and efficient analyses of revenue requirements and rate of return, to provide an improved basis for audits and other oversight functions, and to enhance the Commission's ability to quantify the effects of alternative policy. Currently, OMB control number 3060–0395 is assigned to ARMIS reports, including this one. However, the Commission is requesting that a new OMB control number be assigned exclusively for the Quarterly Report to facilitate recordkeeping.

OMB Number: None.
Title: ARMIS Access Report.
Report Number: FCC Report 43–04.
Action: New collection.
Respondents: Businesses or other for-profit.
Frequency of Response: Annually.
Estimated Annual Burden: 150 responses; 1,150 hours average burden per response, 172,500 hours total annual burden.
Needs and Uses: This submission is made to request extension of the expiration date of FCC Report 43–04, the Access Report, without any change in the substance or method of collection. The Access Report contains financial and operating data and is used to monitor the local exchange carrier industry and to perform routine of costs and revenues on behalf of the Commission. It is one of ten reports comprising the Automated Reporting Management Information System (ARMIS). ARMIS was implemented to facilitate the timely and efficient analyses of revenue requirements and rate of return, to provide an improved basis for audits and other oversight functions, and to enhance the Commission's ability to quantify the effects of alternative policy. Currently, OMB control number 3060–0395 is assigned to ARMIS reports, including this one. However, the Commission is requesting that a new OMB control number be assigned exclusively for the Access Report to facilitate recordkeeping.

Federal Communications Commission.
Donna R. Searcy,
Secretary.
[FR Doc. 92–21470 Filed 9–4–92; 8:45 am]
BILLING CODE 6712–01–M#

FEDERAL EMERGENCY MANAGEMENT AGENCY

[FEMA–957–DR]

Guam; Notice of Major Disaster and Related Determinations

AGENCY: Federal Emergency Management Agency (FEMA).
ACTION: Notice.

EFFECTIVE DATE: August 28, 1992.
SUMMARY: This is a notice of the Presidential declaration of a major disaster for the Territory of Guam (FEMA–957–DR), dated August 28, 1992, and related determinations.
FOR FURTHER INFORMATION CONTACT: Pauline C. Campbell, Disaster Assistance Programs, Federal Emergency Management Agency, Washington, DC 20472, (202) 646–3606.
SUPPLEMENTARY INFORMATION: Notice is hereby given that, in a letter dated August 28, 1992, the President declared a major disaster under the authority of the Robert T. Stafford Disaster Relief and Emergency Assistance Act (42 U.S.C. 5121 *et seq.*), as follows:

I have determined that the damage in certain areas of the State of Territory of Guam, resulting from Typhoon Omar on August 28, 1992, and continuing is of sufficient severity and magnitude to warrant a major disaster declaration under the Robert T. Stafford Disaster Relief and Emergency Assistance Act ("the Stafford Act"). I, therefore, declare that such a major disaster exists in the Territory of Guam.

In order to provide Federal assistance, you are hereby authorized to allocate from funds available for these purposes, such amounts as you find necessary for Federal disaster assistance and administrative expenses.

You are authorized to provide Individual Assistance and Public Assistance in the designated areas. Consistent with the requirement that Federal assistance be supplemental, any Federal funds provided under the Stafford Act for Public Assistance will be limited to 75 percent of the total eligible costs.

The time period prescribed for the implementation of section 310(a), Priority to Certain Applications for Public Facility and Public Housing Assistance, 42 U.S.C. 5153, shall be for a period not to exceed six months after the date of this declaration.

Notice is hereby given that pursuant to the authority vested in the Director of the Federal Emergency Management Agency under Executive Order 12148, I hereby appoint Mr. Richard Buck of the Federal Emergency Management Agency to act as the Federal Coordinating Officer for this declared disaster.

I do hereby determine the following areas of the Territory of Guam to have been affected adversely by this declared major disaster:

The Territory of Guam for Individual Assistance and Public Assistance.

(Catalog of Federal Domestic Assistance No. 83.516, Disaster Assistance)

Wallace E. Stickney,
Director.
[FR Doc. 92–21521 Filed 9–4–92; 8:45 am]
BILLING CODE 6718–02–M

FEDERAL MARITIME COMMISSION

Agreement(s) Filed; Oakland, et al.

The Federal Maritime Commission hereby gives notice of the filing of the following agreement(s) pursuant to section 5 of the Shipping Act of 1984.

Interested parties may inspect and obtain a copy of each agreement at the Washington, DC Office of the Federal Maritime Commission, 800 North Capitol Street NW., 9th Floor. Interested parties may submit comments on each agreement to the Secretary, Federal Maritime Commission, Washington, DC 20573, within 10 days after the date of the **Federal Register** in which this notice appears. The requirements for comments are found in § 572.603 of title 46 of the Code of Federal Regulations. Interested persons should consult this section before communicating with the Commission regarding a pending agreement.

Agreement No.: 224–010974–011.
Title: Oakland/International Transportation Service Terminal Agreement.
Parties:
City of Oakland ("Port")

International Transportation Service, Inc. ("ITS").

Synopsis: The amendment extends the term of the Agreement until October 8, 1992 or until the effectiveness of a pending supplemental agreement between the Port and ITS.

Agreement No.: 224–200087–004.

Title: Oakland/Maersk Pacific Terminal Agreement.

Parties:

City of Oakland ("Port")
Maersk Pacific Ltd. ("Maersk")

Synopsis: The amendment adjusts the rental Maersk will pay to the port for the premises Maersk leases under the Agreement.

Dated: September 1, 1992.

Joseph C. Polking,

Secretary.

By Order of the Federal Maritime Commission.

[FR Doc. 92–21491 Filed 9–4–92; 8:45 am]

BILLING CODE 6730–01–M

FEDERAL RESERVE SYSTEM

Fourth Financial Corp., et al.; Formations of; Acquisitions by; and Mergers of Bank Holding Companies

The companies listed in this notice have applied for the Board's approval under section 3 of the Bank Holding Company Act (12 U.S.C. 1842) and § 225.14 of the Board's Regulation Y (12 CFR 225.14) to become a bank holding company or to acquire a bank or bank holding company. The factors that are considered in acting on the applications are set forth in section 3(c) of the Act (12 U.S.C. 1842(c)).

Each application is available for immediate inspection at the Federal Reserve Bank indicated. Once the application has been accepted for processing, it will also be available for inspection at the offices of the Board of Governors. Interested persons may express their views in writing to the Reserve Bank or to the offices of the Board of Governors. Any comment on an application that requests a hearing must include a statement of why a written presentation would not suffice in lieu of a hearing, identifying specifically any questions of fact that are in dispute and summarizing the evidence that would be presented at a hearing.

Unless otherwise noted, comments regarding each of these applications must be received not later than October 2, 1992.

A. Federal Reserve Bank of Kansas City (John E. Yorke, Senior Vice President) 925 Grand Avenue, Kansas City, Missouri 64198:

1. Fourth Financial Corp., Wichita, Kansas; to acquire 100 percent of the voting shares of Southern Bancorp, Inc., Tulsa, Oklahoma, and thereby indirectly acquire Southern National Bank, Tulsa, Oklahoma.

2. United Nebraska Financial Co., Grand Island, Nebraska; to acquire 100 percent of the voting shares of First Security Bank of Holdrege, Holdrege, Nebraska.

Board of Governors of the Federal Reserve System, September 1, 1992.

William W. Wiles,

Secretary of the Board.

[FR Doc. 92–21497 Filed 9–4–92; 8:45 am]

BILLING CODE 6210–01–F

NBD Bancorp, Inc.; Acquisition of Company Engaged in Permissible Nonbanking Activities

The organization listed in this notice has applied under § 225.23(a)(2) or (f) of the Board's Regulation Y (12 CFR 225.23(a)(2) or (f)) for the Board's approval under section 4(c)(8) of the Bank Holding Company Act (12 U.S.C. 1843(c)(8)) and § 225.21(a) of Regulation Y (12 CFR 225.21(a)) to acquire or control voting securities or assets of a company engaged in a nonbanking activity that is listed in § 225.25 of Regulation Y as closely related to banking and permissible for bank holding companies. Unless otherwise noted, such activities will be conducted throughout the United States.

The application is available for immediate inspection at the Federal Reserve Bank indicated. Once the application has been accepted for processing, it will also be available for inspection at the offices of the Board of Governors. Interested persons may express their views in writing on the question whether consummation of the proposal can "reasonably be expected to produce benefits to the public, such as greater convenience, increased competition, or gains in efficiency, that outweigh possible adverse effects, such as undue concentration of resources, decreased or unfair competition, conflicts of interests, or unsound banking practices." Any request for a hearing on this question must be accompanied by a statement of the reasons a written presentation would not suffice in lieu of a hearing, identifying specifically any questions of fact that are in dispute, summarizing the evidence that would be presented at a hearing, and indicating how the party commenting would be aggrieved by approval of the proposal.

Comments regarding the application must be received at the Reserve Bank indicated or the offices of the Board of Governors not later than October 2, 1992.

A. Federal Reserve Bank of Chicago (David S. Epstein, Vice President) 230 South LaSalle Street, Chicago, Illinois 60690:

1. NBD Bancorp, Inc., and NBD Indiana, Inc., both located in Detroit, Michigan; as part of their application to acquire INB Financial Corporation, Indianapolis, Indiana, to acquire INB's 4.65 percent interest in BHC Financial, Inc., Philadelphia, Pennsylvania, for a total of 8.34 percent, and thereby indirectly acquire:

(1) BHC Securities, Inc., Philadelphia, Pennsylvania, and thereby engage in securities brokerage services; underwriting and dealing in government obligations and money market instruments; and the purchase and sale of gold and silver bullion and coins for the account of customers; and

(2) Texas First Securities Corporation, Houston, Texas, and thereby engage in providing investment advisory and brokerage services separately and on a combined basis for institutional and retail customers.

These activities have been authorized by §§ 225.25(b)(15) and (16) of the Board's Regulation Y and by Board Order (*See, e.g., United Virginia Bankshares, Inc.*, 73 Federal Reserve Bulletin 309 (1987); and *PNC Financial Corporation*, 75 Federal Reserve Bulletin 396 (1989)). These activities will be conducted subject to all of the commitments and limitations in the Board's Orders.

Board of Governors of the Federal Reserve System, September 1, 1992.

William W. Wiles,

Secretary of the Board.

[FR Doc. 92–21498 Filed 9–4–92; 8:45 am]

BILLING CODE 6210–01–F

Susquehanna Bancshares, Inc., et al.; Applications to Engage de novo in Permissible Nonbanking Activities

The companies listed in this notice have filed an application under § 225.23(a)(1) of the Board's Regulation Y (12 CFR 225.23(a)(1)) for the Board's approval under section 4(c)(8) of the Bank Holding Company Act (12 U.S.C. 1843(c)(8)) and § 225.21(a) of Regulation Y (12 CFR 225.21(a)) to commence or to engage *de novo*, either directly or through a subsidiary, in a nonbanking activity that is listed in § 225.25 of Regulation Y as closely related to banking and permissible for bank holding companies. Unless otherwise

noted, such activities will be conducted throughout the United States.

Each application is available for immediate inspection at the Federal Reserve Bank indicated. Once the application has been accepted for processing, it will also be available for inspection at the offices of the Board of Governors. Interested persons may express their views in writing on the question whether consummation of the proposal can "reasonably be expected to produce benefits to the public, such as greater convenience, increased competition, or gains in efficiency, that outweigh possible adverse effects, such as undue concentration of resources, decreased or unfair competition, conflicts of interests, or unsound banking practices." Any request for a hearing on this question must be accompanied by a statement of the reasons a written presentation would not suffice in lieu of a hearing, identifying specifically any questions of fact that are in dispute, summarizing the evidence that would be presented at a hearing, and indicating how the party commenting would be aggrieved by approval of the proposal.

Unless otherwise noted, comments regarding the applications must be received at the Reserve Bank indicated or the offices of the Board of Governors not later than October 2, 1992.

A. Federal Reserve Bank of Philadelphia (Thomas K. Desch, Vice President) 100 North 6th Street, Philadelphia, Pennsylvania 19105:

1. Susquehanna Bancshares, Inc., Lititz, Pennsylvania; to engage *de novo* through its subsidiary, Susquebanc Lease Co., Manheim, Pennsylvania, in making, acquiring or servicing loans or other extensions of credit, for the Company's account, or for the account of others, such as would be made by a commercial finance company pursuant to § 225.25(b)(1)(iv) of the Board's Regulation Y.

B. Federal Reserve Bank of Chicago (David S. Epstein, Vice President) 230 South LaSalle Street, Chicago, Illinois 60690:

1. First Midwest Bancorp, Inc., Naperville, Illinois; to engage *de novo* in acquiring and servicing nonperforming loans from its subsidiary banks pursuant to § 225.25(b)(1) of the Board's Regulation Y.

Board of Governors of the Federal Reserve System, September 1, 1992.

William W. Wiles,

Secretary of the Board.

[FR Doc. 92–21499 Filed 9–4–92; 8:45 am]

BILLING CODE 6210–01–F

DEPARTMENT OF HEALTH AND HUMAN SERVICES

Alcohol, Drug Abuse, and Mental Health Administration

Los Angeles Target City Cooperative Agreement; Grant Availability

AGENCY: Office for Treatment Improvement, ADAMHA, DHHS.

ACTION: Supplemental award to the Los Angeles (LA) Target City Cooperative Agreement—LA Drug Program Enhancement Project.

SUMMARY: This notice is to provide information to the public that the Office for Treatment Improvement (OTI), in concert with the President's Weed and Seed strategy, is making available special funds to assist LA neighborhoods affected by recent civil disturbances. Specifically, up to $1 million has been set aside from the Office of National Drug Control Policy's special forfeiture funds, which were transferred to OTI for treatment expansion programs. These funds will be awarded in fiscal year 1992 as a supplement to the ongoing LA Target City cooperative agreement.

The supplemental award will focus on providing expanded and improved treatment services for adolescents involved with the juvenile justice system who are living in the two designated LA weed and seed service areas. This target population has been identified as one of the highest risk population groups. Therefore, the project will seek to build on expanding the capacity of treatment services available through the current cooperative efforts between the LA County Alcohol and Drug Abuse Program and the LA County Probation Department in implementing the Juvenile Offender Substance Abuse Treatment program (JOSAT), as well as the ongoing cooperative efforts between the city, county, and State agencies involved in the Target City project.

The receipt, review, and award of the supplemental application from the California Department of Alcohol and Drug Programs will be handled in an expedited manner, and it is anticipated that the supplemental award will be made by mid-September 1992. The amount of funds awarded, as well as the specific purposes and activities for which funds will be used, will be based on the quality of the application as determined by an objective review and the negotiated terms and conditions of award.

Authority: The award will be made under the authority section 509G(b) of the Public Health Service Act and Public Law 102–141. The Catalog of Federal Domestic Assistance number for this program is 93.950.

Joseph R. Leone,

Associate Administrator for Management, Alcohol, Drug Abuse, and Mental Health Administration.

[FR Doc. 92–21460 Filed 9–4–92; 8:45 am]

BILLING CODE 4160–20–M

Office for Substance Abuse Prevention; Meeting

Pursuant to Public Law 92–463, notice is hereby given of the meetings of the advisory committees of the Office for Substance Abuse Prevention for September 1992.

The initial review groups will be performing review of applications for Federal assistance; therefore, portions of these meetings will be closed to the public as determined by the Acting Administrator, ADAMHA, in accordance with 5 U.S.C. 552b(c)(6) and 5 U.S.C. app. 2 10(d).

A summary of the meetings and rosters of committee members may be obtained from: Ms. D. Herman, OSAP Committee Management Officer, Alcohol, Drug Abuse, and Mental Health Administration, Rockwall II Building, Suite 630, 5600 Fishers Lane, Rockville, MD 20857 (Telephone: 301–443–4783).

Substantive program information may be obtained from the contact whose name, room number, and telephone number is listed below.

Committee Names: High Risk Youth Review Committee, Subcommittees 1 and 3.
Meeting Date(s): September 21–25, 1992.
Place: Courtyard Marriott, 805 Russell Avenue, Gaithersburg, MD 20879.
Open: September 21, 8:30 a.m.–10 a.m.
Closed: Otherwise.
Contact: High Risk Youth Review Committee, Subcommittee 1, Mrs. Dorothy West, Telephone: (301) 443–5062.
High Risk Youth Review Committee, Subcommittee 3, Frederick C. Depp, Ph.D., Telephone: (301) 443–9540.

Committee Names: High Risk Youth Review Committee, Subcommittees 2 and 4.
Meeting Date(s): September 21–25, 1992.
Place: Marriott Residence Inn, 7335 Wisconsin Avenue, Bethesda, MD 20814.
Open: September 21, 8:30 a.m.–10 a.m.
Closed: Otherwise.
Contact: High Risk Youth Review Committee, Subcommittee 2, Beverlie Fallik, Ph.D., Telephone: (301) 443–9136.
High Risk Youth Review Committee, Subcommittee 4, Thomas Granzow, Ph.D., Telephone: (301) 443–5062.

Committee Name: Substance Abuse Prevention Conference Review Committee.
Meeting Date(s): September 30, 1992, October 1–2, 1992.
Place: J.W. Marriott Hotel, 1331 Pennsylvania Avenue, Washington, DC.
Open: September 30, 8:30 a.m.–10 a.m.

Closed: Otherwise.

Contact: Substance Abuse Prevention Conference, Review Committee, Ferdinand W. Hui, Ph.D., Telephone: (301) 443–9136.

Dated: September 1, 1992.

Peggy W. Cockrill,

Committee Management Officer, Alcohol, Drug Abuse, and Mental Health Administration.

[FR Doc. 92–2146; Filed 9–4–92; 8:45 am]

BILLING CODE 4160–20–M

Centers for Disease Control

Diseases Transmitted Through the Food Supply

AGENCY: Centers for Disease Control, Public Health Service, Department of Health and Human Services.

ACTION: Notice of annual update of list of infectious and communicable diseases that are transmitted through handling the food supply and the methods by which such diseases are transmitted.

SUMMARY: Section 103(d) of the Americans with Disabilities Act of 1990 requires the Secretary to publish a list of infectious and communicable diseases that are transmitted through handling the food supply. The Centers for Disease Control (CDC) published a final list on August 16, 1991, (56 FR 40897). The final list was reviewed in light of newly received information and has been revised as set forth below.

EFFECTIVE DATE: September 8, 1992.

FOR FURTHER INFORMATION CONTACT: Dr. Morris E. Potter, National Center for Infectious Diseases, Centers for Disease Control, 1600 Clifton Road, NE, Mailstop C–09, Atlanta, Georgia 30333, telephone (404) 639–2237.

SUPPLEMENTARY INFORMATION: Section 103(d) of the Americans with Disabilities Act of 1990, 42 U.S.C. 12113(d), requires the Secretary of Health and Human Services to:

1. Review all infectious and communicable diseases which may be transmitted through handling the food supply;
2. Publish a list of infectious and communicable diseases which are transmitted through handling the food supply;
3. Publish the methods by which such diseases are transmitted; and
4. Widely disseminate such information regarding the list of diseases and their modes of transmissibility to the general public.

Additionally, the list is to be updated annually.

After consultation with the Food and Drug Administration, the National Institutes of Health, state and local health officers, and national public health organizations, and after reviewing comments received after publication of an interim list, CDC published a final list in the **Federal Register** on August 16, 1991, (56 FR 40897).

Since the publication of the list on August 16, 1991, new information has been reviewed. A report on neurocysticercosis forms the basis for adding *Taenia solium"* infections to the list of infectious and communicable diseases in Part II.

Therefore, this revision of the list of infectious and communicable diseases that are transmitted through handling the food supply and the methods by which such diseases are transmitted is set forth below:

I. Pathogens Often Transmitted by Food Contaminated by Infected Persons Who Handle Food, and the Modes of Transmission of Such Pathogens

The contamination of raw ingredients from infected food-producing animals and contamination during processing are more important causes of foodborne disease than is contamination of foods by persons with infectious or contagious diseases. However, some pathogens are frequently transmitted by food contaminated by infected persons. The presence of any one of the following signs or symptoms in persons who handle food may indicate infection by one of these pathogens: diarrhea, vomiting, open skin sores, boils, fever, dark urine, or jaundice. The failure of food employees to wash hands (in situations such as after using the toilet, handling raw meat, cleaning spills, or carrying garbage, for example), wear clean gloves, or use clean utensils is responsible for the foodborne transmission of these pathogens. Non-foodborne routes of transmission, such as from one person to another, are also important in the spread of these pathogens. Pathogens that can cause diseases after an infected person handles food are the following:

Hepatitis A virus
Norwalk and Norwalk-like viruses
Salmonella typhi
Shigella species
Staphylococcus aureus
Streptococcus pyogenes

II. Pathogens Occasionally Transmitted by Food Contaminated by Infected Persons Who Handle Food, But Usually Transmitted by Contamination at the Source or in Food Processing or by Non-foodborne Routes

Other pathogens are occasionally transmitted by infected persons who handle food, but usually cause disease when food is intrinsically contaminated or cross-contaminated during processing or preparation. Bacterial pathogens in this category often require a period of temperature abuse to permit their multiplication to an infectious dose before they will cause disease in consumers. Preventing food contact by persons who have an acute diarrheal illness will decrease the risk of transmitting the following pathogens:

Campylobacter jejuni
Entamoeba histolytica
Enterohemorrhagic *Escherichia coli*
Enterotoxigenic *Escherichia coli*
Giardia lamblia
Nontyphoidal *Salmonella*
Rotavirus
Taenia solium
Vibrio cholerae 01
Yersinia enterocolitica

References

1. World Health Organization. Health surveillance and management procedures for food-handling personnel: report of a WHO consultation. World Health Organization technical report series; 785. Geneva: World Health Organization, 1989.

2. Frank JF, Barnhart HM. Food and dairy sanitation. In: Last JM, ed. Maxcy-Rosenau public health and preventive medicine, 12th edition. New York: Appleton-Century-Crofts, 1986:765–806.

3. Bennett JV, Holmberg SD, Rogers MF, Solomon SL. Infectious and parasitic diseases. In: Amler RW, Dull HB, eds. Closing the gap: the burden of unnecessary illness. New York: Oxford University Press, 1987:102–114.

4. Centers for Disease Control. Locally acquired neurocysticercosis—North Carolina, Massachusetts, and South Carolina, 1989–1991. MMWR 1992;41:1–4.

Dated: August 31, 1992.

William L. Roper,

Director, Centers for Disease Control.

[FR Doc. 92–21501 Filed 9–4–92; 8:45 am]

BILLING CODE 4160–18–M

Public Health Service

Subcommittee of the National Vaccine Advisory Committee (NVAC), Public Meeting

AGENCY: Office of the Assistant Secretary for Health, PHS, HHS.

SUMMARY: The Department of Health and Human Services (DHHS) and the Office of the Assistant Secretary for Health (OASH) are announcing the forthcoming meeting of a newly-formed NVAC Subcommittee on State and Local Level Impediments to Immunization Services.

DATE: Date, Time and Place: September 30, 1992, at 9 a.m. to 5 p.m., Parklawn

Building, Maryland Conference Room, Third Floor, 5600 Fishers Lane, Rockville, Maryland. The entire meeting is open to the public.

FOR FURTHER INFORMATION CONTACT: Written requests to participate should be sent to Kenneth J. Bart, M.D., Executive Secretary, National Vaccine Advisory Committee, National Vaccine Program Office, 5600 Fishers Lane, Parklawn Building, room 13A–53, Rockville, Maryland 20857, (301) 443–0715.

Agenda: Open Public Hearing: Interested persons may formally present data, information, or views orally or in writing on issues to be discussed by the Subcommittee or on any of the duties and responsibilities of the Subcommittee as described below. Because of limited seating, those desiring to make such presentations should make a request to the contact person before September 23, and submit a brief description of the information they wish to present to the Subcommittee. Those requests should include the names and addresses of proposed participants and an indication of the approximate time required to make their comments. A maximum of 10 minutes will be allowed for a given presentation. Any person attending the meeting who does not request an opportunity to speak in advance of the meeting will be allowed to make an oral presentation at the conclusion of the meeting, if time permits, at the chairperson's discretion.

Open Subcommittee Discussion: The Subcommittee shall act as an advisory capacity to the NVAC to identify state and local impediments to the delivery of effective immunization services and recommend ways to remove the policy and management barriers to immunization services. The agenda will be announced at the beginning of the meeting.

A list of Subcommittee members and the charter of the Advisory Committee will be available at the meeting. Those unable to attend the meeting may request this information from the contact person.

Dated: August 20, 1992.

Kenneth J. Bart,

Executive Secretary, NVAC.

[FR Doc. 92–21504 Filed 9–4–92; 8:45 am]

BILLING CODE 4160–17–M

Secretary's Council on Health Promotion and Disease Prevention; Meeting

In accordance with section 10(a)(2) of the Federal Advisory Committee Act (Pub. L. 92–463), announcement is made of the following meeting of the Secretary's Council on Health Promotion and Disease Prevention, scheduled to meet Friday, September 25, 1992.

Name: Secretary's Council on Health Promotion and Disease Prevention.

Date and Time: September 25, 1992, 9 a.m. to 5 p.m., Stonehenge, Hubert H. Humphrey Building, 200 Independence Avenue, SW., Washington, DC 20201.

Open, except for working breakfast and lunch.

Purpose: The Secretary's Council on Health Promotion and Disease Prevention is charged to provide advice to the Secretary and to the Assistant Secretary for Health on national goals and strategies to achieve those goals for improving the health of the Nation through disease prevention and health promotion and to provide a link to the private sector regarding health promotion activities.

Agenda: This will be the eleventh meeting of the Secretary's Council. The topic of this meeting is School Health: Ready to Learn.

Anyone wishing to obtain a roster of members, minutes of meetings, or other relevant information should contact Deborah R. Maiese, Senior Prevention Policy Advisor, Office of Disease Prevention and Health Promotion, Public Health Service, U.S. Department of Health and Human Services, Washington, DC 20201, Telephone (202) 905–8583.

Agenda items are subject to change as priorities dictate.

Dated: August 31, 1992.

James A. Harrell,

Deputy Director, Director, Office of Disease Prevention and Health Promotion.

[FR Doc. 92–21505 Filed 9–4–92; 8:45 am]

BILLING CODE 4160–17–M

Social Security Administration

Rescission of Social Security Acquiescence Ruling

AGENCY: Social Security Administration, HHS.

ACTION: Notice of Rescission of Social Security Acquiescence Ruling 88–7(5)—*Hickman* v. *Bowen*, 803 F. 2d 1377 (5th Cir. 1986).

SUMMARY: In accordance with 20 CFR 416.1485(e) and 422.406(b)(2) published January 11, 1990 (55 FR 1012), the Commissioner of Social Security gives notice of the rescission of Social Security Acquiescence Ruling 88–7(5).

EFFECTIVE DATE: September 8, 1992.

FOR FURTHER INFORMATION CONTACT: Darlynda Bogle, Litigation Staff, Social Security Administration, 6401 Security Blvd., Baltimore, MD 21235, (410) 965–4237.

SUPPLEMENTARY INFORMATION: A Social Security Acquiescence Ruling explains how we will apply a holding in a decision of a United States Court of Appeals that we determine conflicts with our interpretation of a provision of the Social Security Act or regulations when the Government has decided not to seek further of the case or is unsuccessful on further review.

As provided by 20 CFR 416.1485(e)(4), a Social Security Acquiescence Ruling may be rescinded as obsolete if we subsequently clarify, modify or revoke the regulation or ruling that was the subject of the circuit court holding for which the Acquiescence Ruling was issued.

On November 14, 1988, we issued Acquiescence Ruling (AR) 88–7(5) to reflect the holding in *Hickman* v. *Bowen*, 803 F. 2d 1377 (5th Cir. 1986), that advances of in-kind support and maintenance could be considered as loans to applicants for or recipients of supplemental security income (SSI) benefits and thus excluded from income as are loans of money. Under this AR, the governing factor was not the nature of the advance, but whether it created a debt. Therefore, under AR 88–7(5), a householder's advance of food or shelter to a household member could be treated as a loan, and thus excluded from income for SSI purposes, if the loan was made in realistic anticipation of repayment, if the borrower intended to repay the debt and if, under the terms of Social Security Ruling (SSR) 78–26, a bona fide loan agreement had been made. The AR applied to SSI claims filed by residents of states comprising the Fifth Circuit (Louisiana, Mississippi and Texas).

We are rescinding this AR because, concurrently with such rescission, we are issuing a Social Security Ruling (SSR) 92–88 which, among other things, reinterprets SSI policy to permit a householder's advance of food or shelter provided to a household member with the expectation of future repayment to be treated as the basis of a loan. Because this SSR provides a uniform national policy interpretation on the treatment of advances of in-kind support and maintenance, and it offers the same program results as AR 88–7(5), it is appropriate to rescind AR 88–7(5) as obsolete. Adjudicators of claims arising in the Fifth Circuit (Louisiana, Mississippi and Texas) will decide cases in accordance with SSR 92–8p. If we made a determination or a decision between November 10, 1986, the date of the Court of Appeals decision in *Hickman*, and the effective date of the SSR, a person residing in one of those

States may request application of the SSR to his or her claim by first demonstrating that application of the SSR could change our prior determination or decision.

(Catalog of Federal Domestic Assistance Programs Nos. 93.802 Social Security—Disability Insurance; 93.803 Social Security—Retirement Insurance; 93.805 Social Security Survivor's Insurance; 93.806—Special Benefits for Disabled Coal Miners; 93.807—Supplemental Security Income.)

Dated: August 26, 1992.

Gwendolyn S. King,

Commissioner of Social Security.

[FR Doc. 92–21518 Filed 9–4–92; 8:45 am]

BILLING CODE 4190–29–M

[Social Security Ruling SSR 92–8p.]

Title XVI: SSI Loan Policy, Including Its Applicability to Advances of Food and/or Shelter

AGENCY: Social Security Administration, HHS.

ACTION: Notice of Social Security Ruling.

SUMMARY: In accordance with 20 CFR 422.406(b)(1), the Commissioner of Social Security gives notice of Social Security Ruling 92–8p. This Ruling explains when the proceeds of a loan are not income for Supplemental Security Income (SSI) purposes, when they are a resource under the SSI program, and how a loan agreement is treated when the lender is an SSI applicant or recipient. This Ruling also reinterprets SSI regulations to permit treating food or shelter that an individual receives from someone in whose household he or she lives and has an obligation to pay for at a future date as the basis for a loan. The Commissioner also gives notice that this Ruling supersedes SSR 78–26.

EFFECTIVE DATE: September 8, 1992.

FOR FURTHER INFORMATION CONTACT: Joanne K. Castello, Office of Regulations, Social Security Administration, 6401 Security Boulevard, Baltimore, MD 21235, (410) 965–1711.

SUPPLEMENTARY INFORMATION: Although we are not required to do so pursuant to 5 U.S.C. 552(a)(1) and (a)(2), we are publishing this Social Security Ruling in accordance with 20 CFR 422.406(b)(1).

Social Security Rulings make available to the public precedential decisions relating to the Federal old-age, survivors, disability, supplemental security income, and black lung benefits programs. Social Security Rulings may be based on case decisions made at all administrative levels of adjudication, Federal court decisions, Commissioner's decisions, opinions of the Office of the General Counsel, and other policy interpretations of the law and regulations.

Although Social Security Rulings do not have the force and effect of the law or regulations, they are binding on all components of the Social Security Administration, in accordance with 20 CFR 422.406(b)(1), and are to be relied upon as precedents in adjudicating other cases.

If this Social Security Ruling is later superseded modified, or rescinded, we will publish a notice in the **Federal Register** to that effect.

(Catalog of Federal Domestic Assistance Program No. 93.807 Supplemental Security Income.)

Dated: July 15, 1992.

Gwendolyn S. King,

Commissioner of Social Security.

Policy Interpretation Ruling

Title XVI: SSI Loan Policy, Including Its Applicability to Advances of Food and/or Shelter

Purpose: This Ruling defines a loan for SSI purposes. It also explains when the proceeds of a loan count as resources under SSI program, when they do not count as income, and how SSA treats a loan agreement when the lender is an SSI applicant or recipient. Social Security Ruling (SSR) 78–26 previously addressed these issues.

In addition, this Ruling reinterprets SSI regulations to permit treating, as the basis for a loan, food or shelter that an SSI applicant or recipient receives from someone in whose household he or she lives and has an obligation to pay for at a future date.

This Ruling supersedes SSR 78–26.

Citations (authority): Sections 1611 and 1631(e)(1)(B) of the Social Security Act, as amended; Regulations No. 16, subpart K, §§ 416.1103(f) and 416.1133(a).

Background: The Social Security Act, at section 1612(a)(2)(A), provides that unearned income includes in-kind support and maintenance. Regulations, at 20 CFR 416.1121(h), define in-kind support and maintenance as food, clothing, and shelter furnished to an SSI applicant or recipient. Regulations, at 20 CFR 416.1103(f), provide that the proceeds of a loan are not income.

In 1978, the Social Security Administration (SSA) published SSR 78–26, setting forth its policy regarding the treatment of loans under the SSI program. SSR 78–26 gave the following information:

When an individual borrows and receives money through a lending process, as a borrower, or receives money as repayment on an outstanding loan (lender), a determination must be made whether such money is considered a resource or income for SSI eligibility and payment purposes. Since inception of the SSI program, proceeds of a loan have not been considered income to the borrower because of the obligation to repay. Existing regulations do not spell this out. Similarly, since inception of the SSI program, outstanding loans made by an SSI applicant or recipient from money available to him/her have been considered a countable resource to the extent there has been a negotiable instrument showing existence of a loan agreement. This is because a negotiable instrument is convertible to cash and, therefore, meets the definition of a resource for SSI purposes. In such a case, the negotiable instrument would be a countable resource to the lender.

Existence of a negotiable instrument, however, is not the sole criterion of a bona fide loan. The interpretation of a bona fide loan for SSI purposes is that where a borrower receives money (from relatives, friends or others) a loan is created if there is an understanding between the parties that the money borrowed is to be repaid and it is recognized as an enforceable contract under State law. The transaction which creates a loan can be in the form of a written or oral agreement if enforceable under State law. Absent a negotiable instrument, a bona fide loan must still be convertible to cash in order to be considered a resource for SSI purposes.

Under this policy interpretation, a householder's advance of food or shelter to a household member could not be treated as a loan because it did not involve an actual advance of cash.

In 1986, in *Hickman* v. *Bowen* (803 F.2d 1377), the Fifth Circuit Court of Appeals ruled that there was no justification for treating cash and in-kind income differently under 20 CFR 416.1103(f). Since both are income, both could be the subject of a loan. The court concluded that food or shelter provided by a householder to a household member is a loan if the household member is obligated to repay the debt.

In 1988, SSA issued Acquiescence Ruling (AR) 88–7(5) to implement the *Hickman* decision for individuals residing in the States in the Fifth Circuit (Louisiana, Mississippi, and Texas). AR 88–7(5) instructed that when an SSI claimant or recipient alleges receiving in-kind support and maintenance, that in-kind support and maintenance will be considered a loan and its value will not be considered for the purpose of calculating SSI benefits, but only if the applicant or recipient can demonstrate that the in-kind support and maintenance received was, in fact, loaned to him or her in realistic anticipation of repayment, that he or she intends to repay the debt, and that under the terms of SSR 78–26 a bona fide loan agreement has been made.

In 1991, in *Ceguerra* v. *Secretary of Health and Human Services* (933 F.2d 735), the Ninth Circuit Court of Appeals issued an opinion which adopted the rationale of the Fifth Circuit Court of Appeals in *Hickman.* Absent a change in national policy, SSA acquiescence policy would thus require the issuance of another acquiescence ruling similar to AR 88–7(5) for individuals residing in the Ninth Circuit (Alaska, Arizona, California, Guam, Hawaii, Idaho, Montana, Nevada, Northern Mariana Islands, Oregon, and Washington).

In view of these recent court decisions, SSA has decided to reinterpret its regulations on the treatment in the SSI program of advances of food and shelter to an SSI

applicant or recipient by an individual in whose household he or she is residing.

Policy Interpretation: For purposes of determining when a loan is not considered income and when a loan is considered a countable resource under the SSI program, the following policies apply:

1. A loan means an advance from lender to borrower that the borrower must repay, with or without interest. A loan can be cash or an in-kind advance in lieu of cash. For example, an advance of food or shelter can represent a loan for the pro rata share of household operating expenses. This applies to any commercial or noncommercial loan (between relatives, friends or others) that is recognized as enforceable under State law. The loan agreement may be oral or written, as long as it is enforceable under State law.

2. Any advance an SSI applicant or recipient receives that meets the above definition of a loan is not income for SSI purposes since it is subject to repayment. Any portion of borrowed funds that the borrower does not spend as a countable resource to the borrower if retained into the month following the month of receipt.

3. When money or an in-kind advance in lieu of cash is given and accepted based on any understanding other than that it is to be repaid by the receiver, there is no loan involved for SSI purposes. It could be a gift, support payments, in-kind support and maintenance, etc., and must be treated as provided for in the rules applicable to such items.

4. If there is a bona fide loan as defined in (1) above, there is a rebutable presumption that the loan agreement is a resource of the lender for SSI purposes.

For example, an SSI applicant or recipient reports making a loan to a relative. The loan agreement is oral. The oral agreement is found to be binding under State law. Accordingly, the loan is presumed to be a resource of the lender because it can be converted to cash if the lender calls for repayment from the borrower. The lender can rebut this presumption by showing that the loan cannot be converted to cash—for example, because the borrower died without leaving an estate.

5. Money a lender receives as repayment of a loan (which meets the definition of a resource) reduces the outstanding loan balance and is considered a countable resource to the lender inasmuch as the repayment amount represents a return of part of the loan principal; i.e., the total value of the resource, which is the repayment amount plus the outstanding loan balance, remains unchanged.

6. Interest on a loan is counted as unearned income to the lender in the month of receipt and, if retained, is a resource as in (2) above.

Documentation: Evidence must be obtained with respect to the existence of a bona fide loan agreement. The burden of proof with respect to the bona fide nature of the loan is with the applicant or recipient.

Effective Date: The effective date of this Ruling is the date of its publication in the **Federal Register**. Determinations made before that date regarding advances of food or shelter may be reopened and revised subject to the rules of administrative finality at 20 CFR 416.1488(a).

The AR for the *Hickman* decision (AR 88–7(5)), is being rescinded through a sepatate publication in the **Federal Register**. However, anyone to whom the *Hickman* AR would have applied, had it remained in effect, may request application of the policy contained in this Ruling to determinations made by SSA between the date of the Fifth Circuit Court of Appeals decision (November 10, 1986) and the date this Ruling is published in the **Federal Register** if he or she first demonstrates that application of this Ruling could change the prior determination or decision. In addition, anyone to whom a *Ceguerra* AR would have applied, had one been issued, may request application of this Ruling to deteriminations made by SSA between the date of the Ninth Circuit Court of Appeals decision (May 15, 1991) and the date this Ruling is published in the **Federal Register** if he or she first demonstrates that application of this Ruling could change the prior determination or decision.

[FR Doc. 92–21519 Filed 9–4–92; 8:45 am]

BILLING CODE 4190–29–M

DEPARTMENT OF THE INTERIOR

Bureau of Land Management

[UTU–69956]

Utah; Invitation To Participate in Coal Exploration Program; Mountain Coal Co.

Mountain Coal Company is inviting all qualified parties to participate in its proposed exploration of certain coal deposits located approximately 11 miles northwest of Orangeville, Utah. The exploration area lies approximately four miles up Straight Canyon from its confluence with Cottonwood Creek. The lands are located in Emery County, Utah, and are described as follows:

T. 18 S., R. 6 E., SLM, Utah
Sec. 3, lots 3–6, S½NW¼.
Containing 226.41 acres.

Any party electing to participate in this exploration program must send written notice of such election to the Bureau of Land Management, Utah State Office, P.O. Box 45155, Salt Lake City, Utah 84145–0155, and to Mountain Coal Company, P.O. Box 1378, Price, Utah 84501. Such written notice must be received within 30 days after the publication of this notice in the **Federal Register**.

Any party wishing to participate in this exploration program must be qualified to hold a lease under the provision of 43 CFR 3472.1 and must share all cost on a pro rata basis. A copy of the exploration plan, as submitted by Mountain Coal Company, is available for public review during normal business hours in the BLM office, (Public Room, Fourth Floor), 324 South State Street, Salt Lake City, Utah under Serial Number UTU–69956.

Teresa Catlin,

Acting Chief, Branch of Lands and Minerals Operations.

[FR Doc. 92–21509 Filed 9–4–92; 8:45 am]

BILLING CODE 4310–DQ–M

[ID–020–4320–12]

Burley District Grazing Advisory Board; Meeting and Agenda

AGENCY: Burley District, Bureau of Land Management, Interior.

ACTION: Meeting and agenda for Burley District Grazing Advisory Board.

SUMMARY: Notice is hereby given that the Burley District Grazing Advisory Board will meet on October 8, 1992. The meeting will convene at 9:30 a.m. in the conference room of the Bureau of Land Management Office at 200 South Oakley Highway, Burley, Idaho.

Agenda items for the meeting will include: (1) Reorganization of the Board Leadership; (2) Status of FY–92 Range Improvement Projects; (3) Drought Impact on '92 Fall and '93 Spring Grazing Use; (4) proposed Mormon Cricket control activities in FY–93; (5) Review FY–93 and FY–94 Proposed Range Improvement Projects; (6) Secretary/Treasurer's Report; (7) District Fires and Relief Areas of Use; (8) Items of Information: (a) Districtwide "Resource management Plan" (RMP); (b) BLM 2015.

The public is invited to attend the meeting. Interested persons may make an oral statement to the Board beginning at 11:30 a.m. or they may file a written statement for the Board's consideration. Depending on the number of persons wishing to make oral statements, a per person time limit may be established by the District manager. Anyone wishing to make an oral statement or file a written statement must contact the District manager by October 7, 1992 for inclusion in the meeting schedule.

Detailed minutes of the Board meeting will be maintained in the District Office and will be available for public inspection during regular business hours (7:45 a.m. to 4:30 p.m., Monday thru Friday) within 30 days following the meeting.

DATE: October 8, 1992.

ADDRESS: Bureau of Land Management, Burley District Office, Route 3, Box 1, Burley, Idaho 83318.

FOR FURTHER INFORMATION CONTACT: Gerald L. Quinn, District Manager, (208) 678–5514.

Dated: August 28, 1992.

Marvin R. Bagley,

Associate District Manager.

[FR Doc. 92-21464 Filed 9-4-92; 8:45 am]

BILLING CODE 4310-66-M

[UT-020-02-4320-02]

Salt Lake District; Grazing Advisory Board Meeting

AGENCY: Bureau of Land Management, Interior.

ACTION: Notice of Grazing Advisory Board meeting.

SUMMARY: Notice is hereby given in accordance with Public Law 92-463 that the Salt Lake District Grazing Advisory Board will be meeting on October 15, 1992. The meeting will begin at 8:30 a.m. at the Salt Lake District, Bureau of Land Management, office at 2370 South 2300 West, Salt Lake City, Utah.

The purpose of the meeting will be to: (1) Elect New Board officers; (2) review FY 1992 range improvement accomplishments; (3) review proposed range improvement work for the upcoming year (FY 1993).

The meeting is open to the public. Interested persons may make oral statements at the meeting between 9 a.m. and 9:30 a.m., or file a written statement for the Board's consideration. Those wishing to make statements to the Board are requested to contact Glade Anderson at (801) 977-4300 by October 5th so that adequate time can be included on the agenda.

Deane H. Zeller,

Salt Lake District Manager.

[FR Doc. 92-21510 Filed 9-4-92; 8:45 am]

BILLING CODE 4310-DQ-M

National Park Service

Amendment to the Federal Register Notice for the Draft Comprehensive River Conservation Study and Environmental Impact Statement

AGENCY: National Park Service, Department of the Interior.

ACTION: Notice of Amendment to the Federal Register Notice for the Draft Comprehensive River Conservation Study and Environmental Impact Statement for the Hanford Reach of the Columbia River.

DATES: Public comments will be accepted until Friday, October 9, 1992.

ADDRESSES: Written comments should be sent to Kristen Sycamore, National Park Service, Pacific Northwest Regional Office, 83 South King Street, suite 212, Seattle, Washington 98104.

SUPPLEMENTARY INFORMATION: Public hearings to receive oral and written comments on this draft have been scheduled as follows:

Tuesday, September 8, 1992, at 7:00 p.m., Basin City Firehall, Road #170, Basin City, Washington

Wednesday, September 9, 1992, at 7:00 p.m., Federal Building Auditorium, 825 Jadwin Avenue, Richland, Washington

Monday, September 14, 1992, at 7:00 p.m., Henry M. Jackson Federal Building, South Auditorium, 915 Second Avenue, Seattle, Washington

Dated: August 27, 1992.

Willie R. Taylor,

Acting Director, Office of Environmental Affairs.

[FR Doc. 92-21550 Filed 9-4-92; 8:45 am]

BILLING CODE 4310-70-M

Native American Graves Protection and Repatriation Review Committee; Meeting

AGENCY: National Park Service, Department of the Interior.

ACTION: Notice of meeting of the Native American Graves Protection and Repatriation Review Committee.

Notice is hereby given in accordance with the Federal Advisory Committee Act (FACA), 5 U.S.C. Appendix (1988), that the third meeting of the Native American Graves Protection and Repatriation Act Review Committee will be held on October 8, 9, and 10, 1992 in Ft. Lauderdale, Florida.

The Committee will meet at the Sheraton Yankee Trader Hotel, 321 North Atlantic Blvd, Ft. Lauderdale, FL 33304. Meetings will begin each day at 9 a.m. and conclude not later than 5 p.m.

The Native American Graves Protection and Repatriation Act Review Committee was established by Public Law 101-601 to monitor, review, and assist in implementation of the inventory and identification process and repatriation activities required under the statute.

The matters to be discussed at this meeting include development of proposed regulations implementing the statute.

The meeting will be open to the public. However, facilities and space for accommodating members of the public are limited and persons will be accommodated on a first-come, first-served basis. Any member of the public may file a written statement concerning the matters to be discussed with Dr. Francis P. McManamon, Department Consulting Archeologist.

Persons wishing further information concerning this meeting, or who wish to submit written statements may contact Dr. Francis P. McManamon, Departmental Consulting Archeologist, Archeological Assistance Division, National Park Service, P.O. Box 37127, Washington, DC 20013-7127, Telephone (202) 343-4101. Draft summary minutes of the meeting will be available for public inspection about eight weeks after the meeting of the office of the Departmental Consulting Archeologist, room 210, 800 North Capitol Street, Washington, DC.

Dated: September 2, 1992.

Francis P. McManamon,

Departmental Consulting Archeologist, Chief, Archeological Assistance Division.

[FR Doc. 92-21551 Filed 9-4-92; 8:45 am]

BILLING CODE 4310-70-M

National Register of Historic Places; Notification of Pending Nominations

Nominations for the following properties being considered for listing in the National Register were received by the National Park Service before August 29, 1992. Pursuant to § 60.13 of 36 CFR part 60 written comments concerning the significance of these properties under the National Register criteria for evaluation may be forwarded to the National Register, National Park Service, P.O. Box 37127, Washington, DC 20013-7127. Written comments should be submitted by September 23, 1990.

Antoinette J. Lee,

Acting Chief of Registration, National Register.

California

Fresno County

Tower Theatre, 1201 N. Wishon Ave., Fresno, 92001276

Napa County

First National Bank, 1026 First St., Napa, 92001277

Yount, Eliza G., House, 423 Seminary St., Napa, 92001279

San Diego County

Kuchamaa, SE of San Diego at the US-Mexico border, Tecate vicinity, 92001268

Santa Cruz County

Lettunich Building, 406 Main St., Watsonville, 92001278

Florida

Palm Beach County

Aiken, Fred C., House, 801 Hibiscus St., Boca Raton, 92001271

Maryland

Anne Arundel County

Bates, Wiley H., High School, 1029 Smithville Street, Annapolis, 92001267

New York

Hamilton County

Hamilton County Courthouse Complex, Jct. of NY 8 and S. Shore Rd., Lake Pleasant, 92001280

Virginia

Accomack County

Onancock Historic District, Roughly bounded by Joynes Branch, Onancock Cr. and Lake, Kerr, Jackson, Market, Justice, Johnson and Holly Sts., Onancock, 92001266

Albemarle County

Enniscorthy, VA 627 .5 mi. S of jct. with VA 712, Keene vicinity, 92001273

Loudoun County

Douglass High School, 408 E. Market St., Leesburg, 92001274

Northumberland County

Ditchley, VA 607 N side, 2000 ft. E of jct. with VA 669, Kilmarnock vicinity, 92001272

Hurstville, VA 605 E side, 3500 ft. S of jct. with VA 606, Kilmarnock vicinity, 92001264

Alexandria Independent City

Rosemont Historic District, Roughly bounded by Commonwealth Ave., W. Walnut St., Russell Rd., Rucker Pl. and King St., Alexandria (Independent City), 92001275

Salem Independent City

Salem Post Office, 103 E. Main St., Salem (Independent City), 92001265

[FR Doc. 92–21552 Filed 9–4–92; 8:45 am]

BILLING CODE 4310–70–M

INTERNATIONAL TRADE COMMISSION

[Investigation No. 731–TA–622 (Preliminary)]

Dry Film Photoresist From Japan

Determination

On the basis of the record [1] developed in the subject investigation, the Commission determines,[2] pursuant to section 733(a) of the Tariff Act of 1930 (19 U.S.C. 1673b(a)), that there is a reasonable indication that an industry in the United States is materially injured or threatened with material injury by reason of imports from Japan of dry film photoresist, provided for in subheadings 3702.39.00, 3702.42.00, 3702.43.00, 3702.44.00, 3702.95.00, and 3707.90.30 of the Harmonized Tariff Schedule of the United States, that are alleged to be sold in the United States at less than fair value (LTFV).

[1] The record is defined in § 207.2(f) of the Commission's Rules of Practice and Procedure (19 CFR 207.2(f)).

[2] Commissioner Burnsdale dissenting; Vice Chairman Watson not participating.

Background

On July 16, 1992, a petition was filed with the Commission and the Department of Commerce by E.I. Du Pont de Nemours & Co., Wilmington, DE; Morton International, Inc., Tustin, CA; and Hercules Incorporated, Wilmington, DE, alleging that an industry in the United States is materially injured and threatened with material injury by reason of LTFV imports of the subject products from Japan. Accordingly, effective July 16, 1992, the Commission instituted antidumping investigation No. 731–TA–622 (Preliminary).

Notice of the institution of the Commission's investigation and of a public conference to be held in connection therewith was given by posting copies of the notice in the Office of the Secretary, U.S. International Trade Commission, Washington, DC, and by publishing the notice in the **Federal Register** of July 23, 1992 (57 FR 32810). The conference was held in Washington, DC, on August 6, 1992, and all persons who requested the opportunity were permitted to appear in person or by counsel.

The Commission transmitted its determination in this investigation to the Secretary of Commerce on August 31, 1992. The views of the Commission are contained in USITC Publication 2555 (August 1992), entitled "Dry Film Photoresist from Japan: Determination of the Commission in Investigation No. 731–TA–622 (Preliminary) Under the Tariff Act of 1930, Together With the Information Obtained in the Investigation.

Issued: September 1, 1992.

By order of the Commission.

Paul R. Bardos,

Acting Secretary.

[FR Doc. 92–21548 Filed 9–4–92; 8:45 am]

BILLING CODE 7020–02–M

[Investigation No. 731–TA–623 (Preliminary)]

Hairbrushes and Certain Parts and Components Thereof From the People's Republic of China

AGENCY: United States International Trade Commission.

ACTION: Notice of withdrawal of petition in antidumping investigation.

SUMMARY: On August 21, 1992, the U.S. Department of Commerce and the U.S. International Trade Commission received a letter from petitioner in the subject investigation (Goody Products, Inc., Kearny, NJ) withdrawing its petition. Commerce has not initiated an investigation as provided in section 732(c) of the Tariff Act of 1930 (19 U.S.C. 1673a(c)). Accordingly, the Commission gives notice that its antidumping investigation concerning hairbrushes and certain parts and components thereof from the People's Republic of China (investigation No. 731–TA–623 (Preliminary)) is discontinued.

EFFECTIVE DATE: August 21, 1992.

FOR FURTHER INFORMATION CONTACT: Jonathan Seiger (202–205–3183), Office of Investigations, U.S. International Trade Commission, 500 E Street SW., Washington, DC 20436. Hearing-impaired individuals are advised that information on this matter can be obtained by conatacting the Commission's TDD terminal on 202–205–1810.

Issued: September 1, 1992.

By order of the Commission.

Paul R. Bardos,

Acting Secretary.

[FR Doc. 92–21549 Filed 9–4–92; 8:45 am]

BILLING CODE 7020–02–M

[Investigation No. 337–TA–337]

Certain Integrated Circuit Telecommunication Chips and Products Containing Same, Including Dialing Apparatus; Commission Determination Not To Review an Initial Determination Designating the Investigation More Complicated; Setting of Administrative Deadline

AGENCY: U.S. International Trade Commission.

ACTION: Notice.

SUMMARY: Notice is hereby given that the U.S. International Trade Commission has determined not to review an initial determination (ID) issued by the presiding administrative law judge (ALJ) designating the above-captioned investigation "more complicated." The deadline for completion of the investigation has been extended by one month, *i.e.*, from April 8, 1993, to May 10, 1993.

ADDRESSES: Copies of the ID and all other nonconfidential documents filed in connection with this investigation are available for public inspection during official business hours (8:45 a.m. to 5:15 p.m.) in the Office of the Secretary, U.S. International Trade Commission, 500 E Street, SW., Washington, DC 20436, telephone 202–205–2000.

FOR FURTHER INFORMATION CONTACT: Daniel Hopen, Esq., Office of the General Counsel, U.S. International Trade Commission, 500 E Street, SW.,

Washington, DC 20436, telephone 202–205–3108.

Hearing-impaired individuals are advised that information about this matter can be obtained by contacting the Commission's TDD terminal, 202–205–1810.

SUPPLEMENTARY INFORMATION: On July 27, 1992, respondents Hualon Microelectronics Corporation (Taiwan), Hualon Microelectronics Corporation (California), and United Microelectronics Corporation (collectively "respondents") filed a joint motion to designate this investigation more complicated. The motion was supported by the Commission investigative attorneys, but opposed by complainant SGS-Thomson Microelectronics, Inc. The presiding ALJ issued an ID on August 5, 1992, designating the investigation "more complicated" and extending the deadline for issuance of his final ID by one month. The investigation was designated "more complicated" because of the large number of chips at issue involving complex technology and the short amount of time available for newly-added respondent Tranbon to prepare for the Commission hearing. No petitions for review or government agency comments were received.

This action is taken under the authority of section 337 of the Tariff Act of 1930 (19 U.S.C. 1337) and section 210.53 of the Commission's Interim Rules of Practice and Procedure (19 CFR 210.53).

Issued: August 31, 1992.

By order of the Commission.

Paul R. Bardos,

Acting Secretary.

[FR Doc. 92–21547 Filed 9–4–92; 8:45 am]

BILLING CODE 7020–02–M

INTERSTATE COMMERCE COMMISSION

[Finance Docket No. 321361]

William E. Gardner and Railroad Acquisition Corporation—Control Exemption—Wisconsin & Calumet Railroad Co., Inc.

William E. Gardner and Railroad Acquisition Corporation (RAC), (applicants), have filed a notice of exemption to acquire control of Wisconsin & Calumet Railroad Company, Inc. (WICT), a class III rail carrier operating over 408.6 miles of rail line between Clearing Yard, IL, and Prairie Du Chien, WI, and between various points in Wisconsin. Mr. Gardner controls RAC, a noncarrier. In addition, Mr. Gardner separately controls Wisconsin & Southern Railroad Company (W&S), a class III rail carrier operating over 148 miles of rail home in Wisconsin. Under the terms of the transaction RAC will purchase 100 percent of WICT's stock, and, after consummation, Mr. Gardner will be in control of two non-connecting class III rail carriers.[1] The parties planned to consummate the transaction on or after the effective date, August 21, 1992.

Applicants indicate that: (1) The lines operated by W&S do not connect with the lines operated by WICT; (2) the involved transaction is not a part of a series of anticipated transactions that would connect the railroads with each other; and (3) the transaction does not involve a class I carrier. The transaction is therefore exempt from the prior approval requirements of 49 U.S.C. 11343. See 49 CFR 1180.2(d)(2).

As a condition to the use of this exemption, any employees adversely affected by the transaction will be protected by the conditions set forth in *New York Dock Ry.—Control—Brooklyn Eastern Dist.*, 360 I.C.C. 60 (1979).

This notice is filed under 49 CFR 1180.2(d)(2). Petitions to revoke the exemption under 49 U.S.C. 10505(d) may be filed at any time. The filing of a petition to revoke will not automatically stay the transaction. Pleadings must be filed with the Commission and served on: David A. Hirsh, Pepper, Hamilton & Scheetz, 1300 Nineteenth St., NW., Washington, DC, 20036.

Dated: September 1, 1992.

By the Commission, Joseph H. Dettmar, Acting Director, Office of Proceedings,

Sidney L. Strickland, Jr.,

Secretary.

[FR Doc. 92–21537 Filed 9–4–92; 8:45 am]

BILLING CODE 7035–01–M

[Finance Docket No. 32106]

Bristol Industrial Terminal Railway—Lease and Operation Exemption—Frank A. Greek & Son, Inc.

Bristol Industrial Terminal Railway (Bristol) has filed a notice of exemption to lease and operate over approximately 2.2 miles of rail line extending between a connection with tracks owned by National Railroad Passenger Corporation (Amtrak) at Grundy [1] and a point within the Bristol Industrial Park, in Bristol Township, Bucks County, PA.[2] The proposed transaction was scheduled to be consummated on July 27, 1992, the notice's effective date.[3]

Any comments must be filed with the Commission and served on: Edward J. Rodriquez, P.O. Box 537, Old Saybrook, CT 06475.

This notice is filed under 49 CFR 1150.31. If the notice contains false or misleading information, the exemption is void *ab initio*. Petitions to revoke the exemption under 49 U.S.C. 10505(d) may be filed at any time.[4] The filing of a

[1] By decision served August 21, 1992, the Commission's Office of the Secretary granted a motion filed by applicants for a protective order covering their stock purchase agreement.

[1] Consolidated Rail Corporation (Conrail) provides freight service over the Amtrak line and maintains a station at Grundy.

[2] The line is owned in contiguous segments by Minnesota Mining & Manufacturing Company (3M) and Frank A. Greek & Son, Incorporated (Greek). Greek also owns an easement to operate over 3M's segment. Bristol has entered into a 5-year lease agreement with Greek; it will operate the entire rail line to serve businesses in the Bristol Industrial Park.

[3] In a concurrently filed motion, Bristol requests dismissal of the notice. It asserts that the line is an industrial spur, located entirely in one State, and therefore exempt from the Commission's licensing jurisdiction under 49 U.S.C. 10907(b).

There is no single test for determining whether a line segment is an exempt spur or a line of railroad subject to regulation. Over the years, the Commission has adopted a case-by-case analysis that considers the line's intended use, history, and physical characteristics. *See Texas & Pac. Ry.* v. *Gulf, Etc., Ry.*, 270 U.S. 266 (1926); *New Orleans Terminals Co.* v. *Spencer*, 366 F.2d 160 (5th Cir. 1966), *cert. denied*, 386 U.S. 942 (1967); *Illinois Commerce Com'n* v. *United States*, 779 F.2d 1270 (7th Cir. 1985); and *Nicholson* v. *ICC*, 711 F.2d 364 (D.C. Cir. 1983). Factors considered include the amount of traffic over the line, the availability of regularly scheduled service, the number of shippers being served, the existence of stations, and the weight of the rail used to construct the line. *See CNW—Aban. Exemp.—In McHenry County, IL*, 3 I.C.C.2d 366 (1987), *rev'd on other grounds, Illinois Commerce Com'n* v. *ICC*, 879 F.2d 917 (D.C. Cir. 1989); *United States* v. *Idaho*, 298 U.S. 105 (1936); and *New York Central R. Co.* v. *Chicago & Eastern Ill. R. Co.*, 222 F.2d 828 (7th Cir. 1955).

Bristol does not address these criteria in detail. it simply notes that the track is industrially owned and currently carries no freight. Bristol proposes, however, to provide switching services for businesses located, or to be located, in the Bristol Industrial Park and to interchange their traffic with Conrail at Grundy. Thus, the evidence presented is ambiguous; it is impossible to find that the track will be an exempt spur. Moreover, it is not controlling that the line could formerly have been characterized as a spur. Indeed, it is well established that a line's status can change from an "exempt spur" to a "line of railroad" subject to Commission regulation under 49 U.S.C. 10901–10906 because of an expansion of service. *See* Docket No. AB–52 (Sub-No. 71X), *Atchison, T. & S. F. Ry. Co.—Aband. Exemp.—in Lyon County, KS* (not printed), served June 17, 1991 (*Santa fe*).

[4] If, after evaluating its proposed operations against the criteria discussed above, Bristol still feels that its lease and operation is exempt under section 10907(b) it should file a petition to revoke this exemption, accompanied by specific evidence to support its position. *See Santa Fe, supra.*

petition to revoke will not automatically stay the transaction.

Dated: September 1, 1992.

By the Commission, Joseph H. Dettmar, Acting Director, Office of Proceedings.

Sidney L. Strickland, Jr.,

Secretary.

[FR Doc. 92-21538 Filed 9-4-92; 8:45 am]

BILLING CODE 7035-01-M

DEPARTMENT OF JUSTICE

Consent Judgment in Action To Enjoin Violations of the Clean Air Act

In accordance with Departmental policy, 28 CFR 50.7, notice is hereby given that a proposed consent decree in *United States* v. *General Motors Corporation,* Civil Action No. CV-92-5017-MRP(SHx), was lodged on August 20, 1992 with the United States District Court for the Central District of California.

The proposed consent decree requires payment of a $57,000 penalty by defendant for violations of the Clean Air Act. The consent decree also provides that defendant achieve compliance with the Clean Air Act and the volatile organic compound emission limit in the California State Implementation Plan.

The Department of Justice will receive, for a period of thirty (30) days from the date of this publication, comments relating to the proposed consent decree. Comments should be addressed to the Assistant Attorney General for the Environment and Natural Resources Division, Department of Justice, Washington, DC 20530, and should refer to *United States* v. *General Motors Corporation,* DOJ Ref. No. 90-5-2-1-986.

The proposed consent decree may be examined at the Office of the United States Attorney, Central District of California, 300 North Los Angeles Street, Los Angeles, California 90012; at the Region IX Office of the Environmental Protection Agency, 75 Hawthorne Street, San Francisco, California 94105; and at the Consent Decree Library, 601 Pennsylvania Avenue, NW., Box 1097, Washington, DC 20044. In requesting a copy, please refer to the referenced case and enclose a check in the amount of $4.00 (25 cents per page reproduction costs) payable to the Consent Decree Library.

Roger Clegg,

Deputy Assistant Attorney General, Environment and Natural Resources Division.

[FR Doc. 92-21465 Filed 9-4-92; 8:45 am]

BILLING CODE 4410-01-M

NATIONAL SCIENCE FOUNDATION

Permit Application Received Under the Antarctic Conservation Act of 1978

AGENCY: National Science Foundation.

ACTION: Notice of Permit Application Received Under the Antarctic Conservation Act of 1978, Public Law 95-541.

SUMMARY: The National Science Foundation (NSF) is required to publish notice of permit applications received to conduct activities regulated under the Antarctic Conservation Act of 1978. NSF has published regulations under the Antarctic Conservation Act of 1978 at title 45 part 670 of the Code of Federal Regulations. This is the required notice of permit applications received.

DATES: Interested parties are invited to submit written data, comments, or views with respect to this permit application by October 2, 1992. Permit applications may be inspected by interested parties at the Permit Office, address below.

ADDRESS: Comments should be addressed to Permit Office, room 627, Division of Polar Programs, National Science Foundation, Washington, DC 20550.

FOR FURTHER INFORMATION CONTACT: Thomas F. Forhan at the above address or (202) 357-7817.

SUPPLEMENTARY INFORMATION: The National Science Foundation, as directed by the Antarctic Conservation Act of 1978 (Public Law 95-541), has developed regulations that implement the "Agreed Measures for the Conservation of Antarctic Fauna and Flora" for all United States citizens. The Agreed Measures, developed by the Antarctic Treaty Consultative Parties, recommended establishment of a permit system for various activities in Antarctica and designation of certain animals and certain geographic areas as requiring special protection. The regulations establish such a permit system to designate Specially Protected Areas and Sites of Special Scientific Interest.

The applications received are as follows:

1. *Applicant:* Warren M. Zapol, M.D., Department of Anesthesia, Massachusetts General Hospital, Boston, MA 02114.

Activity for Which Permit Requested

Taking. Import into USA. As part of a research program to investigate how a highly adapted Antarctic marine mammal tolerates long periods of breath-holding and underwater exercise, up to 30 Weddell seals, (Leptonychotes weddelli) will be captured by corralling, up to 10 subadult males and up to 20 pregnant females. The females will be captured, instrumented, observed and ultimately released. Ten newborns and ten subadult males will be taken by lethal overdose of barbiturates for verification of myoglobin spectrophotometer measurements, obtaining biochemical assays and correlating ultrasound measurements. Organs and tissues of these animals will be imported to the USA for further study. Weddell seals are abundant in the study area, with stable populations.

Location

McMurdo Station, Antarctica, and the surrounding region.

Dates

10/1/92-4/1/93.

2. *Applicant:* R.G. Kroger, Project Director, Antarctic Support Associates, 61 Inverness Drive East, Suite 300, Englewood, CO 80112.

Activity for Which Permit Requested

Enter Site of Special Scientific Interest. The U.S. maintains a small summer field camp within SSSI #8 to support research within the SSSI (which is permitted separately). This request is for entry by a support contractor to allow routine light construction and maintenance work as needed at the site. Usually, this work is carried out by a four or five member crew of Palmer Station construction and maintenance personnel. No taking or other interference with indigenous species is planned.

Location

Admiralty Bay, King George Island, Antarctica.

Dates

10/1/1992-12/31/1998.

Thomas F. Forhan,

Permit Office, Division of Polar Programs.

[FR Doc. 92-21490 Filed 9-4-92; 8:45 am]

BILLING CODE 7555-01-M

NATIONAL SCIENCE FOUNDATION

Special Emphasis Panel in Networking and Communications Research and Infrastructure Amendment

The meeting of the Special Emphasis Panel in Networking and Communications Research and Infrastructure scheduled to be held on September 15, 1992 at the National Science Foundation in Washington DC has been changed to September 23-24, 1992.

The notice for this meeting originally appeared in the August 20, 1992 issue of the **Federal Register**, Vol. 57, No. 162, p. 37843.

Dated: September 2, 1992.

M. Rebecca Winkler,

Committee Management Officer.

[FR Doc. 92-21542 Filed 9-4-92; 8:45 am]

BILLING CODE 7555-01-M

SECURITIES AND EXCHANGE COMMISSION

[Release No. 34-31126; File No. SR-OCC-92-19]

Self-Regulatory Organizations; the Options Clearing Corp.; Filing and Order Granting Accelerated Approval on a Temporary Basis of a Proposed Rule Change Relating to Revisions to the Standards for Letters of Credit Deposited as Margin

September 1, 1992.

Pursuant to section 19(b)(1) of the Securities Exchange Act of 1934 ("Act"),[1] notice is hereby given that on July 29, 1992, The Options Clearing Corporation ("OCC") filed with the Securities and Exchange Commission ("Commission") the proposed rule change as described in Items I, II, and III below, which Items have been prepared primarily by the self-regulatory organization. The Commission is publishing this notice and order to solicit comments on the proposed rule change from interested persons and to grant accelerated approval on a temporary basis through December 31, 1992.

I. Self-Regulatory Organization's Statement of the Terms of Substance of the Proposed Rule Change

The proposed rule change extends the Commission's previous temporary approvals of OCC's modifications to its rules setting forth the standards for letters of credit deposited with OCC as a form of margin.

II. Self-Regulatory Organization's Statement of the Purpose of, and Statutory Basis for, the Proposed Rule Change

In its filing with the Commission, the self-regulatory organization included statements concerning the purpose of and basis for the proposed rule change and discussed any comments it received on the proposed rule change. The text of these statements may be examined at the places specified in Item IV below. The self-regulatory organization has prepared summaries, set forth in sections (A), (B), and (C) below, of the most significant aspects of such statements.

A. Self-Regulatory Organization's Statement of the Purpose of, and Statutory Basis for, the Proposed Rule Change

In August 1991, February 1992, and April 1992, OCC filed with the Commission proposed rule changes which proposed to modify the standards for letters of credit deposited with OCC as a form of margin. In turn, the Commission granted approval of each of the rule filings on an accelerated and temporary basis.[2] This filing again proposes to make permanent the Commission's temporary approval of OCC's modifications to its Rule 604 that sets forth the standards for letters of credit deposited with OCC as a form of margin. Like the previous filings, this filing proposes several modifications to that rule. First, in order to conform to the Uniform Commercial Code and to avoid any ambiguity as to the latest time for honoring payments upon letters of credit, letters of credit must state expressly that payment must be made prior to the close of business on the third banking day following demand. Second, letters of credit must be irrevocable. Third, letters of credit must expire on a quarterly basis. Fourth, OCC included language in its Rule 604 to make explicit OCC's authority to draw upon letters of credit at any time, whether or not the Clearing Member that deposited the letter of credit has been suspended or is in default, if OCC determines that such draws are advisable to protect OCC, other Clearing Members, or the general public.[3]

In the interim since its original letter of credit filing, OCC has received no adverse comments or complaints from any of its Clearing Members, banks, or other interested parties with respect to the modifications to Rule 604 or the implementation of the revised letter of credit standards. Accordingly, OCC requests that the Commission permanently approve those revisions.

OCC believes the proposed rule change is consistent with the requirements of section 17A of the Act, as amended. Specifically, OCC believes the proposed rule change promotes the protection of investors by enhancing OCC's ability to safeguard the securities and funds in its possession or subject to its control.

B. Self-Regulatory Organization's Statement on Burden on Competition

OCC does not believe that the proposed rule change will impose any burden on competition.

C. Self-Regulatory Organization's Statement on Comments on the Proposed Rule Change Received From Members, Participants, or Others

Comments were not and are not intended to be solicited with respect to the proposed rule change, and none were received.

III. Date of Effectiveness of the Proposed Rule Change and Timing for Commission Action

The Commission believes that the proposal is consistent with section 17A of the Act and specifically with section 17A(b) (3) (F) of the Act.[4] That section requires that the rules of a clearing agency be designed to assure the safeguarding of securities and funds which are in the custody or control of the clearing agency or for which the clearing agency is responsible. The revised standards should make such letters of credit more liquid instruments and, consequently, should permit OCC to more safely rely upon letters of credit deposited as margin. Because the revised standards will induce letter of credit issuers to reexamine Clearing Members' financial conditions every three months rather than annually, as under the prior standards, the financial condition of Clearing Members electing to deposit letters of credit as margin may be assessed more frequently thereby facilitating the discovery of any adverse developments in a more timely manner. In addition, since the letters of credit will be irrevocable, issuers of letters of credit will no longer be able to revoke letters of credit at times when the Clearing Members most need credit facilities (*e.g.*, when a Clearing Member is experiencing financial difficulties or during times of market volatility). By approving the proposed rule change on a temporary basis through December 31, 1992, OCC, the Commission, and other interested parties will be able to assess further, prior to permanent Commission

[1] 15 U.S.C. 78s(b)(1) (1988).

[2] Securities Exchange Act Release Nos. 29641 (August 30, 1991), 56 FR 46027 [File No. SR-OCC-91-13] (order temporarily approving proposed rule change through February 28, 1992); 30424 (February 28, 1992), 57 FR 8160 [File No. SR-OCC-92-06] (order temporarily approving proposed rule change through May 31, 1992); and 30763 (June 1, 1992), 57 FR 242884 [File No. SR-OCC-92-11] (order temporarily approving proposed rule change through August 31, 1992).

[3] For a detailed discussion of the modifications to OCC's rules governing letters of credit deposited as margin, refer to Securities Exchange Act Release No. 29641, *supra* note 2.

[4] 15 U.S.C. 78q-1(b)(3)(F) (1988).

approval, any effects these revised standards have on letter of credit issuance and on margin deposited at OCC.

OCC has requested that the Commission find good cause for approving the proposed rule change prior to the thirtieth day after the date of publication of notice of the filing. The Commission finds good cause for so approving because the Commission believes it is desirable that the proposed rule change be approved before the expiration of the Commission's previous order granting temporary approval of these modifications to the letter of credit standards. By approving this proposed rule filing before expiration of the prior temporary approval order, the changes that have been implemented pursuant to the temporary approval order may remain in place pending permanent approval.

IV. Solicitation of Comments

Interested persons are invited to submit written data, views, and arguments concerning the foregoing. Persons making written submissions should file six copies thereof with the Secretary, Securities and Exchange Commission, 450 Fifth Street, NW., Washington, DC 20549. Copies of the submission, all subsequent amendments, all written statements with respect to the proposed rule change that are filed with the Commission, and all written communications relating to the proposed rule change between the Commission and any person, other than those that may be withheld from the public in accordance with the provisions of 5 U.S.C. 552, will be available for inspection and copying in the Commission's Public Reference Section, 450 Fifth Street, NW., Washington, DC 20549.

Copies of such filing will also be available for inspection and copying at the principal office of the above-mentioned self-regulatory organization. All submissions should refer to File Number SR–OCC–92–19 and should be submitted by September 29, 1992.

V. Conclusion

On the basis of the foregoing, the Commission finds that OCC's proposed rule change is consistent with the Act and in particular with section 17A of the Act.

It is therefore ordered, under section 19(b)(2) of the Act, that the proposal (File No. SR–OCC–92–19) be, and hereby is, approved temporarily through December 31, 1992.

For the Commission by the Division of Market Regulation, pursuant to delegated authority.

Jonathan G. Katz,

Secretary.

[FR Doc. 92–21526 Filed 9–4–92; 8:45 am]

BILLING CODE 8010–01–M

[Release No. 34–31121; International Series No. 444; File Nos. SR–PSE–92–09 and SR–PSE–92–10]

Self-Regulatory Organizations; Pacific Stock Exchange, Inc.; Filing and Order Granting Accelerated Approval of Proposed Rule Changes Relating to the Listing of Index Warrants Based on the FT–SE Eurotrack 200 Index and the Eurotop 100 Index

August 28, 1992.

I. Introduction and Background

On February 18, 1992, the Pacific Stock Exchange, Inc. ("PSE") submitted to the Securities and Exchange Commission ("SEC" or "Commission"), pursuant to section 19(b)(1) of the Securities Exchange Act of 1934 ("Act")[1] and Rule 19b–4 thereunder,[2] proposed rule changes to list warrants based on the Financial Times-Stock Exchange ("FT–SE") Eurotrack 200 Index ("Eurotrack 200 Index") and the Eurotop 100 Index ("Eurotop 100 Index") (collectively referred to as the "Indexes").[3] This order solicits comments on the proposed rule changes and grants accelerated approval of these proposals.

II. Description of the Proposals

The PSE proposes to list index warrants based on the Eurotrack 200 Index and the Eurotop 100 Index, two broad-based indexes that are designed to represent substantial segments of the overall European stock market. The Commission previously has approved the listing of Eurotrack 200 Index warrants on the Chicago Board Options Exchange ("CBOE"), the American Stock Exchange ("Amex"), and the New York Stock Exchange ("NYSE") and the listing of Eurotop 100 Index warrants on the Amex.[4] The PSE is submitting its proposals to list warrants based on these Indexes pursuant to the requirements of a 1990 Commission order approving a PSE proposal that, among other things, permitted the Exchange to list index warrants based on established market indexes, both foreign and domestic ("Index Warrant Approval Order").[5]

A. Description of the Eurotrack 200 Index

The Eurotrack 200 Index is a capitalization-weighted stock index, designed and operated by the London Stock Exchange ("LSE"), based on the prices of 200 stocks, from 12 European countries that are traded on the LSE.[6] All of the Eurotrack 200 Index's component stocks are traded on the LSE by means of either the LSE's Stock Exchange Automated Quotation System ("SEAQ") or SEAQ International ("SEAQI").[7] The countries currently included in the Eurotrack 200 Index and their weightings as of January 21, 1992, are as follows: United Kingdom, 42.74%; Germany, 15.16%; France, 13.54%; Netherlands, 6.54%; Switzerland, 7.13%; Italy, 5.67%; Spain, 3.89%; Belgium, 2.67%; Sweden, 1.63%; Ireland, 0.6%; Denmark, 0.25% and Norway, 0.18%.

The Eurotrack 200 Index is a combination of two other stock indexes, the Eurotrack 100 Index and the FT–SE 100 Index, which also are designed and operated by the LSE. The FT–SE 100 Index component of the Eurotrack 200 Index is an internationally-recognized, capitalization-weighted stock index based on the prices of 100 of the most highly capitalized British stocks traded on the LSE.[8] The Commission previously

---

[1] 15 U.S.C. 78s(b)(1) (1982).

[2] 17 CFR 240.19b–4 (1989).

[3] The PSE submitted both proposals to the Commission on February 18, 1992. However, as discussed *infra* at notes 28–30 and accompanying text, the PSE was unable to obtain all necessary surveillance sharing agreements concerning the Indexes until May 21, 1992.

[4] See Securities Exchange Act Release Nos. 30462 (March 11, 1992), 57 FR 9290 (order approving SR-CBOE-91-13, SR-Amex-91-10 and SR-NYSE-91-13) ("Eurotrack 200 Approval Order") and 30462 (March 11, 1992), 57 FR 9284 (order approving SR-Amex 91-01) ("Eurotop 100 Approval Order"). The Eurotrack 200 Approval Order also approved the trading of Eurotrack 200 Index options on the CBOE and the Eurotop 100 Approval Order also approved the trading of Eurotop 100 Index options on the Amex. Additionally, the Commission sent a letter to the Commodity Futures Trading Commission ("CFTC") indicating it would not object to the designation of the Commodity Exchange, Inc. ("Comex") as a contract market to trade Eurotop 100 Index futures and options on Eurotop 100 Index futures. *See* letter from William H. Heyman, Director, Division of Market Regulation ("Division"), SEC, to Brian Folkerts, Director, Office of Congressional and Governmental Affairs, CFTC, dated May 27, 1992.

[5] See Securities Exchange Act Release No. 28034 (May 22, 1990), 55 FR 22001.

[6] For additional information regarding the design, construction, and operation of the Eurotrack 200 Index, *see* Eutrotrack 200 Approval Order, *supra* note 4 at notes 6–28 and accompanying text.

[7] The stocks in the Eurotrack 200 Index from the United Kingdom and the Republic of Ireland are traded over SEAQ and the stocks from the other European countries are traded over SEAQI. SEAQ's and SEAQI's quotations of the stocks are available to all exchanges listing those stocks, but the system is solely that of the LSE and its dealers and does not reflect markets from the other exchanges.

[8] The FT–SE 100 Index is composed of companies from 29 different industry groups, no one of which

Continued

has approved the listing of FT–SE 100 Index warrants on the CBOE, Amex, NYSE, PSE, and the Midwest Stock Exchange ("MSE") and the listing of FT–SE 100 options on the CBOE.[9] The Eurotrack 100 Index is a capitalization-weighted index based on 100 stocks from 11 European countries other than the United Kingdom that is designed to be a real-time index of major continental European securities.[10] Both the FT–SE 100 Index and the Eurotrack 100 Index have index rules designed to address corporate actions that involve one or more component companies, such as mergers, stock dividends, or rights offerings.

The Eurotrack 200 Index is calculated by multiplying the price of each constituent stock of the Eurotrack 100 and FT–SE 100 Indexes, converted into European Currency Units ("ECUs"), by the number of shares outstanding.[11] The value of the stocks in the Eurotrack 200 Index that also are in the FT–SE 100 Index, however, are reduced by a "Weight Restraint Factor ("WRF").[12] The Index will be calculated during an Official Index Period ("OIP"), which will run from 9:45 a.m. to 3:30 p.m., London time (4:45 a.m. to 10:30 E.S.T.).[13] An Official Index Closing Price ("OICP") for the Eurotrack 200 Index will normally be calculated each day at 3:30 p.m. London Time.

B. Description of the Eurotop 100 Index

The Eurotop 100 Index, an internationally-recognized stock index, developed and maintained by the European Option Exchange ("EOE") is designed to measure the collective performance of the most actively-traded stocks on the major European stock exchanges.[14] Specifically, the Index is based on the prices of 100 European stocks from nine countries. The Eurotop 100 Index is a weighted index [15] denominated in ECUS. The countries currently included in the Eurotop 100 Index and their weightings as of December 27, 1991, are as follows: United Kingdom, 27%; Germany, 14%; France, 14%; Switzerland, 10.5%; Spain, 9%; the Netherlands, 8%; Sweden, 8%; Italy, 6%; and Belgium, 3.5%.

In order to ensure that the Eurotop 100 Index reflects this active segment of the European stock market, there are specific Eurotop 100 Index Rules that determine: (1) The countries represented in the Index; (2) the base weightings of the countries in the Index; (3) the stocks from each country represented in the Index; and (4) the weightings of the stocks in the Index.[16]

Additionally, there are specific Eurotop 100 Index Rules designed to address corporate actions that involve one or more component companies, such as mergers, stock dividends, or rights offerings. Consistent with the design and operation of the Eurotop 100 Index, the Eurotop 100 Rules provide that any necessary changes will be done in such a way as to result in minimal changes in the value of the Eurotop 100 Index.[17] The EOE, for purposes of calculating the Eurotop 100 Index, will use the last sale price of each component stock in its own home currency, as reported by the principal stock exchange listing the stock in its home country. On an instantaneous and continuous basis, the value of each component stock in its respective home country currency first will be converted into either German marks or U.S. dollars and then into ECUs, based on the German mark or U.S. dollar/ECU lowest asked price at that moment as quoted by the foreign exchange institutions whose quotes are disseminated by Reuters PLC.[18]

C. Applicable Warrant Rules

Consistent with the Index Warrant Approval Order, the PSE represents that the Eurotrack 200 Index and Eurotop 100 Index warrant issues will conform to the listing guidelines under PSE Rule 3.2. Specifically, PSE Rule 3.2 provides that: (1) The issuer shall have assets in excess of $100,000,000 and otherwise substantially exceed the Exchange's size and earnings requirements; (2) the term of the warrants shall be for a period of at least one year from the date of issuance; and (3) the minimum public distribution of such issues shall be 1,000,000 warrants together with a minimum of 400 public holders, and have an aggregate market value of $4,000,000.[19]

The PSE proposes that the Eurotrack 200 Index and Eurotop 100 Index warrants will be direct obligations of their issuer subject to cash-settlement during their term, and either exercisable throughout their life (*i.e.*, American style) or exercisable only on their expiration date (*i.e.*, European style). Upon exercise, or at the warrant expiration date (if not exercisable prior to such date), the holder of a warrant structured as a "put" would receive payment in U.S. dollars to the extent that the Eurotrack 200 Index or the Eurotop 100 Index has declined below a pre-stated cash settlement value. Conversely, holders of a warrant structured as a "call" would, upon exercise or at expiration, receive

---

dominates the FT–SE 100 Index. The total capitalization of the FT–SE 100 Index, as of October 30, 1991, was $521.6 billion.

[9] See Securities Exchange Act Release Nos. 27769 (March 6, 1990), 55 FR 9380 (order approving File No. SR–Amex–90–3); 28106 (June 12, 1990), 55 FR 24955 (order approving File No. SR–PSE–90–15); 28399 (August 30, 1990), 55 FR 37390 (order approving SR–NYSE–90–37); 28627 (November 19, 1990) (order approving SR–CBOE–90–17); 28634 (November 20, 1990), 55 FR 49729 (order approving File No. SR–MSE–90–12); and 29722 (September 23, 1991), 56 FR 49809 (order approving SR–CBOE–91–07).

[10] For additional information regarding the Eurotrack 100 Index, *see* Eurotrack 200 Approval Order, *supra* note 4, at notes 15–24 and accompanying text. Additionally, the PSE, Amex, CBOE, and NYSE have submitted proposals to list warrants based on the Eurotrack 100 Index. *See e.g.*, Securities Exchange Act Release No. 29078 (April 15, 1991), 56 FR 16132 (notice of File No. SR–CBOE–91–14).

[11] As with the FT–SE 100 and Eurotrack 100 Indexes, the prices used are derived by taking the mid-point between the highest bid and the lowest offer displayed on SEAQ or SEAQI. Stock prices are converted from home currency prices into U.S. dollars, then converted from U.S. dollars into ECUs. The foreign exchange rates used in the calculation of the Eurotrack 200 Index are supplied by Telerate Inc. See Eurotrack 200 Approval Order, *supra* note 4.

[12] After making this adjustment for the FT–SE 100 Index stocks, the index calculator then divides the sum of the product of the price times shares outstanding, for all Eurotrack 200 Index stocks, by the total market capitalization of the Index ("the divisor") on the base date, February 25, 1991. The divisor is changed, as appropriate, to reflect certain corporate actions involving constituent companies, such as stock dividends, and to maintain the continuity of the Index.

[13] The OIP covers the time period when all the quotes for stocks within the Index are firm (*i.e.*, the LSE's Mandatory Quote Period). For a discussion of "firm" quotes, *See* Eurotrack 200 Approval Order, *supra* note 4.

[14] For additional information regarding the design, construction, and operation of the Eurotop 100 Index, see Eurotop 100 Approval Order, *supra* note 4, at notes 6–23 and accompanying text.

[15] The Eurotop 100 Index is neither price-weighted nor capitalization-weighted. Instead, the EOE utilizes a weighing process based on the relative capitalizations of each component country's primary stock market and the relative Gross National Product ("GNP") of each country to determine each country's representation in the Eurotop 100 Index. The EOE uses another process based on share price and trading volume to determine the weighing of each stock included in the Eurotop 100 Index. See Eurotop 100 Approval Order.

[16] In order to ensure that the Eurotop 100 Index will remain representative of the most actively-traded stocks on the major European stock exchanges, the EOE reviews country weightings biennially. By contrast, the EOE reviews Eurotop 100 Index stock selections and stock weightings on an annual basis based on the monetary share volumes of the stocks over the three prior calendar years.

[17] See Eurotop 100 Approval Order, *supra* note 4.

[18] Accordingly, Index values will reflect the last available component stock prices converted into ECUs. Nonetheless, in the event that there is no price change in a component stock, its value will be continuously updated to reflect any changes in the home currency/U.S. dollar or German mark/ECU exchange rates.

[19] In addition, the PSE proposes to trade warrants on the Indexes on an unlisted trading privilege basis. To do so, the PSE would have to make a separate application under section 12(f) of the Act for each such warrant issue.

payment in U.S. dollars to the extent that the Eurotrack 200 Index or Eurotop 100 Index has increased above the pre-stated cash settlement value. If "out-of-the-money" at the time of expiration, the warrants would expire worthless.

Consistent with the Index Warrant Approval Order, trading in warrants on the Indexes will be subject to several safeguards designed to ensure investor protection. First, the Exchange has recommended to its members that they should sell warrants on the Indexes only to options-approved accounts. In addition, the Exchange's options suitability standard will apply to recommended Eurotrack 200 Index and Eurotop 100 Index warrant transactions. Moreover, pursuant to PSE Rule 9.18(c), a Senior Registered Options Principal or Registered Options Principal will be required to approve and initial a discretionary order in Eurotop 100 Index or Eurotrack 200 Index warrants on the day the order is entered. Furthermore, the PSE, prior to the commencement of trading of Eurotrack 200 Index or Eurotop 100 Index warrants, will distribute circulars to its membership calling attention to the specific risks associated with warrants on the Eurotrack 200 Index or the Eurotop 100 Index.

III. Discussion

The Commission finds that the proposed rule changes are consistent with the requirements of the Act and the rules and regulations thereunder applicable to a national securities exchange and, in particular, the requirements of Section 6(b)(5).[20] Specifically, the Commission finds that the trading of warrants on the Eurotrack 200 and Eurotop 100 Indexes will serve to protect investors, promote the public interest, and help to remove impediments to a free and open securities market by providing investors with a means to hedge exposure to market or systematic risk associated with European stock investments.[21] The trading of warrants on the Eurotrack 200 Index and the Eurotop 100 Index, however, raises several concerns, namely, issues related to index design, customer protection, surveillance, and market impact. The Commission believes, for the reasons discussed below, that the PSE has adequately addressed these concerns.

A. Index Design and Structure

As discussed more fully in the Eurotrack 200 Approval Order and the Eurotop 100 Approval Order, the Commission finds that the broad-based nature of both of these Indexes significantly minimizes the potential for manipulation of either Index.[22] First, the total capitalization of the Eurotrack 200 Index and the Eurotop 100 Index, as of January 1992, were both over U.S. $900 billion. Second, the stocks in each Index include stocks from a wide range of European industry sectors. Although the component stocks in neither Index are selected to achieve a specified industry representation, 25 industry groups are represented in the Eurotrack 200 Index and 24 industry groups are represented in the Eurotop 100 Index. Third, neither Index is dominated by a stock or group of stocks. Specifically, the ten most highly-weighted stocks accounted for only 19.12% of the Eurotop 100 Index and 21.84% of the Eurotrack 200 Index. Fourth, the component stocks in each Index are actively traded. Finally, the Commission believes that the rules for each index governing, among other things, the selection of countries included in the Indexes, the stocks included in the Indexes, and the periodic review of the composition and weighing of the Indexes will serve to ensure that both the Eurotrack 200 Index and the Eurotop 100 Index maintain their broad representative sample of actively-traded European stocks. Accordingly, the Commission finds that the Eurotrack 200 Index and the Eurotop 100 are broad-based indexes.

B. Customer Protection

The Commission believes that a regulatory system designed to protect public customers must be in place before the trading of sophisticated financial instruments, such as Eurotrack 200 Index warrants and Eurotop 100 Index warrants, can commence on a national securities exchange. The Commission notes that, consistent with the Index Warrant Approval Order, specific rules and procedures of the PSE that address the special concerns attendant to the secondary trading of index warrants will be applicable to warrants based on the Indexes. In particular, by imposing the special suitability, disclosure, and compliance requirements noted above, the Exchange has addressed adequately the potential public customer problems that could arise from the derivative nature of warrants on the Eurotrack 200 Index and the Eurotop 100 Index. Moreover, the PSE plans to distribute circulars to its membership calling attention to the specific risks associated with warrants on the Eurotrack 200 Index and Eurotop 100 Index, and, pursuant to the Exchange's listing guidelines, only substantial companies capable of meeting their warrant obligations will be eligible to issue warrants on the Indexes.

Warrants, unlike standardized options, do not contain a clearinghouse guarantee but are instead dependent upon the individual credit of the issuer. This heightens the possibility that an exerciser of warrants may not be able to receive full cash settlement upon exercise. To some extent this risk is minimized by the Exchange's standard that warrant issuers possess at least $100,000,000 in assets. In any event, financial information regarding the issuers of Eurotrack 200 Index warrants and Eurotop 100 Index warrants will be disclosed or incorporated in the prospectuses accompanying the offerings of the warrants.

There is a systemic concern, however, that broker-dealers or broker-dealer subsidiaries issuing index warrants or providing a hedge for an issuer of index warrants will incur position exposure. This position exposure, if left partially hedged or dynamically hedged, not only creates a risk of non-performance by the issuer but also adds a systemic risk in that the broker-dealer will have to hedge dynamically the position exposure to minimize losses should the market turn against it. To date, the warrant issuances have been so small in relation to a broker-dealer issuer's (or underwriter's) total equity positions as not to raise significant concerns. Nevertheless, the Exchange should continue to monitor this area.

C. Surveillance

In evaluating new derivative instruments, the Commission, consistent with the protection of investors, considers the degree to which the derivative instrument is susceptible to

---

[20] 15 U.S.C. 78f(b)(5) (1988).

[21] Pursuant to section 6(b)(5) of the Act, the Commission must predicate approval of any new derivative product proposal upon a finding that the introduction of such new derivative instrument is in the public interest. Such a finding would be difficult with respect to a derivative instrument that served no hedging or other economic function, because any benefits that might be derived by market participants would likely be outweighed by the potential for manipulation, diminished public confidence in the integrity of the markets, and other valid regulatory concerns. In this regard, the trading of warrants on the Indexes will provide investors with hedging vehicles that should reflect the overall movement of the European stock market. The Commission also believes that these warrants will provide investors with a means by which to make investment decisions in the European equity market Specifically, warrants on the Indexes will allow investors to establish positions or increase existing positions in European stocks in a cost effective manner.

[22] See Eurotrack 200 Approval Order, *supra* note 4, at notes 43–44 and accompanying text and Eurotop 100 Approval Order, *supra* note 4, at notes 34–35 and accompanying text.

manipulation. The ability to obtain information necessary to detect and deter market manipulation and other trading abuses is a critical factor in the Commission's evaluation.[23] It is for this reason that the Commission has required that there be an effective surveillance sharing agreement in place between an exchange listing or trading a derivative product and the exchange(s) trading the stocks underlying the derivative contract that specifically enables officials to surveil trading in the derivative product and its underlying stocks.[24] Such agreements provide an important deterrent to manipulation because they facilitate the availability of information needed to fully investigate a potential manipulation if it were to occur. For foreign stock index derivative products, these agreements are especially important to facilitate the collection of necessary regulatory, surveillance and other information from foreign jurisdictions.

The Commission has considered the adequacy of surveillance sharing arrangements in the context of several types of derivative products, including derivative products based on stock indexes comprised of component securities from one country ("single country indexes") and indexes comprised of component securities from several countries ("multi-country indexes"). In the context of derivative securities products based on single country indexes, the Commission consistently has required the U.S. exchange that proposes to trade a derivative product to establish an effective surveillance sharing arrangement with the primary foreign stock market where the underlying securities are traded. For example, the Commission approved the trading of warrants based on the FT–SE 100 Index and the CAC–40 Index which are broad-based indexes representative of the U.K. and French stock markets, respectively. In these two instances, the Commission required that there be an effective surveillance sharing agreement in place between the relevant U.S. exchange and the relevant underlying foreign exchange because the indexes were limited to one country, thus enabling a potential manipulation to be based on the securities of a single market.[25]

In the context of derivative products based on multi-country indexes, such as the Eurotrack 200 Index and the Eurotop 100 Index, the Commission considers several factors in evaluating whether these instruments are readily susceptible to manipulation. The presence of effective surveillance sharing agreements is one factor in this evaluation. In many cases, without effective surveillance sharing agreements, the Commission would be unable to approve the proposed product. The Commission, however, recognizes that the construction of an index, including the diversification and active and deep markets for component securities, can mitigate against the need to require that effective surveillance sharing agreements be concluded with all of the markets whose securities underlie an index. Indeed, the Commission has approved or commented favorably upon derivative products based on the International Market Index ("IMI") and the Europe, Australia, Far East ("EAFE") Index, even though all of the stocks comprising these indexes were not covered by an effective surveillance sharing agreement.[26] In both cases, the stocks from countries with a major index weighing were covered by effective surveillance sharing agreements and no single uncovered country's securities accounted for more than a small percentage of the index's weight. This made it very unlikely that a successful manipulation could be based on the markets that did not have effective surveillance sharing agreements with the derivative exchange.

The PSE has effective surveillance sharing agreements with the home markets for 62.8% and approximately 50% of the stocks comprising the Eurotrack 200 Index and the Eurotop 100 Index, respectively. For the reasons discussed below, the Commission believes this is not problematic. Specifically, the Indexes contain several features that make it difficult to engage in intermarket abuses (such as manipulation or front running) using Eurotrack 200 Index warrants or Eurotop 100 Index warrants. As noted above, both Indexes are comprised of the most highly-capitalized, actively-traded securities from a large number of European countries.[27] Accordingly, because the component securities of both Indexes are spread over a large number of European countries, are diversified by industry sector, and are adjusted in accordance with specific rules designed to maintain specific weightings and relationships, the Commission believes it would be considerably more difficult to affect the value of either the Eurotrack 200 Index or the Eurotop 100 Index because to do so would require influencing simultaneously several foreign markets.

In addition, as noted above, while the PSE does not have effective surveillance sharing agreements with all of the countries comprising the Indexes, no single uncovered country's securities account for 20% or more of the weighing of either Index and no two uncovered countries' securities account for 30% or more of the weighing of either Index. In particular, the Commission notes that the PSE has concluded effective surveillance sharing agreements with the relevant self-regulatory

[23] The Commission also notes that the PSE will apply its existing index warrant surveillance procedures to trading in Eurotrack 200 Index warrants and Eurotop 100 Index warrants.

[24] The Commission believes that the ability to obtain relevant surveillance information, including, among other things, the identity of the ultimate purchasers and sellers of securities, is an essential and necessary component of an effective surveillance sharing agreement.

[25] See, e.g., Securities Exchange Act Release No. 27769 (March 6, 1990), 55 FR 9380 (order approving the listing and trading of FT–SE 100 warrants on the Amex) and Securities Exchange Act Release No. 28544 (October 17, 1990), 55 FR 42792 (order approving the listing and trading of CAC–40 warrants on the Amex). In addition, in light of unique circumstances, the Commission has approved some U.S. exchange proposals to trade index warrants based on the Japanese equity market without the presence of direct surveillance sharing arrangements between these exchanges and the Tokyo Stock Exchange. In these instances, the Commission relied on, among other things, the existence of a Memorandum of Understanding between the SEC and the Japanese Ministry of Finance ("MOF") which could provide the Commission with information that would be covered by an effective surveillance sharing agreement, and the history of cooperation between the Commission and the MOF. Notwithstanding, the Commission continues to believe in the importance of sharing agreements between the derivative and underlying cash markets. Accordingly, we have urged the U.S. markets to secure surveillance sharing agreements with the TKE as soon as possible. See Securities Exchange Act Release Nos. 30256 (January 16, 1992), 57 FR 2797 and 31016 (August 11, 1992), 57 FR 37012.

[26] See Securities Exchange Act Release No. 26653 (March 21, 1989), 54 FR 12705 (order approving an Amex proposal to list and trade options based on the IMI) and letter from Jonathan G. Katz, Secretary, SEC, to Dr. Paula Tosini, Director, Division of Economic Analysis, CFTC, dated October 11, 1988 (letter not objecting to the designation of the Chicago Mercantile Exchange as a contract market to trade EAFE stock index futures).

[27] Stocks from nine countries are represented in the Eurotop 100 Index and stocks from 12 countries are represented in the Eurotrack 200 Index. The stocks from the three countries that are not included in the Eurotop 100 Index (Ireland, Norway, and Denmark) comprise only 1.03% of the value of the Eurotrack 200 Index.

organizations in the U.K.,[28] France,[29] and the Netherlands,[30] three of the countries with large weightings within the Indexes. In this regard, the Commission emphasizes, that if there were a country accounting for 20% or more of either Index that was not covered by an effective surveillance sharing agreement (or two countries accounting for 30%), then it would be difficult for the Commission to reach the conclusions contained in this order.[31]

In sum, the Commission believes that the Eurotrack 200 Index and the Eurotop 100 Index are not readily susceptible to manipulation, and that if a manipulation were nonetheless to occur, it could be easily detected. As noted above, the component securities of the Indexes are spread over a large number of European countries, the Indexes are broad-based, a substantial portion of each Index is covered by effective surveillance sharing agreements, and the weighing in each Index of the securities of any country without an effective surveillance sharing agreement is relatively small.

While reaching this conclusion, the Commission nevertheless continues to believe strongly that surveillance sharing agreements between the PSE and all the exchanges trading component securities of the Indexes would be useful in deterring and detecting potential manipulations or other improper or illegal trading involving warrants on the Eurotrack 200 Index and the Eurotop 100 Index. Accordingly, the Commission believes it is worthwhile for the PSE and the relevant foreign exchanges to continue to work together to consummate formal effective surveillance sharing agreements as soon as practicable.[32]

D. Market Impact

The Commission believes that the listing and trading of Eurotrack 200 Index warrants and Eurotop 100 Index warrants on the PSE will not adversely impact the securities markets in the U.S. or Europe. First, as previously described, the PSE's existing stock index warrant rules and surveillance procedures will apply to warrants based on the Indexes. Second, the Commission notes that both Eurotrack 200 Index and the Eurotop 100 Index are broad-based and diversified and include highly capitalized and actively-traded securities, no one of which dominates either Index. Accordingly, the Commission believes that the introduction of warrants on the Eurotrack 200 Index and the Eurotop 100 Index by the PSE should not have a significant effect on the underlying European securities markets or U.S. securities markets.

The Commission finds good cause for approving the proposed rule changes prior to the thirtieth day after the date of publication of notice of filing thereof in the Federal Register. The Commission notes that PSE's proposals to trade warrants based on the Eurotrack 200 Index and the Eurotop 100 Index are identical to proposals by other U.S. securities to trade warrants based on these Indexes. The other exchange's proposals for these products were subject to the full notice and comment period and the Commission did not receive any comments on them. Accordingly, the Commission does not find any different regulatory issues arising out of the current PSE proposals. Therefore, the Commission believes it is consistent with section 6(b)(5) of the Act to approve the PSE's proposals on an accelerated basis.

IV. Solicitation of Comments

Interested persons are invited to submit written data, views and arguments concerning the proposed rule changes. Persons making written submissions should file six copies thereof with the Secretary, Securities and Exchange Commission, 450 Fifth Street, NW., Washington, DC 20549. Copies of the submission, all subsequent amendments, all written statements with respect to the proposed rule change that are filed with the Commission, and all written communications relating to the proposed rule changes between the Commission and any person, other than those that may be withheld from the public in accordance with the provisions of 5 U.S.C. 552, will be available for inspection and copying in the Commission's Public Reference Section, 450 Fifth Street, NW., Washington, DC. Copies of such filings will also be available for inspection and copying at the principal office of the above-mentioned self-regulatory organization. All submissions should refer to the respective file numbers in the caption above and should be submitted by September 29, 1992.

IV. Conclusion

For the reasons set forth above, the Commission finds that the proposed rule changes are consistent with the requirement of the Act and the rules and regulations thereunder applicable to a national securities exchange, and, in particular, the requirements of section 6(b)(5) and the rules and regulations thereunder.

It therefore is ordered, pursuant to section 19(b)(2) of the Act,[33] that the proposed rule changes (SR–PSE–92–09 and SR–PSE–92–10) are approved.

For the Commission, by the Division of Market Regulation, pursuant to delegated authority.[34]

Jonathan G. Katz,

Secretary.

[FR Doc. 92–21527 Filed 9–4–92; 8:45 am]

BILLING CODE 8010–01–M

[Release No. 34–31120; International Series No. 443; File No. SR–PHLX–91–08]

Self-Regulatory Organization; Filing of Proposed Rule Change by the Philadelphia Stock Exchange, Inc., Relating to Rule 1016—Block Transactions in Foreign Currency Options

August 28, 1992.

Pursuant to section 19(b)(1) of the Securities Exchange Act of 1934 ("Act"), 15 U.S.C. 78s(b)(1), notice is hereby given that on April 28, 1992, the Philadelphia Stock Exchange, Inc. ("PHLX" or "Exchange") filed with the Securities and Exchange Commission ("Commission" or "SEC") the proposed rule change as described in Items I, II, and III below, which Items have been prepared by the self-regulatory organization. The Commission is publishing this notice to solicit

---

[28] See Memorandum of Understanding Concerning the Provision of Information for the Purpose of Regulation and Enforcement between The Securities Association and the PSE, dated May 1, 1990.

[29] See Memorandum of Understanding Concerning the Listing of Securities Linked with an Index and the Furnishing of Information for the Purpose of Regulation and Enforcement between the Societe Des Bourse Francaises and the PSE, dated October 9, 1990. See also Administrative Agreement between the U.S. Securities and Exchange Commission and the Commission des Operations de Bourse de France, dated December 14, 1989, 45 SEC Docket 726, January 12, 1990.

[30] See Memorandum of Understanding Concerning the Provision of Information for the Purpose of Regulation and Enforcement between the Amsterdam Stock Exchange and the PSE, dated May 21, 1992.

[31] In addition, in the event that the percentage weightings of the countries included in either Index changed so that a country without an effective surveillance sharing agreement comprised greater than 20% of either Index (or two countries accounted for 30% or more), then the Commission would consider the PSE's determination to continue to list additional warrants based on such Index to be a material change in the PSE's listing standards, requiring the filing of a proposed rule change pursuant to section 19(b) of the Act.

[32] In this regard, the PSE agrees to report yearly to the Commission over the next three years detailing its efforts to secure effective surveillance sharing agreements with the uncovered countries. See letter from David P. Semak, Vice President, Regulation, PSE, to Thomas R. Gira, Branch Chief, Options Regulation, Division, dated June 26, 1992.

[33] 15 U.S.C. 78s(b) (1982).

[34] 17 CFR 200.30–3(a)(12) (1989).

comments on the proposed rule change from interested persons.

I. Self-Regulatory Organization's Statement of the Terms of Substance of the Proposed Rule Change

The PHLX, pursuant to Rule 19b–4 of the Act, proposed to add PHLX Rule 1016—Block Transactions in Foreign Currency Options.[1] The proposed rule change would permit foreign currency options orders of 1,000 contracts or more to trade utilizing special procedures applicable to such block transactions. A copy of proposed PHLX Rule 1016 is attached as *Exhibit A.*

II. Self-Regulatory Organization's Statement of the Purpose of, and Statutory Basis for, the Proposed Rule Change

In its filing with the Commission, the self-regulatory organization included statements concerning the purpose of, and basis for, the proposed rule change and discussed any comments it received on the proposed rule change. The text of these statements may be examined at the places specified in Item IV below. The self-regulatory organization has prepared summaries, set forth in sections (A), (B), and (C) below, of the most significant aspects of such statements.

A. Self-Regulatory Organization's Statement of the Purpose of, and Statutory Basis for, the Proposed Rule Change

The PHLX proposes to establish a "Block Rule" for the trading of foreign currency options. Specifically, in order to provide quick executions at a single price to trades over 1,000 contracts, the PHLX proposes the following block execution procedure: a floor broker with a block order shall quote the market in a particular foreign currency option, announce that a block quotation for a specified number of contracts over 1,000 is sought, and ascertain from the trading crowd response the best price at which the entire order can be executed. This price—the block price—shall be the price at which the entire block order is executed. Contrary to present permitted practice, this block trade may occur at a price that is not within the market first quoted to the broker. Markets given in response to a request for a block quote are provided specifically for the inquiring individual in possession of the block order and such quotes are not firm for anyone else at the time, but nonetheless must be made in a loud and audible fashion.

Additionally, the block order execution procedures proposed by the PHLX provide for priority among categories of those contra-side interests competing in the crowd for participation in the block trade. The proposed priority of categories among contra-side interests can best be understood by the following example. The market first quoted was 16–20, and in response to a request for a block quote for 3,000 contracts, the market given was 12–23, 3,000 contracts on each side; the floor broker executes a block order to buy 3,000 at 23. First, priority goes to customer orders of less than 100 contracts offering from 20 to 23. Second, thereafter priority is accorded to the interest that constituted the best offer when the floor broker first quoted the market, but before the block order was announced. Thus, any offer at 20 is executed next. Third, interests of 1,000 contracts or more at prices better than the block price receive priority. For example, offers of 21 and 22, of at least 1,000 contracts fall into this category. Fourth, any eligible interest of at least 200 contracts at the block price or better, such as offers of 21, 22 or 23, receive next priority. Finally, any remaining portion of a block order can be executed against any remaining eligible interests, such as offers of 21 through 23, for less than 200 contracts. Under this example, all of the executions occur at a price of 23, the "clean-up price," despite the offer being for a lower price, such as 21 or 22. The Exchange indicates that the purpose of arranging priority in this fashion is twofold. First, the Exchange believes that ensuring that customer orders of under 100 contracts are always afforded top priority to participate at the block price is consistent with the Exchange's commitment to the retail public investor. Second, the Exchange believes that providing the opportunity for a trader in the crowd, or off-floor interest, to increase his participation (over that of pro-rata parity split) by voicing a market quicker and larger than others will foster competition in the crowd resulting in better and faster executions of block sized orders. Accordingly, the Exchange believes that the proposal will enable the PHLX to more effectively compete with the over-the-counter ("OTC") foreign currency options market for block orders.

With respect to priority among orders of the same category, the PHLX points out that within each of the aforementioned categories priority among those interests shall be determined in accordance with the Exchange's rules regarding the parity and priority of foreign currency options orders, as enumerated in PHLX Rules 1014(h) and 119. For example, within the third category in the example above (offers of 1,000 contracts or more at prices better than the block price) priority is given to the 21 offer, the better price. If a portion of the block order remains after all offers of 1,000 at 21 are satisfied, priority is next given to the offers at 22, also within the third category. In addition, notwithstanding the above, the proposal also provides that any bid or offer, regardless of which category of contra-side interest it is in, for the account of an Exchange member which relies on the exemption under Section 11(a)(1)(G) of the Act must yield priority to any bid or offer for the account of a customer.

The PHLX believes that its proposal will attract block orders presently directed predominantly to the OTC market, thereby increasing the liquidity of the PHLX's foreign currency options market. Moreover, the Exchange believes that customers choosing to trade on the PHLX, as opposed to the OTC market, will enjoy the significantly greater protections afforded by an exchange regulated market environment. The PHLX also notes that its proposed procedures for foreign currency block trades contain sufficient safeguards to ensure that the procedures cannot be misapplied in order to achieve otherwise impermissible goals. Specifically, the floor broker must quote the market before announcing the existence of a block order; and, moreover, the broker must actually hold an order ticket for a block order. Moreover, under the PHLX proposal, any bid or bid offer for the account of an Exchange member which relies on the exemption under section 11(a)(1)(G) of the Act must yield priority to any bid or offer for the account of a customer.

The Exchange believes that the proposed rule change is consistent with the Act, and, in particular, section 6(b)(5) in that it is designed to remove impediments to and perfect the mechanism of a free and open market.

B. Self-Regulatory Organization's Statement on Burden on Competition

The PHLX does not believe that the proposed rule change will impose any inappropriate burden on competition.

[1] The PHLX originally submitted its proposal on May 9, 1991. On April 21, 1992, the PHLX amended its proposal to clarify that any bid/offer for the account of a member which relies on the exemption under Section 11(a)(1)(G) of the Act must yield priority to any bid/offer for the account of a customer. See letter from Gerald D. O'Connell, Vice President, Market Surveillance, PHLX, to Thomas Gira, Branch Chief, Options Regulation, Division of Market Regulation, SEC, dated April 21, 1992.

C. Self-Regulatory Organization's Statement on Comments on the Proposed Rule Change Received From Members, Participants, or Others

No written comments were either solicited or received.

III. Date of Effectiveness of the Proposed Rule Change and Timing for Commission Action

Within 35 days of the date of publication of this notice in the **Federal Register** or within such longer period (i) as the Commission may designate up to 90 days of such date if it finds such longer period to be appropriate and publishes its reasons for so finding or (ii) as to which the self-regulatory organization consents, the Commission will:

(a) By order approve such proposed rule change, or

(b) Institute proceedings to determine whether the proposed rule change should be disapproved.

IV. Solicitation of Comments

Interested persons are invited to submit written data, views and arguments concerning the foregoing. Persons making written submissions should file six copies thereof with the Secretary, Securities and Exchange Commission, 450 Fifth Street, NW., Washington, DC 20549. Copies of the submission, all subsequent amendments, all written statements with respect to the proposed rule change that are filed with the Commission, and all written communications relating to the proposed rule change between the Commission and any person, other than those that may be withheld from the public in accordance with the provisions of 5 U.S.C. 552, will be available for inspection and copying in the Commission's Public Reference Section, 450 Fifth Street, NW., Washington, DC. Copies of such filing will also be available for inspection and copying at the principal office of the above-mentioned self-regulatory organization. All submissions should refer to the file number in the caption above and should be submitted by September 29, 1992.

For the Commission, by the Division of Market Regulation, pursuant to delegated authority.[2]

Jonathan G. Katz,

Secretary.

Exhibit A—Rule 1016—Block Transactions In Foreign Currency Options

(a) A member may request the trading crowd to give an indication as to where a large sized order may be executed. A response from the crowd to any such request may include large sized indications of interest at prices outside the existing best bid and offer, but no trade may be consummated at the outside price until the previously established superior bids or offers (as the case may be) are either satisfied or withdrawn and a new market is established within which the large sized order may trade.

(b) The following is an exception to the prohibition against trading outside the best bid and offer; it applies to block orders executed at a clean-up price in accordance with the steps below:

(i) For the purposes of this rule, the following definitions apply:

(A) A "block order" is any Exchange foreign currency options order of 1,000 contracts or more.

(B) A "block quote" is the best bid and offer at which the block order can be entirely satisfied.

(C) The "clean-up price" is the price at which the block order is executed.

(D) The "clean-up" includes those bid or offers as the case may be of eligible interests at the clean-up price or better.

(E) An "Eligible interest" includes the following:

(1) orders placed on the book or held by a broker in the crowd at any price within the clean-up range;

(2) bids/offers within the clean-up range which constituted markets in the crowd in response to the floor broker's request for the current market and prior to his request for a block quote;

(3) bids/offers within the clean-up range made in response to the request for a block quote.

(ii) A floor broker in possession of a block order shall inquire as to the current market, inform the crowd as to the size of the block order and ask the crowd to provide a block quote;

(iii) The crowd shall then respond with bids and offers (whether agency and/or principal), at prices which may be equal, superior or inferior to the current market, which for that moment are exclusive to that block order. From these responses the floor broker shall derive the block quote and immediately determine the priority of eligible interests established within the clean-up range;

(iv) The floor broker may execute the block order at the clean-up price by announcing the trade along with the price and size of the trade.

(c) With respect to determining the priority of eligible interests within the clean-up range, the following shall apply:

(i) Priority among eligible interests is afforded as follows:

(A) First, to customer orders, as defined by Exchange Rule 1014(g) of less than 100 contracts at any price within the clean-up range.

(B) Second, to all eligible interests constituting the best market in the crowd in response to the floor broker's request for the current market and prior to his request for a block quote.

(C) Third, to all interests of 1,000 contracts or more at any price better than the clean-up price made in response to the request for a block quote.

(D) Fourth, to all eligible interests of 200 contracts or more at any price within the clean-up range made in response to the request for a block quote.

(E) Fifth, to any remaining eligible interests.

(F) Notwithstanding the above, any bid/offer for the account of a member which relies on the exemption under section 11 (a) (1) (G) of the Securities Exchange Act of 1934 must yield time priority to any bid/offer for the account of a customer.

(ii) In any instance where the question of priority arises in connection with orders within the same category (i.e., the first, second, third, fourth, or fifth), priority is established in accordance with Exchange Rule 1014(g) and Rule 119.

[FR Doc. 92-21528 Filed 9-4-92; 8:45 am]
BILLING CODE 8010-01-M

[2] 17 CFR 200.30-3(a)(12) (1989).

[Rel. No. IC-18920; 812-7920]

Dean Witter American Value Fund, et al.; Application

September 1, 1992.

AGENCY: Securities and Exchange Commission ("SEC").

ACTION: Notice of application for exemption under the Investment Company Act of 1940 (the "Act").

APPLICANTS: Dean Witter American Value Fund, Dean Witter California Tax-Free Income Fund, Dean Witter Convertible Securities Trust, Dean Witter Developing Growth Securities Trust, Dean Witter Dividend Growth Securities, Inc., Dean Witter Government Securities Plus, Dean Witter High Yield Securities Inc., Dean

Witter Intermediate Income Securities, Dean Witter Managed Assets Trust, Dean Witter Natural Resource Development Securities Inc., Dean Witter New York Tax-Free Income Fund, Dean Witter Strategist Fund, Dean Witter Tax-Exempt Securities Trust, Dean Witter Utilities Fund, Dean Witter World Wide Investment Trust, Dean Witter Value-Added Market Series, Active Assets Money Trust, Active Assets Tax-Free Trust, Active Assets Government Securities Trust, Dean Witter/Sears New York Municipal Money Market Trust, Dean Witter Capital Growth Securities, Dean Witter European Growth Fund Inc., Dean Witter Global Short-Term Income Fund Inc., Dean Witter Precious Metals and Minerals Trust, Dean Witter Pacific Growth Fund Inc., Dean Witter Multi-State Municipal Series Trust, Dean Witter Premier Income Trust, Dean Witter Short-Term U.S. Treasury Trust, Dean Witter Equity Income Trust, Dean Witter Diversified Income Trust, Dean Witter/Sears California Tax-Free Daily Income Trust, Dean Witter/Sears Liquid Asset Fund Inc., Dean Witter/Sears Tax-Free Daily Income Trust, Dean Witter/Sears U.S. Government Money Market Trust (the "DWR Funds"), TCW/DW Core Equity Trust, TCW/DW North American Government Bond Trust, and TCW/DW Latin American Fund, (collectively, with the DWR Funds, the "Funds"), and Dean Witter Reynolds Inc. ("DWR").

RELEVANT ACT SECTIONS: Exemption requested under section 6(c) from the provisions of sections 2(a)(32), 2(a)(35), 22(c), and 22(d), and rule 22c–1.

SUMMARY OF APPLICATION: Applicants seek an order amending certain contingent deferred sales charge ("CDSC") orders (the "Prior Orders") to extend the relief granted by the Prior Orders to certain additional funds, investment advisers, and principal underwriters, to permit the Funds to implement an interfund reinvestment program, and to waive the CDSC in connection with certain redemptions.

FILING DATE: The application was filed on May 13, 1992 and amended on August 7, 1992.

HEARING OR NOTIFICATION OF HEARING: An order granting the application will be issued unless the SEC orders a hearing. Interested persons may request a hearing by writing to the SEC's Secretary and serving applicants with a copy of the request, personally or by mail. Hearing requests should be received by the SEC by 5:30 p.m. on September 28, 1992, and should be accompanied by proof of service on applicants, in the form of an affidavit or, for lawyers, a certificate of service. Hearing requests should state the nature of the writer's interest, the reason for the request, and the issues contested. Persons who wish to be notified of a hearing may request notification by writing to the SEC's Secretary.

ADDRESSES: Secretary, SEC, 450 Fifth Street, NW., Washington, DC 20549. Applicants, Two World Trade Center, New York, New York 10048.

FOR FURTHER INFORMATION CONTACT: Marc Duffy, Staff Attorney, (202) 272–2511, or C. David Messman, Branch Chief, (202) 272–3018 (Office of Investment Company Regulation).

SUPPLEMENTARY INFORMATION: The following is a summary of the application. The complete application may be obtained for a fee at the SEC's Public Reference Branch.

Applicants' Representations

1. The Funds are registered under the Act as open-end management investment companies. DWR is a registered broker-dealer and, through its InterCapital Division, provides administrative, advisory, and distribution services to the Funds. DWR also is an investment adviser registered under the Investment Advisers Act of 1940.

2. In 1983, the SEC issued an order, and an amended order thereto (the "Prior Orders"), to the DWR Funds to permit certain of the DWR funds (the "CDSC Funds") to impose a contingent deferred sales charge ("CDSC") on redemptions of shares and to waive the CDSC in certain circumstances.[1] Pursuant to the Prior Orders, a CDSC generally is imposed on shares redeemed within six years of purchase. The rate of the applicable CDSC declines over time, based upon the period an investor holds shares of the CDSC Funds. The CDSC also is waived under certain circumstances.

3. The Prior Orders granted relief to the DWR Funds and any open-end management investment company for which DWR now or in the future serves as investment adviser or principal underwriter. Pursuant to an internal reorganization, the investment company management activities currently engaged in by the InterCapital Division of DWR and the principal underwriting activities currently performed by DWR will be "spun off" into two separate newly-formed corporations. Subsequent to the reorganization, the investment adviser and/or principal underwriter of the Funds will no longer be DWR but rather corporations under common control with DWR. The Prior Orders do not apply to companies controlling, controlled by, or under common control with, DWR. Therefore, applicants seek an order amending the Prior Orders to extend the relief granted by the Prior Orders to (a) the named applicants, (b) any open-end management investment company for which any person controlling, controlled by, or under common control with DWR within the meaning of section 2(a)(9) of the Act may in the future serve as an investment adviser or principal underwriter, and (c) any person controlling, controlled by, or under common control with DWR within the meaning of section 2(a)(9) of the Act (a "DWR Entity") that may in the future serve as investment adviser or principal underwriter to the Funds.

4. Applicants also seek relief to waive the CDSC in connection with an interfund reinvestment program. Under the Prior Orders, shares of each CDSC Fund that are acquired through the reinvestment of dividends, capital gains, or other distributions (collectively, "Distributions") paid by such Fund ("Reinvestment Shares") are treated as "free shares." As free shares, Reinvestment Shares are not subject to any CDSC at the time of their redemption or exchange and, subject to the conditions generally applicable to exchanges of shares, may be exchanged to purchase shares of any other CDSC Fund without imposition of a CDSC upon exchange or at the time such shares of the other CDSC Fund are redeemed. Exchanges of Reinvestment Shares are made available pursuant to offers of exchange made by the Funds (the "exchange Program"). Exchanges are made in reliance upon and in conformity with applicable requirements of section 11(a) of the Act and rule 11a-3 thereunder. In all cases, shares are exchanged on a "no-load" basis at the relative net asset values per share of the two Funds involved.

5. Under current arrangements, Distributions paid by one Fund cannot be invested directly in shares of any other Fund. Distributions may be invested only in Reinvestment Shares of the Fund that paid the Distributions. The Reinvestment Shares so acquired, however, can be exchanged for shares of other Funds pursuant to the Exchange Program, assuming an exchanging privilege between the two Funds involved is available.

6. To make available a more convenient and efficient means to invest Distributions paid by one Fund in shares

[1] Investment Company Act Release Nos. 13072 (Mar. 4, 1983) (notice), and 13126 (Mar. 30, 1983) (order); and Investment Company Act Release Nos. 13627 (Nov. 14, 1983) (notice), and 13673 (Dec. 4, 1983) (order).

of another Fund, applicants propose to implement an interfund reinvestment program (the "Reinvestment Program"). Under the Reinvestment Program, Distributions declared by a Fund could, at the option and direction of a shareholder, automatically be invested in shares of another Fund. Although all Funds could potentially participate in the Reinvestment Program, applicants anticipate that, at least initially, only certain Funds will participate and applicants will limit the availability of the Reinvestment Program to allow Distributions to be invested only in a Fund in which a shareholder already owns shares. In all cases, the investment of Distributions pursuant to the Reinvestment Program will be affected at the then-current net asset value per share of the Fund whose shares are being acquired, without being subject to any front-end sales charge at the time of purchase or any CDSC at the time of redemption or exchange. Accordingly, the Funds will waive the CDSC on shares of any CDSC Fund acquired pursuant to the Reinvestment Program.

7. Additionally, applicants propose to waive the CDSC with respect to redemptions of shares of the Funds held by: (a) Employees and former employees of DWR or any DWR Entity, (b) employee benefit plans in which such employees or former employees are participants, and (c) directors/trustees of the Funds (collectively, the "Employee Redemptions"). DWR, or any DWR Entity will determine whether, and the extent to which, these waivers are implemented, subject to the approval of the board of directors/trustees of each Fund adopting such waiver, including a majority of the directors/trustees of each Fund who are not "interested persons" of the Fund, DWR, or any DWR Entity, as such term is defined in section 2(a)(19) of the Act, as being in the best interests of the Fund and its shareholders.

Applicants' Legal Analysis

1. The requested amendment of the Prior Orders is necessary and appropriate in the public interest and consistent with the protection of investors and purposes fairly intended by the policies and provisions of the Act. The amount, computation and timing of the CDSC are designed to promote fair treatment of all shareholders, while permitting applicants to offer investors the advantage of having purchase payments fully invested on their behalf immediately. The waivers of the CDSC will not harm the Funds or their shareholders, nor will such waivers unfairly discriminate among shareholders or purchasers. Moreover, the Funds will disclose fully all available waivers of the CDSC.

2. The proposed waiver of the CDSC in connection with both the Reinvestment Program and Employees Redemptions does not raise legal issues with respect to sections 2(a)(32), 2(a)(35), 22(c) of the Act, or rule 22c–1 thereunder. Applicants recognize, however, that waiving the CDSC in such circumstances could be viewed as causing such shares to be sold at other than a uniform offering price in violation of section 22(d). Nevertheless, applicants believe that the proposed additional types of waivers are consistent with the policies underlying section 22(d) of the Act.

3. The Reinvestment Program will provide shareholders of the Funds an efficient mechanism to reinvest Distributions in the manner they believe most appropriate given their individual investment goals and financial needs. With respect to Employee Redemptions, the redeeming shareholder will redeem shares sold at little or no expense to DWR or any DWR Entity. Shareholders of the Funds will benefit from such arrangements to the extent that economies of scale may result from such sales (e.g., certain expenses will be borne *pro rata* across a larger base of shares or be subject to reductions at higher asset levels) ultimately reducing on a per share basis the expenses borne by all shareholders.

Applicants' Conditions

As a condition of the requested relief, applicants agree to comply with the provisions of proposed rule 6c-10 under the Act (Investment Company Act Release No. 16619 (Nov. 2, 1988)) as such rule is currently proposed and as it may be reproposed, adopted, or amended.

For the SEC, by the Division of Investment Management, pursuant to delegated authority.

Jonathan G. Katz,

Secretary.

[FR Doc. 92–21529 Filed 9–4–92; 8:45 am]

BILLING CODE 8010–01–M

[Rel. No. IC–18921; 812–7722]

John Hancock Asset Allocation Fund, et al.; Application

September 1, 1992.

AGENCY: Securities and Exchange Commission ("SEC").

ACTION: Notice of application for exemption under the Investment Company Act of 1940 ("Act").

APPLICANTS: John Hancock Asset Allocation Fund, John Hancock Cash Management Fund, John Hancock Global Fund, John Hancock Government Spectrum Fund, John Hancock Growth Fund, John Hancock Sovereign Bond Fund, John Hancock Sovereign Investors Fund, Inc., John Hancock Strategic Series, John Hancock Special Equities Fund, John Hancock Tax Exempt Income Fund, John Hancock Tax Exempt Series Fund, John Hancock Technology Series, Inc., John Hancock U.S. Government Securities Fund, and John Hancock World Fund (the "Hancock Funds"), Freedom Investment Trust, Freedom Investment Trust II, and Freedom Investment Trust III (the "Freedom Funds"), and any existing or future series thereof, and any open-end registered investment company, including any series thereof, not currently advised by the Adviser (as defined below), but for which the Adviser may serve in the future as investment adviser, or future open-end registered investment companies or series thereof that are of the same "group of investment companies as that term is defined in rule 11a–3 under the Act (the "Funds"), John Hancock Advisers, Inc. (the "Adviser"); and John Hancock Broker Distribution Services, Inc. ("Broker Services") and Freedom Distributors Corporation, ("Freedom Distributors") (together, the "Co-Distributors").

RELEVANT ACT SECTIONS: Order requested under section 6(c) for exemptions for sections 18(f)(1), 18(g), 18(i), 2(a)(32), 2(a)(35), 22(c), and 22(d) of the Act and rule 22c–1 thereunder.

SUMMARY OF APPLICATION: Applicants seek order to permit the Funds (a) to issue and sell three classes of shares representing interests in the same portfolios of securities, and (b) to assess a contingent deferred sales charge ("CDSC") on certain redemptions of the shares of one of the classes, and to waive the CDSC in certain cases.

FILING DATES: The application was filed on May 10, 1991, and amended on October 22, 1991, March 26, 1992, August 5, 1992, and August 31, 1992.

HEARING OR NOTIFICATION OF HEARING: An order granting the application will be issued unless the SEC orders a hearing. Interested persons may request a hearing by writing to the SEC's Secretary and serving applicants with a copy of the request, personally or by mail. Hearing requests should be received by the SEC by 5:30 p.m. on September 28, 1992 and should be accompanied by proof of service on applicants, in the form of an affidavit or,

for lawyers, a certificate of service. Hearing requests should state the nature of the writer's interest, the reason for the request, and the issues contested. Persons who wish to be notified of a hearing may request notification by writing to the SEC's Secretary.

ADDRESSES: Secretary, SEC, 450 Fifth Street, NW., Washington, DC 20549. Applicants, 101 Huntington Avenue, Boston, Massachusetts 02199–7603.

FOR FURTHER INFORMATION CONTACT: James E. Anderson, Law Clerk, at (202) 272–7027, or C. David Messman, Branch Chief, at (202) 272–3018 (Division of Investment Management, Office of Investment Company Regulation).

SUPPLEMENTARY INFORMATION: The following is a summary of the application. The complete application is available for a fee from the SEC's Public Reference Branch.

Applicant's Representations

1. All of the Funds are Massachusetts business trusts, except John Hancock Sovereign Investors Fund, Inc. ("Sovereign Investors") and John Hancock Technology Series, Inc., which are Maryland corporations. The Funds are registered under the Act as open-end management investment companies. The Adviser provides investment advisory and management services to the Funds. Broker Services acts as principal underwriter for the Hancock Funds. The Co-Distributors act as principal underwriters for the Freedom Funds.

2. All shares of the Hancock Funds, except John Hancock Cash Management Fund ("Cash Management Fund"), are currently offered to the public daily at their net asset value with the imposition of a front-end sales load. Investors may qualify for a reduced sales load based on the aggregate amount of current and prior investments in shares of the Hancock Funds which carry a sales load. Pursuant to an order of the SEC, the Funds may impose a CDSC on certain redemption of shares sold pursuant to a complete front-end sales load waiver applicable to large purchases.[1]

3. Currently, most Hancock Funds have adopted a distribution plan pursuant to rule 12b–1 under the Act. Each Hancock Fund with a rule 12b–1 plan pays Broker Services a monthly distribution fee equal to the lesser of the annual rate of 0.50% of average daily net asset value of the distribution expenses estimated to be incurred by Broker Services in any year, except Cash Management Fund (for which fund the fee has been waived since 1983) and Sovereign Investors (which pays Broker Services the lesser of 0.25% of the average daily net asset value of the distribution expenses estimated to be incurred by Broker Services in any year). Pursuant to the rule 12b–1 plans, at least quarterly, Broker Services provides the Directors/Trustees of the Funds with a written report of the amounts expended under the plan and the purpose for which such expenditures were made.

4. Shares of the Freedom Funds are purchased at a price equal to the net asset value per share, plus a sales charge which, at the investor's election, may be imposed either (a) at the time of purchase ("Class A Shares"), or (b) on a contingent deferred basis ("Class B shares").[2] Class A shares (except Freedom Money Market Fund Class A shares, as discussed below) of the Freedom Funds are subject to an ongoing distribution fee at an annual rate of up to 0.25% of each Freedom Funds' average daily net assets attributable to Class A shares. Class B Freedom Fund shares are subject to an ongoing distribution fee of up to 0.75% of each Freedom Fund's average daily net assets attributable to Class B shares.[3]

5. Freedom Money Market Fund offers two classes of shares without imposition of a sales charge: Class A shares ("Money Market Class A shares") and Class B shares ("Money Market Class B shares"). Money Market Class A shares are not subject to any ongoing distribution fees. Money Market Class B shares are subject to a distribution fee of 0.75% of average daily net assets. Shares of Freedom Money Market Fund outstanding prior to January 2, 1992 are designated Money Market Class C shares, and are not subject to any sales charge or distribution fee. Money Market Class C shares are no longer offered for purchase.

6. Applicants proposed to establish a three-part distribution plan (the "Multi-Class Plan") to enable each Fund to offer investors the options to purchase shares either with a front-end sales load and rule 12b–1 distribution and service fees (except for certain shares to be purchased in large amounts and subject to a CDSC) (the "Front End Option"), or shares subject to a CDSC, a rule 12b–1 service fee, and a higher rule 12–1 distribution fee (the "CDSC Option"). A third option available only to eligible institutional investors will allow shares to be sold without any rule 12b–1 distribution plan, CDSC, or front-end sales load (the "No-Load Option"). The Directors/Trustees will make appropriate amendments to each Hancock Funds's articles of incorporation or declaration of trust to authorize issuance of multiple classes of shares. Such amendments will be approved by the existing shareholders of the Hancock Funds. The Directors/Trustees of the Freedom Funds will approve the Freedom Funds' participation in the Multi-Class Plan.

7. The Multi-Class Plan will be implemented by designating the currently issued and outstanding shares of each Hancock Fund, except Cash Management Fund (as further explained below), as Class A shares and creating two additional new classes of shares of each Hancock Fund: Class B shares and Class C shares. Current Freedom Fund investors will continue to hold their designated class shares upon implementation of the Multi-Class Plan. Class A shares will be offered for sale subject to the Front-End Option. Class B shares will be offered subject to the CDSC Option. Class C shares will be offered pursuant to the No-Load Option. Shares of Cash Management Fund and Freedom Money Market Fund will not pay sales charges after implementation of the Multi-Class Plan.

8. To integrate Cash Management Fund into the Multi-Class Plan, Cash Management Fund will create Class A Cash Management shares, Class B Cash Management shares, and Class C Cash Management shares. Existing Shares of Cash Management Fund will be designated as Class A Cash Management shares. Class A Management shares will not be subject to a front-end sales charge, but will be charged a rule 12b–1 distribution fee of up to 0.25%, and a service fee of up to 0.25%, of the average daily net asset value of the Class A Cash Management shares. Such shares may be purchased with initial investments into the Cash Management Fund or upon exchange of Class A shares of another Fund (as described below). Class B Cash Management shares will not be subject to a front-end or deferred sales charge, but will be charged a rule 12b-1 distribution fee of up to 0.75%, and a service fee of up to 0.25%, of the average

[1] Investment Company Act Release Nos. 18331 (Sept. 20, 1991) (notice), and 18368 (Oct. 16, 1991) (order).

[2] Although up to three separate classes of shares of the Freedom Funds may be offered to the public pursuant to any order of the Commission (the "Freedom Order"), Investment Company Act Release Nos. 18378 (Oct. 24, 1992) (notice) and 18411 (Nov. 20, 1991) (order), the Adviser has determined that for efficiency in administration, separate classes of shares of the Freedom Funds will be offered to the public pursuant to the order sought in this application, and subject to the representations and conditions made in this application.

[3] The Freedom Order permits the issuance of a third class of shares ("Class C shares"), but to date no Freedom Fund Class C shares have been issued.

daily net asset value of the Class B Cash Management shares. Such shares may be acquired only in exchange for Class B shares of another Fund (as described below).[4] Class C shares offered by Cash Management Fund will be the same as Class C shares of the other Funds.

9. Under the Front-End Option, Class A shares will be sold at net asset value plus a front-end sales load. The sales load generally will be reduced for larger purchases. For purchases of Class A shares in amounts of one million dollars or more, there will be no initial sales load, but a CDSC will be imposed on redemptions of these shares made within the first twelve months after purchase (the "CDSC Class A shares"). The CDSC amount will be 1.0% on purchases of $1,000,000 to $4,999,999, 0.50% on purchases of $5,000,000 to $9,999,999, and 0.25% on purchases over $10,000,000.

10. Class A shares will be subject to rule 12b–1 distribution plans (the "Class A Plans"). Each Hancock Fund will adopt a new Class A Plan under which Class A shares will be subject to a distribution fee of up to 0.25%, and a service fee of up to 0.25% of the average daily net asset value of the Class A shares. The Freedom Funds' existing Class A Plans, under which Class A shares pay an ongoing distribution fee at an annual rate of up to 0.25% of each Freedom Fund's aggregate average daily net assets attributable to Class A shares, will remain in effect.

11. Under the CDSC Option, Class B shares will be sold at net asset value per share without the imposition of a sales load at the time of purchase. An investor's proceeds from a redemption of Class B Shares made within a specified period (which could range from one to six years) after purchase generally will be subject to a CDSC payable to the Co-Distributors. The CDSC would typically range from 1% to 4% (but could be higher or lower) on shares redeemed during the first year after purchase and would typically be reduced at a rate of either 1.00%, 0.50%, or 0.0% per year over the applicable CDSC period so that redemptions of shares held after the period will not be subject to a CDSC. If an investor reinvests in any of the Funds within 120 days of a redemption of Class B shares, any CDSC paid upon redemption will be reinstated to the investor's account by the Co-Distributors and the reinvested shares will continue to be subject to the applicable CDSC. The reinvestment will be in Class B shares of the chosen Fund without imposition of a sales charge.

12. Class B shares will be subject to rule 12b–1 distribution plans (the "Class B Plans"). Each Hancock Fund will adopt a new Class B plan under which the Class B shares will be subject to a distribution fee of up to 0.75%, and a service fee of up to 0.25%, of the average daily new asset value of the Class B Shares. The Freedom Funds' existing Class B Plans under which Class B shares pay an ongoing distribution fee at an annual rate of up to 0.75% of each Freedom Fund's aggregate average daily net assets attributable to Class B shares, will remain in effect.

13. Class C shares will not be subject to any sales load or rule 12b–1 plan fees. No Money Market Class C shares will be offered to prospective investors. Class C shares will be offered only to the following six categories of investors: (a) Unaffiliated benefit plans: (b) tax-exempt retirement plans of the Adviser and its affiliates, including the retirement plans of the Adviser's affiliated brokers; (c) unit investment trusts ("UITs") sponsored by Broker Services, and Freedom Principal Return Trust, a UIT sponsored by two indirect wholly owned subsidiaries of John Hancock Mutual Life Insurance Company; (d) banks and insurance companies purchasing for their own account; (e) investment companies not affiliated with the Adviser; and (f) endowment funds of non-profit organizations.

14. The unaffiliated benefit plans in category (a) will have several common features. Among these features are total assets in excess of $10 million or such other amounts as the Funds may establish, a separate trustee for the plan who is vested with investment discretion as to plan assets, certain limitations on the ability of plan beneficiaries to access their plan investments without incurring adverse tax consequences, and such other characteristics as the Funds may establish. Applicants will exclude self-directed plans from this category.

15. Offerees of the tax-exempt retirement plans in category (b) will be qualified defined contribution plans maintained pursuant to section 401(a) of the Internal Revenue Code by the Adviser and its affiliates for the benefit of employees, under which the assets are held in trust by a trustee and employees have limited preretirement access to the assets.

16. The UITs in category (c) will, under current regulations, require a separate order of exemption pursuant to section 6(c) of the Act in order to invest in shares of the Funds. In addition, the UITs will invest in fixed pools of securities, which will include Class C shares of the funds but would also include other securities.

17. The entities included in categories (d), (e), and (f) will not be affiliated with the Adviser. These offerees will have in common the essential features of substantial assets under management and investment decision-making by institutional management on behalf of the entity with respect to the purchase of Class C shares of the Funds. Banks and insurance companies typically employ professional staff to manage the investment of cash assets, and portfolio managers make investment decisions on behalf of investment companies. Likewise, an endowment fund of a non-profit organization is professionally managed and individual donors to such endowment funds exercise no investment discretion on behalf of the endowment fund, nor would such an individual donor consider a direct investment in shares of a Fund as an investment alternative in lieu of a donation. Thus, no possibility exists that an individual investor would be able to use these entities as a conduit for individual investing in Class C shares.

18. Several characteristics substantially distinguish the direct types of ownership interests of individuals in Class A or Class B shares, and indirect type of ownership interests of individuals in Class C shares. Individuals purchasing Class A or Class B shares are the direct owners of such securities and normally possess investment and voting power with respect thereto. On the other hand, an entity purchasing Class C shares, and not any individual beneficiaries, would be the direct owner of such shares. Except for self-directed retirement plans affiliated with the Adviser, the trustee of the plan, the depositor of the UIT or the institutional manager of trustee would possess the investment and voting power with respect to the Fund shares. The ultimate plan beneficiary, UIT shareholder, or beneficiary in any of the other categories of eligible investors would hold no direct interest in Class C shares of a Fund, and except for self-directed retirement plans affiliated with the Adviser, would not be involved in the decision to purchase, sell, or vote such shares. Decisions to invest in Class C shares will be made only by an institutional manager or trustee. Class C shares will not be offered to the same types of investors to whom Class A and Class B shares will be offered. In

[4] References to Class A shares and Class B shares in this notice are intended to include Class A Cash Management shares and Class B Cash Management shares, except to the extent these two classes of Cash Management shares differ from those two classes of the other Funds as described in this paragraph.

addition, applicants' compliance procedures require that any investor eligible to purchase Class C shares be directed into that class by the securities dealer.

19. Because shares of each class will be marketed to different types of investors, the method of soliciting sales of such shares will vary. A separate prospectus will be used to offer Class C shares and will be tailored to the needs of institutional investors regarding purchase procedures and cost information. Distribution fees received by the Co-Distributors under the Class A or Class B Plans will not be used to finance the distribution of Class C shares. The expenses of any sales literature prepared for Class C shares will be borne exclusively by the Adviser or paid from the assets of the Co-Distributors not directly or indirectly attributable to the Class A or Class B Plans ("Independent Assets"). The expenses incurred in the preparation, printing, and distribution of shareholder reports used in distributing Class C shares will be paid by the Adviser or the Co-Distributors from Independent Assets. Compensation for selling the Class C shares and servicing the accounts of Class C shareholders, other than customary transfer agency fees paid to the Fund's transfer agent, will be paid solely from the Adviser's resources or the Independent Assets of the Co-Distributors.

20. All items of income and expense of a Fund will be allocated among the three classes of shares of that Fund on a *pro rata* basis of the relative aggregate net asset value of the three classes except: (a) The expenses of the Class A Plan and the Class B Plan; (b) any higher transfer agency costs; and (c) any incremental expenses properly attributable to one class which the SEC shall approve by an amended order. Because of the higher ongoing distribution fees paid by the holders of Class B shares, the net income attributable to and the dividends payable on Class B shares will be lower than the net income attributable to and the dividends payable on either Class A shares or Class C shares. Because Class C shareholders pay no distribution expenses, the net income attributable to and dividends paid on Class C shares will be higher than for either Class A or Class B shares. Dividends and other distributions paid to each class of shares of a Fund will, however, be declared on the same days and at the same times and will be determined in the same manner.

21. At present, shares of each Fund may be exchanged, either in whole or in part, at net asset value for shares of any other Fund. Upon implementation of the Multi-Class Plan, Class A shares of a Fund will be exchangeable only for Class A shares of other Funds, Class B shares will be exchangeable only for Class B shares, and Class C shares will be exchangeable only for Class C shares. Class B shareholders and Class A shareholders subject to a CDSC and who exchange for Class B Cash Management shares and Class A Cash Management shares, respectively, will be subject to any applicable CDSC upon redemption of such Cash Management Fund shares to the extent permitted by rule 11a–3 under the Act. A shareholder who exchanges Class A Cash Management shares for Class A shares of any other Fund (and subject to a sales load) is subject to that charge at the time of the exchange, unless the Class A Cash Management shares were acquired in an exchange for shares of another Fund, and a sales charge was previously paid in the purchase of such other Fund's shares. A shareholder who exchanges Class B Cash Management shares for Class B shares of any other Fund will be subject to any applicable CDSC upon redemption of those acquired Class B shares to the extent permitted by rule 11a–3 under the Act.

22. Applicants seek an exemption from the provisions of sections 2(a)(32), 2(a)(35), 22(c), 22(d), and rule 22c–1 under the Act to permit the Funds to assess a CDSC on redemptions of Class B shares and to permit the Funds to waive the CDSC for certain types of redemptions. The amount of the CDSC will be calculated as the lesser of the amount that represents a specified percentage of the net asset value of the shares at the time of purchase, or that represents the same or lower percentage of the net asset value of the shares at the time of redemption.

23. No CDSC will be imposed on shares purchased more than a specified period prior to redemption. No CDSC will be imposed on shares derived from the reinvestment of distributions. In determining whether any CDSC is applicable, it will be assumed that a redemption is made, first, of shares derived from reinvestment of distributions or amounts which represent an increase in the value of the shareholder's account resulting from capital appreciation, second, of shares purchased prior to the CDSC period, and third, of shares purchased during the CDSC period. In determining the rate of any applicable CDSC, it will be assumed that a redemption is made of Class B shares or CDSC Class A shares of a Fund held by the investor for the longest period of time within the CDSC period.

24. The funds are requesting authority to waive the CDSC for Class B shares and are authorized to waive the CDSC for CDSC Class A shares: (a) On redemptions following the death or disability, as defined in section 72(m)(7) of the Internal Revenue Code of 1986, as amended (the "Internal Revenue Code"), of a shareholder if redemption is made within one year of death or disability of a shareholder; (b) in connection with distributions from retirement plans that are not subject to any penalties in accordance with the provisions of section 72(t) under the Internal Revenue Code; (c) in whole or in part, in connection with shares sold to (i) Directors/Trustees or officers of the Funds, directors or officers of the Adviser, the Distributor and their affiliates or selected broker-dealers, (ii) bona fide, full time employees or sales representatives of any of the foregoing, (iii) retired employees, officers, or Directors/Trustees of the foregoing, or (iv) any trust, pension, profit sharing or other benefit plan for persons described above; (d) in whole or in part, in connection with shares sold to any state, county, or city, or any instrumentality, department, authority or agency thereof, which is prohibited by applicable investment laws from paying a sales load or commission in connection with the purchase of shares of any registered investment management company; (e) pursuant to each Fund's right to liquidate or involuntarily redeem shares in a shareholder's account; (f) pursuant to a systematic withdrawal plan; and (g) in connection with the redemption of shares of any Fund that is combined with another Fund, investment company or personal holding company by virtue of a merger, acquisition or other similar reorganization transaction. If the Funds waive or reduce the CDSC, such waiver or reduction will be uniformly applied to all shares in the specified category.

25. If the Directors/Trustees of a Fund, which has been waiving or reducing its CDSC decide to suspend or discontinue such waivers or reductions, the disclosure in the Fund's prospectus will be appropriately revised. Any Class B shares or CDSC Class A shares purchased prior to the termination of such waiver or reduction would be entitled to a waiver or reduction of the CDSC as provided in a Fund's prospectus at the time of purchase of such shares.

Applicants' Legal Analysis

1. Applicants request an order exempting them from the provisions of sections 18(f)(1), 18(g), and 18(i) of the Act to the extent that the proposed issuance and sale of Class A, Class B, and Class C shares representing interests in the Funds might be deemed: (a) to result in a "senior security" within the meaning of section 18(g); and (b) to violate the equal voting provisions of section 18(i).

2. Applicants believe that the proposed Multi-Class Plan would permit them to tailor their marketing and distribution activities to a broader segment of the capital markets than is currently possible. Applicants would be able to maintain the sales activities and services currently provided to smaller individual customers and simultaneously expand their marketing and sale activities to attract substantial institutional investors who may purchase large amounts of the Funds' shares. The Funds' current and prospective individual customers would continue to enjoy not only the benefits of the services provided by the Funds, but also the potential improved investment performance resulting from the Funds' ability to invest in larger blocks of portfolio securities. Moreover, to the extent that the adoption of the Multi-Class Plan increases sales of Fund shares, owners of all classes of shares may be relieved of a portion of the fixed costs normally incurred by mutual funds.

3. The proposed allocation of expenses and voting rights relating to the Class A Plan and the Class B Plan in the manner described is equitable and would not discriminate against any group of shareholders. Investors purchasing shares offered in connection with the Class A and Class B Plans and receiving services provided under those plans would bear costs associated with such services. They would also enjoy exclusive shareholder voting rights with respect to matters affecting the Class A Plan or the Class B Plan.

4. Applicants believe that the proposed Multi-Class Plan does not create the potential for the abuses that section 18 of the Act was designed to redress. The Multi-Class Plan will not increase the speculative character of the shares of the Fund. The Multi-Class Plan does not involve borrowing, nor will it affect the Funds' existing assets or reserves, and does not involve a complex capital structure. Nothing in the Multi-Class Plan suggests that it will facilitate control by holders of any class of shares.

5. Applicants submit that the requested exemption to permit the Funds to implement the proposed Class B CDSC arrangement is appropriate in the public interest, consistent with the protection of investors, and consistent with the purposes fairly intended by the policy and provisions of the Act. The proposed CDSC arrangement will provide shareholders the option of having their full payment invested for them at the time of their purchase of shares of the Funds with no deduction of a sales charge.

Applicants' Conditions

Applicants agree that any order of the Commission granting the requested relief shall be subject to the following conditions:

1. The Class A shares, Class B shares, and Class C shares will represent interests in the same portfolio of investments of a Fund, and be identical in all respects except as set forth below. The only differences among Class A shares, Class B shares, and Class C shares of the same Fund will relate solely to: (a) the distribution fees charged to Class A and Class B shares under the Class A and Class B Plans will only be applied to the distribution expenses attributable to the sale of such class of shares; (b) Class B shares would pay higher distribution fees under the Class B Plans than would Class A shares under the Class A Plans or shares of Class C (which has no rule 12b–1 plan); (c) Class A shares would pay higher distribution fees under the Class A Plans than would Class C shares because Class C has no rule 12b–1 plan; (d) each class would pay any other incremental expense subsequently identified that should be properly allocated only to that class and which is approved by the SEC pursuant to an amended order; (e) the out-of-pocket cost to purchase shares paid by an investor would differ depending on which class of shares was purchased by the investor; (f) shareholders of Class A and Class B would have exclusive voting rights with respect to the Class A and Class B Plans applicable to their respective classes of shares; (g) Class A, Class B and Class C shares may bear different expenses relating to the cost of holding shareholder meetings necessitated by the exclusive voting rights among the classes; (h) Class C shares would have no voting rights with respect to the Class A Plan or Class B Plan; (i) the three classes would have different exchange privileges; (j) transfer agency costs would differ in amount among the classes based on any difference in relative net assets of the classes (but would be the same percentage of each class's net asset value), and by virtue of an incremental per account charge would be higher for Class B than Class A or Class C; and (k) the designation of the three classes of shares would be different.

2. The Directors/Trustees of the Funds, including a majority of the non-interested Directors/Trustees, will approve the Multi-Class Plan. The minutes of the meetings of the Directors/Trustees of the Funds regarding the deliberations of the Directors/Trustees concerning, and their approval of, the Multi-Class Plan will reflect in detail the reasons for the Directors/Trustees' determination that the proposed Multi-Class Plan is in the best interests of both the Funds and their respective shareholders.

3. On an ongoing basis, the Directors/Trustees of the Funds, pursuant to their fiduciary responsibilities under the Act and otherwise, will monitor each Fund for the existence of any material conflicts among the interests of the classes of shares. The Directors/Trustees, including a majority of the non-interested Directors/Trustees, will take such action as is reasonably necessary to eliminate any such conflicts that may develop. The Adviser and the Co-Distributors will be responsible for reporting any potential or existing conflicts to the Directors/Trustees. If a conflict arises, the Adviser or the Co-Distributors, each at its own cost, will remedy such conflict up to and including establishing a new registered management investment company.

4. Any rule 12b–1 plan adopted or amended which permits the assessment of a distribution fee or service fee on any class of shares which has not had its rule 12b–1 plan approved by public shareholders of that class will be submitted to the public shareholders of that class for approval at the next meeting of shareholders of that class for approval at the next meeting of shareholders after the initial issuance of such shares. If still required by the Commission, such meeting will be held within sixteen months of the date that the registration statement relating to such class first becomes effective or, if applicable, the date that the amendment to the registration statement necessary to offer such class first becomes effective.

5. The Directors/Trustees of the Funds will receive quarterly and annual statements concerning distribution expenditures complying with paragraph (b)(3)(ii) of rule 12b–1, as amended from time to time. In these statements, only distribution expenditures properly attributable to the sale of a particular

class of shares will be used to justify the rule 12b–1 fees charged to the shareholders of such class of shares. Expenditures not related to the sale of a specific class of shares will not be presented to the Directors/Trustees to justify any rule 12b–1 fees charged to such class of shares. These statements, including the allocations upon which they are based, will be subject to the review and approval of the non-interested Directors/Trustees in the exercise of their fiduciary duties.

6. Dividends paid by a Fund with respect to its Class A, Class B, and Class C shares, to the extent any dividends are paid, will be calculated in the same manner, at the same time, on the same day and will be paid in the same amount, except that distribution fee payments made under the rule 12b–1 plans relating to Class A and Class B shares will be borne exclusively by those classes (Class C and shares are not subject to a rule 12b–1 plan) and any incremental transfer agency costs relating to Class B shares will be borne exclusively by Class B.

7. The methodology and procedures for calculating the net asset value and dividends and distributors of the three classes of shares and the proper allocation of expenses among the three classes have been reviewed by an expert (the "Expert"). The Expert has rendered a report to the applicants filed with amendment No. 1 to the application and an amended report filed with amendment No. 2 to the application, that such methodology and procedures are adequate to ensure that such calculations and allocations will be made in an appropriate manner. On an ongoing basis, the Expert, or an appropriate substitute Expert, will monitor the manner in which the calculations and allocations are being made and, based upon such review, will render at least annually a report to the Funds that the calculations and allocations are being made properly. The reports of the Expert shall be filed as part of the periodic reports filed with the SEC pursuant to sections 30(a) and 30(b)(1) of the Act. The work papers of the Expert with respect to such reports, following a request by the Fund (which the Funds agree to provide), will be available for inspection by the SEC's staff upon the written request for such work papers by a senior member of the Division of Investment Management or of a Regional Office of the SEC limited to the Director, an Associate Director, the Chief Accountant, the Chief Financial Analyst, an Assistant Director, and any Regional Administrators or Associate and Assistant Administrators. The initial report of the Expert is a "Special Purpose" report on the "Design of a System" and the ongoing reports will be "Special Purpose" reports on the "Design of a System and Certain Compliance Tests" as defined and described in SAS No. 44 of the American Institute of Certified Public Accountants (the "AICPA"), as it may be amended from time to time, or in similar auditing standards as may be adopted by the AICPA from time to time.

8. Applicants have adequate facilities in place to ensure implementation of the methodology and procedures for calculating the new asset value and dividends and distributions of the three classes of shares and the proper allocation of expenses among the three classes of shares and this representation has been concurred with by the Expert in the initial report referred to in condition (7) above and will be concurred with by the Expert, or an appropriate substitute Expert, on an ongoing basis at least annually in the ongoing reports referred to in condition (7) above. Applicants agree to take immediate corrective action if this representation is not concurred in by the Expert or appropriate substitute Expert.

9. The prospectuses of the applicants will include a statement to the effect that any person entitled to receive compensation for selling Fund shares may receive different compensation with respect to sales of Class A shares, Class B shares or Class C shares.

10. The Co-Distributors will adopt compliance standards as to when Class A shares, Class B shares and Class C shares may appropriately be sold to particular investors. Applicant's compliance standards will require all investors eligible to purchase Class C shares of a Fund offering such shares to invest in Class C, rather than Class A or Class B, shares of such Fund. Applicants will require all persons selling shares of the Funds to conform to such standards.

11. The conditions pursuant to which the exemptive order is granted and the duties and responsibilities of the Directors/Trustees of the Fund with respect to the Multi-Class Plan will be set forth in guidelines which will be furnished to the Directors/Trustees as part of the materials setting forth the duties and responsibilities of the Directors/Trustees.

12. Each Fund will disclose in each of its prospectuses the respective expenses, performance data, distribution arrangements, services, fees, initial sales loads, CDSCs and exchange privileges applicable to each class of shares offered through such prospectus. Class A and Class B shares will be offered and sold through a single prospectus. Class C shares of a Fund will be offered solely pursuant to a separate prospectus and the prospectus for the Class A and Class B shares of that Fund will disclose the existence of the Class C shares of the Funds and will identify the entities eligible to purchase such shares, and the Class C prospectus will disclose the existence of the Fund's Class A and Class B shares. Each Fund will disclose the respective expenses and performance data of each class of shares in every shareholder report. The shareholder reports will contain, in the statement of assets and liabilities and statement of operations, information related to the Fund as a whole generally and not on a per class basis. Each Fund's per share data, however, will be prepared on a per class basis with respect to all classes of shares of such Fund. To the extent any advertisement or sales literature describes the expenses or performance data applicable to Class A or Class B shares, it will disclose the expenses and/or performance data applicable to both classes of shares. Advertising materials reflecting the expenses or performance data for Class C shares will be available only to institutional investors eligible to invest in Class C shares. The information provided by the applicants for publication in any newspaper or similar listing of a Fund's net asset value and public offering price will separately present this information for Class A and Class B shares.

13. Applicants acknowledge that the grant of the exemptive order requested by the application will not imply SEC approval, authorization or acquiescence in any particular level of payments that the Funds may make pursuant to the rule 12b–1 plans in reliance on the exemptive order.

14. The relief requested from the provisions of sections 2(a)(32), 2(a)(35), 22(c), and 22(d) of the Act shall be subject to the applicants' compliance with the provisions of proposed rule 6c–10 under the Act, IC–16619 (November 2, 1988), as such rule is currently proposed and as it may be reproposed, adopted or amended.

For the SEC, by the Division of Investment Management, pursuant to delegated authority.

Jonathan G. Katz,

Secretary.

[FR Doc. 92–21530 Filed 9–4–92; 8:45 am]

BILLING CODE 8010–01–M

DEPARTMENT OF TRANSPORTATION

Office of the Secretary

[(Order 92-9-4); Docket 41958]

Reissuance of Certificate of Bering Air, Inc.

AGENCY: Department of Transportation.

ACTION: Notice of order to show cause.

SUMMARY: The Department of Transportation is directing all interested persons to show cause why it should not reissue a certificate of public convenience and necessity to Bering Air, Inc., authorizing it to engage in interstate and overseas air transportation of persons, property, and mail, subject to a new condition prohibiting operations with aircraft having more than 30 passenger seats or a 7,500-pound payload capacity until the company has been found fit to do so.

DATES: Persons wishing to file objections should do so no later than September 16, 1992.

ADDRESSES: Objections and answers to objections should be filed in Docket 41958 and addressed to the Documentary Services Division (C-55, room 4107), U.S. Department of Transportation, 400 Seventh Street, SW., Washington, DC 20590, and should be served upon the parties listed in Attachment A to the order.

FOR FURTHER INFORMATION CONTACT: Mr. James Lawyer, Air Carrier Fitness Division (P-56, room 6401), U.S. Department of Transportation, 400 Seventh Street, SW., Washington, DC 20590, (202) 366-1064.

Dated: September 1, 1992.

Patrick V. Murphy,

Deputy Assistant Secretary for Policy and Program Development.

[FR Doc. 92-21544 Filed 9-4-92; 8:45 am]

BILLING CODE 4910-62-M

Federal Railroad Administration

Petition for Exemption or Waiver of Compliance

In accordance with 49 CFR 211.9 and 211.41, notice is hereby given that the Federal Railroad Administration (FRA) has received from the Kansas City Southern Railway Company a request for exemptions from or waivers of compliance with a requirement of Federal rail safety standards. The petition is described below, including the regulatory provisions involved, and the nature of the relief being requested.

The Kansas City Southern Railway Company

[Waiver Petition Docket Number PB-92-1]

The Kansas City Southern Railway Company (KCS) is seeking a waiver of compliance from § 232.13 of the Railroad Power Brakes and Drawbars Regulations, 49 CFR part 232. KCS is requesting that requirements for a transfer train air brake test be waived to expedite the movement of an empty unit coal train to clear public rail crossings. The 110 car train is assembled at the Kansas City Power and Light Company's Hawthorne Plant after unloading. Section 232.13(e)(1) requires that a transfer train air brake test consisting of charging the train to not less than 60 pounds, making a 15 pound brake pipe reduction and inspecting each car to determine that brakes are applied. This procedure takes approximately 1½ to 1¾ hours during which time the plant entrances and two rail lines are blocked. When completed, the coupled cut of empty cars extends from the end of the Hawthorne Plant siding to Air Line Junction, a distance of over one mile. The front end of the train at Air Line Junction is less than 50 yards from the entrance to the joint facility. After the transfer train air brake test, the train proceeds into the KCS/Soo Line Railroad joint facility where an initial terminal air brake test is performed and the Burlington Northern Railroad then operates the train.

KCS seeks to eliminate the transfer train air brake test and proceed directly to the joint facility at ten miles per hour or less. This movement would require ten to fifteen minutes. The railroad states the movement is on a slight upgrade and the train can be controlled with the locomotive independent brake. The train blocks all crossings in the distance traveled. The two plants involved, Miles, Inc., Agriculture Division Chemical Plant and the Kansas City Water and Pollution Control Department, support the petition stating the blocked crossings interfere with worker access and emergency vehicle access. Both plants use and store hazardous materials.

Interested parties are invited to participate in these proceedings by submitting written views, data, or comments. FRA does not anticipate scheduling a public hearing in connection with these proceedings since the facts do not appear to warrant a hearing. If any interested party desires an opportunity for oral comment, they should notify FRA, in writing, before the end of the comment period and specify the basis for their request.

All communications concerning these proceedings should identify the appropriate docket number (e.g., Waiver Petition Docket Number PB-92-1) and must be submitted in triplicate to the Docket Clerk, Office of the Chief Counsel, Federal Railroad Administration, Nassif Building, 400 Seventh Street, SW., Washington, DC 20590. Communications received before final action is taken. Comments received after that date will be considered as far as practicable. All written communications concerning these proceedings are available for examination during regular business hours (9 a.m.-5 p.m.) in room 8201, Nassif Building, 400 Seventh Street, SW., Washington, DC 20590.

Issued in Washington, DC on September 2, 1992.

Phil Olekszyk,

Deputy Associate Administrator for Safety.

[FR Doc. 92-21535 Filed 9-4-92; 8:45 am]

BILLING CODE 4910-06-M

DEPARTMENT OF THE TREASURY

Internal Revenue Service

Performance Review Board

AGENCY: Internal Revenue Service, Treasury.

ACTION: Notice of members of senior executive service performance review board.

EFFECTIVE DATE: Performance Review Board effective September 1, 1992.

FOR FURTHER INFORMATION CONTACT: DiAnn Kiebler, HR:H:E, room 3515, 1111 Constitution Avenue, N.W., Washington, DC. 20224, Telephone No. (202) 622-6320, (not a toll free number).

SUPPLEMENTARY INFORMATION: Pursuant to section 4324(c)(4) of the Civil Service Reform Act of 1978, the members of the Internal Revenue Service's Senior Executive Service Performance Review Board for senior executives other than Assistant Commissioners, Regional Commissioners and senior executives in Inspection and the Office of the Commissioner are as follows:.

Michael Dolan, Deputy Commissioner, Chairperson
Charles Brennan, Regional Commissioner, Mid-Atlantic
Walter Hutton, Assistant Commissioner (Information Systems Management)
Leon Moore, Regional Commissioner, Central
Inar Morics, Assistant Commissioner (Criminal Investigation)
Judy Van Alfen, Assistant Commissioner (Returns Processing)
Helen White, Assistant to the Commissioner (Equal Opportunity)

This document does not meet the criteria for significant regulations set forth in paragraph 8 of the Treasury Directive appearing in the **Federal Register** for Wednesday, November 8, 1978 (43FR52122).

Shirley D. Peterson,

Commissioner.

[FR Doc. 92–21557 Filed 9–4–92; 8:45 am]

BILLING CODE 4830–01–M

Performance Review Board

AGENCY: Internal Revenue Service, Treasury.

ACTION: Notice of members of senior executive service performance review board.

EFFECTIVE DATE: Performance Review Board effective September 1, 1992.

FOR FURTHER INFORMATION CONTACT: DiAnn Kiebler, HR:H:E, Room 3515, 1111 Constitution Avenue, NW., Washington, DC 20224, Telephone No. (202) 622–6320, (not a toll free number).

SUPPLEMENTARY INFORMATION: Pursuant to section 4314(c)(4) of the Civil Service Reform Act of 1978, the members of the Internal Revenue Service's Senior Executive Service Performance Review Board for Assistant Commissioners, Regional Commissioners and senior executives in the Office of the Commissioner are as follows: .

Philip Brand, Chief Financial Officer
David Jordon, Deputy Chief Counsel
Richard Mihelcic, Associate Chief Counsel (Finance and Management)
Henry Philcox, Chief Information Officer

This document does not meet the criteria for significant regulations set forth in paragraph 8 of the Treasury Directive appearing in the **Federal Register** for Wednesday, November 8, 1978 (43FR52122).

Shirley D. Peterson,

Commissioner.

[FR Doc. 92–21556 Filed 9–4–92; 8:45 am]

BILLING CODE 4830–01–M

Performance Review Board

AGENCY: Internal Revenue Service, Treasury.

ACTION: Notice of Members of Senior Executive Service Performance Review Board.

EFFECTIVE DATE: Performance Review Board effective September 1, 1992.

FOR FURTHER INFORMATION CONTACT: DiAnn Kiebler, HR:H:E, Room 3515, 1111 Constitution Avenue, NW., Washington, DC 20224, Telephone No. (202) 622–6320, (not a toll free number).

SUPPLEMENTARY INFORMATION: Pursuant to section 4314(c)(4) of the Civil Service Reform Act of 1978, the members of the Internal Revenue Service's Senior Executive Service Performance Review Board for senior executives in the Office or the Chief Inspector are as follows:

Michael Dolan, Deputy Commissioner
Donald Kirkendall, Inspector General, Department of the Treasury
Helen White, Assistant to the Commissioner (Equal Opportunity)

This document does not meet the criteria for significant regulations set forth in paragraph 8 of the Treasury Directive appearing in the **Federal Register** for Wednesday, November 8, 1978 (43 FR 52122).

Shirley D. Peterson,

Commissioner.

[FR Doc. 92–21555 Filed 9–4–92; 8:45 am]

BILLING CODE 4830–01–M

Performance Review Board

AGENCY: Internal Revenue Service, Treasury.

ACTION: Notice of Members of Senior Executive Service Performance Review Board.

EFFECTIVE DATE: Performance Review Board effective September 1, 1992.

FOR FURTHER INFORMATION CONTACT: DiAnn Kiebler, HR:H:E, room 3515, 1111 Constitution Avenue, NW., Washington, DC 20224, Telephone No. (202) 622–6320, (not a toll free number).

SUPPLEMENTARY INFORMATION: Pursuant to section 4314(c)(4) of the Civil Service Reform Act of 1978, the members of the Internal Revenue Service's Senior Executive Service Performance Review Board for senior executives in the Appeals organization are as follows:

David Blattner, Chief Operations Officer;
Philip Brand, Chief Financial Officer;
Henry Philcox, Chief Information Officer

This document does not meet the criteria for significant regulations set forth in paragraph 8 of the Treasury Directive appearing in the **Federal Register** for Wednesday, November 8, 1978 (43 FR 52122).

Shirley D. Peterson,

Commissioner.

[FR Doc. 92–21554 Filed 9–4–92; 8:45 am]

BILLING CODE 4830–01–M

Sunshine Act Meetings

Federal Register
Vol. 57, No. 174
Tuesday, September 8, 1992

This section of the FEDERAL REGISTER contains notices of meetings published under the "Government in the Sunshine Act" (Pub. L. 94-409) 5 U.S.C. 552b(e)(3).

FARM CREDIT ADMINISTRATION

Farm Credit Administration Board; Regular Meeting

AGENCY: Farm Credit Administration.

SUMMARY: Notice is hereby given, pursuant to the Government in the Sunshine Act (5 U.S.C. 552b(e)(3)), of the forthcoming regular meeting of the Farm Credit Administration Board (Board).

DATE AND TIME: The regular meeting of the Board will be held at the offices of the Farm Credit Administration in McLean, Virginia, on September 10, 1992, from 10:00 a.m. until such time as the Board may conclude its business.

FOR FURTHER INFORMATION CONTACT: Curtis M. Anderson, Secretary to the Farm Credit Administration Board, (703) 883–4003, TDD (703) 883–4444.

ADDRESS: Farm Credit Administration, 1501 Farm Credit Drive, McLean, Virginia 22102–5090.

SUPPLEMENTARY INFORMATION: Parts of this meeting of the Board will be open to the public (limited space available), and parts of this meeting will be closed to the public. The matters to be considered at the meeting are:

Open Session

A. *Approval of Minutes*
B. *New Business*
1. *Noncorporate Prior Approvals*
a. National Bank for Cooperatives—Financial Risk Management for Customers
b. National Bank for Cooperatives—Lending Limits
2. *Regulations*
a. Assessment and Apportionment of Administrative Expenses (Proposed)
b. Personnel Administration; Referral of Crimes and Suspected Crimes (Proposed)
c. Organization; Director Compensation (Final)
d. Personnel Administration; Human Resources Policies, Retirement Plans (Final)
3. *Other*
a. Farm Credit System (FCS) Building Association

Closed Session *

A. *New Business*
1. Enforcement Actions.

Dated: September 3, 1992.

Curtis M. Anderson,

Secretary, Farm Credit Administration Board.

[FR Doc. 92–21682 Filed 9–3–92; 3:35 pm]

BILLING CODE 6705–01–M

* Session closed to the public—exempt pursuant to 5 U.S.C. 552b(c) (8) and (9).

FEDERAL RETIREMENT THRIFT INVESTMENT BOARD

TIME AND DATE: 1:00 p.m., September 21, 1992.

PLACE: 5th floor, Conference Room, 805 Fifteenth Street, NW., Washington, DC.

STATUS: Open.

MATTERS TO BE CONSIDERED:

1. Budget presentation by Clyde McShan, Director, National Finance Center.
2. Approval of the minutes of the August 17, 1992, Board meeting.
3. Thrift savings Plan activity report by the Executive Director.
4. Review of the FY 1993–1994 budgets.
5. Status of action on audit recommendations.
6. Review of KPMG Peat Marwick audit reports:

"Pension and Welfare Benefits Administration Review of the Thrift Savings Plan Forfeiture and Forfeiture Restoration Operations at the United States Department of Agriculture, Office of Finance and Management, National Finance Center."

"Pension and Welfare Benefits Administration Review of Access Controls and Security Over Thrift Savings Plan Computerized Resources at the United States Department of Agriculture, Office of Finance and Management, National Finance Center."

CONTACT PERSON FOR MORE INFORMATION: Tom Trabucco, Director, Office of External Affairs, (202) 523–5660.

Dated: September 1, 1992.

Francis X. Cavanaugh,

Executive Director Federal Retirement Thrift Investment Board.

[FR Doc. 92–21590 Filed 9–3–92; 11:06 am]

BILLING CODE 6760–01–M

FEDERAL RESERVE SYSTEM BOARD OF GOVERNORS

TIME AND DATE: 10:30 a.m., Thursday, September 10, 1992.

PLACE: Marriner S. Eccles Federal Reserve Board Building, C Street entrance between 20th and 21st Streets, NW., Washington, DC. 20551.

STATUS: Open.

MATTERS TO BE CONSIDERED:

1. Proposal to adopt Regulation DD (Truth in Savings) to implement the Trust in Savings Act. (Proposed earlier for public comment; Docket No. R–0753)
2. Any items carried forward from a previously announced meeting.

Note: This meeting will be recorded for the benefit of those unable to attend. Cassettes will be available for listening in the Board's Freedom of Information Office, and copies may be ordered for $5 per cassette by calling (202) 452–3684 or by writing to: Freedom of Information Office, Board of Governors of the Federal Reserve System, Washington, D.C. 20551.

CONTACT PERSON FOR MORE INFORMATION: Mr. Joseph R. Coyne, Assistant to the Board; (202) 452–3204.

Dated: September 3, 1992.

Jennifer J. Johnson,

Associate Secretary of the Board.

[FR Doc. 92–21643 Filed 9–3–92; 12:03 pm]

BILLING CODE 6210–01–M

FEDERAL RESERVE SYSTEM BOARD OF GOVERNORS

TIME AND DATE: Approximately 11:00 a.m., Thursday, September 10, 1992, following a recess at the conclusion of the open meeting.

PLACE: Marriner S. Eccles Federal Reserve Board Building, C Street entrance between 20th and 21st Streets, NW., Washington, DC 20551.

STATUS: Closed.

MATTERS TO BE CONSIDERED:

1. Personnel actions (appointments, promotions, assignments, reassignments, and salary actions) involving individual Federal Reserve System employees.
2. Any items carried forward from a previously announced meeting.

CONTACT PERSON FOR MORE INFORMATION: Mr. Joseph R. Coyne, Assistant to the Board; (202) 452–3204. You may call (202) 452–3207, beginning at approximately 5 p.m. two business days before this meeting, for a recorded announcement of bank and bank holding company applications scheduled for the meeting.

Dated: September 3, 1992.

Jennifer J. Johnson,

Associate Secretary of the Board.

[FR Doc. 92–21644 Filed 9–3–92; 12:03 pm]

BILLING CODE 6210–01–M

LEGAL SERVICES CORPORATION BOARD OF DIRECTORS

Audit and Appropriations Committee Meeting; Notice

TIME AND DATE: A meeting of the Board of Directors Audit and Appropriations Committee will be held on September 14, 1992. The meeting will commence at 10:00 a.m.

PLACE: The Legal Services Corporation, 750 1st Street NE., The Board Room, 11th Floor, Washington, DC 20002, (202) 336–8896.

STATUS OF MEETING: Open.

MATTERS TO BE CONSIDERED:

1. Approval of Agenda.
2. Approval of Minutes of August 9, 1992 Meeting.
3. Consideration and Review of Proposed Fiscal Year 1993 Consolidated Operating Budget.

CONTACT PERSON FOR INFORMATION: Patricia Batie (202) 336–8896.

Date issued: September 3, 1992.

Patricia D. Batie,

Corporate Secretary.

[FR Doc. 92–21589 Filed 9–3–92; 11:05 am]

BILLING CODE 7050–01–M

Corrections

Federal Register
Vol. 57, No. 174
Tuesday, September 8, 1992

This section of the FEDERAL REGISTER contains editorial corrections of previously published Presidential, Rule, Proposed Rule, and Notice documents. These corrections are prepared by the Office of the Federal Register. Agency prepared corrections are issued as signed documents and appear in the appropriate document categories elsewhere in the issue.

DEPARTMENT OF HEALTH AND HUMAN SERVICES

Food and Drug Administration

21 CFR Part 310

[Docket No. 91N-0505]

RIN 0905-AA06

Status of Certain Additional Over-the-Counter Drug Category II and III Active Ingredients

Correction

In proposed rule document 92-20209 beginning on page 39568 in the issue of Tuesday, August 25, 1992 make the following corrections:

1. On page 39569, in the table, in the first column, in entry (4), insert ", and" between "Antipyretic" and "Antirheumatic".

2. On page 38570, in the second column, in the table, under entry (2)(i), the ANPRM and NPRM for "Candicidin" now reading "III" should read "II".

§ 310.545 [Corrected]

3. On page 38574, in the 1st column, in § 310.545(a)(10)(vii), in the 15th line, "Pyrilamine maleateSalicylamide" should have appeared as two separate entries.

BILLING CODE 1505-01-D

DEPARTMENT OF VETERANS AFFAIRS

38 CFR Part 3

RIN 2900-AF60

Burial of Unclaimed Bodies

Correction

In rule document 92-15285 appearing on page 29025 in the issue of Tuesday, June 30, 1992, make the following corrections:

§ 3.1610 [Corrected]

1. On page 29025, in the second column, in § 3.1610:

a. In the introductory text, in the second line, "permissible" was misspelled.

b. In paragraph (b), in the third line from the bottom, "cemetery" was misspelled, and insert "at" after "or,".

BILLING CODE 1505-01-D

federal register

Tuesday
September 8, 1992

Part II

Department of Transportation

Federal Highway Administration

49 CFR Parts 350, 355, and 396
Motor Carrier Safety Assistance Program; Final Rule

DEPARTMENT OF TRANSPORTATION

Federal Highway Administration

49 CFR Parts 350, 355, and 396

[FHWA Docket Nos. MC-91-7, MC-91-15, and MC-92-17]

RIN 2125-AC90

Motor Carrier Safety Assistance Program

AGENCY: Federal Highway Administration (FHWA), DOT.

ACTION: Final rule.

SUMMARY: This final rule implements revisions to the Motor Carrier Safety Assistance Program (MCSAP) which was reauthorized through FY 1997 in the Intermodal Surface Transportation Efficiency Act of 1991. The MCSAP provides financial assistance to States to enforce the Federal Motor Carrier Safety and Hazardous Materials Regulations or compatible State regulations pertaining to commercial motor vehicle safety. The reauthorizing legislation contained a number of provisions which must be incorporated into the program before fiscal year 1993. The program for FY 1992 remained substantially unchanged, and the existing regulations at 49 CFR part 350 continued to govern. The revisions made herein will shape the program for the following five fiscal years.

This final rule also incorporates into part 350 a requirement from the Motor Carrier Safety Act of 1990 that violations found during inspections funded under MCSAP be corrected and that States participating in the MCSAP adopt a verification program to ensure that commercial motor vehicles and operators thereof found in violation of safety requirements have subsequently been brought into compliance. Finally, a new part 355 is added which will implement the recommendations of the Commercial Motor Vehicle Safety Regulatory Review Panel intended to carry out the objectives of the Motor Carrier Safety Act of 1984 with respect to achieving the benefits of uniform enforcement of consistent commercial motor vehicle safety regulations nationwide.

These latter two objectives conclude rulemaking actions that had been initiated under Dockets No. MC-91-7 [RIN 2125-AC11] and No. MC-91-15 [RIN 2125-AC-76], which were closed on April 16, 1992 and incorporated into this Docket.

EFFECTIVE DATE: October 8, 1992.

FOR FURTHER INFORMATION CONTACT: Ms. Susan Petty, Office of Motor Carrier Safety Field Operations, (202) 366-9579, or Mr. Paul L. Brennan, Office of the Chief Counsel, (202) 366-0834, Federal Highway Administration, 400 Seventh Street, SW., Washington, DC 20590. Office hours are from 7:45 a.m. to 4:15 p.m., e.t., Monday through Friday, except legal holidays.

SUPPLEMENTARY INFORMATION: On April 16, 1992, a notice of proposed rulemaking was published in the **Federal Register** (57 FR 13572) to solicit comments on proposed revisions to the Motor Carrier Safety Assistance Program (MCSAP), first authorized in the Surface Transportation Assistance Act of 1982 (STAA) (secs. 401-404, Pub. L. 97-424, 96 Stat. 2097, 2154 (49 U.S.C. app. § 2301 *et seq.*)), and reauthorized in the Commercial Motor Vehicle Safety Act of 1986 (sec. 12014, Pub. L. 99-570, 100 Stat. 3207, 3207-186). The original authorization contained certain conditions States would have to meet to be eligible for financial assistance and established funding levels beginning at $10 million for FY 1984 and increasing by $10 million each year until the maximum of $50 million was reached in the final year of FY 1988. Subsequent legislation increased the funding levels to $60 million per year in FY's 1989 through 1991.

The Motor Carrier Safety Act of 1984 (MCSA of 1984) (49 U.S.C. app. § 2501 *et seq.*) created a Commercial Motor Vehicle Safety Regulatory Review Panel (Safety Panel) to assist the Secretary in the review of existing State laws and regulations affecting commercial motor vehicle safety to determine their consistency with the Federal regulations. The Safety Panel accomplished its mission with the publication of its report, "Achieving Compatibility of State and Federal Safety Requirements," in August 1990. The report recommended that the FHWA establish procedures for the continual review and analysis of the compatibility of State safety laws and regulations with the Federal requirements. The 1984 Act also authorized the Secretary to preempt State laws and regulations affecting commercial motor vehicle safety which were found to be inconsistent with Federal laws and regulations.

New Legislation

The Intermodal Surface Transportation Efficiency Act of 1991 (ISTEA) (Pub. L. 102-240, 105 Stat. 1914) was signed into law on December 18, 1991. Title IV of that Act is the Motor Carrier Act of 1991 (MCA of 1991), section 4002 of which reauthorizes MCSAP at gradually increasing funding levels through FY 1997. The new legislation adds several conditions for eligibility for participation in MCSAP; provides MCSAP funds to encourage the States to include certain related enforcement activities in their enforcement programs; and changes the maintenance of effort requirement.

The new legislation also allows for in-kind contributions by States to be counted toward their matching shares; increases the availability of allocated funds for expenditure by the State to the year of allocation plus one year; specifically authorizes discretionary reallocation of unobligated funds; provides for an administrative takedown of up to 1.25 percent, and earmarks 75 percent of that takedown for non-Federal training; and requires minimum funding levels for certain specified programs. Finally, the MCA of 1991 mandates the development within six months of an "improved" formula and process for allocation of the funds, and within nine months, the issuance of regulations specifying "guidelines and standards for ensuring compatibility of intrastate commercial motor vehicle safety laws and regulations with the Federal motor carrier safety regulations."

This final rule (1) accommodates all of the revisions to the MCSAP required by the 1991 legislation; (2) incorporates the requirements of the Motor Carrier Safety Act of 1990 (MCSA of 1990) (sec. 15, Pub. L. 101-500, 104 Stat. 1218) with respect to verification of correction of out-of-service conditions with new prescriptions in the 1991 legislation; and (3) implements the Safety Panel recommendations.

Because so much of the existing rule is being affected by the new legislation, the FHWA is publishing a revised part 350 in its entirety.

Analysis of Comments

Thirty-one State and local agencies submitted comments to the docket. In addition, eight associations, one labor union, and four individuals submitted comments. Generally, the issues raised in the comments addressed the new activities to be included in the Motor Carrier Safety Assistance Program (MCSAP), the funding and formula issues, the maintenance of effort (MOE) requirement, the verification of correction of violations identified during roadside inspections, the requirement that States adopt the Commercial Motor Vehicle Safety Alliance (CVSA) fine schedule, and compatible interstate and intrastate regulations and enforcement.

a. New Eligible Activities

Section 4002 (a) and (c) of the ISTEA specifically referred to activities, such as size and weight enforcement, drug interdiction, and traffic law enforcement, which are intended to increase the comprehensiveness and effectiveness of the MCSAP program. As proposed, §§ 350.9 and 350.13 required these new activities as conditions of MCSAP participation or to be addressed in the State Enforcement Plans (SEP). Although one State law enforcement agency agreed that newly emphasized programs should not diminish the effectiveness of the other MCSAP enforcement programs, many commenters expressed reservations about integrating these activities into existing programs. For example, the International Brotherhood of Teamsters opposed the new program activities, maintaining that they may dilute the basic commercial motor vehicle inspection program. Several State agencies had similar views, particularly when it involved the participation of other State and local agencies not currently receiving MCSAP funds.

The FHWA believes the rule, as proposed, strikes the proper balance between continued progress toward more comprehensive and integrated commercial motor vehicle safety enforcement and the current capacities of States to expand their programs. The FHWA recognizes that Congress has created obligations in the ISTEA to extend the MCSAP to more traditional enforcement activities incorporating existing safety enforcement resources at State and local levels, but the statute allows for gradual growth. In fact, there is a specific provision included to ensure that participation in the new activities will not diminish the effectiveness of the existing commercial motor vehicle safety programs. The FHWA is confident, therefore, that the States can successfully integrate these activities into their current commercial motor vehicle safety activities during the life of this reauthorization. A few State agencies, currently receiving MCSAP funds, opposed expansion of activities on the basis of lack of jurisdictional authority by the MCSAP agency to conduct such activities. The FHWA would not consider this a good reason to avoid efforts to consolidate State activities into a more integrated and effective program.

There was some support for the emphasis on enforcement of regulations concerning impaired drivers, the availability and use of roadside alcohol testing equipment, and training of personnel in the recognition of impaired drivers. On the other hand, there was considerable concern about the inclusion of a random roadside element in the drug and alcohol testing requirements. Five State agencies and two industry associations expressed opposition to such a program, citing constitutional concerns. It must be understood that FHWA is not now requiring random roadside testing as a condition of MCSAP participation, but is studying the feasibility of such a program element in the future.

Some commenters to the docket addressed the emphasis on hazardous materials enforcement. One agency supported the proposal to increase inspection of shipper facilities and loads in transportation. Two agencies (in the same State) said they had no jurisdiction over hazardous materials shippers. A fourth agency not only supported the proposal, but recommended States not having jurisdiction over shippers of hazardous materials "be placed under good faith effort" until that is achieved.

One State law enforcement agency commented that the proposed rule requires an assessment of "highway hazardous materials safety problems within the State." Not having this data, the State maintains that it would impose a hardship to provide it as a condition of SEP approval. The FHWA feels that identification of the nature of the safety problems facing a State is important to the formulation of an effective enforcement plan, and such identification has always been an integral step in the development of the SEP. Some States may need to develop data sources to allow them to plan and evaluate their enforcement activities in this area of hazardous materials. The FHWA believes that a comprehensive hazardous materials enforcement program includes not only roadside inspection of hazardous materials laden vehicles, but ultimately inspection of the cargo and the facilities at which the materials are packaged, marked, loaded and placarded. The FHWA recognizes that although jurisdictional obstacles may exist, enforcement strategies can be devised with the States to deal with shipper-related transportation problems.

Several comments were received regarding Commercial Driver's License (CDL) enforcement requirements. Although one driver expressed his opposition to the CDL, which is not the subject of this rulemaking, the comments were otherwise favorable. The FHWA believes that the positive effect of the CDL program will become increasingly apparent as States improve licensing procedures, including roadside verification of the status of the CDL. Computer equipment and other costs related to CDL verification and enforcement are eligible expenses for MCSAP funding.

One respondent, referring to size and weight, drug interdiction, and traffic law enforcement, was opposed to having these activities included in the driver/vehicle inspection to determine funding eligibility. This State enforcement agency felt this makes these activities secondary to the inspection program, and are important enough to stand alone. The FHWA agrees that these are important activities and should receive due emphasis, but only in the context of the overall driver/vehicle inspection process, which is consistent with the law and retains the fundamental focus of the Motor Carrier Safety Assistance Program.

Eight comments from law enforcement agencies were received relative to the inclusion of size and weight, drug interdiction, and traffic enforcement as eligible costs. One commenter was opposed to size and weight enforcement as being dangerous under roadside inspection conditions. Another believed that it was cost prohibitive to use motor carrier safety personnel for drug interdiction activities. Two other did not have the authority to enforce traffic law. On the other hand, one agency said it is appropriate and potentially very effective to combine these efforts into a unified program of activities. Another State recommended that drug interdiction funds be earmarked for that purpose. One State recommended expanding "seaport" to include "transportation terminal facilities," to take into account inland locations experiencing problems with intermodal containers. In each of these instances, the rule implements what was required by the ISTEA. The principal requirement is that each of these activities, to be eligible for Federal participation under MCSAP, be performed "in conjunction with an appropriate type of inspection of the commercial motor vehicle for enforcement of Federal and State commercial motor vehicle safety regulations." Section 4002(c), 49 U.S.C. app § 2302(e).

b. Enforcement by Local Agencies

Thirteen comments were received regarding the provision to promote the effective use of qualified employees of local agencies, under the direction and supervision of the lead State agency, in commercial motor vehicle enforcement activities. Support for the provision was received from two commenters, citing successful working relationships with

other agencies in the past, but eleven respondents (10 State agencies and an industry association) were opposed. Commonly cited reasons for opposition were lack of statutory authority to control local agencies, increased administrative costs, fear that inspection will become revenue-generating procedures, and overall loss of effectiveness. The FHWA does not consider the ISTEA as requiring the pass through of Federal funds to local agencies, nor the exercise of control over local agencies by the State. It does require assurances by grant recipients that they will promote the selective use of properly "trained and qualified officers" from cooperating agencies at the local level, which the FHWA believes can make a significant contribution to the States' overall commercial motor vehicle effort. Because the States' basic formula allocations are projected to increase throughout the life of the authorization, this may provide opportunities for States to train and qualify local enforcement personnel, and to use them in coordinated enforcement efforts. It may, in some appropriate cases, lead to arrangements with local agencies as subgrantees, but this is not perceived as the major thrust of this provision. On the other hand, local agency participation may be an effective means to address localized commercial motor vehicles safety problems, particularly in traffic enforcement, impaired driver detection, vehicle inspections and CDL compliance. Such participation would also increase the awareness of local enforcement agencies in more uniform compliance and enforcement. This provision would allow for the use of existing local resources in lieu of additional staff and resources at the State level in times of fiscal constraints. Because of the number of MCSAP agencies that have been successful in including local agencies in their programs, the FHWA expects that other States will be able to promote the use of local agencies in MCSAP.

The FHWA recognizes that jurisdictional relationships and sensitivities exist, but believes that the MCSAP agencies can play significant leadership roles in their States, including, for example, education, training, cooperation, coordination, and sharing of data that would foster improved commercial motor vehicle law enforcement by other State and local agencies.

C. Maintenance of Effort (MOE)

Seventeen State and local agencies commented on the Maintenance of Effort requirement. Section 4002(b) of the ISTEA amends the original maintenance of effort required in the STAA of 1982 by changing the base period for measuring the level of effort. The effect of this change has been to greatly increase the level of commercial motor vehicle safety activities that the State must maintain to participate in MCSAP. The intent of the maintenance of effort provision is to ensure that Federal funds supplement State funds and do not replace them. Further, it ensures that States commit to continuing their past efforts in commercial motor vehicle safety activities.

Fourteen of the commenting States and the CVSA are strongly opposed to this increase in the MOE for a variety of reasons, mostly related to future fiscal uncertainties, and the perceived inequities imposed on those States which substantially increased their spending in this area in recent years.

Several States suggested alternatives for the MOE requirement such as delaying implementation of the statutory requirements, self-certification by the States consistent with other grant programs, allowing temporary adjustments during the current economic hard times in a particular State. In addition, while the CVSA believes that this congressional mandate is a detriment to those States which enhanced their programs, the CVSA supports the flexibility provided to the States by the rule.

While three States supported the new calculation of the MOE as appropriate, the FHWA is aware of the burden that the requirement of the statute places on some States. The final rule has been rewritten and goes further to clarify that for purposes of determining a State's expenditures, only currently eligible activities for funding under MCSAP, by agencies participating in MCSAP, are counted.

The CVSA and the Oregon Public Utility Commission interpreted the wording in the NPRM to allow States that elected to provide in excess of the 20 percent required match are authorized to exclude those funds from the MOE calculation. The previous language in part 350 stated that "any State funds *required* as the State's share to match such Federal funds" (emphasis added) are excluded from the MOE. The NPRM used the wording from the ISTEA which stated that "any State matching funds *used* to receive Federal funding" are excluded from the MOE. The FHWA finds this interpretation interesting, but invalid. The Federal funds authorized in the MCSAP are "used to reimburse States pro rata for the Federal share (not to exceed 80 percent) of the costs incurred." Those costs have already been incurred and the Federal share reimbursed in the base years pursuant to grant agreements, which identified the matching ratios.

The Missouri Department of Public Safety recommended that a "certified assurance" would "eliminate the tedious exercise of calculating, documenting, and performing a yearly verification of the MOE." The FHWA agrees with this recommendation and will include a self-certification by the State that it is maintaining its level of expenditures for commercial motor vehicle safety activities. Section 350.13(b)(2), requiring that the State Enforcement Plan (SEP) include a calculation of the MOE, and § 350.17 will be revised accordingly. As part of the certification required under § 350.15, the State will certify its commitment to the MOE. While the calculations will not be required in advance in the annual SEP process, compliance would be subject to verification by audit similar to other grant and financial requirements.

The Ohio Public Utility Commission suggested that because the section on MOE did not specify Federal fiscal year or State fiscal year, they would prefer to use the State fiscal year. The FHWA believes that either fiscal year would meet the intent of the statute and agrees that the States should have the flexibility to consider its MOE on either the State or Federal fiscal year.

d. CVSA Recommended Fine Schedule

Section 4002(a)(4) of the ISTEA requires that the States, as part of their SEPs, ensure that fines imposed and collected by the State are reasonable and appropriate and that, to the maximum extent practicable, the State will seek to implement into law and practice the recommended fine schedule published by the CVSA.

The Owner-Operator Independent Drivers Association (OOIDA) strongly supports the maximum fine schedule as a means to ensure that motor carriers are treated fairly nationwide. Generally, other commenters support the concept of uniform fines for similar violations nationwide. However, the CVSA and fourteen State and local agencies, which commented on this requirement, opposed making compliance with the fine schedule a grant condition and withholding MCSAP funding for States that are not able to meet the schedule. The States report that they have little control or influence over the judicial process in their States and that they should not, therefore, be held accountable. The Department of Transportation for the State of New

York and the Idaho State Police were particularly adamant for on this point. The CVSA stated that its intent in obtaining the cooperation and support of Congress to achieve reasonable, appropriate, and uniform national penalty ranges was not to create "the potential of ultimately precluding some States from participating in MCSAP." The CVSA recommended that SEPs include an explanation of State actions to establish an estimated time to implement, and reasons why the schedule of fines has not been achieved. The CVSA further recommended not withholding MCSAP funding during a reasonable implementation period.

The FHWA agrees with the OOIDA, most State commenters, and the CVSA that uniform and appropriate penalty schedules for violations is a worthwhile goal. Working with the State of Utah, the FHWA has developed a Judicial Outreach Program designed to provide information to State and local judges on the importance of meaningful, effective fines for violations of commercial motor vehicle safety regulations and standards. The FHWA anticipates that this Judicial Outreach Program will soon be available for the States as one tool to use to begin working toward uniform fines. The FHWA believes that appropriate fines, high enough to be an effective deterrent to unsafe motor carriers without being draconian, are an important element of any effective commercial motor vehicle safety program. Although some MCSAP agencies may believe they have no control or influence over the fines and penalties assessed or collected in their States, the FHWA believes the statute requires a State to compare its fines and penalties with the CVSA schedule. Ideally, a national uniform schedule will emerge from these efforts. The FHWA agrees with the commenters that this is a goal that the States should work toward and that the language of the statute, i.e., "to the maximum extent practicable," provides some latitude in approximating this goal by a specific date.

Consistent with the CVSA recommendations, § 350.13 will include a new paragraph requiring the States to provide information on their current fine and penalty structures and to describe their actions and plans to achieve uniformity. This important program element will be closely monitored as part of the SEPs, and future consideration will be given toward addressing this in the Tolerance Guidelines. The FHWA will also continue its cooperative efforts with the CVSA, the States, and the industry to evaluate and improve the effectiveness of this requirement on the MCSAP.

e. Funding.

Twelve States, an association, and a labor union commented on funding and formula issues. Two States supported the formula allocations and grant structure as proposed. The other States supported the funding proposals and recommended adjustments of factors such as use of interstate road mileage only, counting all vehicle miles rather than only commercial motor vehicle miles, giving States with depressed economies additional funds, and increasing formula allocations to States that have adopted compatible regulations. The American Trucking Association (ATA) recommends that the territories receive less funding than small States, and that the formula be adjusted so that there are the same number of States at the lower minimum as at the maximum. The Teamsters recommended that the formula count only commercial motor vehicles which are covered by the State's rules so that for those States which do not include vehicles under 26,000 GVWR, the formulas would be reduced. The Maine State Police offered a similar recommendation.

The FHWA has reviewed these proposals and believes that they have merit. Some of the data elements suggested, however, are not that easily attainable or reliable. The formula factors described in the NPRM provide a good balance of relevant factors, for which reliable data is readily available. This formula has been used for a number of years, and can be readily updated for current figures. The formula allocation proposed in the NPRM would produce a distribution that is very close to current ratios, which have been found to be generally acceptable. It also allows for growth as the authorizations increase in the later years of the program.

Seven State agencies wrote in support of maintaining funding levels for certain States that were able to expand their motor carrier safety programs in the early years of MCSAP. Because of the availability of unused funds, they were able to receive secondary funding for a number of years in addition to their basic allocations. These States have developed comprehensive commercial motor vehicle safety programs. This has played an important role in demonstrating the advantages of MCSAP thereby facilitating expansion. These States have employed personnel and expanded activities in reliance on continued MCSAP funding at previous program levels. An abrupt decrease in Federal funds would create a void that could not be filled under existing State budget constraints. Although these States are not accommodated in the formula allocation, the FHWA intends to give them preference in the redistribution of other funds. These grant funds are in addition to the basic formula grant and redistributional preference will be gradually reduced over the life of the authorization.

f. Coordination of SEP

Three States, including the Governor of Idaho, and the National Association of Governor's Highway Safety Representatives (NAGHSR) asked for clarification on the nature and scope of coordination required for the SEP. Additionally, Idaho questions how the determination is made that the coordination has been achieved. The States believe that the FHWA should provide latitude in how this requirement is met. In general, States recognize the importance of coordinating the SEP with other agencies to identify overlapping programs and assure that efforts are not duplicated. They do not want to relinquish the administrative authority and control of MCSAP in the process.

The NAGHSR recommended that the State MCSAP agencies and highway safety agencies exchange information in early summer as each is developing its plans for the upcoming year. The Governor of Idaho further states that the coordination process should be a two-way street and that State highway safety planners should also coordinate their State highway safety plans with the State MCSAP agencies. The FHWA agrees with these comments, but believes the State entities are in a better position to determine how this exchange of information and coordination should be accomplished.

g. Uniform Reporting Requirements

The California Highway Patrol supports SAFETYNET and recognizes that participation by all States is important for the enforcement and monitoring of the motor carrier industry. However, it cautions that over-collection of data can become a burden on the States. Collected data must be meaningful, essential, and useful. The FHWA supports this recommendation and is interested in improving the data while lessening the paperwork and reporting burden on grantees and the industry. Two State agencies and the CVSA sought clarification of the required participation in the SAFETYNET. One State was reluctant to commit to a developing program with potentially burdensome data

requirements. Another State and the CVSA inquired whether this would require all States to conduct safety reviews and compliance reviews. Although the FHWA encourages the States to participate in all aspects of commercial motor vehicle safety programs, including safety reviews and compliance reviews, this participation is not mandatory. An example of new data requirements, which is a necessary element of SAFETYNET participation, is to upload accident data elements identified by the National Governor's Association (NGA).

The Arkansas Highway Police expressed concerns about § 350.11(i) (final rule § 350.9) on uniform reporting requirements as they may impact State privacy statutes. This will be addressed with each State as it prepares to adopt specific SAFETYNET modules, and the FHWA is confident that accommodations can be made. By January 1, 1994, all States should be performing the following related activities:

1. Electronically submitting to the Motor Carrier Management Information System (MCMIS) inspection records;
2. Electronically submitting to the MCMIS accident records of accidents involving commercial motor carriers (Accident data item definitions should adhere to the NGA standard);
3. States participating in the safety review (SR)/compliance review (CR) program activities and using MCSAP-funded laptop computers to conduct SRs and CRs must, after authorization by FHMA Division management, electronically submit SR/CR records for reviews performed on motor carriers to MCMIS (non-laptop States may continue to submit in paper form to the Division office); and
4. Records submitted electronically should be in standard SAFETYNET record format and pass standard SAFETYNET field edit checks.

The FHWA will give the States ample time to implement any other new requirements which are deemed necessary to effectively evaluate and manage the MCSAP.

h. Imminent Hazard

Two State agencies and one association commented on the proposed definition of "imminent hazard." The definition is being omitted from the final rule because the term is not otherwise used in the rule.

i. Recognition and Acceptance of Inspections

For State agencies, including the Governor of Idaho, and four associations wrote in support of the proposal that States recognize and accept inspections and stickers from participating agencies. The OOIDA also expressed support for the reciprocal recognition of the vehicle inspection and emphasizes the importance of uniformity among the various jurisdictions. The lack of uniformity places a burden on the trucking industry by requiring drivers and owner-operators to comply with criteria that could vary widely from State to State. The lack of reciprocity also burdens the industry by subjecting the same vehicle to multiple inspections.

The American Bus Association (ABA) points out that the reciprocity provision is particularly important for intercity bus operators. Passengers on a charter trip, for example, do not understand why the bus should be inspected more than once during the trip. Although the safe transportation of passengers is a prime objective of the FHWA, the rule should alleviate any unnecessary delays. The Chemical Waste Transportation Institute (CWTI) believes the States should also certify that they reciprocally recognize the Federal periodic inspections provided by other States.

The Governor of Idaho and the State of Idaho Department of Law enforcement recommended that only those officers who have been CVSA certified may issue out-of-service orders. The FHWA does not believe that this final rule is the appropriate place to address that issue. The training, qualifications and certification of State inspectors authorized to issue out-of-service orders can best be addressed by the States.

Idaho and the Washington State Patrol also add that the CVSA sticker should not be considered as evidence that the periodic inspection required under part 396 has been conducted. This provision is covered under 49 CFR 396.23 which defines the types of inspections which are considered equivalent to a periodic inspection. This issue is outside the scope of this rulemaking and is not addressed here.

j. Public Education

Two individual drivers wrote to register their support for the proposed public education efforts. The drivers stated that more needs to be done to educate car drivers and the public in general about the special operating characteristics of commercial motor vehicles. One driver points out that uninformed car drivers cause a large percentage of the commercial motor vehicle accidents. Even though commercial drivers try their best to be safety-minded, a greater impact on safety could be made if car drivers were more knowledgeable of the limitations of commercial motor vehicles. The FHWA agrees that this is an important issue and will work with the States to develop initiatives in this area.

k. Declaration of Knowledge

Three State agencies recommended deleting the requirement that owners declare knowledge of the FMCSRs at the time of registration. All three commenters believe that the requirement is burdensome, unnecessary, and that its effectiveness is questionable. Besides being a statutory requirement for which there is no discretion to delete, the FHWA believes that all registrants of commercial motor vehicles have a proprietary interest in their vehicles being operated safely. The FHWA believes that the requirement serves to emphasize the importance of the regulations and the responsibility of the carriers. The FHWA will be exploring ways of tying inspection information with registration records through the development of the Commercial Motor Vehicle Information System (CMVIS) provided by section 4003 of the ISTEA so that the State can readily determine the safety fitness of motor carriers at the time of registration.

l. Correction of Vehicle Defects

Seven State agencies and three associations submitted comments addressing the verification of out-of-service (OOS) orders. Overall, the commenters appear to be very supportive of the proposed requirements included in the NPRM. The need for a verification program is well stated in the comments submitted by the California Highway Patrol, i.e., a system of inspection and enforcement without benefit of a verification program loses its validity.

There is strong support from the States on the flexibility that the requirement offers the States. As reflected in the overall comments submitted, the insistence on a single procedure for all States or the establishment of a specific level of covert operations would most likely be perceived as a burden by the States and inappropriate or ineffective for a number of States.

The Washington State Patrol recommends, in part, that the definition be modified to also include OOS orders issued by "local officers." This is consistent with our efforts to encourage States to bring local agencies into the program, and the definition has been changed to reflect this. The Washington Utility and Transportation Commission

further asks the FHWA to "clarify the verification process in order to impress the fact that this rule is directed toward out-of-service defects—and not all defects." The MCSA of 1990 requires that the correction of both OOS violations and other violations be verified. The States should include activities that address both. For example, a State may choose to use some covert verification activities for vehicles and drivers placed out of service, and certifications on the return copy of the roadside inspection report for other violations.

The Chemical Waste Transportation Institute agrees that the requirement to return the certification of safety violation corrections to the issuing agency will help ensure that violations have, in fact, been corrected. One commenter suggests that the requirement under § 396.9 that motor carriers retain a copy of the inspection record for 12 months may be a burden. However, this requirement is consistent with other recordkeeping requirements in the FMCSRs and should not be a significant issue for carriers.

One commenter suggested that, as an alternative, an investigating officer should be able to obtain inspection data from SAFETYNET and bring it to the carrier's premises. Since intrastate data is not currently entered into SAFETYNET, the commenter suggests that inspection data on intrastate carriers should also be captured in SAFETYNET in the future so that all data would be available to the officer. It should be noted that intrastate data is, in fact, entered into the SAFETYNET; however, intrastate data is not uploaded to FHWA.

The ATA asks that carriers be given more time to return inspection reports and file a report at the terminal where the vehicle is maintained. The ATA urges that the carrier be allowed 60 days to file a copy of each roadside report. Currently, § 396.9 allows 15 days for the motor carrier to certify correction of defects found in inspections. The FHWA believes that this is sufficient time and, moreover, that these reports on safety violations found on trucks and buses operating on the highways require immediate attention and follow-up by the motor carrier.

The ATA further recommends that carriers have the option of retaining copies of the inspection forms at the principal place of business or at the point at which the vehicle is based. This is consistent with the retention requirements for all other maintenance records and is contemplated in the rule.

m. Compatibility and Tolerance Guidelines

Section 4002(1) of the ISTEA requires that the FHWA issue formal regulations specifying guidelines for ensuring compatibility of intrastate regulations. Eighteen comments were received regarding this issue. There were seven comments in favor of the Tolerance Guidelines contained in the NPRM, including four State and local agencies, and three associations. Generally, they favored uniform standards and enforcement, and withholding MCSAP funding from States whose laws are incompatible. The Commonwealth of Virginia felt the Tolerance Guidelines were "equitable," while the Hazardous Materials Advisory Council "strongly supports the FHWA's effort to ensure that uniform national standards are consistently applied and enforced." Commenters also supported the exemptions contained in the Tolerance Guidelines, including the proposed intrastate exemption for vehicles with GVWRs of less than 26,001 lbs., hours of service, and the flexibility for existing State waiver programs. The Iowa DOT expressed support for the 26,000 lbs. GVWR limit, noting that "drivers travelling in less than 26,001 vehicles and combinations do not usually travel long distances across country, nor, in our opinion, do they represent a significant safety hazard." The Oregon Public Utility Commission stated that it supports the waiver programs proposed by the FHWA, as it believes that "our driver waiver program qualifies under the proposed standard and constitutes a very real service to particular drivers without jeopardizing highway safety." While supporting the Tolerance Guidelines provision on hours of service, the Oregon Trucking Association also stated that the limited tolerance for hours of service should be extended to interstate operations as well.

Eleven commenters expressed opposition to the Tolerance Guidelines in the NPRM, including seven State agencies, the ATA, the CVSA, the Teamsters, and the Advocates for Highway and Auto Safety. The New York DOT, Tennessee PSC, and the Minnesota Department of Public Safety opposed the NPRM on the grounds that it is not sufficiently flexible. The CVSA also recommended that good faith efforts negotiated with noncompatible States be extended another three years instead of being eliminated. The FHWA believes that the limited exemptions/exceptions contained in the Tolerance Guidelines give flexibility to the States while retaining the safety benefits derived from the FMCSRs. Further, the FHWA believes it is clearly the responsibility of each State to evaluate its safety laws and regulations in comparison to the national standard.

The California Highway Patrol and the Tennessee PSC expressed concern regarding the autonomy of local jurisdictions. These parties indicated that no mechanism exists to review local law. As proposed, part 355 permits review, at least with respect to the impact of local laws and regulations on interstate commerce with preemption as the remedy, if necessary. The Maine State Police expressed concern that the Tolerance Guideline do not allow a mileage exception for intrastate motor carriers or drivers operating from a home terminal, as "very few motor carriers involved in highway transportation today do not engage in interstate commerce as part of their business." The definition of interstate commerce for purposes of the FMCSRs includes trade, traffic, or transportation across State lines or national borders. If the Tolerance Guidelines do not provide an exemption, such regulations impacting on interstate commerce would be subject to the preemption under part 355. Ideally, the States' intrastate regulations would be identical to the FMCSR, and this would negate any issue of disparate treatment. All motor carriers would be required to meet the same safety standards.

The International Brotherhood of Teamsters (IBT) supports the concept of uniformity, but believes that the proposed rule, particularly the Tolerance Guidelines, permits too much divergence in the treatment of intrastate and interstate motor carriers. This is particularly so with regard to age, hours-of-service, medical qualifications, and vehicles under 26,000 lbs. The IBT believes that "this perpetuates an environment wherein an interstate driver passing through an inspection station can be placed out of service for eight hours based on his hours of service, and an intrastate driver right behind him with more hours can pass right through." The IBT also believes that the FHWA should not preempt more stringent safety regulations as it would not result in greater protection for drivers and the public. The law and the regulations, as proposed, allow for waivers of preemption based on demonstrated public interest and consistency with safety.

The Advocates for Highway and Auto Safety (Advocates) also expressed strong opposition to "the weak requirements of the Tolerance Guidelines and the numerous wholesale

exemptions that are proposed in the draft regulations." Further, concern was expressed over the exclusion of parts 394, 398, and 399, size and weight, hours-of-service, GVWR, and medical variances, especially for insulin dependent diabetics. The Advocates believes "that the FHWA must at least require MCSAP participants to adhere to current FMCSRs." To support its position, the Advocates also submitted copies of comments it had submitted to previous rulemakings.

Tolerance Guidelines have been used for a number of years. Consistent with the ISTEA, the FHWA believes that the Tolerance Guidelines ensure the degree of uniformity necessary to assure safety and allow flexibility within which resources can be directed at the most beneficial programs. The elimination of the limited flexibility provided to the States by the exemptions and waivers that are currently in effect would frustrate States' attempts at compliance, and have a detrimental effect on the overall program.

The ATA recommended that the States' review of both interstate and intrastate regulations be published in the **Federal Register** for review and comment before accepting the SEP. The ATA believes that this would allow the motor carrier industry to examine each State's review of its laws and regulations and provide comments. The FHWA does not support this proposal because it would create unnecessary delays in the development of the SEPs.

The FHWA has provided in the final rule a process by which compatibility of State laws, regulations and enforcement practices are considered in terms of the effect on continued funding under MCSAP. Therefore, under the parallel procedures in parts 350 and 355, any individual may petition the FHWA to determine if a State requirement, whether applicable to interstate or intrastate commerce, is compatible. The FHWA believes that this provides sufficient opportunity for individuals or associations to address specific regulatory concerns.

The ATA, along with the Hazardous Materials Advisory Council, expressed concern over the language regarding variances in the hazardous materials areas, and believes that the final rule should clarify that the Research and Special Programs Administration (RSPA) will set Hazardous Materials variances, not the FHWA. The preemption provisions in Part 355 do not apply to the Hazardous Materials Regulations because that is within the province of the RSPA. The FHWA is delegated the responsibility for enforcement of the Hazardous Materials Regulations as they apply to highway transportation. As the MCSAP is primarily an enforcement program, the FHWA retains responsibility for determining the compatibility of enforcement tolerances. The final rule now makes it clear that any decision with respect to the compatibility of State laws or regulations with the Hazardous Materials Transportation Regulations requiring interpretation of the latter will be referred to the RSPA before any final determination is made regarding continued funding under the MCSAP. Additionally, the ATA believed that paragraph 3.B. of appendix C should be deleted in order to eliminate confusion over interstate versus intrastate carriage of hazardous materials. The ATA also suggested that the FHWA clarify Appendix B, part 350 to ensure that States certify as to the compatibility of both interstate and intrastate regulations, and recommended that § 355.25(a) include the date of compliance recommended by the Safety Panel (July 31, 1992). Additionally, it recommended that the reference be changed from part 389 to 386. The ATA also believes that Appendix A should clarify that States need not review laws that were not reviewed by the Safety Panel.

The compatibility portion of the regulations has been revised to eliminate any possible confusion. Section 350.9, Conditions for basic grant approval, specify that compatibility is a requirement for a basic grant. Part 389, Rulemaking Procedures, is the proper reference.

The ATA, the Advocates for Highway and Auto Safety, and the IBT expressed dissatisfaction with the provisions contained in the Tolerance Guidelines that would exempt vehicles with a GVWR of 26,000 lbs. or less, and insulin-dependent diabetics. The FHWA is currently addressing these issues in separate rulemaking proceedings. Any possible effect of those proceedings on the Tolerance Guidelines will be noted and dealt with in those proceedings.

n. Guidelines for SEP

Four State law enforcement agencies commented that the data required by appendix A, paragraphs 2(j), (k), and (l), would be very difficult and expensive to obtain. These paragraphs contain no data requirements. The purpose of this part of the Guidelines for preparation of the SEP is problem identification. By addressing these problems in the SEP, the States are led to the subsequent issue of measuring the effectiveness of their activities. Certainly, by now, the participating States are gathering data in these areas which would allow for strategic deployment of available resources. Another State requested criteria for correlating overweight violations with safety. Although this is a worthwhile goal of program management, it is not an issue to address in rulemaking. As data becomes available, the FHWA will attempt to distribute useful information as part of its oversight responsibilities. The type of weight enforcement presently authorized for MCSAP funding is at locations where overweight vehicles are most likely to be a safety problem.

Although preliminary SEPs will be submitted prior to the effective date of this rule, it must be recognized that approval of fiscal year 1993 SEPs will be contingent upon conformance with the terms and conditions of this final rule.

o. Miscellaneous

The docket included several comments that were unrelated to the specific proposals in the NPRM. While many of these comments may be worthy of consideration, they are not discussed here because they are outside the scope of this rulemaking. For example, the California Highway Patrol discussed the recent Memorandum of Understanding between the United States and Mexico on CDLs. Additionally, one driver wrote to express his support for alcohol restrictions and to recommend that tobacco use also be prohibited. The driver's health and safety is jeopardized if he/she is fumbling with cigarettes while driving. These are interesting propositions, but not subjects for this rulemaking.

Section-by-Section Analysis

Part 350

Section 350.1 Purpose

This section is amended slightly to eliminate the distinction between development and implementation of programs that existed in the early stages of MCSAP.

Section 350.3 Definitions

The term "basic grant" is added and defined in the same way as "implementation" was defined in the current regulation. The terms "development" and "implementation" are eliminated as there is no longer a need for distinction. The definition of "commercial motor vehicle" is changed slightly to be consistent with that of the MCSA of 1984 (49 U.S.C. app. § 2501 *et seq.*), which provides the basis for the operative definition in the Federal Motor Carrier Safety Regulations (49 CFR 390.5). The FHWA does not believe the definition used in the MCSAP statute (49

U.S.C. app. § 2302), unchanged by the ISTEA, is meant to require the expansion of the class of vehicles subject to federally assisted safety regulation and enforcement by States unless that would be consistent with the class of vehicles subject to direct federal safety regulation and enforcement.

The difference is that the definition in 49 U.S.C. app. 2302 includes vehicles "designed to transport more than ten passengers, including the driver," while the definitions in 49 U.S.C. app. 2503 and 49 CFR 390.5 include vehicles "designed to transport more than 15 passengers, including the driver." It is inconceivable that Congress intended for different definitions to apply to State and Federal enforcement activities when the core purpose of the MCSAP is to encourage States to adopt and enforce compatible regulations. The FHWA, therefore, is interpreting the definition in the grant statute as permissive, and is adopting a narrower definition for purposes of prescribing which regulations are compatible with the Federal regulations so that related enforcement activities may be eligible for MCSAP funding.

The FHWA is also defining "compatible or compatibility" in the final rule for purposes of determining eligibility for State participation in the MCSAP, setting tolerance guidelines for deviations, and considering preemption decisions.

The definitions of "driver/vehicle out-of-service order" and "imminent hazard" proposed in the NPRM are being dropped because they were not used in the final rule. The term "motor carrier" is amended to exclude private carriers of passengers which are not presently covered under the FMCSR.

Section 350.5 Policy

This section remains unchanged from the original rule and the NPRM. It includes the FHWA's policy of encouraging a comprehensive and coordinated national program of uniform compliance and enforcement of motor carrier safety regulations.

Section 350.7 Objective

This section is unchanged from the original rule and the NPRM. The objective of MCSAP is to reduce the number and severity of commercial motor vehicle accidents and hazardous materials incidents through effective enforcement.

Section 350.9 Conditions for Basic Grant Approval

This section is renumbered in the final rule, occupying a place that was reserved in the NPRM. Section 350.11 of the NPRM, as modified, is redesignated as § 350.9 in the final rule. Section 350.9(b) of the original rule is retained in this final rule. The largest portion of the MCSAP funds are allocated by formula to States which participate in the national program of comprehensive, uniform commercial motor vehicle safety programs. The ISTEA added new requirements and optional, eligible activities to enhance the overall effectiveness of the MCSAP. These include, e.g., participation in the enforcement data system SAFETYNET, use of fines consistent with the recommended fine schedule published by the CVSA, improved traffic enforcement, and verification of correction of violations found during roadside inspections.

There are three other changes in this section from the NPRM. Section 350.9(g) is added to require a State's commitment to maintenance of effort as a condition of MCSAP participation. Section 350.11(d) through (g) of the NPRM are designated as §§ 350.9(c) through (f) in the final rule, and clarifications are made in the last paragraph (§ 350.9(p) in the final rule) on verification of correction of out-of-service violations.

In the final rule, § 350.9(h) [NPRM § 350.11(h)] is inserted to require, as a condition of grant approval, that the State certify that it will maintain its level of effort as defined under § 350.17. The NPRM had proposed to continue the requirement that the State include in its State Enforcement Plan (SEP) an actual calculation of these costs. This has been deleted from the SEP and replaced by self-certification under this section. States should be aware that the certification is subject to subsequent audit, and failure to comply with the maintenance of effort requirement could result in a proportional reduction of MCSAP funding.

The third change to this section is to clarify the wording of paragraph (p). The NPRM would have required States to "ensure comprehensive enforcement and *random* reinspection of vehicles and drivers placed out-of-service" (emphasis added). The word "random" is deleted from the final rule because it is likely to be construed as requiring mathematically "random" activities. The States must develop effective reinspection techniques, including such strategies as covert surveillance and unpredictable reinspection and records verification. In addition, the phrase "and the correction of other violations cited on roadside inspection reports" is added to make it clear that the States' activities to verify correction of violations includes both severe violations resulting in an out-of-service order as well as other less critical safety violations.

Section 350.11 Adopting Enforcing Compatible Laws and Regulations

This section is added to the final rule to provide a process by which compatibility determinations are made and the Tolerance Guidelines are maintained. It parallels the provision in § 355.25 by which preemption decisions are made. This section makes it clear that funding under MCSAP is conditioned upon the adoption and enforcement of State laws and regulations that are compatible with the FMCSR and HMTR. It incorporates the requirement for annual State review of its laws and regulations previously included in what is now § 350.9, Conditions of basic grant approval. It also contains excerpts from the proposed Tolerance Guidelines that were regulatory in nature. It describes the effect that compatibility determinations have on continued funding by relating the process to § 350.27, Procedure for withdrawal of approval. Also, it provides that compatibility decisions requiring interpretations of hazardous materials regulations will be referred to the RSPA before any determinations affecting funding are made by the FHWA.

With respect to the adoption of changes to the Federal regulations, the States will be required to become compatible as soon as possible, but no later than three years from the effective date of the change. This is consistent with part 355 and the instructions appended thereto concerning the required review of State laws and regulations. The States that currently have incompatible laws or regulations applicable to intrastate commerce only will have an additional two years from the effective date of the final rule to come into compliance. Two years will ensure that each affected State will have at least one legislative session in which to achieve compatibility. Those States, however, with incompatible regulations applicable to interstate commerce which have already been brought to their attention through the Safety Panel review process will be subject to the provisions of part 355 as of the effective date of the final rule.

Section 350.13 State Enforcement Plan (SEP) for a Basic Grant

This section describes what a State must include and address in its SEP. Appendix A provides further guidance to the States on the preparation of the SEP.

This section reflects several changes based on the comments to the docket. Paragraph (b)(2), which required the States to calculate expenditures in the base period to determine the required maintenance of effort as part of the SEP, has been deleted. As discussed above, the States now self-certify compliance with this requirement. A new paragraph (b)(2) has been substituted which requires the States to identify their penalty structures, to evaluate their reasonableness and appropriateness, and to indicate the steps being taken to approximate the published CVSA fine schedule, if necessary.

Paragraph (b)(4) requires the State to describe its objectives, resources, work items, costs, and its means to measure the effectiveness of the commercial motor vehicle safety activities. In paragraph (b)(4)(iv), the State must describe its specific activities to ensure violations cited during driver and vehicle roadside inspections are corrected. A new sentence is added to this paragraph to require the States to evaluate the effectiveness of their activities in this area. States will need to periodically conduct covert operations to determine the extent of compliance with the State's out-of-service orders. As the States continue to develop strategies that are effective deterrents to inherently unsafe practices of continuing operation of defective equipment or by ineligible drivers, the State should make appropriate adjustments.

Section 350.15 Certification of Compliance by State

This section requires that the State certify compliance with the conditions for basic grant approval. This section is unchanged from the NPRM, but appendix B is amended to include certification of maintenance of effort.

Section 350.17 Maintenance of Effort

Based on the comments received and consideration of the intent of the legislation, practices of other agencies with maintenance of effort requirements, and program continuity, this section has been changed. Although the proposed rule had provided a State two methods by which to calculate its MOE, the final rule consolidates and clarifies this section. No calculation of base year expenditures will be required to be submitted as part of the SEP. The State need only certify that it is committed to maintaining its level of expenditures of State funds, exclusive of State funds used to match MCSAP funds and any State funds used in connection with pilot projects under this program, for commercial motor vehicle safety programs and for enforcement of truck size and weight limitations, drug interdiction, and traffic enforcement, at a level which does not fall below the average level of expenditures for its last three full fiscal years preceding December 18, 1991 (fiscal year 1989, 1990, and 1991). The fiscal years may be either Federal fiscal years or State fiscal years, at the State's option. Certifications will be subject to subsequent audit. For purposes of determining compliance with this requirement, only State funds expended during the base period for activities conducted by those State agencies participating in MCSAP during the base period or those currently participating need be counted. Moreover, only expenditures during the base period on those enforcement activities which were then eligible or are currently being funded under MCSAP need be counted. For example, a MCSAP agency was performing traffic enforcement in conjunction with MCSAP funded roadside inspections during the base period. The level of expenditures on that type of traffic enforcement must be maintained as long as the State agency is a grantee in the MCSAP. The MCSAP agency may cease performance of an eligible activity, but the level of effort included in the MOE must be maintained as long as the MCSAP agency is participating in the grant. If such enforcement activity was being performed in the State during the base period by a non-MCSAP agency, those State expenditures need only be considered if, in the current year, that agency is receiving MCSAP funds.

Finally, if a subsequent audit reveals that the State is not maintaining or has not maintained its level of effort as certified, the State will have an opportunity to provide information to support the certification. A final determination of noncompliance will result in a proportional reduction of the State's current allocation, and those funds will be immediately available for reallocation.

Section 350.19 Grant Application Submission

This section is unchanged from the original rule and the NRPM. It establishes that the SEPs are due to the Office of Motor Carriers Division Office by August 1 of each year. For the Federal fiscal year beginning October 1, 1992, the States may have until December 31, 1992, to amend their SEPs to meet all the requirements of this rule. This grace period is necessary because of the changes brought about by this rule.

Section 350.21 Distribution of Funds

This section includes the formula used to distribute the basic grant. The formula factors will use the most recently available final data. In most cases, this will mean a gap of about two fiscal years. For example, highway statistics for FY 1990 are finalized by the Spring of 1992 and will be used for FY 1993 allocations. Generally, the FHWA notifies the States of their anticipated formula allocations for the next fiscal year in the Spring when the States are beginning to develop their SEPs. These preliminary formula allocations are estimates because the level of funding for the MCSAP may change through the appropriations process.

Paragraph (e)(1) is modified to clarify that any eligible MCSAP activity can be included under the State's basic grant activities. However, it should be noted that § 350.9(1) requires the State to ensure that the newly eligible activities of size and weight enforcement, traffic enforcement, and drug interdiction do not diminish the effectiveness of the existing motor carrier safety programs.

Paragraph (f) is revised to facilitate the FHWA's intention to accommodate, to the extent practicable, the needs of those States which had been receiving relatively large secondary grants in previous years to avoid substantial cutbacks in successful programs due to State fiscal constraints. Therefore, funds which have not been awarded to States under application of the allocation formula and the provisions for additional allocations under supplemental or special grants, may be distributed at the discretion of the Administrator. The primary purpose of any such redistribution is to prevent a decrease in the amount of Federal funds used by particular States in previous years to support effective and innovative programs. Preference will be given to those States which have maintained effective federally assisted programs at levels beyond that possible if limited to formula allocations and proportional supplemental allocations.

Sections 350.23, 350.25, and 350.27 Review, Approval, and Withdrawal Process for State Plans

These sections remain unchanged from the NPRM. These are the same procedures used under the original MCSAP rule with wording updates to reflect the new grant structure.

Section 350.29 Eligible Costs

Only paragraph (j) of this section is modified to clarify the wording. The remainder of the section is the same as was proposed in the NPRM. Newly

eligible activities including size and weight, traffic enforcement, and drug interdiction activities are covered under paragraph (c). While these are eligible activities, the rule limits these activities to those carried out in conjunction with an appropriate type of inspection or at specific geographical locations (for size and weight activities) or where the weight of the vehicle can significantly affect the safe operation of the vehicle. Further, it should be noted that § 350.9(1) requires that the State ensure that these activities do not diminish the effectiveness of current commercial motor vehicle safety programs.

Paragraph (j) of this section is amended to provide that the eligibility of specific costs *must* be necessary, reasonable and allocable to the approved *plan* (emphasis added), which is consistent with 49 CFR Part 18, Uniform Administrative Requirements for Grants and Cooperative Agreements to State and Local Governments.

Appendix A—Guidelines To Be Used in Preparing State Enforcement Plan

This appendix provides additional guidance to the States on preparing the SEP. In ongoing discussions and coordination with the States, the FHWA is continuing to identify ways to streamline, simplify, and improve the SEPS. The revisions to the SEP guidelines generally do not change the substance of what is to be included in the SEP, but will eliminate duplication of information requested. Further, a few requirements are dropped while information on new program activities are added.

A new paragraph 2, *Program Summary,* is added. It combines into one section paragraphs with the headings *Define the problem, Determine current enforcement efforts, Establish objectives,* and *Program evaluation.* While the contents of these sections is generally unchanged, this regrouping will help the States avoid some duplication.

Paragraph 2(g) in the NPRM which directed the States to consider the operational and economic impact of increased enforcement as part of collecting data and information to define the problem is added to paragraph (d), *Provide for evaluation,* because it is an analysis of the results of specific enforcement activities rather than a factor in problem definition.

Paragraphs 2 (h) and (i) in the NPRM are deleted because this information is provided in other sections. Paragraph 2(h) directs the State to consider its ability to prevent commercial motor vehicle operators from circumventing inspection sites. This is deleted as a factor under problem definition because it is covered under paragraph 2(c)(2) *Describe the practices,* and the enforcement strategies would be covered under the program evaluation section. Similarly, paragraph 2(i) of the NPRM is deleted because costs of the plan are fully covered under *Identify resources.*

A parenthetical statement is added to the end of this section to acknowledge that the States may not now have all of the data that they need regarding traffic violations, impaired drivers and overweight vehicles. They will need to begin to compile this data to evaluate and improve the effectiveness of their programs.

Parts of paragraph 2(b), *Determine current enforcement efforts,* are deleted because they are covered under other sections of the SEP. Under this section the State describes its current commercial motor vehicle safety and hazardous materials activities. This section does not need to include a description of existing laws and regulations because this will be addressed and included as part of the part 355 review and Tolerance Guidelines process. In addition, while the plan should include a description of other agencies within the State with enforcement responsibilities to identify opportunities for coordination and cooperation, it does not need to include the "resources devoted by these agencies and the cost to the State or local government of these efforts." This cost information, if applicable, would be considered in the State's MOE certification.

Appendix B—Form of State Certification

This appendix is essentially unchanged. The only significant additions are that the State must include the name of the State highway safety representative with whom coordination was accomplished, and because of self-certification, the State is no longer required to include the level of expenditure for its maintenance of effort.

Appendix C—Tolerance Guidelines for Adopting Compatible State Rules and Regulations

The Tolerance Guidelines remain basically the same as they appear in the NPRM, except that procedural requirements are now included under § 350.11.

Part 355

This part, dealing with preemption determination with respect to State laws and regulations applicable to interstate commerce, remains virtually unchanged from the NPRM. The regulations in this part require an annual review of State laws and regulations to be completed and submitted with the MCSAP grant applications to take up where the Safety Panel left off. Guidelines for conducting the review are provided in appendix A to this part, and make it clear that States will have three years within which to adopt any changes to the Federal regulations before any incompatibility determination can be made. Those State laws or regulations that have already been determined to be incompatible under the Safety Panel review process will be subject to the provisions of this part on the effective date of the final rule.

Rulemaking Analyses and Notices

Executive Order 12291 (Federal Regulation) and DOT Regulatory Policies and Procedures

The action taken by the FHWA in this document will amend the regulation governing the Motor Carrier Safety Assistance Program, which has been reauthorized for an additional six years. The final rule restates the basic eligibility requirements for participation in the MCSAP and adds the further program elements required by the ISTEA. The FHWA has determined that this document does not contain a major rule under Executive Order 12291. The requirements contained in this document would not result in an annual effect on the economy of $100 million or more, or lead to a major increase in costs or prices, or have significant adverse effects on the United States economy. However, the FHWA has determined that this is a significant regulation under the regulatory policies and procedures of the Department of Transportation because of substantial public, congressional, and State government interest in this rule. The requirements of this document affect over 1.5 million inspections of commercial motor vehicles each year, as well as over 10,000 on-site reviews of the safety management practices of motor carriers.The economic impacts of this rulemaking that will occur are primarily mandated by the statutory provisions themselves. A regulatory evaluation is not required because of the ministerial nature of this action.

Regulatory Flexibility Act

In compliance with the Regulatory Flexibility Act (Pub. L. 96–354), the agency has evaluated the effects of this rule on small entities. This rule primarily relates to the requirements States must meet to be eligible for Federal funding

under the MCSAP. This rule does not impose any direct requirement on small entities that will result in increased economic costs. Based on this evaluation, the FHWA certifies that this rule would not have a significant economic impact on a substantial number of small entities.

Executive Order 12612 (Federalism Assessment)

This action has been analyzed in accordance with the principles and criteria contained in Executive Order 12612. Although this rule relates to the requirements that States must meet to be eligible for Federal funding, federalism implications, though unavoidable, have been kept to a minimum. This rule does implement express preemption provisions contained in the MCSA of 1984. The preemptive authority therein furthers the goal of national uniformity of commercial motor vehicle safety regulations and their enforcement, as intended by Congress. This intention was evidenced in the STAA of 1982, creating the MCSAP; the review of State commercial motor vehicle safety laws and regulations and determinations of compatibility required by the MCSA of 1984; and the intrastate compatibility provision in section 4002 of the ISTEA. The FHWA believes that the requirements contained in this document are consistent with the principles and criteria in E.O. 12612 for the implementation of express statutory provisions.

Executive Order 12372 (Intergovernmental Review)

Catalog of Federal Domestic Assistance Program Number 20.217, Motor Carrier Safety. The regulations implementing Executive Order 12372 regarding intergovernmental consultation of Federal programs and activities apply to this program.

Paperwork Reduction Act

The collection of information requirements contained in the existing 49 CFR part 350 have been approved by the Office of Management and Budget (OMB) under the Paperwork Reduction Act of 1980, 44 U.S.C. 3501 *et seq.*, and have been assigned OMB control number 2125–0536. Approval for the amended requirements in this rule is being sought from the OMB.

National Environmental Policy Act

The agency has analyzed this action for the purpose of the National Environmental Policy Act of 1969 (42 U.S.C. 4321 *et seq.*) and has determined that this action would not have any effect on the quality of the environment.

Regulation Identification Number

A regulation identification number (RIN) is assigned to each regulatory action listed in the Unified Agenda of Federal Regulations. The Regulatory Information Service Center publishes the Unified Agenda in April and October of each year. The RIN number contained in the heading of this document can be used to cross reference this action with the Unified Agenda.

List of Subjects in 49 CFR Parts 350, 355, and 396

Grant programs—transportation, Highway safety, Highways and roads, Motor carriers, Motor vehicle safety, Penalties.

Issued on: August 31, 1992.

T.D. Larson,

Administrator.

In consideration of the foregoing, the FHWA amends title 49, Code of Federal Regulations, subtitle B, chapter III as set forth below.

1. Part 350 is revised to read as follows:

PART 350—COMMERCIAL MOTOR CARRIER SAFETY ASSISTANCE PROGRAM

Sec.

350.1 Purpose.
350.3 Definitions.
350.5 Policy.
350.7 Objective.
350.9 Conditions for basic grant approval.
350.11 Adopting and enforcing compatible laws and regulations.
350.13 State Enforcement Plan (SEP) for a basic grant.
350.15 Certification of compliance by State.
350.17 Maintenance of effort.
350.19 Grant application submission.
350.21 Distribution of funds.
350.23 Acceptance of State plan.
350.25 Effect of failure to submit a satisfactory State plan.
350.27 Procedure for withdrawal of approval.
350.29 Eligible costs.

Appendix A to Part 350—Guidelines To Be Used in Preparing State Enforcement Plan

Appendix B to Part 350—Form of State Certification

Appendix C to Part 350—Tolerance Guidelines for Adopting Compatible State Rules and Regulations

Authority: 49 U.S.C. app. 2301–2304, 2505–2507; 49 U.S.C. 3102; Sec. 15(d), Pub. L. 101–500, 104 Stat. 1213, 1219; Secs. 4002 and 4009, Pub. L. 102–240, 105 Stat. 2140; 49 CFR 1.48.

§ 350.1 Purpose.

The purpose of this part is to prescribe requirements for Federal assistance to States for programs to adopt and enforce Federal rules, regulations, standards and orders applicable to commercial motor vehicle safety or compatible State rules, regulations, standards and orders.

§ 350.3 Definitions.

As used in this part:

Administrator means the Federal Highway Administrator.

Basic allocation means only those Federal funds distributed by the allocation formula, or the minimum funding level specified in this part.

Basic grant means the funds available to a State for carrying out an approved State Enforcement Plan (SEP), which include, but are not limited to:

(1) Recruiting and training of personnel, payment of salaries and fringe benefits, the acquisition and maintenance of equipment except those at fixed weigh scales for the purposes of weight enforcement, and reasonable overhead costs needed to operate the program;

(2) Commencement and conduct of expanded systems of enforcement;

(3) Establishment of an effective out-of-service and compliance enforcement system; and

(4) Retraining and replacing staff and equipment.

Commercial motor vehicle means any self-propelled or towed vehicle used on the public highways in commerce to transport passengers or property when:

(1) The vehicle has a gross vehicle weight rating or gross combination weight rating of 10,001 or more pounds; or

(2) The vehicle is designed to transport more than 15 passengers, including the driver; or

(3) The vehicle is used in the transportation of hazardous materials in quantities requiring placarding under regulations issued by the Secretary of Transportation pursuant to the authority of the Hazardous Material Transportation Act, as amended (49 U.S.C. app. 1801 *et seq.*).

Compatible or *compatibility* means, in relation to State laws and regulations pertaining to commercial motor vehicle safety, having the same effect as the Federal Motor Carrier Safety Regulations (FMCSR) or Federal Hazardous Materials Regulations (FHMR) in that those State rules are either identical or fall within the tolerance guidelines in appendix C to this part.

Motor carrier means a for-hire carrier of passengers or property by motor vehicle and a private carrier of property by motor vehicle.

State means a State of the United States, the District of Columbia, the Commonwealth of Puerto Rico, the Virgin Islands, American Samoa, Guam, or the Commonwealth of the Northern Marianas.

§ 350.5 Policy.

The Federal Highway Administration (FHWA) policy is to encourage each State to enforce uniform motor carrier safety and hazardous materials regulations for both interstate and intrastate motor carriers and drivers. The requirements for compliance with safety standards in one State should be compatible with the requirements in another State. A coordinated program of inspection and enforcement activities is needed to avoid duplication of effort, to promote compliance with uniform safety requirements by all types of motor carriers, and to provide a basis for sanctioning carriers for poor safety performance.

§ 350.7 Objective.

The objective of the Motor Carrier Safety Assistance Program (MCSAP) is to reduce the number and severity of accidents and hazardous materials incidents involving commercial motor vehicles by substantially increasing the level and effectiveness of enforcement activity and the likelihood that safety defects, driver deficiencies and unsafe carrier practices will be detected and corrected.

§ 350.9 Conditions for basic grant approval.

(a) The State shall agree to adopt, and to assume responsibility for enforcing the Federal Motor Carrier Safety Regulations (FMCSR) (49 CFR parts 390 through 399, except as may be determined by the Administrator to be inapplicable to a State enforcement program) including highway related portions of the Federal Hazardous Materials Regulations (FHMR) (49 CFR parts 107, 171–173, 177, 178 and 180), or compatible State rules, regulations, standards, and orders applicable to motor carrier safety, including highway transportation of hazardous materials.

(b) The State shall submit a State Enforcement Plan (SEP) for the conduct of an effective safety program. Such plan, upon acceptance by the FHWA, will serve as the basis for monitoring and evaluating performance of the State under the grant, and will be resubmitted, with revisions as necessary, in applications for reapproval in following years.

(c) The SEP shall designate the lead State agency responsible for administering the plan for the State.

(d) The agencies named to perform functions under the plan shall have the legal authority, resources, and qualified personnel necessary to enforce the FMCSR and FHMR or compatible State rules at the time the State implements the approved SEP.

(e) The State shall allocate adequate funds for the administration of the SEP and the enforcement of the FMCSR and FHMR or compatible State rules.

(f) State laws shall provide for right of entry and inspection adequate to carry out the SEP and provide that the State will grant maximum reciprocity for inspections conducted pursuant to the North American Uniform Driver/Vehicle Inspection standard, through the use of a nationally accepted system allowing ready identification of previously inspected commercial motor vehicles.

(g) The State shall certify that it will maintain its aggregate expenditure of funds by the State and political subdivisions thereof, exclusive of Federal funds, for commercial motor vehicle safety programs and related programs eligible for funding under this part, as required by § 350.17 of this part.

(h) The State shall agree to prepare and submit all reports required in connection with the SEP or other conditions of the grant to the FHWA upon request.

(i) The lead State agency shall agree to adopt such uniform reporting requirements and use such uniform forms to record work activities performed under the SEP as may be established and required by the FHWA.

(j) The State shall require registrants of commercial motor vehicles to declare, at the time of registration, knowledge of the FMCSR and FHMR or compatible State rules, as applicable.

(k) The statutory authority of the State to regulate motor carriers shall extend to private motor carriers of property as well as for-hire motor carriers.

(l) The State shall ensure that commercial motor vehicle size and weight enforcement, drug interdiction, and traffic enforcement activities funded under this program will not diminish the effectiveness of other commercial motor vehicle safety enforcement programs.

(m) The State shall take appropriate steps to ensure that fines imposed and collected by the State for violations will be reasonable and appropriate and, to the maximum extent practicable, will seek to implement into law and practice the recommended fine schedule published by the Commercial Vehicle Safety Alliance.

(n) The State will participate in the SAFETYNET no later than January 1, 1994.

(o) The State will undertake efforts to emphasize and improve enforcement of State and local traffic laws as they pertain to commercial motor vehicle safety.

(p) The State will ensure comprehensive enforcement and reinspection of vehicles and drivers placed out of service to verify compliance with lawful orders and the correction of all violations cited on roadside inspection reports.

§ 350.11 Adopting and enforcing compatible laws and regulations.

(a) No funds shall be awarded under this part to States that do not adopt and enforce laws and regulations that are compatible with the FMCSR (except as may be determined by the Administrator to be applicable) and the FHMR, unless otherwise provided in the Tolerance Guidelines (appendix C to this part).

(b) The State shall conduct an annual review of all its laws and regulations pertaining to commercial motor vehicle safety to determine their compatibility with the FMCSR and FHMR. The review shall be carried out in accordance with part 355 of this subchapter. To support a State's contention of compatibility, the State may submit opinions from the State's Attorney General or other chief legal officer with respect to the effect and enforceability of State laws, rules, regulations, standards, or orders in relation to the FMCSR and FHMR.

(c) State laws and regulations pertaining to commercial motor vehicle safety in interstate commerce are also subject to preemption under the provisions of § 355.25 of this chapter.

(d) State laws and regulations that are not identical to the FMCSR or FHMR will be deemed compatible for purposes of this part only if they are within the variances permitted under the tolerance guidelines in appendix C of this part.

(e) No State shall implement any changes to a State law or regulation which makes that or any other law or regulation incompatible under this section.

(f) As soon as practical after the effective date of any amendment to the FMCSR or FHMR, but no longer than three years, the applicable State law or regulation must be adopted or amended in such manner as makes it compatible with the amended Federal provision.

(g) Any State may apply for a variance related to State laws, regulations or enforcement practices pertaining to commercial motor vehicle safety in intrastate commerce, which shall be granted if the State can satisfactorily demonstrate that the State law, regulation or enforcement practice

achieves substantially the same purpose as the similar Federal rule, does not apply to interstate commerce, and has no adverse impact on safety.

(h) Upon a determination by the FHWA, on its own initiative or after determination initiated at the request of any person, including a State, that a State has failed to comply with the requirements of this part, or that a State law, regulation or enforcement practice pertaining to commercial motor vehicle safety in either interstate or intrastate commerce is incompatible with the FMCSR or HMTR, a proceeding under § 350.27 for withdrawal of approval of a State plan may be initiated. This proceeding shall be in addition to or in conjunction with any action initiated under § 355.25 of this chapter.

(i) Any decision regarding the compatibility of a State law or regulation with the FHMR that requires an interpretation will be referred to the Research and Special Programs Administration for such interpretation before proceeding under § 350.27.

§ 350.13 State Enforcement Plan (SEP) for a basic grant.

(a) As a condition of the basic grant the State shall submit its proposed SEP or update thereof to the FHWA division office.

(b) The SEP shall:

(1) Provide an assessment of the commercial motor carrier and highway hazardous materials safety problems within the State;

(2) Identify State penalty structures applicable to enforcement activities covered in the SEP, evaluate their reasonableness and appropriateness, and indicate the steps being taken to approximate the published Commercial Vehicle Safety Alliance (CVSA) fine schedule, if necessary.

(3) Demonstrate that the State has authority to regulate and to enforce its regulations with respect to private carriers of property as well as for-hire motor carriers; and

(4) Describe in detail the objectives sought to be achieved, the resources to be employed, the work items to be performed, the unit costs where feasible and the methods to be used to measure effectiveness. Specifically, the SEP shall:

(i) Identify other agencies participating in the plan and describe the roles of each;

(ii) Identify the number and category of personnel employed and the specialized training provided;

(iii) Include roadside inspection activity at such times and locations as will assure comprehensive enforcement;

(iv) Describe the proposed reinspection activities that would ensure motor carriers had made timely corrections of the out-of-service defects and other safety violations cited on the roadside inspection reports and that out-of-service drivers came into compliance with the regulations. These reinspection activities shall include covert operations to determine the extent of compliance with the State's out-of-service orders. State enforcement activities to remedy out-of-service violations shall depend on the extent of the verification problem and may include, but are not limited to: on-site reinspection activities; covert surveillance activities; safety and compliance review programs; and other State proposed activities approved by the FHWA; and

(v) Describe the tracking system to be used by the State to ensure that the motor carrier has certified to the correction of the safety violations and returned the inspection report to the issuing agency.

(5) Be coordinated with the State highway safety plan under 23 U.S.C. 402.

(6) Describe the methods the State will use to promote:

(i) Removing impaired drivers from the highways through enforcement of regulations on the use of alcohol and controlled substances and by ensuring ready roadside access to alcohol detection and measuring equipment;

(ii) Appropriate training to its personnel on the recognition of drivers impaired by alcohol or controlled substances;

(iii) Enforcement of requirements relating to the licensing of commercial motor vehicle drivers, including checking the status of commercial driver's licenses;

(iv) Improved enforcement of hazardous materials transportation regulation by encouraging more inspections of shipper facilities and comprehensive inspections of hazardous materials loads;

(v) Effective controlled substance interdiction activities and training on strategies for carrying out such activities; and

(vi) Effective use of trained and qualified officers and employees of political subdivisions and local governments, under the direction and supervision of the lead agency, in enforcement of commercial motor vehicle safety and hazardous materials transportation safety.

(7) Document, if funds are used for vehicle size and weight, alcohol/controlled substance checks, drug interdiction and/or traffic law enforcement, that such activities are carried out in conjunction with an appropriate type of vehicle or driver inspection.

(c) Guidelines for the preparation of the SEP are provided in appendix A to this part.

(Approved by the Office of Management and Budget under control number 2125–0536)

§ 350.15 Certification of compliance by State.

The FHWA will accept a certification, executed by the Governor, the State's Attorney General or other State official specifically designated by the Governor, in the form provided in appendix B to this part, that the State is in compliance with the conditions of § 350.9 of this part. The certification shall accompany the SEP and be made part thereof. The certification shall be supplemented by a copy of any State law, regulation or forms pertaining to commercial motor carrier safety adopted since the State's last certification, if any, which bear on the items listed in the certification. The certificate should acknowledge that activities described in § 350.9 will be performed.

§ 350.17 Maintenance of effort.

(a) No SEP shall be approved or grant awarded in the absence of a commitment by the State to maintain the aggregate expenditure of funds by the State for commercial motor vehicle and highway hazardous materials safety programs as provided in this section.

(b) The State shall certify each year that the level of State funding for the 12-month period covered in the SEP for motor carrier and highway hazardous materials safety, size and weight, traffic safety and drug interdiction enforcement purposes shall not fall below the average aggregate expenditure of funds, exclusive of Federal funds and any State matching funds used to receive Federal funding, for those purposes in the base period of three full fiscal years prior to December 18, 1991. The State may elect to use either Federal fiscal years or State fiscal years at its option.

(c) In determining whether a State has complied with this maintenance of effort commitment, expenditures of State funds for federally sponsored demonstration or pilot programs need not be included in aggregating expenditures in the base period.

(d) For the purpose of determining the State's expenditures in the base period, only costs associated with activities performed by State or local agencies currently receiving or projected to receive funds under this part must be counted, and only those activities which meet the most current requirements for funding eligibility under the grant program must be included.

(e) If it is determined that a State has not maintained its level of expenditures as certified, the State shall be notified of the deficiency. Upon receipt of such notification, the State shall have the opportunity to submit information to substantiate the certification.

(f) If, after consideration of all information, it is finally determined that a State has failed to meet its maintenance of effort requirement, an amount equal to the deficiency shall be deducted from the State's current allocation. That amount will then be available for reallocation under § 350.21 of this part.

§ 350.19 Grant application submission.

A State shall submit its application to the FHWA division office on or before August 1 of each year. The time for submitting a plan may be extended for a period not to exceed 30 calendar days for good cause shown. Grants are approved for the fiscal year for which application is made. Failure of a State to submit a plan for any given fiscal year will preclude consideration of grant approval for that State for that year.

§ 350.21 Distribution of funds.

(a) The Federal share payable to reimburse States for eligible costs incurred in the administration of a commercial motor carrier safety program shall not exceed 80 percent.

(b) The FHWA will, upon request, waive the requirement for matching funds to be provided by the Virgin Islands, American Samoa, Guam, or the Commonwealth of the Northern Marianas.

(c) The funds available to any State for a basic grant in any one year shall be distributed according to an allocation formula based on the most recent reliable data concerning the following factors in equal proportion:

(1) Road mileage (all highways);

(2) Vehicle miles travelled (all vehicles);

(3) Number of commercial vehicles over 10,000 pounds (gross vehicle weight rating);

(4) Population (most current census); and

(5) Special fuel consumption (net after reciprocity adjustment).

(d) Subject to the availability of funds, the individual allocations shall be adjusted so that no State qualifying for an award shall be allocated more than a ceiling amount, which shall be no less than the ceiling amount used in the previous year's distribution process. The ceiling shall be increased each fiscal year in proportion to the amount of increase in the funds available for distribution in that fiscal year. The allocation formula shall also be adjusted so that no State qualifying for an award shall be allocated:

(1) Less than the basic allocation of funds received in the 1991 fiscal year, provided the SEP continues to support that level of funding; or

(2) Less than 0.5 percent of the total amount allocated to all States (or $250,000, whichever is greater).

(e) Funds will be allocated to States in recognition of innovative, successful, cost efficient or cost effective programs to promote commercial motor vehicle safety and hazardous materials transportation safety and provide incentives to States that conduct traffic safety enforcement activities done in conjunction with motor carrier safety inspections. The allocations will be done in three separate grants:

(1) Basic grants—funds used to perform commercial vehicle safety activities such as driver/vehicle inspections, safety reviews and compliance reviews. Allocation for basic grants will be made pursuant to paragraphs (c) and (d) of this section. Unused basic allocations will be periodically redistributed. Any eligible MCSAP activity can be included under the State's basic grant activities.

(2) Supplemental grants—funds used to conduct additional activities or innovative programs demonstrated to be effective and cost-efficient, and may include emphasis areas established by policy in consultation with the States. To be eligible for a supplemental grant, a State must qualify for a basic grant. Unused supplemental grant funds will be periodically redistributed among those States that are able to demonstrate innovative, cost-effective purposes consistent with the objectives of this part.

(3) Special grants—funds used by States to meet the conditions in § 350.9 regarding eligibility requirements for basic grants; or for States already participating in the basic program, to develop the prerequisites for expanded activities not presently part of their basic programs. Special grants are also available for research or data collection activities, or for projects specifically identified by statute, as, for example, commercial driver's license enforcement. To be eligible for a special grant, a State need not qualify for a basic grant.

(f) Notwithstanding any other provisions of this section, funds which have not been awarded to States under application of the allocation formula and the provisions for additional allocations contained in this section may be redistributed at the discretion of the Administrator. Subject to the availability of funds, the primary purpose of any such redistribution is to prevent a decrease in the amount of Federal funds used by particular States in previous years to support effective and innovative programs. Preference will be given to those States which have maintained effective federally assisted programs at levels beyond that possible if limited to formula allocations.

(g) The funds obligated by a State will remain available to the State for a period of the fiscal year in which obligated and the next full fiscal year. Any unexpended obligations which are to be carried over to the next fiscal year must be accounted for in the new SEP for that fiscal year. Funds must be expended in the order in which they are obligated.

§ 350.23 Acceptance of State plan.

(a) Each plan will be reviewed for content, after which the State will be notified of its acceptance or rejection.

(b) The time for submitting a plan may be extended for a period not to exceed 30 calendar days for good cause shown.

(c) Each State plan shall include an analysis of the effectiveness of its prior year's plan in reaching the stated objectives. The State will be advised whether any changes are needed in the plan or in its intended objectives.

§ 350.25 Effect of failure to submit a satisfactory State plan.

(a) A State will be notified in writing that approval of the plan is being withheld along with the reasons for such action, if:

(1) It is determined that a plan does not meet the requirements described in §§ 350.9 and 350.13; or

(2) It is determined that an SEP is not adequate to ensure effective enforcement of the FMCSR and FHMR; or compatible State rules.

(b) The State shall have 30 calendar days from the date of the notice to modify the plan and resubmit it for approval.

§ 350.27 Procedure for withdrawal of approval.

(a) If a State is not performing according to an approved plan or a State is not adequately enforcing the FMCSR and FHMR, or compatible State rules, the Administrator shall issue a written notice of proposed determination of nonconformity to the Governor of the State or the official designated in the plan. The notice shall state the reasons for the proposed determination and inform the State that it may reply in writing within 30 calendar days from the date of the notice. The reply should address the deficiencies cited in the

notice and provide documentation as necessary.

(b) The Administrator's decision, after notice and opportunity for comment, will constitute the final decision of the FHWA. An adverse decision will result in immediate cessation of Federal participation in the plan.

(c) If the State does not respond to a notice of proposed determination of nonconformity as provided in paragraph (a) of this section, the proposed determination shall become the Administrator's final decision with the same effect as paragraph (b) of this section.

(d) Any State aggrieved by an adverse decision issued under this part may seek judicial review pursuant to 5 U.S.C. ch. 7.

§ 350.29 Eligible costs.

(a) Work must be performed pursuant to an acceptable State plan in order for the cost of that work to be eligible for reimbursement. The eligible costs under the grant program are comprised of the allowable direct costs incident to the State's performance and its allocable portion of allowable indirect costs, less applicable credits.

(b) The primary functions to be performed under a basic grant are uniform roadside inspections and safety and compliance reviews with follow-up enforcement actions or compliance measures. Consequently, the major cost will be compensation and expenses of the personnel required to perform these functions.

(c) Subject to paragraph (c)(5) of this section, funds may also be used for:

(1) Enforcement of size and weight limitations;

(2) Detecting the unlawful presence of controlled substances in a commercial motor vehicle or on the person of any occupant (including the operator) of such a vehicle;

(3) Enforcement of State traffic laws and regulations designed to promote safe operation of commercial motor vehicles; and

(4) Sanitary food transportation inspections pursuant to 49 U.S.C. 2808.

(5) *Provided:* these activities are carried out in conjunction with an appropriate type of inspection for enforcement of safety regulations. Size and weight enforcement must be conducted at locations other than fixed weight facilities, at specific geographical locations where the weight of the vehicle can significantly affect the safe operation of the vehicle, or at seaports where intermodal shipping containers enter and exit the United States.

(d) Eligible personnel costs include, but are not limited to:

(1) Recruitment and screening;

(2) Training;

(3) Salaries and fringe benefits; and

(4) Supervision.

(e) Equipment and travel costs directly related to the primary functions are also eligible for proportionate reimbursement. These costs include, but are not limited to:

(1) Vehicles;

(2) Uniforms;

(3) Communications equipment;

(4) Special inspection equipment;

(5) Vehicle maintenance;

(6) Motor fuel and oil; and

(7) Travel and per diem expenses.

(f) Indirect expenses related to facilities used to conduct inspections or to house enforcement personnel, support staff, and equipment, except those related to fixed weighing facilities, may also be eligible to the extent they are measurable and recurring, such as rent and overhead.

(g) A secondary function of the MCSAP is to develop a data base on which to coordinate resources and improve efficiency. Therefore, costs related to data acquisition, storage, and analysis that are specifically identifiable as program expenses may be eligible for reimbursement.

(h) Clerical and administrative expenses, to the extent they are necessary and directly attributable to the MCSAP, are eligible for reimbursement.

(i) The cost of acquisition of real property, land and buildings, is not eligible as a participating cost in the MCSAP. Expenditures related to the improvement of real property, for example, the installation of lights for the inspection of vehicles at night or minor modifications to existing structures, are not considered acquisition costs.

(j) The eligibility of specific costs is subject to review, and such costs must be necessary, reasonable, allocable to the approved SEP, and allowable under this part and 49 CFR part 18, Uniform Administrative Requirements for Grants and Cooperative Agreements to State and Local Governments.

(k) In-kind contributions are acceptable if they represent eligible costs as established by 49 CFR part 18, OMB Circulars, agency rule or policy.

Appendix A to Part 350—Guidelines To Be Used in Preparing State Enforcement Plan

1. Designate the lead State agency: The plan should indicate the agency responsible for administering the plan.

2. Program Summary: This section includes objectives, activities, resources, costs and an analysis of the effectiveness of the program.

(a) *Define the problem:* In assessing the level of commitment to be made to the enforcement of commercial motor carrier and highway hazardous materials safety regulations, the following factors should be considered:

(1) Volume of commercial motor vehicle traffic;

(2) Type of commercial motor vehicle traffic;

(3) Volume of commercial motor vehicle traffic transporting hazardous materials;

(4) Number and frequency (rate) of commercial motor carrier accidents;

(5) Severity of accidents involving commercial motor carriers:

(i) Fatalities;

(ii) Injuries; and

(iii) Property damage.

(6) Seasonal commercial motor carrier operational patterns within the State;

(7) Type and frequency of violations of traffic safety laws and regulations pertaining to commercial motor vehicles and accidents;

(8) Use of alcohol and controlled substances by commercial motor vehicle drivers; and

(9) Problems related to overweight vehicles and safety. (The information in paragraphs 2(a) (6), (7), (8), and (9) of this appendix may or may not be available to the States at present. To be able to measure program effectiveness, however, States will need to compile this type of data.)

(b) *Determine current enforcement efforts:* The plan should identify the activities currently engaged in by the State to address the commercial motor carrier and hazardous materials safety problems. This should include a description of existing laws, regulations and compliance activities, as well as the agencies within the State with enforcement responsibilities.

(c) *Establish the objectives:* A key element in each plan is the establishment of the objectives sought to be achieved through the use of Federal funds. The objectives should be stated in terms of quantifiable measurements of results, where possible, or at least of effort. Ideally, the objectives should include a measurable reduction in highway accidents or hazardous materials incidents involving commercial motor vehicles, but may also refer to quantifiable improvements in legislative or regulatory authorities, problem identification, enforcement strategies and resource allocations.

(1) Goals should be identified as:

(i) Short term—the year beginning October 1 following submission of a MCSAP enforcement plan.

(ii) Medium term—two to four years after submission of the enforcement plan.

(iii) Long term—five years beyond the submission of the enforcement plan.

(2) Describe the practices: The plan should describe how the resources are to be employed to achieve the objectives included under 350.13 and should discuss:

(i) Schedules of operation of inspection sites and units;

(ii) Tactics for placing vehicles out of service and verifying compliance;

(iii) Projected number of annual:

(A) Roadside vehicle inspections including Commercial Driver's Licenses checks; and

(B) Safety and Compliance Reviews;

(iv) Methods to inspect all types of carriage;

(v) Strategy for preventing circumvention or avoidance of inspections;

(vi) Procedures for handling hazardous materials carriers and passenger carriers;

(vii) Supervision and recordkeeping; and

(viii) Methods used to coordinate activities with the State highway safety plan under 23 U.S.C. 402, including providing information to the appropriate State agency, describing the information provided, and discussing the comments that were received.

(3) Identify the resources: The plan should detail the resources to be used in accomplishing the objectives, and should include:

(i) State agencies involved:

(A) Lead agency; and

(B) Local and other cooperating political subdivisions.

(ii) Personnel (from each agency involved):

(A) Line functions;

(B) Staff and supervision; and

(C) Administrative, technical and clerical.

(iii) Facilities:

(A) Inspection sites regularly maintained; and

(B) Building space required.

(iv) Equipment:

(A) Vehicles;

(B) Communication and ADP; and

(C) Other specialized tools.

(v) Itemization of Costs:

(A) Personnel (salaries, benefits, etc.);

(B) Equipment (purchase, rental, fuel, maintenance, depreciation, salvage, etc.); and

(C) Facilities (rent and overhead).

(d) *Program evaluation:* Each plan should include a provision for program evaluation of the effectiveness of previous activities. This should include the economic and operational impact of increased enforcement and provisions for review and update of the plan. It is not practicable to establish objective minimums, as each State has unique characteristics and varying levels of existing enforcement activity. The FHWA will cooperate with State regulatory and enforcement agencies by gathering useful information and experience on elements of enforcement practices that produce positive results.

The bottom line objective in any safety program is a decrease in the number and severity of accidents. Motor carrier safety regulations should be designed to prescribe methods to eliminate the risks of accidents. Compliance with such regulations should, therefore, reduce accidents. The States are encouraged to design their programs to link their enforcement efforts to causes of accidents, whenever possible, and to develop the data necessary to demonstrate the results. The States are encouraged to use the safety and program performance data collected over several years to show trends and effects of program activities. In assessing State Enforcement Plans, the FHWA will be particularly attentive to the methods by which effectiveness is to be evaluated, and will provide whatever assistance is feasible in developing measurement factors.

Appendix B to Part 350—Form of State Certification

I (name), (title), on behalf of the State of _____, as requested by the Federal Highway Administrator as a condition of approval of a grant under the authority of Sec. 402 of the Surface Transportation Assistance Act of 1982 (Pub. L. 97–424), do hereby certify as follows:

1. The State (has adopted) (will adopt) commercial motor carrier and highway hazardous materials safety rules and regulations, which (are) (will be) substantially similar to and consistent with the Federal Motor Carrier Safety Regulations and the Federal Hazardous Materials Regulations (a copy of the existing or proposed State rules and regulations to be attached in the first year of the program).

2. The State has designated (name of State commercial motor carrier safety agency) as the lead agency to administer the enforcement plan for which the grant is being awarded, and (name of agencies) to perform functions under the plan. These agencies (have) (will have) the legal authority, resources and qualified personnel necessary for the enforcement of the State's commercial motor carrier and highway hazardous materials safety rules and regulations.

3. The State will devote such of its own funds as may be necessary to provide its matching share to the Federal assistance provided in the grant to administer the plan it is herewith submitting, and to enforce the State's commercial motor carrier safety rules and regulations in a manner to be consistent with the approved plan.

4. The laws of the State provide the State's enforcement officers right of entry and inspection sufficient to carry out the purposes of the enforcement plan as approved and provides that the State will grant maximum reciprocity for inspections conducted pursuant to the North American Inspection Standard, through the use of a nationally accepted system allowing ready identification of previously inspected commercial motor vehicles.

5. The State shall require that all reports relating to the program be submitted to the appropriate State agency or agencies; and such reports will be made available to the Federal Highway Administration upon request.

6. The State will adopt such uniform reporting requirements and use such uniform forms for recordkeeping, inspection, and other enforcement activities as may be established by the Federal Highway Administration.

7. The State (has) (will have) in effect a requirement that registrants of commercial motor vehicles declare knowledge of the applicable Federal or State commercial motor carrier safety rules and regulations.

8. The State will maintain the level of its expenditures for motor carrier safety programs and, if applicable, size and weight, traffic safety, and drug interdiction enforcement programs, exclusive of Federal assistance, at least at the level of the average of the aggregate expenditures of the State and political subdivisions for these purposes during the last three full fiscal years immediately prior to December 18, 1991 (fiscal years 1989, 1990, and 1991).

9. The State will ensure that commercial motor vehicle size and weight enforcement, drug interdiction, and traffic enforcement activities funded under this program will not diminish the effectiveness of other commercial motor vehicle safety enforcement programs.

10. The State will ensure that fines imposed and collected by the State for violations will be reasonable and appropriate and provides that, to the maximum extent practicable, it will seek to implement into law and practice the recommended fine schedule published by the Commercial Vehicle Safety Alliance.

11. The State will ensure that the SEP is coordinated with the State highway safety plan under 23 U.S.C. 402 and the name of the Governor's highway safety representative (or other authorized State official) through whom coordination was accomplished is _____.

12. The State will participate in the SAFETYNET no later than January 1, 1994.

13. The State will undertake efforts to emphasize and improve enforcement of State and local traffic laws as they pertain to commercial motor vehicle safety.

Date _____

Location _____

(Signature) _____

Appendix C to Part 350—Tolerance Guidelines for Adopting Compatible State Rules and Regulations

1. Introduction, Purpose and Rules of Construction

The goal of the Federal Highway Administration (FHWA) is to encourage all States to ultimately adopt motor carrier safety and hazardous materials transportation rules and regulations identical in all respects to those requirements set forth in Federal laws and regulations, applicable to both interstate and intrastate commerce. Recognizing that there are circumstances unique to each State which may require special attention in that particular State, FHWA has concluded that certain circumstances may warrant limited deviations from the Federal standards where the Federal regulations do not apply.

The purpose of this appendix is to set forth the limits within which a State's deviations to variances in adopting motor carrier safety and hazardous materials rules may extend and still be considered compatible for funding purposes under 49 CFR 350. These limits or tolerances are applicable for this purpose to those State rules and regulations applicable where the U.S. Department of Transportation does not have jurisdiction.

2. Tolerance Guidelines for State Rules and Regulations Where the U.S. Department of Transportation Also Holds Jurisdiction

(a) States shall not be required to adopt 49 CFR parts 394, 398, 399, 107, 171.15, 171.16 and 177.807 as applicable to either interstate or intrastate commerce. A State is not required to adopt 49 CFR part 178 only if the State can still enforce the standards contained therein.

(b) State rules must be applicable to the same extent as the Federal Motor Carrier Safety and Hazardous Materials Regulations except where deviation may be allowed by part 355 of this subchapter and this appendix.

3. Tolerance Guidelines for State Rules and Regulations Where the U.S. Department of Transportation Regulations Do Not Apply

(a) State rules must be applicable to the same extent as the Federal Motor Carrier Safety and Hazardous Materials Regulations except where deviation may be allowed by parts 350 and 355 of this subchapter and this appendix.

(b) States may exempt from all or part of their regulations commercial motor vehicles with a GVWR of 26,000 pounds or less. However, vehicles with a GVWR of 26,000 pounds or less may not be exempted from either the motor carrier safety regulations or hazardous materials regulations if the vehicle is used to transport hazardous materials requiring a placard or if the vehicle is designed to transport more than 15 passengers, including the driver.

(c) States may not exempt from regulation motor carriers based on the type of carriage being performed (i.e., for-hire, private, etc.).

(d) Exemptions granted to certain industries by a State prior to April 1988 and accepted by FHWA may remain valid. Although industry exemptions are strongly discouraged, a State may request and FHWA may approve such an exemption after the State has submitted to the FHWA documentation which will allow evaluation of the following or similar information:

(1) Type and scope of the industry exemption requested;

(2) Type and scope of regulatory exemption requested;

(3) Accident information related to that specific industry—ratio, frequency, comparative figures, etc.;

(4) Percentage of industry affected—number of vehicles, mileage traveled, number of companies involved, etc.;

(5) Inspection information—number of violations per inspection, out-of-service information, etc.;

(6) Other regulations enforced by other State agencies not participating in the MCSAP;

(7) Commodity transported—i.e., hazardous materials, livestock, grain, etc.;

(8) Similar exemptions granted;

(9) Reason exemption is needed;

(10) Projected effect on safety;

(11) The State's economic environment and its ability to compete in foreign and domestic markets.

(e) Regulatory exemptions based on the distance a motor carrier or driver operates from their home terminal are not deemed to be compatible. This prohibition does not apply to those exemptions already contained in the Federal Motor Carrier Safety Regulations nor to the extension of the mileage radius exemption contained in 49 CFR 395.8(i) from 100 to 150 miles.

(f) States are strongly encouraged to apply the identical regulatory and enforcement schemes to both interstate and intrastate carriers as set forth in the Federal Motor Carrier Safety Regulations when regulating drivers' hours of service. However, certain limited tolerances where the U.S. Department of Transportation's hours of service regulations do not apply are allowed. Specifically, an expansion of the 10-hour driving rule to a 12-hour driving limit, provided that the total period of time spent driving and on duty not driving is not extended to more than 16 hours and an increase in the 70 hour rule to 70 hours in 7 consecutive days or 80 hours in 8 consecutive days will be considered compatible.

(g) Drivers operating not subject to the jurisdiction of the U.S. Department of Transportation may drive if they are at least 18 years old.

(h) States may provide grandfather clauses in their rules and regulations if such exemptions are uniform or in substantial harmony with the Federal standards and provide an orderly transition to full regulatory adoption at a later date.

(i) The States may qualify any driver engaged wholly in intrastate commerce who is adversely affected by current State medical standards, upgraded to be consistent with part 391, even if the States adopted those medical standards in the past. Drivers identified through March 31, 1993, as not meeting the upgraded State standards may also be qualified. Such a driver may remain qualified after March 31, 1993, as long as an examining physician determines during the biennial medical examination that existing medical or physical conditions that would otherwise render the driver not qualified under Federal standards have not significantly worsened or another non-qualifying medical or physical condition has not developed.

It should be noted that the FHWA still considers the physical qualification standards in part 391 to be the minimum standards that contribute significantly to commercial motor vehicle operational safety. The FHWA continues to encourage States to adopt these minimum standards as their own and to use this grandfathering option judiciously to respond to legitimate hardships. This policy should in no way be interpreted as discrediting the medical standards adopted in part 391.

This guideline will not preclude a State's adoption of or continuation of a waiver program which can be demonstrated to be based on sound medical judgment combined with appropriate performance standards causing no adverse effect on safety.

2. Part 355 is added to read as follows:

PART 355—COMPATIBILITY OF STATE LAWS AND REGULATIONS AFFECTING INTERSTATE MOTOR CARRIER OPERATIONS

Subpart A—General Applicability and Definitions

Sec.

355.1 Purpose.
355.3 Applicability.
355.5 Definitions.

Subpart B—Requirements

355.21 Regulatory review.
355.23 Submission of results.
355.25 Adopting and enforcing compatible laws and regulations.
Appendix A to part 355—Guidelines for the Regulatory Review

Authority: 49 U.S.C. app. 2505—2508; 49 U.S.C. 504 and 3102; 49 CFR 1.48.

Subpart A—General Applicability and Definitions

§ 355.1 Purpose.

(a) To promote adoption and enforcement of State laws and regulations pertaining to commercial motor vehicle safety that are compatible with appropriate parts of the Federal Motor Carrier Safety Regulations.

(b) To provide guidelines for a continuous regulatory review of State laws and regulations.

(c) To establish deadlines for States to achieve compatibility with appropriate parts of the Federal Motor Carrier Safety Regulations with respect to interstate commerce.

§ 355.3 Applicability.

These provisions apply to any State that adopts or enforces laws or regulations pertaining to commercial motor vehicle safety in interstate commerce.

§ 355.5 Definitions.

Unless specifically defined in this section, terms used in this part are subject to the definitions in 49 CFR 390.5.

Compatible or *compatibility* means, in relation to State laws and regulations pertaining to commercial motor vehicle safety, having the same effect as the Federal Motor Carrier Safety Regulations in that those State laws and regulations are either identical or fall within the guidelines in appendix C of part 350.

Federal Motor Carrier Safety Regulations means those safety regulations which are contained in parts 390, 391, 392, 393, 395, 396, and 397 of this subchapter.

State means a State of the United States and the District of Columbia.

Subpart B—Requirements

§ 355.21 Regulatory review.

(a) General. Each State shall annually analyze its laws and regulations, including those of its political subdivisions, which pertain to commercial motor vehicle safety to determine whether its laws and regulations are compatible with the Federal Motor Carrier Safety Regulations. Guidelines for the regulatory review are provided in the appendix to this part.

(b) Responsibility. The State agency designated as lead agency for the administration of grants made pursuant to part 350 of this subchapter is responsible for reviewing and analyzing State laws and regulations for compliance with this part. In the absence of an officially designated Motor Carrier Safety Assistance Program (MCSAP) lead agency or in its discretion, the State shall designate another agency responsible to review and determine compliance with these regulations.

(c) State Review.

(1) The State shall determine which of its laws and regulations pretaining to commercial motor vehicle safety are the same as the Federal Motor Carrier Safety or Federal Hazadous Materials Regulations. With respect to any State law or regulation which is not the same, the State shall identify such law or regulation and determine whether:

(i) It has the same effect as a corresponding section of the Federal Motor Carrier Safety or Federal Hazardous Materials Regulations;

(ii) It applies to interstate commerce;

(iii) It is more stringent than the FMCSR or FHMR in that it is more restrictive or places a greater burden on any entity subject to its provisions;

(2) If the inconsistent State law or regulation applies to interstate commerce and is more stringent than the FMCSR or FHMR, the State shall determine:

(i) The safety benefits associated with such State law or regulation; and

(ii) The effect of the enforcement of such State law or regulation on interstate commerce.

(3) If the inconsistent State law or regulation does not apply to interstate commerce or is less stringent than the FMCSR or FHMR, the tolerance guidelines for participation in the Motor Carrier Safety Assistance Program in part 350 of this subchapter shall apply.

§ 355.23 Submission of results.

Each State shall submit the results of its regulatory review annually with its certification of compliance under 49 CFR 350.15. It shall submit the results of the regulatory review with the certification no later than August 1 of each year with the SEP. The State shall include copies of pertinent laws and regulations.

§ 355.25 Adopting and enforcing compatible laws and regulations.

(a) General. No State shall have in effect or enforce any State law or regulation pertaining to commercial motor vehicle safety in interstate commerce which the Administrator finds to be incompatible with the provisions of the Federal Motor Carrier Safety Regulations.

(b) New State Requirements. No State shall implement any changes to a law or regulation which makes that or any other law or regulation incompatible with a provision of the Federal Motor Carrier Safety Regulations.

(c) Enforcement. To enforce compliance with this section, the Administrator will initiate a rulemaking proceeding under part 389 of this subchapter to declare the incompatible State law or regulation pertaining to commercial motor vehicle safety unenforceable in interstate commerce.

(d) Waiver of Determination. Any person (including any State) may petition for a waiver of a determination made under paragraph (c) of this section. Such petition will also be considered in a rulemaking proceeding under part 389. Waivers shall be granted only upon a satisfactory showing that continued enforcement of the incompatible State law or regulation is not contrary to the public interest and is consistent with the safe operation of commercial motor vehicles.

(e) Consolidation of Proceedings. The Administrator may consolidate any action to enforce this section with other proceedings required under this section if the Administrator determines that such consolidation will not adversely affect any party to any such proceeding.

Appendix A to Part 355—Guidelines for the Regulatory Review

Each State shall review its laws and regulations to achieve compatibility with the Federal Motor Carrier Safety Regulations (FMCSRs). Each State shall consider all related requirements on enforcement of the State's motor carrier safety regulations. The documentation shall be simple and brief.

Scope

The State review required by § 355.21 may be limited to those laws and regulations previously determined to be incompatible in the report of the Commercial Motor Vehicle Safety Regulatory Review Panel issued in August 1990, or by subsequent determination by the Administrator under this part, *and* any State laws or regulations enacted or issued after August 1990.

Applicability

The requirements must apply to all segments of the motor carrier industry common, contract, and private carriers of property and for-hire carriers of passengers.

Definitions

Definitions of terms must be consistent with those in the FMCSR. For example, a commercial motor vehicle is a vehicle operating in interstate commerce on a public highway, that (1) has a gross vehicle weight rating (GVWR) of 10,001 pounds or more, (2) is designed to transport more that 15 passengers (including the driver), or (3) is used to transport hazardous materials in a quantity requiring placarding under regulations issued by the Secretary under the Hazardous Materials Transportation Act, as amended (49 U.S.C. app. 1801 et seq).

Driver Qualifications

Require a driver to be properly licensed to drive a motor vehicle; require a driver to be in good physical health, at least 21 years of age, able to operate a vehicle safely, and maintain a good driving record; prohibit drug and alcohol abuse; require a motor carrier to maintain a driver qualification file for each driver; require a motor carrier to ensure that a driver is medically qualified; and require a motor carrier to establish an anti-drug program with testing of drivers prior to employment, periodically, based on reasonable cause, after reportable accidents, and by random selection.

Note: The requirements for testing apply only to drivers of commercial motor vehicles as defined in 49 CFR part 383.

Driving of Motor Vehicles

Prohibit possession, use, or driving under the influence of alcohol or other controlled substances (while on duty); and establish 0.04 percent as the level of alcohol in the blood at which a driver is considered under the influence of alcohol.

Parts and Accessories Necessary for Safe Operation

Require operational lights and reflectors; require systematically arranged and installed wiring; and require brakes working at the required performance level, and other key components included in 49 CFR part 393.

Hours of Service

Prohibit a motor carrier from allowing or requiring any driver to drive: More than 10 hours following 8 consecutive hours off duty; after being on duty 15 hours, after being on duty more than 60 hours in any 7 consecutive days; or after being on duty more than 70 hours in any 8 consecutive days.

Require a driver to prepare a record-of-duty status for each 24-hour period. The driver and motor carrier must retain the records.

Inspection and Maintenance

Prohibit a commercial motor vehicle from being operated when it is likely to cause an accident or a breakdown; require the driver to conduct a walk-around inspection of the vehicle before driving it to ensure that it can be safely operated; require the driver to prepare a driver vehicle inspection report; and require commercial motor vehicles to be inspected at least annually.

Hazardous Materials

Require a motor carrier or a person operating a commercial motor vehicle transporting hazardous materials to follow the safety and hazardous materials requirements.

State Determinations

1. Each State must determine whether its requirements affecting interstate motor

carriers are "less stringent" than the Federal requirements. "Less stringent" requirements represent either gaps in the State requirements in relation to the Federal requirements as summarized under item number one in this appendix or State requirements which are less restrictive than the Federal requirements.

a. An example of a gap is when a State does not have the authority to regulate the safety of for-hire carriers of passengers or has the authority but chooses to exempt the carrier.

b. An example of a less restrictive State requirement is when a State allows a person under 21 years of age to operate a commercial motor vehicle in interstate commerce.

2. Each State must determine whether its requirements affecting interstate motor carriers are "more stringent" than the Federal requirements: "More stringent" requirements are more restrictive or inclusive in relation to the Federal requirements as summarized under item number one in this appendix. For example, a requirement that a driver must have 2 days off after working 5 consecutive days. The State would demonstrate that its more stringent requirements:

a. Have a "safety benefit;" for example, result in fewer accidents or reduce the risk of accidents;

b. do not create "an undue burden on interstate commerce," e.g., do not delay, interfere with, or increase that cost or the administrative burden for a motor carrier transporting property or passengers in interstate commerce; and

c. Are otherwise compatible with Federal safety requirements.

3. A State must adopt and enforce in a consistent manner the requirements referenced in the above guidelines in order for the FHWA to accept the State's determination that it has compatible safety requirements affecting interstate motor carrier operations. Generally, the States would have up to 3 years from the effective date of the new Federal requirement to adopt and enforce compatible requirements. The FHWA would specify the deadline when promulgating future Federal safety requirements. The requirements are considered of equal importance.

PART 396—INSPECTION, REPAIR AND MAINTENANCE

3. The authority citation for part 396 is revised to read as follows:

Authority: 49 U.S.C. app. 2509; 49 U.S.C. 3102; 49 CFR 1.48.

§ 396.9 [Amended]

4. Section 396.9 is amended by revising paragraph (d)(3)(ii) to read as follows:

§ 396.9 Inspection of motor vehicles in operation.

* * * * *

(d) * * *

(3) * * *

(ii) Return the completed roadside inspection form to the issuing agency at the address indicated on the form and retain a copy at the motor carrier's principal place of business or where the vehicle is housed for 12 months from the date of the inspection.

[FR Doc. 92-21332 Filed 9-4-92; 8:45 am]

BILLING CODE 4910-22-M

federal register

Tuesday
September 8, 1992

Part III

Department of Labor

Employment and Training Administration;
Wage and Hour Division

20 CFR Part 655
29 CFR Part 506

Attestations by Employers Using Alien Crewmembers for Longshore Activities in U.S. Ports; Rule

DEPARTMENT OF LABOR

Employment and Training Administration

20 CFR Part 655

RIN 1205-AA90

Wage and Hour Division

29 CFR Part 506

RIN 1215-AA70

Attestations by Employers Using Alien Crewmembers for Longshore Activities in U.S. Ports

AGENCIES: Employment and Training Administration, Labor; and Wage and Hour Division, Employment Standards Administration, Labor.

ACTION: Final rule.

SUMMARY: The Employment and Training Administration (ETA) and the Employment Standards Administration (ESA) of the Department of Labor (DOL or Department) are promulgating regulations governing the filing and enforcement of attestations by employers seeking to use alien crewmembers to perform longshore work at U.S. ports. Under the Immigration and Nationality Act, as amended by the Immigration Act of 1990 (IA), employers are, in certain circumstances, required to submit these attestations to DOL in order to be allowed by the Immigration and Naturalization Service (INS) to use alien crewmembers to perform specified longshore activity(ies) at U.S. ports. The attestation process is to be administered by ETA, while complaints and investigations regarding the attestations are to be handled by ESA.

DATES: *Effective Date:* The effective date for this final rule is October 8, 1992.

Expiration Date: Effective September 4, 1992, the expiration date of the interim final rule published at 56 FR 24648 (May 30, 1991), as corrected at 56 FR 29431 (June 27, 1991), which previously had been September 8, 1992, pursuant to 57 FR 182, 10989, 29203 and 30640 (January 3, 1992, April 1, 1992, July 1, 1992 and July 10, 1992), and as corrected at 57 FR 32894 (July 24, 1992) is extended until October 8, 1992.

FOR FURTHER INFORMATION CONTACT: On 20 CFR part 655, subpart F, and 29 CFR part 506, subpart F, contact Flora T. Richardson, Chief, Division of Foreign Labor Certifications, U.S. Employment Service, Employment and Training Administration, Department of Labor, room N-4456, 200 Constitution Avenue NW., Washington, DC 20210. Telephone: 202-535-0163 (this is not a toll-free number).

On 20 CFR part 655, subpart G, and 29 CFR part 506, subpart G, contact Mr. Solomon Sugarman, Chief, Farm Labor Programs, Wage and Hour Division, Employment Standards Administration, Department of Labor, room S-3502, 200 Constitution Avenue NW., Washington, DC 20210. Telephone: 202-523-7605 (this is not a toll-free number).

SUPPLEMENTARY INFORMATION:

I. Paperwork Reduction Act

The information collection requirements contained in the rule have been submitted to the Office of Management and Budget (OMB) for clearance under the Paperwork Reduction Act of 1980, as amended, (44 U.S.C. 3501 *et seq.*) and have been assigned OMB Control No. 1205-0309.

The Employment and Training Administration estimates that up to 5,000 employers per year will be submitting attestations. The public reporting burden for this collection of information is estimated to average 3-4 hours per response, including the time for reviewing instructions, searching existing information/data sources, gathering and maintaining the information/data needed, and completing and reviewing the attestation. It is likely that the burden will be considerably less in the second and subsequent years in which an employer submits an attestation.

Written comments on the collection of information requirements should be sent to the Office of Information And Regulatory Affairs, Office of Management and Budget, Attention: Desk Officer for Employment and Training Administration, Washington, DC 20503.

II. Background

On November 29, 1990, the Immigration Act of 1990 (IA), Public Law 101-649, 104 Stat. 4978, was enacted. The Act amends the Immigration and Nationality Act (INA) (8 U.S.C. 1101 *et seq.*) and assigns responsibility to the Department of Labor (Department or DOL) for the implementation of several provisions relating to the entry of certain categories of employment-based immigrants and to the temporary employment of certain categories of nonimmigrants. One of the new provisions of the INA the Department is charged with implementing is Section 258, which places limitations on the performance of longshore work by alien crewmembers in U.S. ports.

The loading and unloading of vessels has been traditionally performed by U.S. longshore workers. However, until now, alien crewmembers had also been allowed (by Immigration and Naturalization Service (INS) regulation) to do this kind of work in U.S. ports, because longshore work was considered to be within the scope of permitted employment for alien crewmembers. The Immigration Act of 1990 has limited this practice in order to provide greater protection to U.S. longshore workers.

Section 258 of the INA prohibits alien crewmembers admitted with D-visas from performing longshore work except in four specific instances: (a) Where the vessel's country of registration does not prohibit U.S. crewmembers from performing longshore work in that country's ports and nationals of a country which does not prohibit U.S. crewmembers from performing longshore work in that country's ports hold a majority of the ownership interest in the vessel; (b) where there is in effect in a local port one or more collective bargaining agreement(s), each covering at least 30 percent of the longshore workers at a particular port and each permitting the activity to be performed by alien crewmembers; (c) where there is no collective bargaining agreement covering at least 30 percent of the longshore workers and an attestation has been filed with the Department which states that the use of alien crewmembers to perform longshore work is permitted under the prevailing practice of the port, that the use of alien crewmembers is not during a strike or lockout, that such use is not intended or designed to influence the election of a collective bargaining representative, and that notice has been provided to longshore workers at the port; and (d) where the activity is performed with the use of automated self-unloading conveyor belts or vacuum-actuated systems; *provided that,* the Secretary of Labor (Secretary) has not found that an attestation is required because it was not the prevailing practice to utilize alien crewmembers to perform the activity or because the activity was performed during a strike or lockout or in order to influence the election of a collective bargaining representative. For this purpose, the term "longshore work" does not include the loading or unloading of hazardous cargo, as determined by the Secretary of Transportation, for safety and environmental protection and no attestations are necessary for the loading and unloading of such cargo.

III. Attestation Process and Requirements

The regulations for the attestation program for employers using alien

crewmembers for longshore work in the United States are published at 20 CFR part 655, subparts F and G, and 29 CFR part 506, subparts F and G, 56 FR 24648 (May 30, 1991).

An employer seeking to employ alien crewmembers for a particular activity of longshore work under the prevailing practice exception shall submit an attestation. An attestation is required for each port at which the employer intends to use alien crewmembers for longshore work and is valid for a period of twelve months from the time of its acceptance by DOL.

A. When and Where To File

The regulations require that any attestation received less than 14 days prior to the first performance of longshore activity by alien crewmembers will be returned to the employer as unacceptable, unless the delay is due to an unanticipated emergency. An attestation must be filed only once per year for each port at which alien crewmembers will be used. Therefore, the 14-day filing requirement applies only to the first performance of longshore work after the attestation is filed. Subsequent arrivals to the same U.S. port in the same year do not require that an additional attestation be filed.

The Department requires that all crewmember attestations be submitted to and accepted by one of four designated Employment and Training Administration (ETA) Regional Offices. Attestations for all ports located on the Atlantic Coast, Puerto Rico, and in the Virgin Islands, must be submitted to the Boston Regional Office; attestations for all ports located on the Pacific Coast, Alaska, Hawaii, and Guam, must be submitted to the Seattle Regional Office; attestations for all ports located on the Gulf of Mexico must be submitted to the Dallas Regional Office; and attestations for all ports located on the Great Lakes must be submitted to the Chicago Regional Office. The addresses of these four regional offices are on the instructions for completing the Form ETA 9033.

The ETA shall make available for public examination in Washington, DC, a list of employers which have filed attestations, and for each such employer, a copy of the employer's attestation and accompanying documentation in a timely manner after the acceptance of the attestation.

B. Acceptance for Filing

In accepting an attestation for filing, the regulations require: That the application be received by ETA at least 14 days before the first performance of the longshore activity (unless an unanticipated emergency exists as defined herein); that the Department review an attestation only to ensure that it is completed properly, that it is accompanied by the required documentation specified in the regulations, that the documentation is not, on its face, inconsistent with the attestation, and that the attestation does not involve a port or an employer for which the Department has previously made a determination which would preclude its acceptance.

Level of Federal Review of Attestations

In determining the Department's general approach to its review of employer attestations, the Department considered various approaches, ranging from the filing of all attestations with no review for completeness or compliance to a thorough review of each attestation and the accompanying documentation to determine whether the facts and evidence submitted are sufficient to prove each attestation element. The Department will review an attestation to ensure that it is received at least 14 days prior to the first performance of the longshore activity (unless it is being filed due to an unanticipated emergency), that it is completed properly, that it has accompanying documentation for each element attested to, and that the documentation is not, on its face, inconsistent with the attestation. In addition, the Department will review attestations to determine the following: (1) Whether the Administrator, Wage and Hour Division, DOL, has found that it is not a prevailing practice to use alien crewmembers for a particular activity of longshore work for a port; (2) whether the Administrator has advised ETA that it has issued a cease and desist order currently in effect that would affect the attesting employer; (3) whether the Administrator has advised ETA of a determination that an employer has misrepresented or failed to comply with an attestation previously submitted and accepted for filing, requiring the Attorney General to bar the employer from entry to any U.S. port for up to one year; and (4) whether the Administrator has advised ETA that the employer has failed to comply with any penalty or remedy assessed.

Statutory Precondition Regarding Collective Bargaining Agreements

In accordance with the precondition mandated by section 258(c)(1)(B) of the Act, an attestation may be filed only when there is no collective bargaining agreement in effect in the port covering 30 percent or more of the longshore workers. The employer therefore must attest on the Form ETA 9033 that no such collective bargaining agreement exists at the port at the time that the attestation is filed. The employer is not required to submit any documentation with the Form ETA 9033 regarding this statutory precondition. If, however, a complaint is filed which presents reasonable cause to believe that such a collective bargaining agreement is in effect, the Department will conduct an investigation. In such an investigation, the employer will have the burden of proving that no such collective bargaining agreement exists. Misrepresentation of this requirement will constitute a violation such as involves any other attestation element.

Appeals Process

The regulations do not include an administrative appeal process for attestations. When an attestation is returned because it is untimely, improperly completed, or lacking proper documentation, an employer may resubmit another attestation to the Department. Attestations which have been accepted by ETA may be objected to by an aggrieved party through the complaint process in subpart G, and procedures for investigation, hearing and appeal are provided therein. Where the Administrator makes a finding in response to a complaint regarding a prevailing practice issue, a **Federal Register** notice will be published to afford appeal rights to all potentially affected parties. The Department believes that this approach is consistent with the statute's intent for a streamlined attestation filing process and a complaint-driven enforcement system for the statute's requirements.

C. Attestation Elements

Prevailing Practice

The regulations rely on employer certification and documentation of prevailing practice for the particular activity of longshore work performed. "Longshore work" is defined in the statute as any activity (except safety and environmental protection work as described in section 258(b)(2) of the INA) relating to: (1) Loading of cargo; (2) unloading of cargo; (3) operation of cargo-related equipment (whether or not integral to the vessel), or (4) handling of mooring lines on the dock when a vessel is made fast or let go.

Under the regulations, the employer must submit facts and evidence with an attestation to show that in the 12-month period immediately preceding the filing of the attestation one of the following conditions existed: (1) Over 50 percent of vessels docking at the port used alien

crewmembers for the longshore activity; or (2) alien crewmembers made up over 50 percent of the workers who engaged in the activity.

Facts and evidence to support the prevailing practice exception shall include affidavits or summary statements of items such as prevailing practice surveys of ship masters' experience and written statements from the port authority regarding port practice. Statements from collective bargaining representatives or shipping agents, etc., with direct knowledge of practices in the port in question may also be pertinent. In the event a complaint is filed with the Department on an attestation, the employer must have sufficient documentation available on file at the place of business of its U.S. agent to meet the burden of proof for the validity of each attestation element. Documentation submitted or retained pursuant to this part shall either be in English or be accompanied by an English translation.

The Department also considered what entity should be responsible for making determinations of prevailing practice, the type of data that should be used, and the type of documentation required to support such a determination. The legislative history suggests, and the Department has adopted, a process which would rely on employer certification of prevailing practice. The consequence, however, is that if the Wage and Hour Administrator determines that an employer erroneously attests as to port practice, the statute mandates that the employer be barred by the Attorney General from entering U.S. ports for up to one year. DOL will recommend to the Attorney General that a lesser period be imposed where an employer has attested in good faith, with a reasonable belief that the documentation available is indicative that the attested longshore activity(ies) prevail. In addition, the regulations provide that if, under such circumstances, an employer withdraws an attestation prior to performance of the activity(ies) in the port, the Administrator will not find reasonable cause to conduct an investigation unless it is alleged and reasonable cause is indicated that an employer made misrepresentations or did not give the required notice.

Strike, Lockout, Election

The employer must also attest that, at the time of submitting the attestation, there is not a strike or lockout in the course of a labor dispute in the port relating to the employer's longshore activity, and that it will not use alien crewmembers during a strike or lockout during the validity period of the attestation. To substantiate this requirement, an employer may submit a statement which indicates that, prior to submitting its attestation, the employer made a good faith effort to determine whether there is a strike or lockout at the particular port, as for example, by contacting the port authority or the collective bargaining representative(s) for longshore workers at the particular port.

Notice

Lastly, an employer of alien crewmembers must attest that at the time of filing the attestation, notice of the filing has been provided to the bargaining representative(s), or where there is no such bargaining representative(s), notice of the filing has been provided to longshore workers employed at the local port. After considering a variety of approaches for providing notice to longshore workers where there is no bargaining representation, including public advertisements in newspapers and/or radio, DOL provides in the regulations that the employer must delivery a copy of the notice to the local port authority for public distribution on request. In addition, the employer is required to post the notice in conspicuous locations at the port where U.S. longshore workers can readily see the notice on their way to perform their longshore duties. The notice shall include a copy of the Form ETA 9033, shall state that the attestation with accompanying documentation has been filed and is available at the national office of ETA for review by interested parties, and shall explain where complaints can be filed with respect to employer attestations. Appropriate places for posting such notices include locations where other announcements and legally required notices, such as mandatory Fair Labor Standards Act wage and hour notices and Occupational Safety and Health Act notices, are posted. In addition, the Department shall periodically publish in the **Federal Register** a list of employers who have submitted attestations.

D. Automated Vessel Exception

DOL interprets section 258 of the INA to create a "presumption" regarding prevailing practice on certain automated vessels. The legislation creates a presumption that the use of alien crewmembers on automated vessels to do longshore work is the prevailing practice. To give this presumption effect, the regulations provide that in the case of automated vessels the burden for determining the prevailing practice does not rest with the employer who is using the exception. Rather, it must be shown by evidence submitted by any interested party that the use of alien crewmembers on automated vessels to perform a particular longshore activity at a particular port is not the prevailing practice. However, where a complainant has successfully challenged an employer's use of the automated vessel exception, and the employer has filed an attestation under the prevailing practice exception, the burden of proof shifts to the employer to show that a particular practice does, in fact, prevail at the particular port.

IV. Complaints, Investigations, and Dispositions

The INA provides that the Secretary shall establish complaint, investigation, and hearing procedures and authorizes the Secretary to issue cease and desist orders against employers. The Secretary's enforcement responsibilities are assigned to the Administrator, Wage and Hour Division, of the Department's Employment Standards Administration (ESA).

A. Complaint, Investigation and Hearing

Section 258(c)(4) of the INA requires that the Secretary establish a system to conduct investigations where a complaint presents reasonable cause to believe that an attesting employer failed to meet a condition attested to or misrepresented a material fact in its attestation, or that a non-attesting employer claiming the automated vessel exception was not qualified for the exception because the performance of the associated longshore activity does not prevail in the port, or because the activity was performed during a strike or lockout or to influence the election of a collective bargaining representative. The regulations provide that the Wage and Hour Administrator may conduct investigations of potential violations of the law only pursuant to a complaint. Based on the legislative history, this carries out Congressional intent that the enforcement of the statute should be exclusively complaint-driven. The investigative process is to be completed and a determination issued in a 180-day period, or a longer period for good cause shown. Any aggrieved person may file a complaint.

The regulations provide that, after determining that there is reasonable cause to believe that an investigation is warranted, the Wage and Hour Division will conduct an investigation in which appropriate consideration is given to any previous and relevant Departmental determination as to the prevailing

practice for the particular longshore activity(ies) and U.S. port at issue. Further, the regulations provide that, in investigating an attesting employer, the Administrator shall consider the employer's statutory burden to present and retain facts and evidence to show the matters attested. The regulations also require that the employer cooperate in the investigation and take no retaliatory action against persons who file complaints, assist in the investigation, or participate in administrative proceedings.

The regulations provide that, after the investigation is complete and a determination is made only with respect to an issue of the prevailing practice for using (or not using) alien crewmembers to perform particular longshore activity(ies) at a particular port (whether the investigation involves an attesting employer, or an employer claiming the automated vessel exception), the Department shall publish a **Federal Register** notice to advise any interested party(ies) of the Department's determination about the prevailing practice at issue and to provide any interested party(ies) the opportunity to request a hearing on the determination before an administrative law judge (ALJ). If no timely request for a hearing is filed, or after an ALJ decision is issued which reverses the Administrator's determination or which establishes that the use of alien crewmembers is not the prevailing practice for a particular longshore activity(ies) at the particular port (whether or not the later ALJ decision is a reversal of the Administrator's determination), the Department will publish a second **Federal Register** notice advising of the disposition of the prevailing practice issue. Should an ALJ's decision be further appealed to the Secretary, and the Secretary reverse the ALJ decision, the Department will publish a third notice in the **Federal Register** announcing the Secretary's decision and its effect for the prevailing practice for the activity(ies) and port in question.

Under the regulations, the second **Federal Register** notice will constitute formal advice to the public. Effective upon publication of the second **Federal Register** notice, ETA will no longer accept an attestation from any employer which attests to a prevailing practice that is contrary to the published determination by the Department. Additionally, as provided in subpart F of the regulations, ETA will review attestations previously accepted for filing from other employers to determine if a heretofore accepted attestation of prevailing practice would clearly be nullified by the Department's published determination. Where it is easily identified that the employer's attestation regards the subject prevailing practice, ETA will either suspend or invalidate the attestation and so notify the employer. Where it is unclear whether the employer's accepted attestation regards the subject prevailing practice, the employer must make a determination, based upon the second **Federal Register** notice, whether to withdraw its valid attestation. Also effective upon publication of the second **Federal Register** notice, INS will not permit the use of alien crewmembers to perform the specified activity(ies) at the port (whether the employer asserts that it has an attestation on file with ETA for such activity(ies) at such port, or claims to be entitled to the automated vessel exception). In addition, in any subsequent investigation of any employer regarding the prevailing practice for the particular activity(ies) at the port specified in the second **Federal Register** notice, the Administrator shall give conclusive effect to the determination that the prevailing practice does not permit the use of alien crewmembers. This regulatory provision was deemed necessary because, in the Department's view, to do otherwise would condone illegal activity, since the illegal use of alien crewmembers would be the only manner in which the prevailing practice could have subsequently changed (unless a collective bargaining agreement covering more than 30 percent of the longshore workers at the port came into effect and permitted such use of alien crewmembers, in which case the attestation and automated vessel exceptions would no longer be applicable).

B. Administrative Law Judge Hearing and Discretionary Review by the Secretary

Section 258(c)(4)(D) of the INA requires that the Secretary provide interested parties an opportunity for a hearing within 60 days of the date of the investigative determination. Because of this compressed time frame, the regulations require that a request for hearing be filed directly with the Chief Administrative Law Judge no later than 15 days from the date of the Administrator's determination. Further, because of the problems of proof to be anticipated in an administrative hearing on factual issues of prevailing practice which may be virtually impossible to address except through hearsay reports of surveys, or for which crucial witnesses and other evidence may be unavailable except through hearsay since, for example, the witnesses are located outside the U.S., the regulations specify that the Department's rules of evidence for ALJ proceedings shall not apply. In addition, the regulations incorporate the statutory imposition of the burden of proof on the attesting employer to establish the truth of the attestation elements.

An opportunity for discretionary review by the Secretary is afforded by the regulations, with short deadlines in accordance with the statutory intent for expedited dispositions. Any interested party may request such review, and the Secretary shall determine what matters, if any, will be reviewed.

C. Cease and Desist Order

Section 258(c)(4)(C) of the INA authorizes the Secretary, at the request of a complainant, to issue a cease and desist order against an attesting employer or against a non-attesting employer claiming the automated vessel exception. The complainant's request may be made when the Secretary has determined there is reasonable cause to conduct an investigation. The INA specifies that, if a complainant requests such an order, the employer will be notified and given 14 days within which to respond. The Secretary is then required to determine whether the preponderance of the evidence submitted supports the complainant's position and, if it does, to order that the employer cease and desist the activity(ies) at issue. The order remains in effect throughout the hearing process for the attesting employer; for the non-attesting employer claiming the automated vessel exception, the order remains in effect throughout the hearing process unless ETA accepts for filing an attestation from that employer for the activity(ies) and port which the cease and desist order affects.

The regulations provide that the complainant who desires a cease and desist order must submit two complete copies of the request and the evidence to substantiate the allegations (the second copy of the request and evidence will be provided to the employer). The Administrator's notice to the employer shall include copies of the complaint, the cease and desist order request and supporting evidence, and any other pertinent evidence from an investigation of the same or a closely related matter which the Administrator incorporates into the record. The employer, thus, will be fully informed as to the allegations and evidence. The Administrator's notice also shall specify that, during the 14 day response period specified by the

Act, the Administrator will provide, at the employer's request, an opportunity for a meeting with a Wage and Hour Division official to give the employer's views on the evidence and issues. This meeting shall be informal, shall not be subject to any procedural rules, and shall include the complainant if the complainant so desires.

The regulations specify that the cease and desist order will remain in effect unless and until withdrawn by the Administrator because the employer's position is determined to have been correct or a final determination is made which results in resolution of the matter under investigation, or—in the case of the automated vessel exception—an attestation relating to the longshore activity(ies) is accepted for filing by ETA.

D. Penalties

A violation of section 258 of the INA or the regulations thereunder by an attesting employer may result in the imposition of administrative remedy(ies), such as a civil money penalty not to exceed $5,000 per alien crewmember illegally employed. Upon notice of the violation(s), the Attorney General shall thereafter not permit the vessels owned or chartered by the employer to enter any port of the U.S. during a period of up to one year. Additionally, ETA will be notified and shall thereafter not accept any attestation from the employer for any activity(ies) at any U.S. port for one year (or for a shorter period, if such period is specified by INS).

Upon the Department's final determination that an employer improperly claimed the automated vessel exemption, the Attorney General will be notified and shall thereafter require that, before using alien crewmembers, the employer must have on file with ETA an attestation for the activity(ies) and the port at issue.

V. Analysis of Comments to Interim Final Rule

A. Introduction

On April 19, 1991, a proposed rule was published in the **Federal Register** to implement the Department's responsibilities relating to attestations by employers seeking to employ alien crewmembers (56 FY 16031). DOL reviewed the comments received from the public on the proposed rule and, subsequently, the Department published an interim final rule in the **Federal Register** on May 30, 1991, with a comment period ending July 29, 1991 (56 FR 24648). See also 57 FR 182 and 10989.

In response to the interim final rule, comments were received from eleven entities, including five representatives of the shipping industry, businesses employing international personnel, and/or their attorneys. These commenters generally asserted that the regulations should be relaxed (*e.g.*, via expanded exceptions and a less-stringent definition of "prevailing practice") in order that the attestation process not impose an undue burden on the shipping industry.

Comments jointly submitted by two major labor organizations representing U.S. workers employed in longshore work, the International Longshoremen's Association (ILA) and the International Longshoremen's and Warehousemen's Union (ILWU), generally sought to further restrict exceptions and require a tougher standard for "prevailing practice." In addition, comments from a professional legal organization were received, which asserted general support for the interim final rule, and offered recommendations to further protect both employers of alien crewmembers and members of labor organizations.

All of these comments, including those submitted in response to the proposed rule, have been reviewed and considered in preparing the final rule. Several changes to the interim final rule, discussed below, have been made as a result of this review.

B. Changes in Final Rule

1. Statutory Precondition Regarding Collective Bargaining Agreements

Comments received from four Members of Congress and from the Immigration and Naturalization Service (INS) focused, in large part, on the respective roles of DOL and INS regarding the application and enforcement of the statutory precondition to the filing of an attestation—namely, that no collective bargaining agreement (CBA) exist covering 30 percent or more of the individuals involved in longshore work in a port. The Congressional commenters, who had sponsored Section 203 of the IMMACT legislation, objected to the DOL regulatory structure which did not include in the attestation process any provision requiring employers to attest to the requirement that no CBA exist covering 30 percent or more of the longshore workers in the port; the DOL interim final rule contemplated that all enforcement responsibility regarding CBAs would rest with INS because this is not specified as a statutory attestation element. According to these legislators, the DOL regulation was flawed in that "[t]he Immigration and Naturalization Service would make preliminary findings [relating to CBAs] that are nowhere in the law delegated to it and which the Congress deemed to be within the Labor Department's own authority." INS expressed the same view as the Congressmen regarding the structure and intent of the statute. INS asserted that, under its own analysis of IMMACT, INS is authorized to enforce only one provision regarding CBAs: the requirement that, where a CBA exists covering more than 30 percent of the longshore workers in the port, an employer can use alien crewmembers to perform longshore work only if that CBA expressly permits such longshore work to be done by such aliens. In the view of INS, the assertion and determination of the absence of a CBA covering 30 percent of a port's longshore workers must be an integral part of the attestation process, to be enforced by DOL through the investigation, hearing, and penalty procedures established by Congress for the prevailing practice exception. A labor organization also expressed the same position as the Congressmen and INS. Upon careful consideration of these comments, as well as a review of relevant legal authorities regarding the enforcement of statutory preconditions (*e.g., Fedorenko* v. *United States,* 449 U.S. 490 (1981)), DOL has concluded that the employer's attestation must include affirmation that no CBA exists which covers 30 percent or more of the longshore workers in a port, that the employer shall have the burden of proving this element of the attestation (as with all elements), and that misrepresentation of this attestation element shall carry the same sanctions applicable to other violations under attestations. § _____.510(c) of these regulations has been revised to reflect these requirements.

2. Ports for Which Attestations may be Filed

Because the Department has received so many inquiries regarding its definition of a port, the final rule clarifies the circumstances under which remote locations can be determined to be ports for the purposes of this program. Under the final rule, an employer may file an attestation for any port which is listed in appendix A (U.S. Seaports) to subpart F of these regulations. An employer may also file an attestation for a location that is not in appendix A if it also submits with its attestation additional facts and evidence to demonstrate that this location meets all the criteria to qualify

as a port as defined in § _____.502 of this rule, *i.e.* the location is on a seacoast, lake, river or any other navigable body of water, contains one or more publicly or privately owned terminals, piers, docks, or maritime facilities (a floating processor may be a maritime facility), and is commonly thought of as a port by other government maritime-related agencies. Attestations filed for such locations that, on investigation, are determined not to be a port shall be subject to enforcement proceedings and sanctions as with other attestation elements. Use of alien crewmembers to perform longshore functions in remote locations in U.S. waters that do not qualify as ports is not allowed under the statute's prevailing practice exception. § _____.510(c) of these regulations has been revised to reflect this clarification.

3. Effect of Reciprocity on Prevailing Practice

This final rule addresses an issue which arose under the interim final rule, where foreign crewmembers performing longshore work on a vessel operating under the "reciprocity exception" no longer qualify for that exception and then, in order to continue to use foreign crewmembers to perform longshore work in a particular U.S. port, their employer files an attestation asserting that it is the prevailing practice to do so in that port.

The Secretary of State annually compiles and publishes a "non-reciprocity" list identifying countries where particular longshore activities by crewmembers aboard U.S. vessels are prohibited by law, regulation, or practice. 8 U.S.C. 1288(d)(2); see 22 CFR part 89, 57 FR 1384 (January 14, 1992), and 56 FR 66970 (December 27, 1991). Under the "reciprocity exception," the Attorney General will permit foreign crewmembers to perform longshore activities in U.S. ports if their vessel is registered in, and a majority ownership interest in the vessel is held by nationals of, a country that is not on the Secretary of State's non-reciprocity list.

In the first several months of operation under the interim final rule, the Department encountered troublesome circumstances where a country has been placed on the non-reciprocity list (thereby being removed from the reciprocity exception), and thereafter sought to use the prevailing practice exception to continue to perform longshore activities by filing attestations. Effective in January 1992, the Secretary of State added a number of countries, including Japan and Germany, to the non-reciprocity list (22 CFR 89.1, 57 FR 1384 (January 14, 1992), and 56 FR 66970 (December 27, 1991)). Since that date, foreign crewmembers on vessels from those countries are prohibited from performing longshore work in U.S. waters, absent the applicability of some exception, other than reciprocity, authorized in the Act. As a result, a number of Japanese employers who assert that they have used foreign crewmembers to perform longshore work in Alaskan waters have filed attestations asserting that it is the prevailing practice in these locations to permit foreign crewmembers to perform particular longshore activities. These attestations focused attention on the interface between Section 258's reciprocity and prevailing practice exceptions.

In addressing this issue, the Department gave careful consideration to the structure of the Act, its limited legislative history regarding these exceptions, and the potential practical consequences of various approaches that could be utilized. The Department recognizes that the reciprocity and prevailing practice exceptions are separate, self-contained provisions in section 258 of the Act, and that Congress contemplated no cross-reference or cross-effect between the two provisions. Congress enacted the prevailing practice exception to maintain the long-term *status quo* in U.S. ports. H.R. Rep. No. 101–723(I), 101st Cong., 2d Sess. (1990), *reprinted in* 1990 U.S.C.C.A.N. 6710, 6763. Thus, the prevailing practice exception rests on longshore activities as they actually happened in a particular port, rather than on the reasons or basis for the activities prior to enactment. However, another purpose of Section 258, embodied in the reciprocity exception, is to preserve jobs for U.S. longshore workers by prohibiting situations where foreign crewmembers' performance of longshore activities in U.S. ports reduces job opportunities for U.S. longshore workers absent commensurate opportunities for longshore work by U.S. crewmembers in the foreign vessel's home country. H.R. Rep. No. 101–280, 101st Cong., 1st Sess. (1989), page 7; see H.R. Rep. No. 101–723(I), 101st Cong., 2d Sess. (1990), page 83, and H.R. Rep. No. 101–955, 101st Cong., 2d Sess. (1990), page 125.

To reconcile these dual statutory purposes, the Department has clarified the regulation to provide that longshore work performed under the reciprocity exception may be considered or "counted" by employers seeking to demonstrate a prevailing practice for the use of foreign crewmembers in a particular port (so as to file prevailing practice attestations for the port), except that special requirements are established for employers from countries that have been placed on the Secretary of State's non-reciprocity list and thus removed from the reciprocity exception.

For an employer whose country is added to the non-reciprocity list, the final rule provides several options for filing attestations under the prevailing practice exception. The employer may simply wait for at least 12 months from the date of his country's placement on the non-reciprocity list. During this 12-month period, the employer could not use alien crewmembers to perform longshore work under the prevailing practice exception in any U.S. port, but at the end of this period, the employer may file a prevailing practice attestation, like any other employer, for the port where he seeks to use his alien crewmembers to do longshore work. If the employer does not want to wait 12 months to file an attestation under the general rules, he may file an attestation immediately after his country's placement on the non-reciprocity list but he will be subject to particular rules regarding the period of time for which he must make his showing as to the prevailing practice in the U.S. port at issue. The prevailing practice showing may be for the 12-month period preceding the date of the attestation (as the period would be for an ordinary attestation); however, the employer choosing this option cannot consider or "count" any of the longshore activities performed by crewmembers on vessels from the employer's country. If the employer wants to file an immediate attestation and wants to "count" the longshore activities performed by crewmembers on vessels from his country, the period on which the prevailing practice showing must be based is either the 12-month period immediately preceding the effective date of section 258 of the INA (May 28, 1991), or the most recent continuous 12-month period in which the employer was not entitled to the reciprocity exception, whichever is later.

The following example illustrates the operation of these clarifications in the rule. An employer from Country X has been using foreign crewmembers to perform longshore work in U.S. Port Y pursuant to the reciprocity exception since May 28, 1991, when the reciprocity exception became effective. Then, on January 3, 1993, the Secretary of State adds Country X to the non-reciprocity list; the employer from Country X can no longer use the reciprocity exception. Employers from countries other than Country X, who file prevailing practice

attestations for Port Y, may continue to "count" the longshore activities performed by crewmembers on Country X vessels. The employer from Country X can dock in Port Y and use U.S. workers, rather than its own crewmembers, to perform longshore work. However, if the employer from Country X wants to continue to use its crewmembers to perform longshore work in Port Y, the employer has the following options regarding the filing of a prevailing practice attestation for Port Y. First, the employer from Country X may wait until after January 3, 1994 (12 months from the time Country X was put on the non-reciprocity list), and then file an attestation subject to the requirements for any other employer. Second, the employer may immediately file an attestation that it was the prevailing practice to use foreign crewmembers to do longshore work at Port Y during the 12-month period immediately preceding the date of its attestation, but in determining the prevailing practice, the employer must exclude (not "count") any longshore work performed by any foreign crewmembers on any Country X vessels. Finally, the employer from Country X may immediately file a prevailing practice attestation for Port Y, and in establishing the prevailing practice may "count" longshore activities performed by Country X crewmembers; however, the prevailing practice determination is based on the 12-month period from May 28, 1990, to May 28, 1991. (In the event that Country X has been removed from the reciprocity exception more than once (due to changes in Country X laws regarding longshore work by U.S. crewmembers), the 12-month period for which prevailing practice must be established would be the period immediately preceding the date on which Country X was last taken off the non-reciprocity list).

4. Counting of Workers for Prevailing Practice Purposes

The provision in § _____.510(d)(1) regarding determination of the percentage of workers in a port which have been performing a particular longshore activity in order to establish a prevailing practice has been amended to clarify that "workers in the port who engaged in the activity" means any person who performed a particular longshore activity in any calendar day.

5. Counting of Vessels for Prevailing Practice Purposes

The provision in § _____.510(d)(1) regarding the counting of vessels in establishing prevailing practice has been amended to clarify that vessels which are exempt under Section 258(b)(1) of the Act for safety and environmental protection will not be included in any manner.

6. Two Sets of Accompanying Documentation Required

Under § _____.510(c) of the interim final rule, employers were required to submit three copies of Form ETA 9033, but only one copy of the accompanying documentation. By law, however, ETA is to "make available for public examination in Washington, DC a list of employers which have filed attestations, and for each such employer, *a copy of the employer's attestation and accompanying documentation* * * *" (emphasis added).

Since attestations are filed with the regional offices but the law requires availability for public examination at the National Office, the Department originally intended to keep the attestation and documentation only in the National Office. This has proven to be impractical since the National Office is not able to respond quickly to inquiries regarding attestations that are filed in the field. These responses can be better handled by the regions. The Department is therefore requiring that attesting employers submit two sets of supporting documentation—one to be retained by the regional office where the attestation is filed, and one to be kept on file in the National Office for public examination purposes.

7. Regional Offices Processing Attestations

The interim final rule provides at § _____.510(b)(1) that attestations shall be submitted to the "U.S. Department of Labor ETA Regional Offices(s) which are designated by the Chief, Division of Foreign Labor Certifications * * *" The preamble to the interim final rule stated in Section III.A. When and Where to File, that attestations will be submitted to the Chicago and Dallas Regional Offices because it was "anticipated that employers using ports in the Great Lakes and the Gulf of Mexico will utilize alien crewmembers * * *" Accordingly, the instructions for completing Form ETA 9033 directed employers to file attestations pertaining to ports on the West Coast and the Gulf of Mexico with the Dallas Regional Office and attestations pertaining to ports on the East Coast and the Great Lakes with the Chicago Regional Office.

After one year of operational experience, the Department has decided to expand the processing of crew member attestations to two more of its regional offices: The Boston and Seattle Regional Offices. Attestations pertaining to all ports on the Atlantic Coast, Puerto Rico, and in the Virgin Islands will now be processed by the Boston Regional Office instead of the Chicago Regional Office. The Chicago Regional Office will continue to process attestations pertaining to all ports on the Great Lakes. Attestations pertaining to all ports on the Pacific Coast, Alaska, Hawaii, and Guam will now be processed by the Seattle Regional Office instead of the Dallas Regional Office. The Dallas Regional Office will continue to process attestations pertaining to all ports on the Gulf of Mexico. The instructions for completing Form ETA 9033 have been modified accordingly.

8. Ports Added to List

Two commenters submitted lists of ports which were inadvertently omitted from the list published with the interim final rule. The following ports have now been added to the list:

South Atlantic Range

Southport, NC
Riviera, FL
Cocoa, FL
Ft. Lauderdale, FL
Ceiba, PR
Vieques, PR
St. Mary, GA

North Pacific Range

Klawock/Craig, AK
Pelican, AK
Bandon, OR
Mapleton, OR
Toledo, OR
Columbia City, OR
Port Gamble, WA

Great Lakes Range

Cincinnati, OH

Gulf Coast Range

Gretna, LA
Harbor Island, TX
Port Isabel, TX

C. Changes Considered But Not Made

Several issues raised by commenters were carefully considered for possible changes to the interim final rule, but, after thoughtful deliberation, the final rule was left unchanged with respect to these issues.

1. Definition of "Port"

The proposed rule originally defined a "port" as "a place * * * where ships * * * stop for the purpose of loading and unloading cargo." Labor organization commenters urged a change to clarify that a "port" refers to a conglomeration of terminals, to preclude the designation of an individual terminal or dock as a "port." In drafting the proposed rule, the Department did not intend that a "port" could be construed to be a dock, pier, terminal or other such "place," but that

it encompass the commonly held view that a port is comprised of an area where many docking places are concentrated. Several commenters from the shipping industry, on the other hand, strongly supported the port definition contained in the proposed rule, interpreting the definition to mean a "dock," "pier," "terminal," or other "place," and in their comments urged that the port definition explicitly permit an individual dock or terminal to be considered a port. Based on its research of this issue, DOL believes that the commonly held view of a port as a conglomeration of docking facilities in an area to be the most reflective of Congressional intent. Moreover, various government agencies, including the U.S. Coast Guard, U.S. Army Corps of Engineers, and the Maritime Administration's Office of Port and Intermodal Development, likewise utilize a definition that supports this "conglomeration" definition. Finally, the legislation itself uses the phrase "in and about the local port," which implies a definition broader than an individual dock or terminal. In response to these comments, the interim final rule clarified the definition of a "port" to be "a geographic area, either on a seacoast, lake, river or any other navigable body of water, which contains one or more publicly or privately owned terminals, piers, docks, or maritime facilities, which is commonly thought of as a port by other government maritime-related agencies, such as the Maritime Administration. U.S. ports include, but are not limited to, those listed in appendix A to this subpart." The final rule has retained the definition used in the interim final rule.

2. Period of Time Necessary to Establish a Prevailing Practice

One commenter stated that 12 months is an inadequate period of time to establish a prevailing practice. The INA, at section 258(c)(1)(B)(i), provides that an attestation may be filed where "the performance of the activity by alien crewmen is permitted under the prevailing practice of the particular port as of the date of filing of the attestation." The Conference Report (H.R. Rep. No. 101-955), at page 125, states that a prevailing practice is one which "has long been accepted by all local interests concerned." Thus, Congress contemplated that a prevailing practice would have to be based on conditions which existed for some "long" period of time prior to the filing of an attestation.

In the regulations, the Department has sought to give meaning to this language by requiring that the period of time necessary to establish a prevailing practice be one year. In establishing this requirement, the Department looked to the reciprocity exception in section 258(d)(3) of the INA, where the term "in practice" is defined as "an activity normally performed * * * during the one-year period preceding the arrival of such vessel into the United States * * *." The Department reasoned that consistency indicated use of the same time period to establish a prevailing practice in the U.S. as was required to establish a practice in other countries.

Although ultimately adopting one year as the appropriate period to establish a prevailing practice under section 258(c) of the INA, the Department seriously considered a longer time period. The proposed rule discussed two alternatives that the Department was considering. One option would have defined "prevailing" based on length of time—*e.g.*, two to three years—allowing the continuance of any longshore activity using alien crewmembers that had occurred during that period. The other option, which was adopted in the interim final rule, defines "prevailing" in terms of the "majority" of a longshore activity—*i.e.*, over 50 percent—within a port which must have been performed by alien crewmembers over the one year period preceding the arrival of the vessel into the U.S. Requiring a period longer than one year to establish a prevailing practice would make attestations too difficult to substantiate.

As of May 28, 1991, the day INA section 258 and the crewmember regulations became effective, alien crewmembers could no longer legally perform longshore work in U.S. ports except under one of the exceptions provided in the statute. Under the prevailing practice exception, as of that date, a prevailing practice of using aliens to perform longshore work must have already existed in the port for one year. Such practice would therefore have continued until the time an attestation is filed.

3. Percentage Threshold for Establishing "Prevailing Practice"

Two commenters suggested that the percentage necessary for establishing "prevailing practice" should be lowered from 50 percent to 30 percent because 30 percent equates to the requirement regarding coverage by a collective bargaining agreement. Two other commenters endorsed the 50 percent standard as consistent with the concept of "prevailing."

DOL recognizes the shipping industry's concerns, but believes the concept of "prevailing" requires that the standard be no lower than a simple majority. Accordingly, this provision was unchanged in the interim final rule and this final rule.

4. Crewmember Prevailing Practice Distinguishable From Farmworker Prevailing Practice

In response to a comment, it is appropriate to distinguish the standard for determining prevailing practice for the use of alien crewmembers in longshore work from that used with respect to certain employer-provided benefits to nonimmigrant alien farmworkers and similarly employed U.S. workers under the H-2A program. See 20 CFR part 655, subparts B, F, and G, and 29 CFR part 506, 56 FR 24648 (May 30, 1991). In the proposed rule on crewmembers, the Department stated that the prevailing practice standard it would use for the program was consistent with other immigration programs of the Department "which use the concept of a simple majority" (56 FR 16031, 16033 (April 19, 1991)). That statement needs to be clarified, since it is not consistent with those immigration programs which do not use a simple majority, such as the H-2A program.

In the crewmember regulations, the Department accepts longshore work by alien crewmembers as prevailing in a port if:

(1) The majority of vessels used alien crewmembers for longshore work; or
(2) Over 50 percent of the workers in the port performing such work are aliens.

20 CFR 655.510(d)(1) and 29 CFR 506.510(d)(1), 56 FR 24648, 24657 (May 30, 1991).

Under the temporary alien agricultural labor certification (H-2A) regulations governing the employment of nonimmigrant alien farmworkers and any U.S. co-workers, the Department requires covered employers to: offer family housing and transportation advances; pay more frequently than semi-monthly; and utilize (and override payments to) farm labor contractors, if that is a prevailing practice. The reference groups for determination of prevailing practice are employers of workers in that occupation: In the area of intended employment for family housing and frequency of pay, or such employers who do not use alien farmworkers for transportation advances and various factors involving the use of farm labor contractors.

20 CFR 655.102(b)(1)(vi), (b)(5)(i), and (b)(10), 655.102(d), and 655.103(f). Determinations of prevailing practice under the H-2A program are made based on a standard of a majority of employers and a majority of workers,

e.g., a "double majority" standard (Employment and Training Administration Handbook No. 398 at II–6 and II–7; see also 56 FR 5670 (February 12, 1991)).

A commenter on the H–2A regulations has questioned the distinction and asked whether the crewmember regulations will affect the H–2A regulations (see 56 FR 5670 (February 12, 1991)). In the Department's view, the unique nature of each of these two types of employment requires a standard reflective of the nature of the industry.

Specifically, the Department could have taken two courses under the crewmember regulations. The legislative history of the crewmember program references "well-established" prevailing practices "long * * * accepted by all local interests concerned * * *" (H.R. Conf. Rep. No. 101–955 at 124 and 125). The "all local interests concerned" language has been argued by some to support a double-majority test, as in the H–2A regulations. On the other hand, some have argued that the language in the INA stating that the measure for longshore prevailing practice is the permitting of alien crewmembers to do this work rather than the actual performance of the work by alien crewmembers, implies a somewhat looser standard in determining prevailing practice for crewmember longshore work (see 8 U.S.C. 1288(c)(1)(B)(i)).

In response to the proposed crewmember rule, some commenters sought a prevailing practice standard less than single majority. While the Department modified the methodology slightly in the interim final rule, by eliminating measurement of tonnage in the port worked on by alien workers, the Department did not effect a less-than-single-majority standard for the crewmember program, stating its desire to be consistent with other immigration programs (56 FR at 24650).

As in many rulemaking actions, the Department received comments on the crewmember rulemaking from various interests with opposing views. In this rulemaking, as in its H–2A rulemaking, the Department took into consideration the comments as well as the unique nature of the employment. For example, in the H–2A program, the number of employers using farmworkers in an area of intended employment and the number of farmworkers employed are generally relatively stable from year-to-year. To avoid having the practice of a number of small employer, or the practice of a small number of large employers, determine prevailing practice in an area, the Department determined that it would be fairer under the farmworker program to require a double majority of both workers and employers as the standard for establishing a prevailing practice.

In the crewmember program, however, the variations in workforce size of affected employers is not as great as in agriculture, and application of a double majority standard is not necessary to provide prevailing practice protection to U.S. workers. The Department's experience is that in a labor market area where H–2A farmworkers are employed, there may be as many as 70 or more agricultural workers on some farms and as few as 5 or fewer agricultural workers on others, all engaged in the same crop activity, such as picking apples.

By contrast, the Department's experience is that the workforce per-employer in the crewmember program varies much less. For example, it is fairly standard that refrigerator vessels carrying processed fish in Alaska have crews of 15–20 doing longshore work. Other area employers, such as barge operators employ 5–7 workers, and fish processors use a fraction or their crews for longshore work. Thus, it is not necessary, and would be unduly burdensome administratively, for employers to have to attest to a double majority prevailing practice in the crewmember program.

Further, while U.S. longshore workers are, to a large extent, based in one location, alien crewmembers performing longshore work are a mobile workforce, as is true for many farmworkers under the H–2A program. In contrast to the H–2A program, however, and unlike most of the other immigration programs with which the Department is involved, the crewmember program also involves mobile employers. The same employers are not necessarily in a port on a repetitive, continuous, seasonal, or even annual basis. As such, the Department determined that the double majority approach was not necessary, too administratively burdensome, and inappropriate for the crewmember program.

5. Clarification of Hazardous Cargo Exception

Four commenters requested clarification regarding how to determine which vessels carrying hazardous cargo will be excepted from the requirement to file an attestation. Since this issue does not fall within DOL's jurisdiction, interested parties should seek such clarification from the Department of Transportation, which is the agency responsible for making such determinations.

6. Changing the 14-Day Filing Requirement

Three commenters sought to reduce or eliminate the 14-day filing requirement, because it is incompatible with last-minute changes in shipping schedules. DOL has no flexibility in interpreting this requirement because the statute explicitly sets forth a 14-day advance filing requirement.

7. Enforcement Issues

One commenter suggested that the Department should provide advance notice to an employer before initiating an investigation. Wage and Hour investigators coordinate and organize their activities in a manner that takes into consideration the employer's business activities. Employers will generally be contacted in advance of the investigator's appearance at the employer's place of business to inspect records and interview personnel. However, prior notification is not always appropriate, therefore, the Department has not changed the final rule in this respect.

One commenter requested that the regulations be changed to protect employers from frivolous complaints and afford sufficient opportunity to defend against a complainant's allegations. The INA requires that, before initiating an investigation, the Department will make a determination that there is "reasonable cause" to conduct an investigation, thereby assuring that an investigation will not be initiated based on a frivolous allegation. Therefore, the Department has determined that the final rule need not be changed in this respect.

One commenter suggested that the Equal Access to Justice Act (EAJA) should be applicable to administrative proceedings under this program. The Department has concluded, based on the case law and authorities, that the EAJA is not applicable because the statute does not mandate a hearing on the record within the meaning of the Administrative Procedures Act (5 U.S.C. 504; 5 U.S.C. 554; *e.g.*, *St. Louis Fuel and Supply Co., Inc.* v. *FERC*, 890 F.2d 446 (D.C. Cir. 1989); *Smedberg Machine & Tool, Inc.* v. *Donovan*, 730 F.2d 1089 (7th Cir. 1984)).

Regulatory Impact and Administrative Procedure

E.O. 12291

The rule does not have the financial or other impact to make it a major rule and, therefore, the preparation of a regulatory impact analysis is not necessary. See Executive Order 12291, 3

CFR, 1981 Comp., Page 127, 5 U.S.C. 601 note.

Regulatory Flexibility Act

The Department of Labor has notified the Chief Counsel of Advocacy, Small Business Administration, and made the certification pursuant to the Regulatory Flexibility Act at 5 U.S.C. 605(b), that the rule does not have a significant economic impact on a substantial number of small entities.

Nevertheless, interested parties are requested to submit, as part of their comments on this rule, information on the potential economic impact of the rule.

Effective Date

The final rule promulgated in this document is effective on October 8, 1992. Since the interim final rule published at 56 FR 24648 (May 30, 1991) is effective only through September 8, 1992, it is necessary to extend the interim final rule until the final rule becomes effective. To do otherwise would preclude employers, during the hiatus, from using alien crewmembers for longshore work, and thus, would be impracticable and contrary to the public interest.

Catalog of Federal Domestic Assistance Number: This program is not yet listed in the *Catalog of Federal Domestic Assistance.*

List of Subjects

20 CFR Part 655

Administrative practice and procedure, Agriculture, Aliens, Crewmembers, Employment, Enforcement, Forest and Forest Products, Guam, Health professions, Immigration, Labor, Longshore work, Migrant labor, Nurse, Penalties, Registered nurse, Reporting and recordkeeping requirements, Specialty occupation, Students, Wages.

29 CFR Part 506

Administrative practice and procedures, Aliens, Crewmembers, Employment, Enforcement, Immigration, Labor, Longshore work, Penalties, Reporting and recordkeeping requirements.

Text of the Final Joint Rule

The text of the joint final rule as adopted by ETA and the Wage and Hour Division, ESA, and in this document appears below:

Subpart F—Attestations by Employers Using Alien Crewmembers for Longshore Activities in U.S. Ports

Sec.

_____.500 Purpose, procedure and applicability of subparts F and G of this part.
_____.501 Overview of responsibilities.
_____.502 Definitions.
_____.510 Employer attestations.
_____.520 Special provisions regarding automated vessels.
_____.550 Public access.
Appendix A to Subpart F—U.S. Seaports

Subpart G—Enforcement of the Limitations Imposed on Employers Using Alien Crewmembers for Longshore Activities in U.S. Ports

Sec.

_____.600 Enforcement authority of Administrator, Wage and Hour Division.
_____.605 Complaints and investigative procedures.
_____.610 Automated vessel exception to prohibition on utilization of alien crewmember(s) to perform longshore activity(ies) at a U.S. port.
_____.615 Cease and desist order.
_____.620 Civil money penalties and other remedies.
_____.625 Written notice, service and **Federal Register** publication of Administrator's determination.
_____.630 Request for hearing.
_____.635 Rules of practice for administrative law judge proceedings.
_____.640 Service and computation of time.
_____.645 Administrative law judge proceedings.
_____.650 Decision and order of administrative law judge.
_____.655 Secretary's review of administrative law judge's decision.
_____.660 Administrative record.
_____.665 Notice to the Attorney General and the Employment and Training Administration.
_____.670 **Federal Register** notice of determination of prevailing practice.
_____.675 Non-applicability of the Equal Access to Justice Act.

Subpart F—Attestations by Employers Using Alien Crewmembers for Longshore Activities in U.S. Ports

§ _____.500 Purpose, procedure and applicability of subparts F and G of this part.

(a) *Purpose.* (1) Section 258 of the Immigration and Nationality Act prohibits nonimmigrant alien crewmembers admitted to the United States on D-visas from performing longshore work at U.S. ports except in four specific instances:

(i) Where the vessel's country of registration does not prohibit U.S. crewmembers from performing longshore work in that country's port and nationals of a country (or countries) which does not prohibit U.S. crewmembers from performing longshore work in that country's port hold a majority of the ownership interest in the vessel, as determined by the Secretary of State;

(ii) Where there is in effect in a local port one or more collective bargaining agreement(s), each covering at least thirty percent of the longshore workers, and each permitting the activity to be performed under the terms of such agreement(s);

(iii) Where there is no collective bargaining agreement covering at least thirty percent of the longshore workers at the particular port and an attestation with accompanying documentation has been filed with the Department of Labor attesting that, among other things, the use of alien crewmembers to perform a particular activity of longshore work is permitted under the prevailing practice of the particular port (henceforth referred to as the "prevailing practice exception"); or

(iv) Where the longshore work involves an automated self-unloading conveyor belt or vacuum-actuated system on a vessel and the Administrator has not previously determined that an attestation must be filed pursuant to this part as a basis for performing those functions (henceforth referred to as the "automated vessel exception").

(2) The term "longshore work" does not include the loading or unloading of hazardous cargo, as determined by the Secretary of Transportation, for safety and environmental protection. The Department of Justice, through the Immigration and Naturalization Service (INS), determines whether an employer may use alien crewmembers for longshore work at U.S. ports. In those cases where an employer must file an attestation in order to perform such work, the Department of Labor shall be responsible for accepting the filing of such attestations. Subpart F of this part sets forth the procedure for filing attestations with the Department of Labor for employers proposing to use alien crewmembers for longshore work at U.S. ports under the prevailing practice exception and where it has been determined that an attestation is required under the automated vessel exception listed in paragraph (a)(4) of this section. Subpart G of this part sets forth complaint, investigation, and penalty provisions with respect to such attestations.

(b) *Procedure.* (1) Under the prevailing practice exception in sec. 258(c) of the Act, and in those cases where it has been determined that an attestation is required under the automated vessel exception, the procedure involves filing an attestation with the Department of Labor attesting that:

(i) The use of alien crewmembers for a particular activity of longshore work is the prevailing practice at the particular port;

(ii) The use of alien crewmembers is not during a strike or lockout nor designed to influence the election of a collective bargaining representative; and

(iii) Notice of the attestation has been provided to the bargaining representative of longshore workers in the local port, or, where there is none, notice has been provided to longshore workers employed at the local port.

(2) Under the automated vessel exception in sec. 258(c) of the Act, no attestation is required in cases where longshore activity consists of the use of an automated self-unloading conveyor belt or vacuum-actuated system on a vessel. The legislation creates a rebuttable presumption that the use of alien crewmembers for the operation of such automated systems is the prevailing practice. In order to overcome such presumption, it must be shown by the preponderance of the evidence submitted by any interested party, that the use of alien crewmembers for such activity is not the prevailing practice at the particular port, that it is during a strike or lockout, or that it is intended or designed to influence an election of a bargaining representative for workers in the local port.

(c) *Applicability.* Subparts F and G of this part apply to all employers who seek to employ alien crewmembers for longshore work at U.S. ports under the prevailing practice exception, to all employers claiming the automated vessel exception, and to those cases where it has been determined that an attestation is required under the automated vessel exception.

§ _____.501 Overview of responsibilities.

This section provides a context for the attestation process, to facilitate understanding by employers that may seek to employ alien crewmembers for longshore work under the prevailing practice exception and in those cases where an attestation is necessary under the automated vessel exception.

(a) *Department of Labor's responsibilities.* The United States Department of Labor (DOL) administers the attestation process. Within DOL, the Employment and Training Administration (ETA) shall have responsibility for setting up and operating the attestation process; the Employment Standards Administration's Wage and Hour Division shall be responsible for investigating and resolving any complaints filed concerning such attestations.

(b) *Employer attestation responsibilities.* Each employer seeking to use alien crewmembers for longshore work at a local U.S. port pursuant to the prevailing practice exception, or where an attestation is required under the automated vessel exception shall, as the first step, submit an attestation on Form ETA 9033, as described in § _____.510 of this part, to ETA at the address set forth at § _____.510(b) of this part. If ETA accepts the attestation for filing, pursuant to § _____.510 of this part, ETA shall return the cover form of the accepted attestation to the employer, and, at the same time, shall notify the Immigration and Naturalization Service (INS) of the filing.

(c) *Complaints.* Complaints concerning misrepresentation in the attestation, failure of the employer to carry out the terms of the attestation, or complaints that an employer is required to file an attestation under the automated vessel exception, may be filed with the Wage and Hour Division, according to the procedures set forth in subpart G of this part. Complaints of "misrepresentation" may include assertions that an employer has attested to the use of alien crewmembers only for a particular activity of longshore work and has thereafter used such alien crewmembers for another activity of longshore work. If the Division determines that the complaint presents reasonable cause to warrant an investigation, the Division shall then investigate, and, where appropriate, after an opportunity for a hearing, assess sanctions and penalties. Subpart G of this part further provides that interested parties may obtain an administrative law judge hearing on the Division's determination after an investigation and may seek the Secretary's review of the administrative law judge's decision. Subpart G of this part also provides that a complainant may request that the Wage and Hour Administrator issue a cease and desist order in the case of either alleged violation(s) of an attestation or longshore work by alien crewmember(s) employed by an employer allegedly not qualified for the claimed automated vessel exception. Upon the receipt of such a request, the Division shall notify the employer, provide an opportunity for a response and an informal meeting, and then rule on the request, which shall be granted if the preponderance of the evidence submitted supports the complainant's position.

§ _____.502 Definitions.

For the purposes of subparts F and G of this part: *Accepted for filing* means that a properly completed attestation including accompanying documentation for each of the requirements in § _____.510 (d) through (f) of this part submitted by the employer or its designated agent or representative has been received and filed by the Employment and Training Administration of the Department of Labor (DOL). (Unacceptable attestations are described at § _____.510(g)(2) of this part.)

Act and *INA* mean the Immigration and Nationality Act, as amended, 8 U.S.C. 1101 *et seq.*

Activity means any activity relating to loading cargo; unloading cargo; operation of cargo-related equipment; or handling of mooring lines on the dock when a vessel is made fast or let go.

Administrative law judge means an official appointed pursuant to 5 U.S.C. 3105.

Administrator means the Administrator of the Wage and Hour Division, Employment Standards Administration, Department of Labor, or such authorized representatives as may be designated to perform any of the functions of the Administrator under subparts F and G of this part.

Attestation means documents submitted by an employer attesting to and providing accompanying documentation to show that the use of alien crewmembers for a particular activity of longshore work at a particular U.S. port is the prevailing practice, and is not during a strike or lockout nor intended to influence an election of a bargaining representative for workers; and that notice of the attestation has been provided to the bargaining representative, or, where there is none, to the longshore workers at the local port.

Attesting employer means an employer who has filed an attestation.

Attorney General means the chief official of the U.S. Department of Justice or the Attorney General's designee.

Automated vessel means a vessel equipped with an automated self-unloading conveyor belt or vacuum-actuated system which is utilized for loading or unloading cargo between the vessel and the dock.

Certifying Officer means a Department of Labor official who makes determinations about whether or not to accept attestations:

(1) A regional Certifying Officer designated by a Regional Administrator, Employment and Training Administration (RA) makes such determinations in a regional office of the Department;

(2) A national Certifying Officer makes such determinations in the national office of the USES.

Chief, Division of Foreign Labor Certifications, USES means the chief official of the Division of Foreign Labor Certifications within the United States

Employment Service, Employment and Training Administration, Department of Labor, or the designee of the Chief, Division of Foreign Labor Certifications, USES.

Chief Administrative Law Judge means the chief official of the Office of the Administrative Law Judges of the Department of Labor or the Chief Administrative Law Judge's designee.

Crewmember means any nonimmigrant alien admitted to the United States to perform services under sec. 101(a)(15)(D)(i) of the Act (8 U.S.C. 1101(a)(15)(D)(i)).

Date of filing means the date an attestation is *accepted for filing* by ETA.

Department and *DOL* mean the United States Department of Labor.

Director means the chief official of the United States Employment Service (USES), Employment and Training Administration, Department of Labor, or the Director's designee.

Division means the Wage and Hour Division of the Employment Standards Administration, DOL.

Employer means a person, firm, corporation, or other association or organization, which suffers or permits, or proposes to suffer or permit, alien crewmembers to perform longshore work at a port within the U.S.

Employment and Training Administration (ETA) means the agency within the Department of Labor (DOL) which includes the United States Employment Service (USES).

Employment Standards Administration (ESA) means the agency within the Department of Labor (DOL) which includes the Wage and Hour Division.

Immigration and Naturalization Service (INS) means the component of the Department of Justice which makes the determination under the Act on whether an employer of alien crewmembers may use such crewmembers for longshore work at a U.S. port.

Lockout means a labor dispute involving a work stoppage, wherein an employer withholds work from its employees in order to gain a concession from them.

Longshore work means any activity (except safety and environmental protection work as described in sec. 258(b)(2) of the Act) relating to the loading or unloading of cargo, the operation of cargo related equipment (whether or not integral to the vessel), or the handling of mooring lines on the dock when the vessel is made fast or let go, in the United States or the coastal waters thereof.

Longshore worker means a U.S. worker who performs longshore work.

Port means a geographic area, either on a seacoast, lake, river or any other navigable body of water, which contains one or more publicly or privately owned terminals, piers, docks, or maritime facilities, which is commonly thought of as a port by other government maritime-related agencies, such as the Maritime Administration. U.S. ports include, but are not limited to, those listed in Appendix A to this subpart.

Regional Administrator, Employment and Training Administration (RA) means the chief official of the Employment and Training Administration (ETA) in a Department of Labor (DOL) regional office.

Secretary means the Secretary of Labor or the Secretary's designee.

Strike means a labor dispute wherein employees engage in a concerted stoppage of work (including stoppage by reason of the expiration of a collective-bargaining agreement) or engage in any concerted slowdown or other concerted interruption of operations.

Unanticipated emergency means an unexpected and unavoidable situation, such as one involving severe weather conditions, natural disaster, or mechanical breakdown, where cargo must be immediately loaded on, or unloaded from, a vessel.

United States is defined at 8 U.S.C. 1101(a)(38).

United States Employment Service (USES) means the agency of the Department of Labor, established under the Wagner-Peyser Act, which is charged with administering the national system of public employment offices.

United States (U.S.) worker means a worker who is a U.S. citizen, a U.S. national, a permanent resident alien, or any other worker legally permitted to work indefinitely in the United States.

§ _____.510 Employer attestations.

(a) *Who may submit attestations?* An employer (or the employer's designated U.S. agent or representative) seeking to employ alien crewmembers for a particular activity of longshore work under the prevailing practice exception shall submit an attestation, provided there is not in effect in the local port any collective bargaining agreement covering at least 30 percent of the longshore workers. An attestation is required for each port at which the employer intends to use alien crewmembers for longshore work. The attestation shall include: a completed Form ETA 9033, which shall be signed by the employer (or the employer's designated agent or representative); and facts and evidence prescribed in paragraphs (d) through (f) of this section.

(b) *Where and when should attestations be submitted?* (1) Attestations must be submitted, by U.S. mail, private carrier, or facsimile transmission to the U.S. Department of Labor ETA Regional Office(s) which are designated by the Chief, Division of Foreign Labor Certifications, USES. Attestations must be received and date-stamped by DOL at least 14 calendar days prior to the date of the first performance of the intended longshore activity, and shall be accepted for filing or returned by ETA in accordance with paragraph (g) of this section within 14 calendar days of the date received by ETA. An attestation which is accepted by ETA solely because it was not reviewed within 14 days is subject to subsequent invalidation pursuant to paragraph (i) of this section. Every employer filing an attestation shall have an agent or representative with a United States address. Such address shall be clearly indicated on the Form ETA 9033. In order to ensure that an attestation has been accepted for filing prior to the date of the performance of the longshore activity, employers are advised to take mailing time into account to make sure that ETA receives the attestation at least 14 days prior to the first performance of the longshore activity.

(2) *Unanticipated Emergencies.* ETA may accept for filing attestations received after the 14-day deadline when due to an unanticipated emergency, as defined in § _____.502 of this part. When an employer is claiming an unanticipated emergency, it shall submit documentation to support such a claim. ETA shall then make a determination on the validity of the claim, and shall accept the attestation for filing or return it in accordance with paragraph (g) of this section. ETA shall in no case accept an attestation received later than the date of the first performance of the activity.

(c) *What should be submitted?* (1) *Form ETA 9033 with accompanying documentation.* For each port, a completed and dated original Form ETA 9033, or facsimile transmission thereof, containing the required attestation elements and the original signature of the employer (or the employer's designated agent or representative) shall be submitted, along with two copies of the completed, signed, and dated Form ETA 9033. (If the attestation is submitted by facsimile transmission, the attestation containing the original signature shall be maintained at the U.S. business address of the employer's designated agent or representative). Copies of Form ETA 9033 are available at all Department of Labor ETA

Regional Offices and at the National Office. In addition, the employer shall submit two sets of all facts and evidence to show compliance with each of the attestation elements as prescribed by the regulatory standards in paragraphs (d) through (f) of this section. In the case of an investigation pursuant to subpart G of this part, the employer shall have the burden of proof to establish the validity of each attestation. The employer shall maintain in its records at the office of its U.S. agent, for a period of at least 3 years from the date of filing, sufficient documentation to meet its burden of proof and shall make the documents available to Department of Labor officials upon request. Whenever any document is submitted to a Federal agency or retained in the employer's records pursuant to this part, the document either shall be in the English language or shall be accompanied by a written translation into the English language certified by the translator as to the accuracy of the translation and his/her competency to translate.

(2) *Statutory precondition regarding collective bargaining agreements.* (i) The employer may file an attestation only when there is no collective bargaining agreement in effect in the port covering 30 percent or more of the longshore workers in the port. The employer shall attest on the Form ETA 9033 that no such collective bargaining agreement exists at the port at the time that the attestation is filed.

(ii) The employer is not required to submit with the Form ETA 9033 documentation substantiating that there is no collective bargaining agreement in effect in the port covering 30 percent or more of the longshore workers. If a complaint is filed which presents reasonable cause to believe that such an agreement exists, the Department shall conduct an investigation. In such an investigation, the employer shall have the burden of proving that no such collective bargaining agreement exists.

(3) *Ports for which attestations may be filed.* Employers may file an attestation for a port which is listed in appendix A (U.S. Seaports) to this subpart. Employers may also file an attestation for a particular location not in appendix A to this subpart if additional facts and evidence are submitted with the attestation to demonstrate that the location is a port, meeting all of the criteria as defined by § _____.502 of this part.

(4) *Attestation elements.* The attestation elements referenced in paragraph (c)(1) of this section are mandated by sec. 258(c)(1)(B) of the Act (8 U.S.C. 1288(c)(1)(B)). Section 258(c)(1)(B) of the Act requires employers who seek to have alien crewmembers engage in a longshore activity to attest as follows:

(i) The performance of the activity by alien crewmembers is permitted under the prevailing practice of the particular port as of the date of filing of the attestation;

(ii) The use of the alien crewmembers for such activity is not during a strike or lockout in the course of a labor dispute, and is not intended or designed to influence an election of a bargaining representative for workers in the local port; and

(iii) Notice of the attestation has been provided by the owner, agent, consignee, master, or commanding officer to the bargaining representative of longshore workers in the local port, or, where there is no such bargaining representative, notice has been provided to longshore workers employed at the local port.

(d) *The first attestation element: Prevailing practice.* For an employer to be in compliance with the first attestation element, it is required to have been the prevailing practice during the 12-month period preceding the filing of the attestation, for a particular activity of longshore work at the particular port to be performed by alien crewmembers. For each port, a prevailing practice can exist for any of four different types of longshore work: Loading of cargo, unloading of cargo, operation of cargo-related equipment, or handling of mooring lines. It is thus possible that at a particular port it is the prevailing practice for alien crewmembers to unload vessels but not the prevailing practice to load them. An employer shall indicate on the attestation form which of the four longshore activities it is claiming is the prevailing practice for such work to be performed by alien crewmembers.

(1) *Establishing a prevailing practice.*

(i) In establishing that a particular activity of longshore work is the prevailing practice at a particular port, an employer shall submit facts and evidence to show that in the 12-month period preceding the filing of the attestation, one of the following conditions existed:

(A) Over fifty percent of vessels docking at the port used alien crewmembers for the activity; or

(B) Alien crewmembers made up over fifty percent of the workers in the port who engaged in the activity.

(ii) *Prevailing practice after Secretary of State determination of non-reciprocity.* Section 258(d) of the Act provides a reciprocity exception (separate from the prevailing practice exception) to the prohibition on performance of longshore work by alien crewmembers in U.S. ports. However, this reciprocity exception becomes nonapplicable where the Secretary of State determines that, for a particular activity of longshore work, a particular country (by law, regulation, or practice) prohibits such activity by U.S. crewmembers in its ports. When the Secretary of State places a country on the non-reciprocity list (which means, for the purposes of this section, *Prohibitions on longshore work by U.S. nationals; listing by country* at 22 CFR 89.1), crewmembers on vessels from that country (that is, vessels that are registered in that country or vessels whose majority ownership interest is held by nationals of that country) are not permitted to perform longshore work in U.S. waters, absent applicability of some exception other than the reciprocity exception. The Secretary of State's determination has the following effects in the establishment of a prevailing practice for a particular longshore activity at a particular U.S. port for purposes of the prevailing practice exception.

(A) An employer from any country, *other than* the country which is placed on the non-reciprocity list, may include the longshore activities performed by alien crewmembers on all vessels in establishing the prevailing practice for a particular longshore activity in a particular port.

(B) An employer from a country which is placed on the non-reciprocity list may file an attestation for the prevailing practice exception under the standards and requirements established in this Subpart F (except as provided in (d)(1)(ii)(C) of this section), *provided that* the attestation is filed at least 12 months after the date on which the employer's country is placed on the list.

(C) An employer from a country which is placed on the non-reciprocity list may file an attestation pursuant to the prevailing practice exception earlier than 12 months from the date on which the employer's country is placed on the list, *except that* the following restrictions shall apply to such attestation:

(*1*) The employer shall submit facts and evidence to show that, for the 12-month period preceding the date of the attestation, the use of alien crewmembers to perform a particular activity of longshore work was permitted by the prevailing practice in the port (as defined in paragraph (d)(1)(i) of this section) without considering or including such activity by crewmembers on vessels from the employer's country; or

(2) The employer shall submit facts and evidence (including data on activities performed by crewmembers on vessels from the employer's country) to show that the use of alien crewmembers to perform a particular activity of longshore work was permitted by the prevailing practice in the port (as defined in paragraph (d)(1)(i) of this section) for one of two periods—

(i) For the employer whose country has not previously been on the non-reciprocity list, the period is the continuous 12-month period prior to May 28, 1991 (the effective date of Section 258 of the Act); or

(ii) For the employer whose country was at some time on the non-reciprocity list, but was subsequently removed from the non-reciprocity list and then restored to the non-reciprocity list (on one or more occasions), the period is the last continuous 12-month period during which the employer's country was not under the reciprocity exception (that is, was listed on the non-reciprocity list).

(iii) For purposes of this paragraph (d)(1) of this section:

(A) "Workers in the port engaged in the activity" means any person who performed the activity in any calendar day;

(B) Vessels shall be counted each time they dock at the particular port):

(C) Vessels exempt from section 258 of the INA for safety and environmental protection shall not be included in counting the number of vessels which dock at the port (see Department of Transportation Regulations); and

(D) Automated vessels shall not be included in counting the number of vessels which dock at the port. For establishing a prevailing practice under the automated vessel exception see § _____.520 of this subpart.

(2) *Documentation.* In assembling the facts and evidence required by paragraph (d)(1) of this section, the employer may consult with the port authority which has jurisdiction over the local port, the collective bargaining representative(s) of longshore workers at the local port, other employers, or any other entity which is familiar with the practices at the port. Such documentation shall include a written summary of a survey of the experience of shipmasters who entered the local port in the previous year; or a letter, affidavit, or other written statement from an appropriate local port authority regarding the use of alien crewmembers to perform the longshore activity at the port in the previous year; or other documentation of comparable weight. Written statements from collective bargaining representatives and/or shipping agents with direct knowledge of practices regarding the use of alien crewmembers in the local port may also be pertinent. Such documentation shall accompany the Form ETA 9033, and any underlying documentation which supports the employer's burden of proof shall be maintained in the employer's records at the office of the U.S. agent as required by paragraph (c)(1) of this section.

(e) *The second attestation element: no strike or lockout; no intention or design to influence bargaining representative election.* (1) The employer shall attest that, at the time of submitting the attestation, there is not a strike or lockout in the course of a labor dispute covering the employer's activity, and that it will not use alien crewmembers during a strike or lockout after filing the attestation. The employer shall also attest that the employment of such aliens is not intended or designed to influence an election for a bargaining representative for workers in the local port. Labor disputes for purposes of this attestation element relate only to those involving longshore workers at the port of intended employment. This attestation element applies to strikes and lockouts and elections of bargaining representatives at the local port where the use of alien crewmembers for longshore work is intended.

(2) *Documentation.* As documentation to substantiate the requirement in paragraph (e)(1) of this section, an employer may submit a statement of the good faith efforts made to determine whether there is a strike or lockout at the particular port, as, for example, by contacting the port authority or the collective bargaining representative for longshore workers at the particular port.

(f) *The third attestation element: notice of filing.* The employer of alien crewmembers shall attest that at the time of filing the attestation, notice of filing has been provided to the bargaining representative of the longshore workers in the local port, or, where there is no such bargaining representative, notice of the filing has been provided to longshore workers employed at the local port through posting in conspicuous locations and through other appropriate means.

(1) *Notification of bargaining representative.* No later than the date the attestation is received by DOL to be considered for filing, the employer of alien crewmembers shall notify the bargaining representative (if any) of longshore workers at the local port that the attestation is being submitted to DOL. The notice shall include a copy of the Form ETA 9033, shall state the activity(ies) for which the attestation is submitted, and shall state in that notice that the attestation and accompanying documentation are available at the national office of ETA for review by interested parties. The employer may have its owner, agent, consignee, master, or commanding officer provide such notice. Notices under this paragraph (f)(1) shall include the following statement: "Complaints alleging misrepresentation of material facts in the attestation and/or failure to comply with the terms of the attestation may be filed with any office of the Wage and Hour Division of the United States Department of Labor."

(2) *Posting notice where there is no bargaining representative.* If there is no bargaining representative of longshore workers at the local port when the employer submits an attestation to ETA, the employer shall provide written notice to the port authority for distribution to the public on request. In addition, the employer shall post one or more written notices at the local port, stating that the attestation with accompanying documentation has been submitted, the activity(ies) for which the attestation has been submitted, and that the attestation and accompanying documentation are available at the national office of ETA for review by interested parties. Such posted notice shall be clearly visible and unobstructed, and shall be posted in conspicuous places where the longshore workers readily can read the posted notice on the way to or from their duties. Appropriate locations for posting such notices include locations in the immediate proximity of mandatory Fair Labor Standards Act wage and hour notices and Occupational Safety and Health Act occupational safety and health notices. The notice shall include a copy of the Form ETA 9033 filed with DOL, shall provide information concerning the availability of supporting documents for examination at the national office of ETA, and shall include the following statement: "Complaints alleging misrepresentation of material facts in the attestation and/or failure to comply with the terms of the attestation may be filed with any office of the Wage and Hour Division of the United States Department of Labor."

(3) *Documentation.* The employer shall provide a statement setting forth the name and address of the person to whom the notice was provided and where and when the notice was posted and shall attach a copy of the notice.

(g) *Actions on attestations submitted for filing.* Once an attestation has been received from an employer, a determination shall be made by the

regional Certifying Officer whether to accept the attestation for filing or return it. The regional Certifying Officer may request additional explanation and/or documentation from the employer in making this determination. An attestation which is properly filled out and which includes accompanying documentation for each of the requirements set forth at § _____.510 (d) through (f) shall be accepted for filing by ETA on the date it is signed by the regional Certifying Officer unless it falls within one of the categories set forth in paragraph (g)(2) of this section. Once an attestation is accepted for filing, ETA shall then follow the procedures set forth in paragraph (g)(1) of this section. Upon acceptance of the employer's attestation by ETA, the attestation and accompanying documentation will be forwarded and shall be available in a timely manner for public examination at the ETA national office. ETA shall not consider information contesting an attestation received by ETA prior to the determination to accept or return the attestation for filing. Such information shall not be made part of ETA's administrative record on the attestation, but shall be referred to ESA to be processed as a complaint pursuant to subpart G of this part if the attestation is accepted by ETA for filing.

(1) *Acceptance.* (i) If the attestation is properly filled out and includes accompanying documentation for each of the requirements at § _____.510 (d) through (f) of this subpart, and does not fall within one of the categories set forth at paragraph (g)(2) of this section, ETA shall accept the attestation for filing, notify the Attorney General in writing of the filing, and return to the employer, or the employer's agent or representative at a U.S. address, one copy of the attestation form submitted by the employer, with ETA's acceptance indicated thereon. The employer may then use alien crewmembers for the particular activity of longshore work at the U.S. port cited in the attestation in accordance with INS regulations.

(ii) DOL is not the guarantor of the accuracy, truthfulness or adequacy of an attestation accepted for filing.

(2) *Unacceptable Attestations.* ETA shall not accept an attestation for filing and shall return such attestation to the employer, or the employer's agent or representative at a U.S. address, when one of the following conditions exists:

(i) When the Form ETA 9033 is not properly filled out. Examples of improperly filled out Form ETA 9033's include instances where the employer has neglected to check all the necessary boxes, or where the employer has failed to include the name of the port where it intends to use the alien crewmembers for longshore work, or where the employer has named a port that is not listed in appendix A and has failed to submit facts and evidence to support a showing that the location is a port as defined by § _____.502, or when the employer has failed to sign the attestation or to designate an agent in the United States;

(ii) When the Form ETA 9033 with accompanying documentation is not received by ETA at least 14 days prior to the date of performance of the first activity indicated on the Form ETA 9033; unless the employer is claiming an unanticipated emergency, has included documentation which supports such claim, and ETA has found the claim to be valid;

(iii) When the Form ETA 9033 does not include accompanying documentation for each of the requirements set forth at § _____.510 (d) through (f);

(iv) When the accompanying documentation required by paragraph (c) of this section submitted by the employer, on its face, is inconsistent with the requirements set forth at § _____.510 (d) through (f). Examples of such a situation include instances where the Form ETA 9033 pertains to one port and the accompanying documentation to another; where the Form ETA 9033 pertains to one activity of longshore work and the accompanying documentation obviously refers to another; or where the documentation clearly indicates that only thirty percent, instead of the required fifty percent, of the activity attested to is performed by alien crewmembers;

(v) When the Administrator, Wage and Hour Division, has notified ETA, in writing, after an investigation pursuant to subpart G of this part, that the particular activity of longshore work which the employer has attested is the prevailing practice at a particular port, is not, in fact, the prevailing practice at the particular port;

(vi) When the Administrator, Wage and Hour Division, has notified ETA, in writing, that a cease and desist order has been issued pursuant to subpart G of this part, with respect to the attesting employer's performance of the particular activity and port, in violation of a previously accepted attestation;

(vii) When the Administrator, Wage and Hour Division, has notified ETA, in writing, after an investigation pursuant to subpart G of this part, that the particular employer has misrepresented or failed to comply with an attestation previously submitted and accepted for filing, but in no case for a period of more than one year after the date of the Administrator's notice and provided that INS has not advised ETA that the prohibition is in effect for a lesser period; or

(viii) When the Administrator, Wage and Hour Division, has notified ETA, in writing, that the employer has failed to comply with any penalty, sanction, or other remedy assessed in a fainal agency action following an investigation by the Wage and Hour Division pursuant to subpart G of this part.

(3) *Resubmission.* If the attestation is not accepted for filing pursuant to the categories set forth in paragraph (g)(2) of this section, ETA shall return to the employer, or the employer's agent or representative, at a U.S. address, the attestation form and accompanying documentation submitted by the employer. ETA shall notify the employer, in writing, of the reason(s) that the attestation is unacceptable. When an attestation is found to be unacceptable pursuant to paragraphs (g)(2) (i) through (iv) of this section, the employer may resubmit the attestation with the proper documentation. When an attestation is found to be unacceptable pursuant to paragraphs (g)(2) (v) through (viii) of this section and returned, such action shall be the final decision of the Secretary of Labor.

(h) *Effective date and validity of filed attestations.* An attestation is filed and effective as of the date it is accepted and signed by the regional Certifying Officer. Such attestation is valid for the 12-month period beginning on the date of acceptance for filing, unless suspended or invalidated pursuant to subpart G of this part or paragraph (i) of this section. The filed attestation expires at the end of the 12-month period of validity.

(i) *Suspension or invalidation of filed attestations.* Suspension or invalidation of an attestation may result from enforcement action(s) under subpart G of this part (*i.e.*, investigation(s) conducted by the Administrator or cease and desist order(s) issued by the Administrator regarding the employer's misrepresentation in or failure to carry out its attestation); or from a discovery by ETA that it made an error in accepting the attestation because such attestation falls within one of the categories set forth in paragraph (g)(2) of this section.

(1) *Result of Wage and Hour Division action.* Upon the determination of a violation under subpart G of this part, the Administrator shall, pursuant to § _____.660(b), notify the Attorney General of the violation and of the Administrator's notice to ETA.

(2) *Result of ETA action.* If, after accepting an attestation for filing, ETA finds that the attestation is unacceptable because it falls within one of the categories set forth at paragraph (g)(2) of this section, and as a result, ETA suspends or invalidates the attestation, ETA shall notify the Attorney General of such suspension or invalidation and shall return a copy of the attestation form to the employer, or the employer's agent or representative, at a U.S. address. ETA shall notify the employer, in writing, of the reason(s) that the attestation is suspended or invalidated. When an attestation is found to be suspended or invalidated pursuant to paragraphs (g)(2)(i) through (iv) of this section, the employer may resubmit the attestation with the proper documentation. When an attestation is suspended or invalidated because it falls within one of the categories in paragraphs (g)(2)(v) through (viii) of this section, such action shall be the final decision of the Secretary of Labor, except as set forth in subpart G of this part.

(j) *Withdrawal of accepted attestations.* (1) An employer who has submitted an attestation which has been accepted for filing may withdraw such attestation at any time before the 12-month period of its validity terminates, unless the Administrator has found reasonable cause under subpart G to commence an investigation of the particular attestation. Such withdrawal may be advisable, for example, when the employer learns that the particular activity(ies) of longshore work which it has attested is the prevailing practice to perform with alien crewmembers may not, in fact, have been the prevailing practice at the particular port at the time of filing. Requests for such withdrawals shall be in writing and shall be directed to the regional Certifying Officer.

(2) Withdrawal of an attestation shall not affect an employer's liability with respect to any failure to meet the conditions attested to which took place before the withdrawal, or for misrepresentations in an attestation. However, if an employer has not yet performed the particular longshore activity(ies) at the port in question, the Administrator will not find reasonable cause to investigate unless it is alleged, and there is reasonable cause to believe, that the employer has made misrepresentations in the attestation or documentation thereof, or that the employer has not in fact given the notice attested to.

(Approved by the Office of Management and Budget under Control No. 1205–0309.)

§_____.520 Special provisions regarding automated vessels.

In general, an attestation is not required in the case of a particular activity of longshore work consisting of the use of automated self-unloading conveyor belt or vacuum-actuated systems on a vessel. The legislation creates a rebuttable presumption that the use of alien crewmembers for the operation of such automated systems is the prevailing practice. In order to overcome such presumption, it must be shown by the preponderance of the evidence submitted by any interested party, that the use of alien crewmembers for such activity is not the prevailing practice. Longshore work involving the use of such equipment shall be exempt from the attestation requirement only if the activity consists of using that equipment. If the automated equipment is not used in the particular activity of longshore work, an attestation is required as described under §_____.510 of this part if it is the prevailing practice in the port to use alien crewmembers for this work. When the automated equipment is used in the particular activity of longshore work, an attestation is required only if the Administrator finds, based on a preponderance of the evidence which may be submitted by any interested party, that the performance of the particular activity of longshore work is not the prevailing practice at the port, or was during a strike or lockout or intended to influence an election of a bargaining representative for workers in the local port, or if the Administrator issues a cease and desist order against use of the automated equipment without such attestation.

(a) *Procedure when attestation is required.* If it is determined pursuant to subpart G of this part that an attestation is required for longshore work consisting of the use of automated equipment, the employer shall comply with all the requirements set forth at §_____.510 of this part except paragraph (d) of §_____.510. In lieu of complying with §_____.510(d) of this part, the employer shall comply with paragraph (b) of this section.

(b) *The first attestation element: prevailing practice for automated vessels.* For an employer to be in compliance with the first attestation element, it is required to have been the prevailing practice that over fifty percent (as described in paragraph (b)(1) of this section) of a particular activity of longshore work which was performed through the use of automated self-unloading conveyor belt or vacuum-actuated equipment at the particular port during the 12-month period preceding the filing of the attestation, was performed by alien crewmembers. For purposes of this paragraph (b), only automated vessels shall be included in counting the number of vessels which dock at the port.

(1) *Establishing a prevailing practice.*

(i) In establishing that the use of alien crewmembers to perform a particular activity of longshore work consisting of the use of self-unloading conveyor belt or vacuum-actuated systems on a vessel is the prevailing practice at a particular port, an employer shall submit facts and evidence to show that in the 12-month period preceding the filing of the attestation, one of the following conditions existed:

(A) Over fifty percent of the automated vessels docking at the port used alien crewmembers for the activity (for purposes of this paragraph (b)(1), a vessel shall be counted each time it docks at the particular port); or

(B) Alien crewmembers made up over fifty percent of the workers who performed the activity with respect to such automated vessels.

(ii) *Prevailing practice after Secretary of State determination of non-reciprocity.* Section 258(d) of the Act provides a reciprocity exception (separate from the prevailing practice exception) to the prohibition on performance of longshore work by alien crewmembers in U.S. ports. However, this reciprocity exception becomes nonapplicable where the Secretary of State determines that, for a particular activity of longshore work, a particular country (by law, regulation, or practice) prohibits such activity by U.S. crewmembers in its ports. When the Secretary of State places a country on the non-reciprocity list (which means, for purposes of this section, *Prohibitions on longshore work by U.S. nationals; listing by country* at 22 CFR 89.1), crewmembers on vessels from that country (that is, vessels that are registered in that country or vessels whose majority ownership interest is held by nationals of that country) are not permitted to perform longshore work in U.S. waters, absent applicability of some exception other than the reciprocity exception. The Secretary of State's determination has the following effects in the establishment of a prevailing practice for a particular longshore activity at a particular U.S. port for purposes of the prevailing practice exception.

(A) An employer from any country, other than the country which is placed on the non-reciprocity list, may include the longshore activities performed by

alien crewmembers on all vessels in establishing the prevailing practice for a particular longshore activity in a particular port.

(B) An employer from a country which is placed on the non-reciprocity list may file an attestation for the prevailing practice exception under the standards and requirements established in this Subpart F (except as provided in (b)(1)(ii)(C) of this section), *provided that* the attestation is filed at least 12 months after the date on which the employer's country is placed on the list.

(C) An employer from a country which is placed on the non-reciprocity list may file an attestation pursuant to the prevailing practice exception earlier than 12 months from the date on which the employer's country is placed on the list, *except that* the following restrictions shall apply to such attestation:

(*1*) The employer shall submit facts and evidence to show that, for the 12-month period preceding the date of the attestation, the use of alien crewmembers to perform a particular activity of longshore work was permitted by the prevailing practice in the port (as defined in paragraph (d)(1)(i) of this section) *without* considering or including such activity by crewmembers on vessels from the employer's country; *or*

(*2*) The employer shall submit facts and evidence (including data on activities performed by crewmembers on vessels from the employer's country) to show that the use of alien crewmembers to perform a particular activity of longshore work was permitted by the prevailing practice in the port (as defined in paragraph (b)(1)(i) of this section) for one of two periods—

(*i*) For the employer whose country has not previously been on the non-reciprocity list, the period is the continuous 12-month period prior to May 28, 1991 (the effective date of section 258 of the Act); or

(*ii*) For the employer whose country was at some time on the non-reciprocity list, but was subsequently removed from the non-reciprocity list and then restored to the non-reciprocity list (on one or more occasions), the period is the last continuous 12-month period during which the employer's country was not under the reciprocity exception (that is, was listed on the non-reciprocity list).

(2) *Documentation.* In assembling the documentation described in paragraph (b)(1) of this section, the employer may consult with the port authority which has jurisdiction over the local port, the collective bargaining representative(s) of longshore workers at the local port, other employers, or any other entity which is familiar with the practices at the port. The documentation shall include a written summary of a survey of the experience of shipmasters who entered the local port in the previous year; or a letter, affidavit, or other written statement from an appropriate local port authority regarding the use of alien crewmembers to perform the longshore activity at the port in the previous year; or other documentation of comparable weight. Written statements from collective bargaining representatives and/or shipping agents with direct knowledge of practices regarding the use of alien crewmembers may also be pertinent. Such documentation shall accompany the Form ETA 9033, and any underlying documentation which supports the employer's burden of proof shall be maintained in the employer's records at the office of the U.S. agent as required under §_____.510(c)(1) of this part.

(Approved by the Office of Management and Budget under Control No. 1205–0309)

§_____.550 Public access.

(a) *Public examination at ETA.* ETA shall make available for public examination in Washington, DC, a list of employers which have filed attestations, and for each such employer, a copy of the employer's attestation and accompanying documentation it has received.

(b) *Notice to public.* ETA periodically shall publish a list in the **Federal Register** identifying employers which have submitted attestations; employers which have attestations on file; and employers which have submitted attestations which have been found unacceptable for filing.

(Approved by the Office of Management and Budget under Control No. 1205–0309.)

Appendix A to Subpart F—U.S. Seaports

The list of 224 seaports includes all major and most smaller ports serving ocean and Great Lakes commerce.

North Atlantic Range

Bucksport, ME
Eastport, ME
Portland, ME
Searsport, ME
Portsmouth, NH
Boston, MA
Fall River, MA
New Bedford, MA
Providence, RI
Bridgeport, CT
New Haven, CT
New London, CT
Albany, NY
New York, NY/NJ
Camden, NJ
Gloucester City, NJ
Paulsboro, NJ
Chester, PA
Marcus Hook, PA
Philadelphia, PA
Delaware City, DE
Wilmington, DE
Baltimore, MD
Cambridge, MD
Alexandria, VA
Chesapeake, VA
Hopewell, VA
Newport News, VA
Norfolk, VA
Portsmouth, VA
Richmond, VA

South Atlantic Range

Morehead City, NC
Southport, NC
Wilmington, NC
Charleston, SC
Georgetown, SC
Port Royal, SC
Brunswick, GA
Savannah, GA
St. Mary, GA
Cocoa, FL
Fernandina Beach, FL
Fort Lauderdale, FL
Fort Pierce, FL
Jacksonville, FL
Miami, FL
Palm Beach, FL
Port Canaveral, FL
Port Everglades, FL
Riviera, FL
Agudilla, PR
Ceiba, PR
Guanica, PR
Guayanilla, PR
Humacao, PR
Jobos, PR
Mayaguez, PR
Ponce, PR
San Juan, PR
Vieques, PR
Yabucoa, PR
Alucroix, VI
Charlotte Amalie, VI
Christiansted, VI
Frederiksted, VI
Limetree Bay, VI

North Pacific Range

Astoria, OR
Bandon, OR
Columbia City, OR
Coos Bay, OR
Mapleton, OR
Newport, OR
Portland, OR
Rainier, OR
Reedsport, OR
St. Helens, OR
Toledo, OR
Anacortes, WA
Bellingham, WA
Edmonds (Edwards Point), WA
Everett, WA
Ferndale, WA
Friday Harbor, WA
Grays Harbor, WA
Kalama, WA
Longview, WA
Olympia, WA
Point Wells, WA
Portage, WA
Port Angeles, WA
Port Gambe, WA
Port Townsend, WA
Raymond, WA
Seattle, WA
Tacoma, WA
Vancouver, WA
Willapa Harbor, WA
Winslow, WA
Anchorage, AK
Cordova, AK
Dutch Harbor, AK
Haines, AK
Homer, AK
Juneau, AK
Kenai, AK
Ketchikan, AK
Klawock/Craig, AK
Kodiak, AK
Metlakatla, AK
Nikisnka, AK
Pelican, AK
Petersburg, AK
Seward, AK
Sitka, AK
Skagway, AK
Unalaska, AK
Valdez, AK
Whittier, AK
Wrangell, AK

Great Lakes Range

Duluth, MN
Silver Bay, MN
Green Bay, WI
Kenosha, WI
Manitowoc, WI
Milwaukee, WI
Sheboygan, WI
Superior, WI
Alpena, MI
Bay City, MI
Detroit, MI
De Tour Village, MI
Essexville, MI
Ferrysburg, MI
Grand Haven, MI
Marine City, MI
Muskegon, MI
Port Huron, MI
Presque Isle, MI
Rogers City, MI
Saginaw, MI
Sault Ste Marie, MI
Chicago, IL
Ashtabula, OH
Cincinnati, OH
Cleveland, OH
Conneaut, OH
Fairport, OH
Huron, OH
Lorain, OH
Sandusky, OH
Toledo, OH
Erie, PA
Buffalo, NY
Odgensburg, NY
Oswego, NY
Rochester, NY
Burns Harbor, IN
E. Chicago, IN
Gary, IN

Gulf Coast Range

Panama City, FL
Pensacola, FL
Port Manatee, FL
Port St. Joe, FL
Tampa, FL
Mobile, AL
Gulfport, MS
Pascagoula, MS
Baton Rouge, LA
Gretna, LA
Lake Charles, LA
Louisiana Offshore Oil Port, LA
New Orleans, LA
Beaumont, TX
Brownsville, TX
Corpus Christi, TX
Freeport, TX
Galveston, TX
Harbor Island, TX

Houston, TX	Port Lavaca, TX
Orange, TX	Port Neches, TX
Port Arthur, TX	Sabine, TX
Port Isabel, TX	Texas City, TX

South Pacific Range

Alameda, CA	Port Hueneme, CA
Antioch, CA	Port San Luis, CA
Benicia, CA	Redwood City, CA
Carlsbad, CA	Richmond, CA
Carpinteria, CA	Sacramento, CA
Crockett, CA	San Diego, CA
El Segundo, CA	San Francisco, CA
Eureka, CA	Selby, CA
Estero Bay, CA	Stockton, CA
Gaviota, CA	Vallejo, CA
Huntington Beach, CA	Ventura, CA
Long Beach, CA	Barbers Point, HI
Los Angeles, CA	Hilo, HI
Mandalay Beach, CA	Honolulu, HI
Martinez, CA	Kahului, HI
Moss Landing, CA	Kaunakakai, HI
Oakland, CA	Kawaihae, HI
Pittsburg, CA	Nawiliwili, HI
Port Costa, CA	Port Allen, HI

Subpart G—Enforcement of the Limitations Imposed on Employers Using Alien Crewmembers for Longshore Activities in U.S. Ports

§ _____.600 Enforcement authority of Administrator, Wage and Hour Division.

(a) The Administrator shall perform all the Secretary's investigative and enforcement functions under section 258 of the INA (8 U.S.C. 1288) and subparts F and G of this part.

(b) The Administrator, pursuant to a complaint, shall conduct such investigations as may be appropriate and, in connection therewith, enter and inspect such places and such records (and make transcriptions or copies thereof), question such persons and gather such information as deemed necessary by the Administrator to determine compliance regarding the matters which are the subject of the investigation.

(c) An employer being investigated shall make available to the Administrator such records, information, persons, and places as the Administrator deems appropriate to copy, transcribe, question, or inspect. No employer subject to the provisions of section 258 of the INA (8 U.S.C. 1288) and subparts F and G of this part shall interfere with any official of the Department of Labor performing an investigation, inspection or law enforcement function pursuant to 8 U.S.C. 1288 or subpart F or G of this part. Any such interference shall be a violation of the attestation and subparts F and G of this part, and the Administrator may take such further actions as the Administrator considers appropriate.

Note: Federal criminal statutes prohibit certain interference with a Federal officer in the performance of official duties. 18 U.S.C. 111 and 18 U.S.C. 1114.

(d)(1) An employer subject to subparts F and G of this part shall at all times cooperate in administrative and enforcement proceedings. No employer shall intimidate, threaten, restrain, coerce, blacklist, discharge, or in any manner discriminate against any person because such person has:

(i) Filed a complaint or appeal under or related to section 258 of the INA (8 U.S.C. 1288) or subpart F or G of this part;

(ii) Testified or is about to testify in any proceeding under or related to section 258 of the INA (8 U.S.C. 1288) or subpart F or G of this part;

(iii) Exercised or asserted on behalf of himself or herself or others any right or protection afforded by section 258 of the INA (8 U.S.C. 1288) or subpart F or G of this part.

(iv) Consulted with an employee of a legal assistance program or an attorney on matters related to section 258 of the Act or to subpart F or G of this part or any other DOL regulation promulgated pursuant to 8 U.S.C. 1288.

(2) In the event of such intimidation or restraint as are described in this paragraph (d)(1) of this section, the conduct shall be a violation of the attestation and subparts F and G of this part, and the Administrator may take such further actions as the Administrator considers appropriate.

(e) The Administrator shall, to the extent possible under existing law, protect the confidentiality of any person who provides information to the Department in confidence in the course of an investigation or otherwise under subpart F or G of this part. However, confidentiality will not be afforded to the complainant or to information provided by the complainant.

§ _____.605 Complaints and investigative procedures.

(a) The Administrator, through an investigation, shall determine whether a basis exists to make a finding that:

(1) An attesting employer has—

(i) Failed to meet conditions attested to; or

(ii) Misrepresented a material fact in an attestation (**Note:** Federal criminal statutes provide penalties of up to $10,000 and/or imprisonment of up to 5 years for knowing and willful submission of false statements to the Federal Government. 18 U.S.C. 1001; see also 18 U.S.C. 1546.); or

(2) In the case of an employer operating under the automated vessel exception to the prohibition on utilizing alien crewmembers to perform longshore activity(ies) at a U.S. port, the employer—

(i) Is utilizing alien crewmember(s) to perform longshore activity(ies) at a port where the prevailing practice has not been to use such workers for such activity(ies); or

(ii) Is utilizing alien crewmember(s) to perform longshore activities:

(A) During a strike or lockout in the course of a labor dispute at the U.S. port; and/or

(B) With intent or design to influence an election of a bargaining representative for workers at the U.S. port; or

(3) An employer failed to comply in any other manner with the provisions of subpart F or G of this part.

(b) Any aggrieved person or organization may file a complaint of a violation of the provisions of subpart F of G of this part.

(1) No particular form of complaint is required, except that the complaint shall be written or, if oral, shall be reduced to writing by the Wage and Hour Division official who receives the complaint.

(2) The complaint shall set forth sufficient facts for the Administrator to determine—

(i) Whether, in the case of an attesting employer, there is reasonable cause to believe that particular part or parts of the attestation or regulations have been violated; or

(ii) Whether, in the case of an employer claiming the automated vessel exception, the preponderance of the evidence submitted by any interested party shows that conditions exist that would require the employer to file an attestation.

(3) The complaint may be submitted to any local Wage and Hour Division office; the addresses of such offices are found in local telephone directories. The office or person receiving such a complaint shall refer it to the office of the Wage and Hour Division administering the area in which the reported violation is alleged to have occurred.

(c) The Administrator shall determine whether there is reasonable cause to believe that the complaint warrants investigation. If the Administrator determines that the complaint fails to present reasonable cause for an investigation, the Administrator shall so notify the complainant, who may submit a new complaint, with such additional information as may be necessary. There shall be no hearing pursuant to § _____.625 for the Administrator's determination not to conduct an investigation. If the Administrator determines that an investigation on the

complaint is warranted, the investigation shall be conducted and a determination issued within 180 calendar days of the Administrator's receipt of the complaint, or later for good cause shown.

(d) In conducting an investigation, the Administrator may consider and make part of the investigation file any evidence or materials that have been compiled in any previous investigation regarding the same or a closely related matter.

(e) In conducting an investigation under an attestation, the Administrator shall take into consideration the employer's burden to provide facts and evidence to establish the matters asserted. In conducting an investigation regarding an employer's eligibility for the automated vessel exception, the Administrator shall not impose the burden of proof on the employer, but shall consider all evidence from any interested party in determining whether the employer is not eligible for the exception.

(f) In an investigation regarding the use of alien crewmembers to perform longshore activity(ies) in a U.S. port (whether by an attesting employer or by an employer claiming the automated vessel exception), the Administrator shall accept as conclusive proof a previous Departmental determination, published in the **Federal Register** pursuant to § _____.670, establishing that such use of alien crewmembers is not the prevailing practice for the activity(ies) and U.S. port at issue. The Administrator shall give appropriate weight to a previous Departmental determination published in the **Federal Register** pursuant to § _____.670, establishing that at the time of such determination, such use of alien crewmembers was the prevailing practice for the activity(ies) and U.S. port at issue.

(g) When an investigation has been conducted, the Administrator shall, within the time period specified in paragraph (c) of this section, issue a written determination as to whether a basis exists to make a finding stated in paragraph (a) of this section. The determination shall be issued and an opportunity for a hearing shall be afforded in accordance with the procedures specified in § _____.625(d) of this part.

§ _____.610 Automated vessel exception to prohibition on utilization of alien crewmember(s) to perform longshore activity(ies) at a U.S. port.

(a) The Act establishes a rebuttable presumption that the prevailing practice in U.S. ports is for automated vessels (*i.e.*, vessels equipped with automated self-unloading conveyor belts or vacuum-actuated systems) to use alien crewmembers to perform longshore activity(ies) through the use of the self-unloading equipment. An employer claiming the automated vessel exception does not have the burden of establishing eligibility for the exception.

(b) In the event of a complaint asserting that an employer claiming the automated vessel exception is not eligible for such exception, the Administrator shall determine whether the preponderance of the evidence submitted by any interested party shows that:

(1) It is not the prevailing practice at the U.S. port to use alien crewmember(s) to perform the longshore activity(ies) through the use of the self-unloading equipment; or

(2) The employer is using alien crewmembers to perform longshore activity(ies)—

(i) During a strike or lockout in the course of a labor dispute at the U.S. port; and/or

(ii) With intent or design to influence an election of a bargaining representative for workers at the U.S. port.

(c) In making the prevailing practice determination required by paragraph (b)(1) of this section, the Administrator shall determine whether, in the 12-month period preceding the date of the Administrator's receipt of the complaint, one of the following conditions existed:

(1) Over fifty percent of the automated vessels docking at the port used alien crewmembers for the activity (for purposes of this paragraph (c)(1) of this section, a vessel shall be counted each time it docks at the particular port); or

(2) Alien crewmembers made up over fifty percent of the workers who performed the activity with respect to such automated vessels.

(d) An interested party, complaining that the automated vessel exception is not applicable to a particular employer, shall provide to the Administrator evidence such as:

(1) A written summary of a survey of the experience of masters of automated vessels which entered the local port in the previous year, describing the practice in the port as to the use of alien crewmembers;

(2) A letter, affidavit, or other written statement from an appropriate local port authority regarding the use of alien crewmembers to perform the longshore activity at the port in the previous year;

(3) Written statements from collective bargaining representatives and/or shipping agents with direct knowledge of practices regarding the use of alien crewmembers at the port in the previous year.

§ _____.615 Cease and desist order.

(a) If the Administrator determines that reasonable cause exists to conduct an investigation with respect to an attestation, the complainant may request that the Administrator enter a cease and desist order against the employer against whom the complaint is lodged.

(1) The request for a cease and desist order may be filed along with the complaint, or may be filed subsequently. The request, including all accompanying documents, shall be filed in duplicate with the same Wage and Hour Division office that received the complaint.

(2) No particular form is prescribed for a request for a cease and desist order pursuant to this paragraph (a). However, any such request shall:

(i) Be dated;

(ii) Be typewritten or legibly written;

(iii) Specify the attestation provision(s) with respect to which the employer allegedly failed to comply and/or submitted misrepresentation(s) of material fact(s);

(iv) Be accompanied by evidence to substantiate the allegation(s) of noncompliance and/or misrepresentation;

(v) Be signed by the complaining party making the request or by the authorized representative of such party;

(vi) Include the address at which such complaining party or authorized representative desires to receive further communications relating thereto.

(3) Upon receipt of a request for a cease and desist order, the Administrator shall promptly notify the employer of the request. The Administrator's notice shall:

(i) Inform the employer that it may respond to the request and meet with a Wage and Hour Division official within 14 calendar days of the date of the notice;

(ii) Be served upon the employer by facsimile transmission, in person, or by certified or regular mail, at the address of the U.S. agent stated on the employer's attestation;

(iii) Be accompanied by copies of the complaint, the request for a cease and desist order, the evidence submitted by the complainant, and any evidence from other investigation(s) of the same or a closely related matter which the Administrator may incorporate into the record. (Any such evidence from other investigation(s) shall also be made available for examination by the complaining party at the Wage and

Hour Division office which issued the notice.)

(4) No particular form is prescribed for the employer's response to the complaining party's request for a cease and desist order under this paragraph (a). However, any such response shall:

(i) Be dated;

(ii) Be submitted by facsimile transmission, in person, by certified or regular mail, or by courier service to the Wage and Hour Division office which issued the notice of the request;

(iii) Be received by the appropriate Wage and Hour Division office no later than 14 calendar days from the date of the notice of the request;

(iv) Be typewritten or legibly written;

(v) Explain, in any detail desired by the employer, the employer's grounds or reasons as to why the Administrator should deny the requested cease and desist order;

(vi) Be accompanied by evidence to substantiate the employer's grounds or reasons as to why the Administrator should deny the requested cease and desist order;

(vii) Specify whether the employer desires an informal meeting with a Wage and Hour Division official;

(viii) Be signed by the employer or its authorized representative;

(ix) Include the address at which the employer or its authorized representative desires to receive further communications relating thereto, if such address is different from the address of the U.S. agent stated on the attestation.

(5) In the event the employer requests a meeting with a Wage and Hour Division official, the Administrator shall provide the employer and the complaining party, or their authorized representatives, an opportunity for such a meeting to present their views regarding the evidence and arguments submitted by the parties. This shall be an informal meeting, not subject to any procedural rules. The meeting shall be held within the 14 calendar days permitted for the employer's response to the request for the cease and desist order, and shall be held at a time and place set by the Wage and Hour Division official, who shall notify the parties.

(6) After receipt of the employer's timely response and after any informal meeting which may have been held with the parties, the Administrator shall promptly issue a written determination, either denying the request or issuing a cease and desist order. In making the determination, the Administrator shall consider all the evidence submitted, including any evidence from the same or a closely related matter which the Administrator has incorporated into the record and provided to the employer. If the Administrator determines that the complaining party's position is supported by a preponderance of the evidence submitted, the Administrator shall order that the employer cease the activities specified in the determination, until the completion of the Administrator's investigation and any subsequent proceedings pursuant to § _____.625 of this part, unless the prohibition is lifted by subsequent order of the Administrator because it is later determined that the employer's position was correct. While the cease and desist order is in effect, ETA shall suspend the subject attestation and shall not accept any subsequent attestation from the employer for the activity(ies) and U.S. port at issue.

(7) The Administrator's cease and desist order shall be served on the employer at the address of its designated U.S. based representative or at the address specified in the employer's response, by facsimile transmission, personal service, or certified mail.

(b) If the Administrator determines that reasonable cause exists to conduct an investigation with respect to a complaint that a non-attesting employer is not entitled to the automated vessel exception to the requirement for the filing of an attestation, a complaining party may request that the Administrator enter a cease and desist order against the employer against whom the complaint is lodged.

(1) The request for a cease and desist order may be filed along with the complaint, or may be filed subsequently. The request, including all accompanying documents, shall be filed in duplicate with the same Wage and Hour Division office that received the complaint.

(2) No particular form is prescribed for a request for a cease and desist order pursuant to this paragraph. However, any such request shall:

(i) Be dated;

(ii) Be typewritten or legibly written;

(iii) Specify the circumstances which allegedly require that the employer be denied the use of the automated vessel exception;

(iv) Be accompanied by evidence to substantiate the allegation(s);

(v) Be signed by the complaining party making the request or by the authorized representative of such party;

(vi) Include the address at which such complaining party or authorized representative desires to receive further communications relating thereto.

(3) Upon receipt of a request for a cease and desist order, the Administrator shall notify the employer of the request. The Administrator's notice shall:

(i) Inform the employer that it may respond to the request and meet with a Wage and Hour Division official within 14 calendar days of the date of the notice;

(ii) Be served upon the employer by facsimile transmission, in person, or by certified or regular mail, at the employer's last known address;

(iii) Be accompanied by copies of the complaint, the request for a cease and desist order, the evidence submitted by the complainant, and any evidence from other investigation(s) of the same or closely related matter which the Administrator may incorporate into the record. (Any such evidence from other investigation(s) shall also be made available for examination by the complaining party at the Wage and Hour Division office which issued the notice.)

(4) No particular form is prescribed for the employer's response to the complaining party's request for a cease and desist order under this paragraph (b). However, any such response shall:

(i) Be dated;

(ii) Be submitted by facsimile transmission, in person, by certified or regular mail, or by courier service to the Wage and Hour Division office which issued the notice of the request;

(iii) Be received by the appropriate Wage and Hour Division office no later than 14 calendar days from the date of the notice of the request;

(iv) Be typewritten or legibly written;

(v) Explain, in any detail desired by the employer, the employer's grounds or reasons a to why the Administrator should deny the requested cease and desist order;

(vi) Be accompanied by evidence to substantiate the employer's grounds or reasons as to why the Administrator should deny the requested cease and desist order;

(vii) Specify whether the employer desires an informal meeting with a Wage and Hour Division official;

(viii) Be signed by the employer or its authorized representative;

(ix) Include the address at which the employer or its authorized representative desires to receive further communications relating thereto.

(5) In the event the employer requests a meeting with a Wage and Hour Division official, the Administrator shall provide the employer and the complaining party, or their authorized representatives, an opportunity for such a meeting to present their views regarding the evidence and arguments submitted by the parties. This shall be

an informal meeting, not subject to any procedural rules. The meeting shall be held within the 14 calendar days permitted for the employer's response to the request for the cease and desist order, and shall be held at a time and place set by the Wage and Hour Division official, who shall notify the parties.

(6) After receipt of the employer's timely response and after any informal meeting which may have been held with the parties, the Administrator shall promptly issue a written determination, either denying the request or issuing a cease and desist order. If the Administrator determines that the complaining party's position is supported by a preponderance of the evidence submitted, the Administrator shall order that the employer cease the use of alien crewmembers to perform the longshore activity(ies) specified in the order. In making the determination, the Administrator shall consider all the evidence submitted, including any evidence from the same or a closely related matter which the Administrator has incorporated into the record and provided to the employer. The order shall remain in effect until the completion of the investigation and any subsequent hearing proceedings pursuant to § _____.625 of this part, unless the employer files and maintains on file with ETA an attestation pursuant to § _____.520 of this part or unless the prohibition is lifted by subsequent order of the Administrator because it is later determined that the employer's position was correct.

(7) The Administrator's cease and desist order shall be served on the employer or its designated representative by facsimile transmission, personal service, or by certified mail at the address specified in the employer's response or, if no such address was specified, at the employer's last known address.

§ _____.620 Civil money penalties and other remedies.

(a) The Administrator may assess a civil money penalty not to exceed $5,000 for each alien crewmember with respect to whom there has been a violation of the attestation or subpart F or G of this part. The Administrator may also impose appropriate remedy(ies).

(b) In determining the amount of civil money penalty to be assessed, the Administrator shall consider the type of violation committed and other relevant factors. The factors which may be considered include, but are not limited to, the following:

(1) Previous history of violation, or violations, by the employer under the Act and subpart F or G of this part;

(2) The number of workers affected by the violation or violations;

(3) The gravity of the violation or violations;

(4) Efforts made by the violator in good faith to comply with the provisions of 8 U.S.C. 1288(c) and subparts F and G of this part;

(5) The violator's explanation of the violation or violations;

(6) The violator's commitment to future compliance; and

(7) The extent to which the violator achieved a financial gain due to the violation, or the potential financial loss, potential injury or adverse effect with respect to other parties.

(c) The civil money penalty, and any other remedy determined by the Administrator to be appropriate, are immediately due for payment or performance upon the assessment by the Administrator, or the decision by an administrative law judge where a hearing is requested, or the decision by the Secretary where review is granted. The employer shall remit the amount of the civil money penalty, by certified check or money order made payable to the order of "Wage and Hour Division, Labor." The remittance shall be delivered or mailed to the Wage and Hour Division office for the area in which the violations occurred. The performance of any other remedy prescribed by the Administrator shall follow procedures established by the Administrator. The employer's failure to pay the civil money penalty, or to perform any other remedy prescribed by the Administrator, shall result in the rejection by ETA of any future attestation submitted by the employer, until such payment or performance is accomplished.

§ _____.625 Written notice, service and Federal Register publication of Administrator's determination.

(a) The Administrator's determination, issued pursuant to § _____.605 of this part, shall be served on the complainant, the employer, and other known interested parties by personal service or by certified mail at the parties' last known addresses. Where service by certified mail is not accepted by the party, the Administrator may exercise discretion to serve the determination by regular mail.

(b) Where the Administrator determines the prevailing practice regarding the use of alien crewmember(s) to perform longshore activity(ies) in a U.S. port (whether the Administrator's investigation involves an employer operating under an attestation, or under the automated vessel exception), the Administrator shall, simultaneously with issuance of the determination, publish in the **Federal Register** a notice of the determination. The notice shall identify the activity(ies), the U.S. port, and the prevailing practice regarding the use of alien crewmembers. The notice shall also inform interested parties that they may request a hearing pursuant to § _____.630 of this part, within 15 days of the date of the determination.

(c) The Administrator shall file with the Chief Administrative Law Judge, U.S. Department of Labor, a copy of the complaint and the Administrator's determination.

(d) The Administrator's written determination required by § _____.605 of this part shall:

(1) Set forth the determination of the Administrator and the reason or reasons therefor, and in the case of a finding of violation(s) by an attesting employer, prescribe any remedies, including the amount of any civil money penalties assessed and the reason therefor, and/or any other remedies required for compliance with the employer's attestation.

(2) Inform the interested parties that they may request a hearing pursuant to § _____.625 of this part.

(3) Inform the interested parties that in the absence of a timely request for a hearing, received by the Chief Administrative Law Judge within 15 calendar days of the date of determination, the determination of the Administrator shall become final and not appealable.

(4) Set forth in the procedure for requesting a hearing, and give the address of the Chief Administrative Law Judge (with whom the request must be filed) and the representative(s) of the Solicitor of Labor (upon whom copies of the request must be served).

(5) Inform the parties that, pursuant to § _____.665, the Administrator shall notify ETA and the Attorney General of the occurrence of a violation by the attesting employer or of the non-attesting employer's ineligibility for the automated vessel exception.

§ _____.630 Request for hearing.

(a) Any interested party desiring to request an administrative hearing on a determination issued pursuant to §§ _____.605 and _____.625 of this part shall make such request in writing to the Chief Administrative Law Judge at the address stated in the notice of determination.

(b) Interested parties may request a hearing in the following circumstances:

(1) The complainant or any other interested party may request a hearing where the Administrator determines, after investigation, that there is no basis for a finding that an attesting employer has committed violation(s) or that the employer is eligible for the automated vessel exception. In such a proceeding, the requesting party and the employer shall be parties; the Administrator may intervene as a party or appear as *amicus curiae* at any time in the proceeding, at the Administrator's discretion.

(2) The employer or any other interested party may request a hearing where the Administrator determines, after investigation, that there is a basis for a finding that an attesting employer has committed violation(s) or that a non-attesting employer is not eligible for the automated vessel exception. In such a proceeding, the Administrator and the employer shall be parties.

(c) No particular form is prescribed for any request for hearing permitted by this section. However, any such request shall:

(1) Be dated;

(2) Be typewritten or legibly written;

(3) Specify the issue or issues stated in the notice of determination giving rise to such request;

(4) State the specific reason or reasons why the party requesting the hearing believes such determination is in error;

(5) Be signed by the party making the request or by an authorized representative of such party; and

(6) Include the address at which such party or authorized representative desires to receive further communications relating thereto.

(d) The request for such hearing must be received by the Chief Administrative Law Judge, at the address stated in the Administrator's notice of determination, no later than 15 calendar days after the date of the determination. An interested party that fails to meet this 15-day deadline for requesting a hearing may thereafter participate in the proceedings only by consent of the administrative law judge, either through intervention as a party pursuant to 29 CFR 18.10 (b) through (d) or through participation as an *amicus curiae* pursuant to 18 CFR 18.12.

(e) The request may be filed in person, by facsimile transmission, by certified or regular mail, or by courier service. For the requesting party's protection, if the request is filed by mail, it should be certified mail. If the request is filed by facsimile transmission, the original of the request, signed by the requestor or authorized representative, shall be filed within ten days.

(f) Copies of the request for a hearing shall be sent by the requestor to the Wage and Hour Division official who issued the Administrator's notice of determination, to the representative(s) of the Solicitor of Labor identified in the notice of determination, and to all known interested parties.

§_____.635 Rules of practice for administrative law judge proceedings.

(a) Except as specifically provided in this subpart, and to the extent they do not conflict with the provisions of this subpart, the "Rules of Practice and Procedure for Administrative Hearings Before the Office of Administrative Law Judges" established by the Secretary at 29 CFR part 18 shall apply to administrative proceedings under this subpart.

(b) As provided in the Administrative Procedure Act, 5 U.S.C. 556, any oral or documentary evidence may be received in proceedings under this part. The Federal Rules of Evidence and subpart B of the Rules of Practice and Procedure for Administrative Hearings Before the Office of Administrative Law Judges (29 CFR part 18, subpart B) shall not apply, but principles designed to ensure production of relevant and probative evidence shall guide the admission of evidence. The administrative law judge may exclude evidence which is immaterial, irrelevant, or unduly repetitive.

§_____.640 Service and computation of time.

(a) Under this subpart, a party may serve any pleading or document by regular mail. Service on a party is complete upon mailing to the last known address or, in the case of the attesting employer, to the employer's designated representative in the U.S. No additional time for filing or response is authorized where service is by mail. In the interest of expeditious proceedings, the administrative law judge may direct the parties to serve pleadings or documents by a method other than regular mail.

(b) Two (2) copies of all pleadings and other documents in any administrative law judge proceeding shall be served on the attorneys for the Administrator. One copy shall be served on the Associate Solicitor, Division of Fair Labor Standards, Office of the Solicitor, U.S. Department of Labor, 200 Constitution Avenue NW., Washington, DC 20210, and one copy on the attorney representing the Administrator in the proceeding.

(c) Time will be computed beginning with the day following the action and includes the last day of the period unless it is a Saturday, Sunday, or federally-observed holiday, in which case the time period includes the next business day.

§_____.645 Administrative law judge proceedings.

(a) Upon receipt of a timely request for a hearing filed pursuant to and in accordance with §_____.630 of this part, the Chief Administrative Law Judge shall promptly appoint an administrative law judge to hear the case.

(b) Within seven calendar days following the assignment of the case, the administrative law judge shall notify all interested parties of the date, time and place of the hearing. All parties shall be given at least fourteen calendar days notice of such hearing.

(c) The date of the hearing shall be not more than 60 calendar days from the date of the Adminstrator's determination. Because of the time constraints imposed by the Act, no requests for postponement shall be granted except for compelling reasons. Even if such reasons are shown, no extension of the hearing date beyond 60 days from the date of the Administrator's determination shall be granted except by consent of all the parties to the proceeding.

(d) The Administrative Law Judge may prescribe a schedule by which the parties are permitted to file a prehearing brief or other written statement of fact or law. Any such brief or statement shall be served upon each other party in accordance with §_____.640 of this part. Posthearing briefs will not be permitted except at the request of the administrative law judge. When permitted, any such brief shall be limited to the issue or issues specified by the administrative law judge, shall be due within the time prescribed by the administrative law judge, and shall be served on each other party in accordance with _____.640 of this part.

(e) In reaching a decision, the administrative law judge shall, in accordance with the Act, impose the following burden of proof—

(1) The attesting employer shall have the burden of producing facts and evidence to establish the matters required by the attestation at issue;

(2) The burden of proof as to the applicability of the automated vessel exception shall be on the party to the hearing who is asserting that the employer is not eligible for the exception.

(f) The administrative law judge proceeding shall not be an appeal or

review of the Administrator's ruling on a request for a cease and desist order pursuant to § _____.615.

§ _____.650 Decision and order of administrative law judge.

(a) Within 90 calendar days after receipt of the transcript of the hearing, the administrative law judge shall issue a decision.

(b) The decision of the administrative law judge shall include a statement of findings and conclusions, with reasons and basis therefor, upon each material issue presented on the record. The decision shall also include an appropriate order which may affirm, deny, reverse, or modify, in whole or in part, the determination of the Administrator; the reason or reasons for such order shall be stated in the decision. The administrative law judge shall not render determinations as to the legality of a regulatory provision or the constitutionality of a statutory provision.

(c) The decision shall be served on all parties in person or by certified or regular mail.

§ _____.655 Secretary's review of administrative law judge's decision.

(a) The Administrator or any interested party desiring review of the decision and order of an administrative law judge shall petition the Secretary to review the decision and order. To be effective, such petition shall be received by the Secretary within 30 calendar days of the date of the decision and order. Copies of the petition shall be served on all parties and on the administrative law judge.

(b) No particular form is prescribed for any petition for Secretary's review permitted by this subpart. However, any such petition shall:

(1) Be dated;

(2) Be typewritten or legibly written;

(3) Specify the issue or issues stated in the administrative law judge decision and order giving rise to such petition;

(4) State the specific reason or reasons why the party petitioning for review believes such decision and order are in error;

(5) Be signed by the party filing the petition or by an authorized representative of such party;

(6) Include the address at which such party or authorized representative desires to receive further communications relating thereto; and

(7) Attach copies of the administrative law judge's decision and order, and any other record documents which would assist the Secretary in determining whether review is warranted.

(c) Whenever the Secretary determines to review the decision and order of an administrative law judge, a notice of the Secretary's determination shall be served upon the administrative law judge and upon all parties to the proceeding within 30 calendar days after the Secretary's receipt of the petition for review.

(d) Upon receipt of the Secretary's notice, the Office of Administrative Law Judges shall within fifteen calendar days forward the complete hearing record to the Secretary.

(e) The Secretary's notice may specify:

(1) The issue or issues to be reviewed;

(2) The form in which submissions shall be made by the parties (*e.g.*, briefs);

(3) The time within which such submissions shall be made.

(f) All documents submitted to the Secretary shall be filed with the Secretary of Labor, U.S. Department of Labor, Washington, DC 20210, Attention: Executive Director, Office of Administrative Appeals, room S–4309. An original and two copies of all documents shall be filed. Documents are not deemed filed with the Secretary until actually received by the Secretary. All documents, including documents filed by mail, shall be received by the Secretary either on or before the due date.

(g) Copies of all documents filed with the Secretary shall be served upon all other parties involved in the proceeding. Service upon the Administrator shall be in accordance with § _____.640(b) of this part.

(h) The Secretary's final decision shall be issued within 180 calendar days from the date of the notice of intent to review. The Secretary's decision shall be served upon all parties and the administrative law judge.

(i) Upon issuance of the Secretary's decision, the Secretary shall transmit the entire record to the Chief Administrative Law Judge for custody pursuant to § _____.660 of this part.

§ _____.660 Administrative record.

The official record of every completed administrative hearing procedure provided by subparts F and G of this part shall be maintained and filed under the custody and control of the Chief Administrative Law Judge. Upon receipt of a complaint seeking review of the final agency action in a United States District Court, the Chief Administrative Law Judge shall certify the official record and shall transmit such record to the clerk of the court.

§ _____.665 Notice to the Attorney General and the Employment and Training Administration.

(a) The Administrator shall promptly notify the Attorney General and ETA of the entry of a cease and desist order pursuant to § _____.615 of this part. The order shall remain in effect until the completion of the Administrator's investigation and any subsequent proceedings pursuant to § _____.630 of this part, unless the Administrator notifies the Attorney General and ETA of the entry of a subsequent order lifting the prohibition.

(1) The Attorney General, upon receipt of notification from the Administrator that a cease and desist order has been entered against an employer:

(i) Shall not permit the vessels owned or chartered by the attesting employer to use alien crewmembers to perform the longshore activity(ies) at the port specified in the cease and desist order;

(ii) Shall, in the case of an employer seeking to utilize the automated vessel exception, require that such employer not use alien crewmembers to perform the longshore activity(ies) at the port specified in the cease and desist order, without having on file with ETA an attestation pursuant to § _____.520 of this part.

(2) ETA, upon receipt of the Administrator's notice shall, in the case of an attesting employer, suspend the employer's attestation for the activity(ies) and port specified in the cease and desist order.

(b) The Administrator shall notify the Attorney General and ETA of the final determination of a violation by an attesting employer or of the ineligibility of an employer for the automated vessel exception, upon the earliest of the following events:

(1) Where the Administrator determines that there is a basis for a finding of violation by an attesting employer or a finding of nonapplicability of the automated vessel exception, and no timely request for hearing is made pursuant to § _____.630 of this part;

(2) Where, after a hearing, the administrative law judge issues a decision and order finding a violation by an attesting employer or finding inapplicable the automated vessel exception; or

(3) Where the administrative law judge finds that there was no violation by an attesting employer or that the automated vessel exception does apply, and the Secretary, upon review, issues a decision pursuant to § _____.655 of this part, holding that a violation was

committed by an attesting employer or holding that the automated vessel exception does not apply.

(c) The Attorney General, upon receipt of notification from the Administrator pursuant to paragraph (b) of this section:

(1) Shall not permit the vessels owned or chartered by the attesting employer to enter any port of the U.S. for a period of up to one year;

(2) Shall, in the case of an employer determined to be ineligible for the automated vessel exception, thereafter require that such employer not use alien crewmember(s) to perform the longshore activity(ies) at the specified port without having on file with ETA an attestation pursuant to § _____.520 of this part;

(3) Shall, in the event that the Administrator's notice constitutes a conclusive determination (pursuant to § _____.670) that the prevailing practice at a particular U.S. port does not permit the use of nonimmigrant alien crewmembers for particular longshore activity(ies), thereafter permit no employer to use alien crewmembers for the particular longshore activity(ies) at that port.

(d) ETA, upon receipt of the Administrator's notice pursuant to paragraph (b) of this section:

(1) Shall, in the case of an attesting employer, suspend the employer's attestation for the port at issue and for any other U.S. port, and shall not accept for filing any attestation submitted by the employer for a period of 12 months or for a shorter period if such is specified for that employer by the Attorney General;

(2) Shall, if the Administrator's notice constitutes a conclusive determination (pursuant to § _____.670) that the prevailing practice at a particular U.S. port does not permit the use of alien crewmembers for the longshore activity(ies), thereafter accept no attestation from any employer for the performance of the activity(ies) at that port, and shall invalidate any current attestation for any employer for the performance of the activity(ies) at that port.

§ _____.670 Federal Register notice of determination of prevailing practice.

(a) Pursuant to § _____.625(b), the Administrator shall publish in the **Federal Register** a notice of the Administrator's determination of any investigation regarding the prevailing practice for the use of alien crewmembers for particular longshore activity(ies) in a particular U.S. port (whether under an attestation or under the automated vessel exception). Where the Administrator has determined that the prevailing practice in that U.S. port does not permit such use of alien crewmembers, and no timely request for a hearing is filed pursuant to § _____.630, the Administrator's determination shall be the conclusive determination for purposes of the Act and subparts F and G of this part; the Attorney General and ETA shall, upon notice from the Administrator, take the actions specified in § _____.665. Where the Administrator has determined that the prevailing practice in that U.S. port at the time of the investigation permits such use of alien crewmembers, the Administrator shall, in any subsequent investigation, give that determination appropriate weight, unless the determination is reversed in proceedings under §§ _____.630 or § _____.655.

(b) Where an interested party, pursuant to § _____.630, requests a hearing on the Administrator's determination, the Administrator shall, upon the issuance of the decision of the administrative law judge, publish in the **Federal Register** a notice of the judge's decision as to the prevailing practice for the longshore activity(ies) and U.S. port at issue, if the Administrative Law Judge:

(1) Reversed the determination of the Administrator published in the **Federal Register** pursuant to paragraph (a) of this section; or

(2) Determines that the prevailing practice for the particular activity in the port does not permit the use of alien crewmembers.

(c) If the administrative law judge determines that the prevailing practice in that port does not permit such use of alien crewmembers, the judge's decision shall be the conclusive determination for purposes of the Act and subparts F and G of this part (unless and until reversed by the Secretary on discretionary review pursuant to § _____.655). The Attorney General and ETA shall upon notice from the Administrator, take the actions specified in § _____.665.

(d) In the event that the Secretary, upon discretionary review pursuant to § _____.655, issues a decision that reverses the administrative law judge on a matter on which the Administrator has published notices in the **Federal Register** pursuant to paragraphs (a) and (b) of this section, the Administrator shall publish in the **Federal Register** a notice of the Secretary's decision and shall notify the Attorney General and ETA.

(1) Where the Secretary reverses the administrative law judge and determines that, contrary to the judge's decision, the prevailing practice for the longshore activity(ies) in the U.S. port at issue does not permit the use of alien crewmembers, the Secretary's decision shall be the conclusive determination for purposes of the Act and subparts F and G of this part. Upon notice from the Administrator, the Attorney General and ETA shall take the actions specified in § _____.655.

(2) Where the Secretary reverses the administrative law judge and determines that, contrary to the judge's decision, the use of alien crewmembers is permitted by the prevailing practice for the longshore activity(ies) in the U.S. port at issue, the judge's decision shall no longer have the conclusive effect specified in paragraph (b) of this section. Upon notice from the Administrator, the Attorney General and ETA shall cease the actions specified in § _____.665.

§ _____.675 Non-applicability of the Equal Access to Justice Act.

A proceeding under subpart G of this part is not subject to the Equal Access to Justice Act, as amended, 5 U.S.C. 504. In such a proceeding, the administrative law judge shall have no authority to award attorney fees and/or other litigation expenses pursuant to the provisions of the Equal Access to Justice Act.

Adoption of the Joint Final Rule

The agency specific adoption of the joint final rule, which appears at the end of the common preamble, appears below:

TITLE 20—EMPLOYEES' BENEFITS

CHAPTER V—EMPLOYMENT AND TRAINING ADMINISTRATION, DEPARTMENT OF LABOR

Accordingly, the interim final rule published at 56 FR 24648 (May 30, 1991) is adopted as the final rule, and chapter V of title 20, Code of Federal Regulations, is further amended as follows:

PART 655—TEMPORARY EMPLOYMENT OF ALIENS IN THE UNITED STATES

1. The Authority citation for part 655 is revised to read as follows:

Authority: Section 655.0 issued under 8 U.S.C. 1101(a)(15)(H)(i) and (ii), 1182(m) and (n), 1184, 1188, and 1288(c); 29 U.S.C. 49 *et seq.*; sec. 3(c)(1), Pub. L. 101–238, 103 Stat. 2099, 2103 (8 U.S.C. 1182 note); sec. 221(a), Pub. L. 101–649, 104 Stat. 4978, 5027 (8 U.S.C. 1184 note); and 8 CFR 214.2(h)(4)(i).

Section 655.00 issued under 8 U.S.C. 1101(a)(15)(H)(ii), 1184, and 1188; 29 U.S.C. 49 *et seq.*; and 8 CFR 214.2(h)(4)(i).

Subparts A and C issued under 8 U.S.C. 1101(a)(15)(H)(ii)(b) and 1184; 29 U.S.C. 49 *et seq.*; and 8 CFR 214.2(h)(4)(i).

Subpart B issued under 8 U.S.C. 1101(a)(15)(H)(ii)(a), 1184, and 1188; and 29 U.S.C. 49 *et seq.*

Subparts D and E issued under 8 U.S.C. 1101(a)(15)(H)(i)(a), 1182(m), and 1184; 29 U.S.C. 49 *et seq.*; and sec. 3(c)(1), Pub. L. 101–238, 103 Stat. 2099, 2103 (8 U.S.C. 1182 note).

Subparts F and G issued under 8 U.S.C. 1184 and 1288(c); and 29 U.S.C. 49 *et seq.*

Subparts H and I issued under 8 U.S.C. 1101(a)(15)(H)(i)(b), 1182(n), and 1184; 29 U.S.C. 49 *et seq.*; and sec. 303(a)(8), Pub. L. 102–232, 105 Stat. 1733, 1748 (8 U.S.C. 1182 note).

Subparts J and K issued under 29 U.S.C. 49 *et seq.*; and sec. 221(a), Pub. L. 101–649, 104 Stat. 4978, 5027 (8 U.S.C. 1184 note).

2. Part 655 is amended by revising Subparts F and G to read as set forth in the joint final rule above in this document.

Subpart F—Attestations by Employers Using Alien Crewmembers for Longshore Activities in U.S. Ports

Sec.

655.500 Purpose, procedure and applicability of Subparts F and G of this part.
655.501 Overview of responsibilities.
655.502 Definitions.
655.510 Employer attestations.
655.520 Special provision regarding automated vessels.
655.550 Public access.

Appendix A to Subpart F—U.S. Seaports

Subpart G—Enforcement of the Limitations Imposed on Employers Using Alien Crewmembers for Longshore Activities in U.S. Ports

Sec.

655.600 Enforcement authority of Administrator, Wage and Hour Division.
655.605 Complaints and investigative procedures.
655.610 Automated vessel exception to prohibition on utilization of alien crewmembers to perform longshore activity(ies) at a U.S. port.
655.615 Cease and desist order.
655.620 Civil money penalties and other remedies.
655.625 Written notice, service and **Federal Register** publication of Administrator's determination.
655.630 Request for hearing.
655.635 Rules of practice for administrative law judge proceedings.
655.640 Service and computation of time.
655.645 Administrative law judge proceedings.
655.650 Decision and order of administrative law judge.
655.655 Secretary's review of administrative law judge's decision.
655.660 Administrative record.
655.665 Notice to the Attorney General and the Employment and Training Administration.
655.670 **Federal Register** notice of determination of prevailing practice.
655.675 Non-applicability of the Equal Access to Justice Act.

Authority: Section 655.0 issued under 8 U.S.C. 1101(a)(15)(H) (i) and (ii), 1182 (m) and (n), 1184, 1188, and 1288(c); 29 U.S.C. 49 *et seq.*; sec. 3(c)(1), Pub. L. 101–238, 103 Stat. 2099, 2103 (8 U.S.C. 1182 note); sec. 221(a), Pub. L. 101–649, 104 Stat. 4978, 5027 (8 U.S.C. 1184 note); and 8 CFR 214.2(h)(4)(i).

Section 655.00 issued under 8 U.S.C. 1101(a)(15)(H)(ii), 1184, and 1188; 29 U.S.C. 49 *et seq.*; and 8 CFR 214.2(h)(4)(i).

Subparts A and C issued under 8 U.S.C. 1101(a)(15)(H)(ii)(b) and 1184; 29 U.S.C. 49 *et seq.*; and 8 CFR 214.2(h)(4)(i).

Subpart B issued under 8 U.S.C. 1101(a)(15)(H)(ii)(a), 1184 and 1188; 29 U.S.C. 49 *et seq.*

Subparts D and E issued under 8 U.S.C. 1101(a)(15)(H)(i)(a), 1182(m), and 1184; 29 U.S.C. 49 *et seq.*; and sec. 3(c)(1), Pub. L. 101–238, 103 Stat. 2099, 2103 (8 U.S.C. 1182 note).

Subparts F and G issued under 8 U.S.C. 1184 and 1288(c); and 29 U.S.C. 49 *et seq.*

Subparts H and I issued under 8 U.S.C. 1101(a)(15)(H)(i)(b), 1182(n), and 1184; 29 U.S.C. 49 *et seq.*; and sec. 303(a)(8), Pub. L. 102–232, 105 Stat. 1733, 1748 (8 U.S.C. 1182 note).

Subparts J and K issued under 29 U.S.C. 49 *et seq.*; and sec. 221(a), Pub. L. 101–649, 104 Stat. 4978, 5027 (8 U.S.C. 1184 note).

Signed at Washington, DC, this 1st day of September, 1992.

Roberts T. Jones,

Assistant Secretary for Employment and Training.

Cari M. Dominguez,

Assistant Secretary for Employment Standards.

Lynn Martin,

Secretary of Labor.

TITLE 29—LABOR

CHAPTER V—WAGE AND HOUR DIVISION, DEPARTMENT OF LABOR

Accordingly, the interim final rule published at 56 FR 24648 (May 30, 1991) is adopted as the final rule, and part 506 of title 29, Code of Federal Regulations, is further amended by revising subparts F and G to read as set forth in the joint final rule above in this document:

PART 506—ATTESTATIONS BY EMPLOYERS USING ALIEN CREWMEMBERS FOR LONGSHORE ACTIVITIES IN U.S. PORTS

Subparts A, B, C, D, and E—[Reserved]

Subpart F—Attestations by Employers Using Alien Crewmembers for Longshore Activities in U.S. Ports

Sec.

506.500 Purpose, procedure and applicability of subparts F and G of this part.
506.501 Overview of responsibilities.
506.502 Definitions.
506.510 Employer attestations.
506.520 Special provisions regarding automated vessels.
506.550 Public access.

Appendix A to Subpart F—U.S. Seaports

Subpart G—Enforcement of the Limitations Imposed on Employers Using Alien Crewmembers for Longshore Activities in U.S. Ports

Sec.

506.600 Enforcement authority of Administrator, Wage and Hour Division.
506.605 Complaints and investigative procedures.
506.610 Automated vessel exception to prohibition on utilization of alien crewmembers to perform longshore activity(ies) at a U.S. port.
506.615 Cease and desist order.
506.620 Civil money penalties and other remedies.
506.625 Written notice, service and **Federal Register** publication of Administrator's determination.
506.630 Request for hearing.
506.635 Rules of practice for administrative law judge proceedings.
506.640 Service and computation of time.
506.645 Administrative law judge proceedings.
506.650 Decision and order of administrative law judge.
506.655 Secretary's review of administrative law judge's decision.
506.660 Administrative record.
506.665 Notice to the Attorney General and the Employment and Training Administration.
506.670 **Federal Register** notice of determination of prevailing practice.
506.675 Non-applicability of the Equal Access to Justice Act.

Authority: 8 U.S.C. 1288(c).

Signed at Washington, DC, this 1st day of September, 1992.

Roberts T. Jones,

Assistant Secretary for Employment and Training.

Cari M. Dominguez,

Assistant Secretary for Employment Standards.

Lynn Martin,

Secretary of Labor.

BILLING CODES 4510-30-M and 4510-27-M

Appendix—Form ETA 9033

Note: This appendix will not appear in the Code of Federal Regulations.

Attestation by Employers Using Alien Crewmembers for Longshore Activities in U.S. Ports

U.S. Department of Labor
Employment and Training Administration
U.S. Employment Service

1. Full Legal Name of Company	5. Name of U.S. Agent	OMB Approval No. 1205-0309 Expires: 07/31/95
2. Headquarters Address (No., St., City, Town, State, ZIP Code, Country)	6. U.S. Business Address of Agent (No., St., City, State, ZIP Code)	
3. Telephone (Area Code and Number)	7. Telephone (Area Code and Number)	
4. Name of Chief Executive Officer	Fax (Area Code and Number)	

8. EMPLOYER ATTESTATION

☐ There is no collective bargaining agreement in effect in the port covering at least 30 percent of the longshore workers.

(If accompanying documentation supporting each one of the following three attestation elements (8(a), 8(b), and 8(c)) is not attached, attestation will be deemed incomplete and will be returned without action.)

☐ (a) Alien crewmembers will be used beginning _____ (Month/Day/Year) to perform the following activities of longshore work at the port of _____ (Name of Port, City, and State), and it is the prevailing practice to use alien crewmembers for each of the following activities to be performed at this port, i.e., those marked "Yes" **(a "Yes" or "No" box must be checked for each activity):**

Yes	No		
☐	☐	(i)	Loading cargo
☐	☐	(ii)	Unloading cargo
☐	☐	(iii)	Operation of cargo-related equipment
☐	☐	(iv)	Handling of mooring lines
☐		(v)	Check this box if claiming an unanticipated emergency **(include documentation to support claim).**

☐ (b) On the date this attestation is signed and submitted, there is not a strike or lockout in the course of a labor dispute at this port and, during the period of this attestation's validity, I will not use alien crewmembers in my employ to perform any longshore activity during a strike or lockout; and the employment of such aliens is not intended or designed to influence an election for a bargaining representative for longshore workers at the port.

☐ (c) As of this date, notice of this attestation has been provided to longshore workers in the port by (check appropriate box):

☐ (i) Notice of this filing has been provided to the bargaining representative of longshore workers in the port (include copy of actual notice); or

☐ (ii) Where there is no such bargaining representative, notice of this filing has been provided to the port authority, and to longshore workers employed at the port through posting in conspicuous locations (include copy of actual notice posted).

9. DECLARATION OF EMPLOYER:

Pursuant to 28 U.S.C. 1746, I declare under penalty of perjury that the information provided on this form and accompanying documentation is true and correct. In addition, I declare that I will comply with the Department of Labor regulations governing this program and, in particular, that I will make this attestation, supporting documentation, and other records, files and documents available to officials of the Department of Labor, upon such official's request, during any investigation under this attestation or the Immigration and Nationality Act.

_____ _____
Signature of Chief Executive Officer (or Such Officer's U.S. Agent or Designee) Date

FOR U.S. GOVERNMENT AGENCY USE ONLY: By virtue of my signature below, I acknowledge that this attestation is accepted for filing on _____ (date) and will be valid for the longshore activities herein attested to from _____ (beginning date) through _____ (date twelve months from beginning date).

_____ _____
Signature of Authorized DOL Official ETA Case No.

Subsequent DOL action: Suspended _____ Invalidated _____ Withdrawn _____

The Department of Labor is not the guarantor of the accuracy, truthfulness or adequacy of an attestation accepted for filing.

Public reporting burden for this collection of information is estimated to average 4 hours per response, including the time for reviewing instructions, searching existing data sources, gathering and maintaining the data needed, and completing and reviewing the collection of information. Send comments regarding this burden estimate or any other aspect of this collection of information, including suggestions for reducing this burden, to the Office of IRM Policy, Department of Labor, Room N1301, 200 Constitution Avenue, N.W., Washington, D.C. 20210; and to the Office of Management and Budget, Paperwork Reduction Project (1205-0309) Washington, D.C. 20503.

DO NOT SEND THE COMPLETED FORM TO EITHER OF THESE OFFICES

ETA 9033 (Aug. 1992)

INSTRUCTIONS FOR COMPLETING FORM ETA 9033
ATTESTATION BY EMPLOYERS USING ALIEN CREWMEMBERS
FOR LONGSHORE ACTIVITIES AT U.S. PORTS

IMPORTANT: READ CAREFULLY BEFORE COMPLETING FORM

An employer may file an attestation only when there is no collective bargaining agreement in effect in the local port covering at least 30 percent of the number of individuals employed in performing longshore work. Submit the completed original Form ETA 9033 along with two copies of the form and two sets of accompanying documentation. Attestations must be received by the Employment and Training Administration, Alien Certification Unit, no later than 14 days prior to the first performance of the longshore activity unless the employer is claiming an unanticipated emergency. Attestations for ports located on the Atlantic Coast, Puerto Rico, and the Virgin Islands, must be submitted to the Boston Regional Office at One Congress Street, 10th Floor, Boston, Massachusetts 02114; attestations for ports located on the Pacific Coast, Alaska, Hawaii, and Guam, must be submitted to the Seattle Regional Office at 1111 3rd Avenue, Suite 900, Seattle, Washington 98101; attestations for ports located on the Gulf of Mexico must be submitted to the Dallas Regional Office at Federal Building, Room 317, 525 Griffin Street, Dallas, Texas 75202; and attestations for ports located on the Great Lakes must be submitted to the Chicago Regional Office at 230 S. Dearborn Street, 6th Floor, Chicago, Illinois 60604.

To knowingly furnish any false information in the preparation of this form and any supporting documentation thereto, or to aid, abet or counsel another to do so is a felony, punishable by $10,000 fine or five years in the penitentiary, or both (18 U.S.C. 1001). Other penalties apply as well to fraud and misuse of this immigration document (18 U.S.C. 1546) and to perjury with respect to this form (18 U.S.C. 1546 and 1621).

Print legibly in ink or use a typewriter. Sign and date one form in original signature. Citations below to "regulations" are citations to the identical provisions at 20 CFR Part 655, Subparts F and G, and at 29 CFR Part 506, Subparts F and G.

Item 1. Name of Company. Enter full legal name of business, firm or organization, or, if an individual, enter name used for legal purposes on documents.

Item 2. Address of Company. Self Explanatory.

Item 3. Telephone Number. Include area code or international calling code.

Item 4. Name of Chief Executive Officer. Self explanatory.

Item 5. Name of U.S. Agent. Self explanatory.

Item 6. Address of Agent. This address must be in the U.S.

Item 7. Telephone Number. Include fax number, if available.

Item 8. Employer Attestation. In order to be eligible to use alien crewmembers for longshore activities at a U.S. port, an employer must attest that there is no collective bargaining agreement in effect in the local port covering at least 30 percent of individuals employed in performing longshore work. An employer is not required to submit documentation to support this condition. An employer must also attest to the conditions listed in elements (a) through (c). The attestation will only be accepted for filing if the required documentation supporting these elements is attached to the Form ETA 9033. See § ___ .510(d) through (f) of the regulations for guidance on the documentation that must be attached to the Form ETA 9033 to support each of the elements.

Item 8(a). Prevailing Practice. The employer must attest that it is the prevailing practice to use alien crewmembers for a particular activity of longshore work at the U.S. port where the employer intends to employ alien crewmembers. The employer must include the date of the first performance of the longshore activity. If claiming an unanticipated emergency, the appropriate box must be checked. The employer must also include the name of the port, and the city and state in which it is located. Longshore work is defined as activity relating to (1) loading of cargo, (2) unloading of cargo, (3) operation of cargo-related equipment, and (4) handling of mooring lines on the dock when a vessel is made fast or let go. For each activity, the employer must check either the "Yes" or "No" box, depending on whether the employer intends to perform such activity. The employer must attach documentation to support each activity it intends to perform under this attestation element. See § —— .510(d) for detailed explanation.

Item 8(b). No Strike or Lockout; No Intention or Design to Influence Bargaining Representative Election. The employer must attest that, at the time of submitting the attestation, there is not a strike or lockout in the course of a labor dispute covering the employer's activity, and that it will not use alien crewmembers during a strike or lockout after filing the attestation. The employer must also attest that the employment of such aliens is not intended or designed to influence an election for a bargaining representative for workers in the local port. The employer must attach documentation to support this attestation element. See § ___.510(e) for detailed explanation.

Item 8(c). Notice of filing. The employer must attest that at the time of filing the attestation, notice of filing has been provided to the bargaining representative of the longshore workers in the local port, or, where there is no such bargaining representative, notice of the filing has been provided to longshore workers employed at the local port through posting in conspicuous locations and through other appropriate means. The employer must check the appropriate box under 8(c). The employer must attach documentation to support this attestation element. See § ___.510(f) for detailed explanation.

Item 9. Declaration of Employer. One copy of this form must bear the original signature of the chief executive officer (or the chief executive officer's designee) unless filing by facsimile transmission. See § ___ .510(c)(1) of the regulations if filing by facsimile transmission. By signing this form, the chief executive officer is attesting to the conditions listed in items 8(a) through (c) and to the accuracy of the information provided elsewhere on the form and in the supporting documentation. False statements are subject to Federal criminal penalties, as stated above.

If the attestation bears the necessary entries of information and documentation, the Department of Labor may accept the attestation for filing and shall document such acceptance on each of the three Form ETA 9033's submitted. A copy of the attestation form indicating the Department's acceptance, or notification of nonacceptance, will be returned to the employer. The employer may then use alien crewmembers for longshore work at the port for which this attestation has been accepted in accordance with Immigration and Naturalization Service regulations, unless the Department subsequently acts to suspend or invalidate the attestation.

A copy of this attestation, along with accompanying documentation, will be available for public inspection at the Division of Foreign Labor Certifications, United States Employment Service, Room N-4456, 200 Constitution Avenue, N.W., Washington, D.C. 20210.

federal register

Tuesday
September 8, 1992

Part IV

Department of Education

Research in Education of Individuals With Disabilities Program; Technology, Educational Media, and Materials; Notice

DEPARTMENT OF EDUCATION

Research in Education of Individuals With Disabilities Program; Technology, Educational Media, and Materials for Individuals With Disabilities Program

AGENCY: Department of Education.

ACTION: Notice of proposed funding priorities for fiscal years 1993 and 1994.

SUMMARY: The Secretary proposes priorities for fiscal years 1993 and 1994 for two programs under the Office of Special Education and Rehabilitative Services. To ensure wide and effective use of program funds, the Secretary proposes to select from among these program priorities in order to fund the areas of greatest need for fiscal years 1993 and 1994. A separate competition will be established for each priority that is selected.

DATES: Comments must be received on or before October 8, 1992 for the Technology, Educational Media, and Materials for Individuals with Disabilities Program; and November 9, 1992 for the Research in Education of Individuals with Disabilities Program.

ADDRESSES: All comments concerning these proposed priorities should be addressed to: Linda Glidewell, U.S. Department of Education, 400 Maryland Avenue SW., room 3095, Switzer Building, Washington, DC 20202–2640.

FOR FURTHER INFORMATION CONTACT: Linda Glidewell. Telephone: (202) 732–1099. Deaf and hard of hearing individuals may call (202) 732–6153.

SUPPLEMENTARY INFORMATION: This notice contains proposed priorities under the following programs: Research in Education of Individuals with Disabilities Program; and the Technology, Educational Media, and Materials for Individuals with Disabilities Program. The purpose of each program is stated separately under the title of that program. The Secretary will announce the final priorities in a notice in the **Federal Register**. The final priorities will be determined by responses to this notice, available funds, and other considerations of the Department. Funding of particular projects depends on the final priorities, availability of funds, and the quality of the applications received. The publication of these proposed priorities does not preclude the Secretary from proposing additional priorities, nor does it limit the Secretary to funding only these priorities, subject to meeting applicable rulemaking requirements.

Note: This notice of proposed priorities does *not* solicit applications. Notices inviting applications under these competitions will be published in the **Federal Register** concurrent with or following publication of the notices of final priorities.

These proposed priorities support AMERICA 2000, the President's strategy for moving the Nation toward the National Education Goals, by improving our understanding of how to enable children and youth with disabilities to reach the high levels of academic achievement called for by the National Education Goals.

Title of Program: Research in Education of Individuals with Disabilities Program.

Purpose of Program: The Research in Education of Individuals with Disabilities Program, authorized by Part E of the Individuals with Disabilities Education Act (20 U.S.C. 1441–1443), provides (1) support to advance and improve the knowledge base and improve the practice of professionals, parents, and others providing early intervention, special education, and related services, including professionals in regular education environments, to provide children with disabilities effective instruction and enable them to successfully learn; and (2) support for research and related purposes, surveys, or demonstrations relating to physical education or recreation, including therapeutic recreation, for infants, toddlers, children, and youth with disabilities.

Priorities

Under 34 CFR 75.105(c)(3), the Secretary proposes to give an absolute preference to applications that meet one of the following priorities. The Secretary proposes to fund under these competitions only applications that meet one of these absolute priorities:

Proposed Priority 1—Interventions To Support Junior High School Aged Students Who Are at Risk of Dropping out of School (CFDA 84.023)

Background

One of the National Education Goals is to increase the high school graduation rate to at least 90 percent by the year 2000. The current graduation rate for children with disabilities, 41 percent, falls substantially below the average for all children and well below the national goal of 90 percent (National Longitudinal Study, 1991). The findings of recent research and the consistently very poor rates of high school completion reported by States for children with disabilities support the need for research to develop and implement interventions that will increase student engagement in school during the year that they become at the greatest risk of dropping out and to evaluate the effectiveness of these interventions on progress towards graduation.

Priority

This proposed priority will support research projects to develop, implement, and evaluate the effectiveness of interventions that increase student engagement in school. Projects must focus on students with learning disabilities and those with serious emotional disturbance.

Site Selection. Project sites must be in schools where the drop-out rate for students with disabilities is significantly higher than for children who are not disabled. Sites must encourage the implementation of school-based interventions within general education settings.

Project Planning. Projects may dedicate up to 12 months to plan for and develop the implementation of interventions with special and general educators, administrators, related service staff, parents, students, community agencies and groups, and others as appropriate. The plan must include activities that develop and maintain ongoing school, community, and family commitment to implement the interventions. Planning activities must include (1) the identification of school, home, and community variables that are related to student engagement in learning and the development of interventions related to these variables; (2) the specification of the procedures and participants required to implement the interventions; and (3) procedures for evaluating the implementation and impact of the interventions and the project. Variables of student engagement must be developed through a consensual process and must include school, home, and community variables that have a significant predictive relationship with student drop-out rates.

Implementation of Interventions. Projects must implement their interventions over a three-year period. Projects must select a cohort of students with learning disabilities and serious emotional disturbance who are enrolled at the seventh through tenth grade level (the "study group"). Interventions must be implemented for these students for three successive years.

Studying Effects and Implementation of the Project. During the first two years of implementation, project effects must be described with respect to the variables of student engagement. Information must be reported longitudinally on a control group of students with learning disabilities and serious emotional disturbance within

the school district ("the control group") who do not receive the interventions. Data collection and analyses must permit the statement of findings for student subgroups reflecting each disability group included in the sample.

Information must also be provided regarding the process and levels of implementation of the project and a description of community, school, and student characteristics.

Collaboration. Projects must work with the other projects funded under this priority and with related projects and must budget for two annual meetings: one with the other grantees under this priority and one of all project directors.

Proposed Priority 2—Increasing Participation in General Education Development Programs (GED) Among Youth With Disabilities (CFDA 84.023)

Background

One of the National Education Goals is to increase the high school graduation rate to at least 90 percent by the year 2000. Forty-one percent of all youth with disabilities drop out of school without completing high school graduation requirements. (National Longitudinal Study, 1991). Nationally, most students who do not complete high school in the traditional fashion eventually obtain a high school diploma through the General Education Development (GED) program. This compares sharply with students with disabilities who have dropped out or withdrawn from school, less than five percent of whom ever receive a diploma.

Having a high school diploma represents one of the most important credentials a young adult must possess to access many of the adult opportunities associated with successful, independent adult outcomes, including for example, access to higher education and competitive employment. The National Longitudinal Study (1991) has provided compelling evidence that there is a consistent gap between students with disabilities who drop out as compared to those who complete high school graduation requirements with respect to several outcomes, and that the discrepancy increases over time.

Priority

This proposed priority will support research projects to develop, implement, and evaluate interventions that will increase the participation in and successful completion of GED programs for students with disabilities who have either withdrawn from or dropped out of school. Projects must focus on students with learning disabilities and those with serious emotional disturbance.

Activities

Site Selection. Project sites must be in schools in communities where the drop-out rate for students with disabilities is significantly higher than for children who are not disabled. Sites must encourage the implementation of school-based interventions within general education settings.

Project Planning. Grantees may dedicate up to 12 months to plan for and develop the implementation of interventions that will increase the successful participation of students with disabilities in GED programs. The plan must be prepared by a group that includes those knowledgeable regarding the needs of students who have withdrawn or dropped out. The plan must include activities that ensure the involvement of GED program staff and others to implement the interventions. The plan must include (1) a site-based, descriptive study of the factors and barriers associated with the decision by young adults with disabilities to seek a GED diploma, and a synthesis describing factors (student, administrative, financial, etc.) related to the successful completion of GED programs by students with disabilities; (2) the new or adapted interventions to be studied; (3) the procedures and participants required to implement the interventions, including how students will be identified and recruited; (4) a description of how a GED program that effectively accommodates the special learning needs and circumstances of youth with disabilities will be developed; and (5) procedures for evaluating the impact of the interventions.

Implementation of Interventions. Projects must implement their interventions and operational plan over a three-year period. Projects must annually select a cohort of youth with disabilities (three cohorts, total) that is participating in the GED program and is 6 months past the compulsory minimum age for exiting from school, as determined by State law or regulations. Information is also to be reported for a control group of students with disabilities within the community, but who are not participating in the GED program.

Studing Effects and Implementation of the Project. During the first two years of implementation, projects must study project effects and the process of implementation of the project. Data collection and analyses must include the statement of findings for student subgroups reflecting each disability area included in the sample. Information describing community, school, and student characteristics must be included.

Collaboration. Projects must work with the other projects funded under this priority and with related projects and must budget for two annual meetings: one with the other grantees under this priority and one of all project directors.

Proposed Priority 3—Enhancing Language Acquisition Among Students Who Are Deaf or Hard of Hearing (CFDA 84.023)

Background

As reported by the Commission on Education of the Deaf (COED), in its 1988 report, Towards Equality, "the educational system has not been successful in assisting the majority of students who are deaf or hard of hearing to achieve reading skills commensurate with those of their hearing peers." Competence in understanding and using vocal, visual, and written language represents an especially critical and difficult accomplishment for children who are deaf or hard of hearing. As the COED report notes, "[a] child without a strong language and communication base faces significant barriers." The findings of this and other recent research and policy studies document the need to enhance the levels of language acquisition for individuals who are deaf or hard of hearing so as to improve levels of achievement and other outcomes.

Priority

This proposed priority will support research projects to evaluate the effectiveness of American Sign Language (ASL) relative to other modes of communication such as signed English in improving achievement in reading and writing for children, 5–18 years of age, who are deaf or hard of hearing.

Activities

Projects must examine achievement in reading and writing, other relevant variables, e.g., other relevant child outcomes (including social and behavioral variables), and the satisfaction of service providers. Project participants must include elementary and secondary-aged students. Project designs must produce information on ASL relative to other modes of communication to which it is being compared by age and achievement level.

Projects must study the effectiveness of using ASL relative to other modes of communication to which it is being compared in relation to the severity of hearing loss, who provides (service provider) the interventions, and where

the interventions are provided (setting). Projects must also study and relate the effectiveness of using ASL and the other interventions to the age of the child at the onset of deafness and time of first intervention, respectively, and the nature and scope of family and community supports. Projects must examine the effectiveness of ASL relative to other modes of communication to which it is being compared in academic and nonacademic settings and in integrated and nonintegrated settings. Service providers may include, for example, parents, hearing or nonhearing peers, and special and regular educators. Projects must report information describing special accommodations, if relevant, associated with using ASL relative to the other modes of communication to which it is being compared in various settings, e.g., within the home or in school environments with normally-hearing children. Projects must also report information describing the appropriate alternative reading and writing assessment systems and procedures that are best suited to document the reading and writing acquisition skills.

Dissemination. Projects must report and exchange their information and findings in formats useable to the research community and to service providers.

Collaboration. Projects must work with the other projects funded under this priority and other related projects and must budget for two annual meetings: One with the other grantees under this priority and one of all project directors.

Title of Program: Technology, Educational Media, and Materials for Individuals with Disabilities Program.

Purpose of Program: The purpose of this program is to support projects and centers for advancing the availability, quality, use, and effectiveness of technology, educational media, and materials in the education of children and youth with disabilities and the provision of early intervention services to infants and toddlers with disabilities. In creating Part G of the Individuals with Disabilities Education Act, Congress expressed the intent that the projects and centers funded under that part should be primarily for the purpose of enhancing research and development advances and efforts being undertaken by the public or private sector, and to provide necessary linkages to make more efficient and effective the flow from research and development to application.

Priority

Under 34 CFR 75.105(c)(3), the Secretary proposes to give an absolute preference to applications that meet the following priority. The Secretary proposes to fund under this competition only applications that meet this absolute priority:

Priority 1—Applications of Assistive Technology for Students who Are Deaf or Hard of Hearing (CFDA 84.180)

Priority

This proposed priority supports projects to develop and demonstrate applications of assistive technology that allow educational programs to be more accessible and appropriate for students who are deaf or hard of hearing, and thus lead to improved outcomes for these students. Assistive technologies have proven capabilities for alleviating some of the problems encountered by students who are deaf or hard of hearing in educational programs. However, continued efforts are needed to develop and improve the technologies themselves, as well as to adapt and apply the technologies in educational programs. An analysis of factors associated with the setting, students, and implementation is also included in this priority.

Activities

Projects must select and specify the population to be addressed—deaf or hard of hearing. Projects must also present an analysis of (1) the student characteristics and environmental factors that interact to produce the need for assistive technology; (2) the functions of the assistive technology that make it appropriate for addressing the needs; and (3) features of the technology (e.g., cost, portability, ease of use, durability) that must be considered in maximizing its usefulness.

Based on the analysis, projects must develop a prototype of the assistive technology application that includes plans and materials for implementation in applied settings. Projects may use new or emerging technologies, components of "off-the-shelf" technologies, and innovations from other sectors (e.g., industry, military).

Possible technology applications include, but are not limited to (1) technologies for translating speech to text or other visual representations of language; (2) improved hearing aid systems for use in educational environments, such as digital signal processing systems; (3) improved systems for providing access to media and communications, such as improved captioning systems; and (4) systems for facilitating communication with teachers, peers, and others.

Demonstration and testing of the prototype must examine (1) the potential of the assistive technology application in addressing the needs of the target population; (2) implementation factors such as cost, technical support, training, and maintenance that must be considered in its use; and (3) impact on the educational outcomes for students who are deaf or hard of hearing.

Dissemination. Projects must disseminate information about the needs addressed by the assistive technology application, implementation factors, design features and principles, and impact on educational outcomes. Projects must, if appropriate, communicate with potential developers and manufacturers for the assistive technology application. Also, projects must budget for an annual meeting of all project directors in Washington, DC.

Intergovernmental Review

The Technology, Educational Media, and Materials for Individuals with Disabilities Program is subject to the requirements of Executive Order 12372 and the regulations in 34 CFR part 79. The objective of the Executive order is to foster an intergovernmental partnership and a strengthened federalism by relying on processes developed by State and local governments for coordination and review of proposed Federal financial assistance.

In accordance with the order, this document is intended to provide early notification of the Department's specific plans and actions for this program.

Invitation to Comment

Interested persons are invited to submit comments and recommendations regarding these proposed priorities.

All comments submitted in response to this notice will be available for public inspection, during and after the comment period, in room 3524, 300 "C" Street SW., Washington, DC, between the hours of 8:30 a.m. and 4 p.m.,

Monday through Friday of each week except Federal holidays.

Applicable Program Regulations: 34 CFR parts 324 and 333. Program Authority: 20 U.S.C. 1441–1443 and 20 U.S.C. 1461.

(Catalog of Federal Domestic Assistance Numbers: 84.023, Research in Education of Individuals with Disabilities Program; and 84.180, Technology, Educational Media, and Materials for Individuals with Disabilities Program)

Dated: September 1, 1992.

Lamar Alexander,

Secretary of Education.

[FR Doc. 92–21462 Filed 9–4–92; 8:45 am]

BILLING CODE 4000–01–M

federal register

Tuesday
September 8, 1992

Part V

Environmental Protection Agency

Effluent Guidelines Plan; Notice

ENVIRONMENTAL PROTECTION AGENCY

[FRL-41966]

RIN 2040-AA90

Effluent Guidelines Plan

AGENCY: Environmental Protection Agency (EPA).

ACTION: Notice of effluent guidelines plan.

SUMMARY: This notice announces the Agency's plan for developing new and revised effluent guidelines, which regulate industrial discharges to surface waters and publicly owned treatment works (POTWs). Section 304(m) of the Clean Water Act requires EPA to publish a biennial Effluent Guidelines Plan.

EFFECTIVE DATE: October 8, 1992.

ADDRESSES: The public record for this notice is available for review in EPA's Headquarters Library, room M2404, 401 M Street SW., Washington, DC. The EPA public information regulation (40 CFR part 2) provides that a reasonable fee may be charged for copying.

FOR FURTHER INFORMATION CONTACT: Eric Strassler, Engineering and Analysis Division (WH-552), U.S. Enviornmental Protection Agency, 401 M Street SW., Washington, DC 20460, telephone 202-260-7150.

SUPPLEMENTARY INFORMATION:

I. Legal Authority
II. Introduction
  A. Purpose of Today's Notice
  B. Overview of Today's Notice
III. 1992 Proposed Effluent Guidelines Plan
IV. 1992 Effluent Guidelines Plan
  A. Regulations
  1. Ongoing Rulemakings
  2. New Rulemakings
  B. Preliminary Studies
  C. Summary of Changes From Proposed Plan
V. Public Comments
  A. Metal Products and Machinery Category
  B. Basis for Conducting Preliminary Studies
  C. Overall Effluent Guidelines Plan
  D. EPA Discretion Not To Regulate Following a Preliminary Study
  E. Clean Water Act Requirements Regarding Toxic and Nonconventional Pollutants
  F. Relationship of Clean Water Act and Pollution Prevention Act
  G. Relative Utility of POTW Local Limits Compared to National Categorical Pretreatment Standards
VI. Future Effluent Guidelines Plans
VII. Economic Impact Assessment; OMB Review
Appendix A—Paragraph 6 of Consent Decree in *NRDC et al. v. Reilly*
Appendix B—Effluent Guidelines Currently Under Development, New Categories To Be Regulated, and Preliminary Studies

I. Legal Authority

This notice is published under the authority of section 304(m) of the Clean Water Act, 33 U.S.C. 1314(m).

II. Introduction

A. Purpose of Today's Notice

Today's notice announces the Agency's second biennial Effluent Guidelines Plan for developing new and revised effluent guidelines pursuant to section 304(m) of the Clean Water Act (CWA).

EPA proposed this plan on May 7, 1992 (57 FR 19748)("Proposed Plan"). The Agency invited comment on the notice until June 8, 1992. Today's notice summarizes and addresses the major comments the Agency received.

B. Overview of Today's Notice

The Agency intends to develop effluent limitation guidelines and standards ("effluent guidelines") as follows:

1. Continue development of the nine ongoing rules: Pulp, Paper and Paperboard; Pesticide Chemicals (Manufacturing); Pesticide Chemicals (Formulating and Packaging); Offshore Oil and Gas Extraction; Coastal Oil and Gas Extraction; Organic Chemicals, Plastics and Synthetic Fibers (Remand); Waste Treatment; Pharmaceutical Manufacturing; and Metal Products and Machinery, Phase 1.

2. Develop effluent guidelines for each of the following point source categories: Waste Treatment, Phase 2; Industrial Laundries; Transportation Equipment Cleaning; and Metal Products and Machinery, Phase 2.

3. Begin approximately two preliminary studies of particular point source categories each year. Each preliminary study will generally take approximately two years to complete.

4. Start development of additional guidelines (either new or revised). Point source categories will be identified in future biennial Effluent Guidelines Plans. Eight rules would be begun on a staggered basis during the years 1996 to 1999 with final action between 2000 and 2003.

These actions are identical to those described in the Proposed Plan.

III. 1992 Proposed Effluent Guidelines Plan

In the Proposed Plan, EPA described its intent to continue development of 9 ongoing rulemakings, develop 12 new rules over an 11 year period, and conduct 11 preliminary studies over a 6 year period. The Proposed Plan set forth EPA's rationale for the selection of particular industries as candidates for new or revised effluent guidelines. The Proposed Plan also described the relevant statutory framework, the components and process for development of an effluent guidelines regulation, and other background information. The principal elements of the Proposed Plan were designed to implement sec. 304(m) and a consent decree in *Natural Resources Defense Council et al.* v. *Reilly* (D.D.C. 89-2980, January 31, 1992)(the "Consent Decree"). See 57 FR 19750-19755.

IV. 1992 Effluent Guidelines Plan

EPA's 1992 Effluent Guidelines Plan is set forth below. Today's Plan is substantively identical to the Proposed Plan. As noted above, the basis for selection of the industries identified in today's Plan is described in the Proposed Plan. This plan is based on funding levels proposed by the President's Budget for fiscal year 1993. If these levels cannot be achieved EPA will have to evaluate the impact on the Plan's schedules.

A. Regulations

1. Ongoing Rulemakings

EPA is currently in the process of developing new or revised effluent guidelines for nine categories. These rulemakings will proceed as previously described in the Proposed Plan. The current schedules for these rules are set forth in Table 1.

TABLE 1.—EFFLUENT GUIDELINES CURRENTLY UNDER DEVELOPMENT

Category	Proposal	Final action
Offshore Oil and Gas Extraction [1]	11/26/90 & 3/13/91	1/93
Organic Chemicals, Plastics and Synthetic Fibers (Remand issues)	12/6/91	5/93
Pesticide Chemicals (Manufacturing)	4/10/92	7/93
Pulp, Paper and Paperboard [2]	10/93	9/95
Pesticide Chemicals (Formulating and Packaging)	1/94	8/95
Waste Treatment (Phase 1)	4/94	1/96
Pharmaceutical Manufacturing	8/94	2/96
Metal Products and Machinery (Phase 1)	11/94	5/96
Coastal Oil and Gas Extraction	1/95	7/96

[1] The Offshore Oil and Gas Extraction rulemaking is not covered under the January 31, 1992 Consent Decree. The deadline is required by a Consent Decree in *NRDC v. Reilly* (D.D.C. No. 79-3442).

[2] The Pulp, Paper and paperboard rulemaking is not covered under the January 31, 1992 Consent Decree. Deadlines are required by a Consent Decree in *Environmental Defense Fund et al.* v. *Thomas* (D.D.C. No. 85-0973).

2. New Rulemakings

EPA intends to develop 12 new effluent guidelines over an 11 year period. Four of the rules are specified; the remaining eight rules will be specified in future Effluent Guidelines Plans. This schedule for developing the guidelines is set forth in Table 2, and is identical to the schedule in the Proposed Plan.

TABLE 2.—NEW CATEGORIES TO BE REGULATED

Category	Proposal	Final action
Waste Treatment, Phase 2	1995	1997
Industrial Laundries	1996	1998
Transportation Equipment Cleaning	1996	1998
Metal Products and Machinery, Phase 2	1997	1999
Eight additional categories	1998–2001	2000–2003

EPA will include any updates to these schedules in the semi-annual Regulatory Agenda published in the **Federal Register.**

B. Preliminary Studies

In the Proposed Plan EPA announced that it intended to conduct 11 preliminary studies, which will assist the Agency in selecting industries for the eight remaining rules discussed in Section IV.A.2 above (see 57 FR 19752, 19755).

The Agency is proceeding as proposed with studies for the Metal Finishing Category (40 CFR part 433) and the Petroleum Refining Category (40 CFR part 419). These studies are underway and are scheduled to be completed by the end of 1993. The findings will be published in Preliminary Data Summaries, and will be considered in preparation of the 1994 Effluent Guidelines Plan.

EPA intends to conduct nine additional studies. Six industries (all of which are currently subject to effluent guidelines) were tentatively identified in the Proposed Plan as the subject of future studies, with two studies to begin in each of 1993, 1994 and 1995. These are Iron and Steel Manufacturing (40 CFR part 420), Inorganic Chemicals (40 CFR part 415), Leather Tanning and Finishing (40 CFR part 425), Coal Mining (40 CFR part 434), Onshore/Stripper Oil and Gas Extraction (40 CFR part 435), and Textile Mills (40 CFR part 410). The Agency intends to study three additional categories, not yet identified, beginning in 1997. Other industries, identified through review of new information made available to the Agency, may be studied. Each Preliminary Study would take approximately two years to complete. Updated information on industry studies will be included in the next biennial Effluent Guidelines Plan.

C. Summary of Changes from Proposed Plan

Today's Effluent Guidelines Plan is substantively identical to the Proposed Plan. However, some clarifications are provided below in response to several comments the Agency received on the proposal.

V. Public Comments

The public comment period for the Proposed Plan closed on June 8, 1992. The Agency received comments that covered approximately 12 topics from 10 commenters, including industries, local governments (POTWs), and an environmental group. EPA also considered seven comment letters received after publication of the January 2, 1990 Effluent Guidelines Plan (55 FR 80). The summary is in this section highlights the more significant comments submitted. The administrative record for today's notice includes a complete text of the comments and the Agency's responses.

A. Metal Products and Machinery Category

Two POTWs expressed reservations about the feasibility of regulating the Metal Products and Machinery (MP&M) Category. They were concerned that implementing categorical standards for a large number of MP&M facilities in a local pretreatment program would be overly burdensome to POTWs and hinder their ability to effectively run their programs. While they did not disagree with EPA's assertions that the overall MP&M category is a significant source of toxic and nonconventional pollutants, they believed that attention should be focused on the larger facilities in the category.

EPA's Proposed Plan included a brief working description of the MP&M category. This working description is subject to change, pending collection and analysis of additional data, prior to promulgation of an effluent guideline for this category. The description in the Proposed Plan included an estimate of 970,000 facilities in the category nationwide. This figure was derived from mailing lists that EPA purchased for the purpose of sending survey questionnaires to a statistical sample of the industry.

The Agency has administered questionnaires focused primarily on MP&M Phase 1 facilities and is now analyzing the surveys along with other information it is gathering on the industry. Preliminary assessments of the Phase 1 survey information indicate that the overall size of the MP&M category is significantly smaller than the initial estimate of 970,000 facilities. The Phase 1 survey responses indicate that the information sources used to compile the Agency's mailing list included sites without manufacturing activities such as sales offices, warehouses, and company headquarters. EPA currently projects that there are 80,000 active Phase 1 sites rather than the initial estimate of 195,000. If similar trends are observed in the planned Phase 2 survey, then the number of Phase 2 sites would be projected to be about 318,000 instead of the initial estimate of 775,000.

The Notices of Proposed Rulemaking and accompanying Development Documents will provide a fuller description of the category. EPA believes that when the MP&M rules (Phases 1 and 2) are proposed, there will be a clearer and smaller estimate of the category size, and an acceptable balance between addressing serious pollutant discharges and maintaining a manageable compliance and enforcement workload at POTWs.

B. Basis for Conducting Preliminary Studies

Four industry associations questioned the need for conducting preliminary studies of existing effluent guidelines affecting their industries—Coal Mining, Iron and Steel Manufacturing, and Leather Tanning and Finishing. In the case of the Coal Mining Category, the commenter argued that in general the industry does not discharge toxic or nonconventional pollutants and that current pollutant discharges are at low concentrations (which are too small to be effectively reduced by additional treatment technology). Regarding the Iron and Steel and Leather Tanning and Finishing Categories, the commenters stated that the existing regulations were adequately protective of human health and the environment.

EPA conducted a brief review of documents supporting the existing Coal Mining effluent guidelines and estimated that high loadings of metal pollutants continue to be discharged by the category, after application of BAT-level (best available technology) limitations. These pollutants are predominantly inorganic: Antimony, arsenic, chromium, copper, lead, nickel, selenium, silver, thallium, and zinc; as well as phenol. While the Agency agrees with the commenter that these pollutants tend to be found in low concentrations in mine discharges, the nationwide pollutant

estimates are large because of the large number of mines (estimated in the thousands).

The Agency estimated that the other two categories also continue to discharge high levels of pollutants on a nationwide basis, after application of BAT-level limitations. The Iron and Steel Manufacturing Category discharges include antimony, arsenic, copper, selenium, benzene, phenol, sulfide, and fluoride. The Leather Tanning and Finishing Category discharges lead, zinc, and toxic organic pollutants.

EPA's studies of the existing regulations will likely include a review of existing wastewater characteristics and technologies (including source reduction, recycling and treatment techniques). A decision to study an industry does not mean that EPA has decided to proceed with a rulemaking for that industry.

C. Overall Effluent Guidelines Plan

One commenter recommended that any further work on effluent guidelines be postponed and that EPA's water quality efforts should be directed primarily at nonpoint source pollution. The commenter cited reports that nonpoint sources are responsible for 55 percent of the water quality problems in the nation's streams, and that directing additional work toward point sources would be a waste of resources.

The Agency agrees that nonpoint source pollution is a major cause of water quality problems nationwide. However, industrial point sources continue to cause water quality impairment in some areas, and the Agency is mandated by the Clean Water Act and the Consent Decree to develop new or revised effluent guidelines.

D. EPA Discretion Not to Regulate Following a Preliminary Study

The Natural Resources Defense Council (NRDC) objected to several phrases in the Proposed Plan relating to EPA's discretion to elect not to issue effluent guidelines for a particular industry following study of that industry. NRDC disputes whether EPA necessarily has such discretion.

EPA acknowledges that NRDC and EPA have different views concerning the Agency's discretion to decide not to proceed with an effluent guideline. At NRDC's suggestion, EPA is including as Appendix A to today's plan a copy of paragraph 6 of the Consent Decree, which states EPA's position concerning its discretion not to proceed with guidelines and establishes a procedure by which NRDC may challenge any attempt by EPA to exercise such discretion.

E. Clean Water Act Requirements Regarding Toxic and Nonconventional Pollutants

NRDC also objected to the statement in the Proposed Plan that effluent guidelines "may include limitations on any toxic or nonconventional pollutants in addition to the 126 priority pollutants" (57 FR 19751). In NRDC's view, the Clean Water Act requires, rather than allows, effluent limitations for all toxic and nonconventional pollutants present in more than trivial amounts.

EPA does not share NRDC's view on this issue. In addition, EPA believes the quoted statement, which appeared in a parenthetical explaining the Agency's methodology in calculating "toxic pound-equivalent factors", is accurate even under NRDC's view of the law.

F. Relationship of Clean Water Act and Pollution Prevention Act

NRDC recommended that the Effluent Guidelines Plan should focus explicitly on the Pollution Prevention Act of 1990 (Pub. L. 101–508) (PPA) and explain the Agency's efforts to identify source reduction opportunities in connection with the development of effluent guidelines.

The PPA declares that pollution should be prevented or reduced whenever feasible; pollution that cannot be prevented should be recycled or reused in an environmentally safe manner wherever feasible; pollution that cannot be recycled should be treated; and disposal or release into the environment should be chosen only as a last resort. Source reduction, as defined by the PPA, means any practice which reduces the amount of any hazardous substance, pollutant or contaminant entering any waste stream or otherwise released into the environment prior to recycling, treatment or disposal, and reduces the hazards to public health and the environment associated with the release of such substances. The term includes equipment or technology modification, process or procedure modifications, reformulation or redesign of products, substitution of raw materials, and improvements in housekeeping, maintenance, training, or inventory control. The term "source reduction" does not include any practice which alters the physical, chemical, or biological characteristics or the volume of a substance, pollutant, or contaminant through a process or activity which itself is not integral to and necessary for the production of a product or the providing of a service.

In developing effluent guidelines for a point source category, EPA identifies the "best available technology economically achievable" (BAT) under CWA sections 301(b) and 304(b)(2)(B) and "best available demonstrated control technology" (used for setting New Source Performance Standards) under CWA section 306. In so doing, the Agency is required to consider (among other things) process changes, non-water quality environmental impacts, energy requirements and the cost of achieving effluent reductions. Pursuant to the foregoing, the Agency routinely considers source reduction opportunities in developing effluent guidelines.

To identify source reduction opportunities in effluent guidelines, the Agency's Source Reduction Review Project (SRRP) will coordinate multi-media reviews of several industries included in the Effluent Guidelines Plan. These categories were chosen based on one or more of the following criteria:

- Environmental releases to more than one medium (air, water, solid waste);
- Potential for pollution reduction;
- Known opportunity for source reduction;
- Forthcoming regulatory requirements under multiple statutes.

The effluent guidelines to be reviewed under SRRP are:

- Pesticide Formulating and Packaging;
- Pulp, Paper and Paperboard;
- Pharmaceutical Manufacturing; and
- Metal Products and Machinery.

To further explore opportunities for source reduction in effluent guidelines, the Agency created the Industrial Pollution Prevention Project (IP3) Focus Group, a subcommittee of the National Advisory Council for Environmental Policy and Technology (NACEPT). The IP3 Focus Group is comprised of representatives from industry, citizen groups, state and local governments, consultants and academics, and is exploring ways of instituting additional pollution prevention measures in effluent guidelines. The Focus Group has held several public meetings and is beginning to formulate recommendations to the Agency.

Service industries are distinct from manufacturing industries in that their discharges of toxic and nonconventional pollutants may be a direct result of handling wastes or contaminated materials and equipment received from their customers. Industrial laundries, for example, receive soiled shop towels and work uniforms which may be contaminated with solvents or other pollutants. The Agency's technology

assessments for effluent guidelines have traditionally focused on manufacturing processes. As a result, source reduction strategies for service industries have not been fully explored. Such strategies, if adopted, would meet the requirements for "best available technology economically achievable" or "best available demonstrated control technology." In the case of the industrial laundries example, EPA may evaluate the appropriateness of source reduction methods such as substitute cleaners and changing of materials handling practices. In addition to the Industrial Laundries Category, two other categories in today's Effluent Guidelines Plan are service industries: Waste Treatment and Transportation Equipment Cleaning.

G. Relative Utility of POTW Local Limits Compared to National Categorical Pretreatment Standards

One POTW contended that local pretreatment limits established by a POTW are a more effective way of controlling specific industrial discharges to that POTW than national categorical pretreatment standards. This POTW argued that, due to the wide level of discharge variability in some of the categories listed in EPA's Proposed Plan, development of national standards would be difficult and control by means of local limits would be more effective. This is especially true for certain categories such as Waste Treatment, Industrial Laundries, and Metal Products and Machinery, according to the commenter.

EPA required POTWs to develop local limits as part of their pretreatment programs pursuant to the General Pretreatment Regulations (40 CFR part 403) and has provided assistance to POTWs in developing local limits. However, the Agency considers local limits to be complementary to, rather than a replacement for, categorical standards, as part of an overall pretreatment program. Many POTWs have informed EPA that they need categorical standards because they lack the resources and/or technical expertise to develop local limits for some pollutants, particularly toxic organics. The Agency's National Pretreatment Program Report to Congress (July 1991) listed enhancement of national categorical pretreatment standards as its first recommendation. (Improvement of local pretreatment standards was the second recommendation.) While EPA may indeed encounter more difficulty in setting national standards for some categories such as those mentioned by the commenter, other POTWs have in fact urged EPA to develop standards for these categories.

VI. Future Effluent Guidelines Plans

EPA will continue to publish Effluent Guidelines Plans biennially. In future notices, the Agency will provide updated information on these rulemakings and preliminary studies, and will notice other information received, if any, that may be considered in the designation of additional industries to be regulated by new or revised effluent guidelines. Industries listed in today's notice for further study may be designated for rulemaking in the future 304(m) notices. In those notices, the Agency may also schedule rulemaking actions for other industries not listed in today's notice, based on public comments received and new data made available to the Agency.

The public is invited to submit information on industrial discharges that may be useful to EPA in planning for future effluent guidelines development. Such information might include descriptions of specific industrial effluent, water quality effects of industrial discharges, impacts on POTWs (interference, pass-through, etc.), and developments in wastewater technology (including source reduction, recycling and treatment techniques). In particular, the Agency is interested in data that would facilitate category-wide comparisons of industries with regard to discharge characteristics, treatment practices and effects on water quality. EPA will include any information submitted in the record for the 1994 plan.

Comments on proposed guidelines for specific categories of dischargers will be accepted, as usual, according to the time periods specified in notices published as part of rulemaking proceedings to establish effluent guidelines for the categories.

VII. Economic Impact Assessment; OMB Review

This notice contains a plan for the review and revision of existing effluent guidelines and for the selection of priority industries for new regulations. This notice is not a rulemaking; therefore, no economic impact assessment has been prepared. EPA will provide economic impact analyses or regulatory impact analyses, as appropriate, for all of the future effluent guideline rulemakings developed by the Agency.

Today's notice has been reviewed by the Office of Management and Budget under Executive Order 12291.

Dated: August 28, 1992.

F. Henry Habicht II,

Acting Administrator.

Appendix A—Paragraph 6 of Consent Decree in NRDC et al. v. Reilly

(D.D.C. 89-2980, January 31, 1992)

6.(a) The parties disagree with respect to what discretion, if any EPA has under applicable law to decide not to proceed with an effluent guideline. Accordingly, the Court has determined that the following provisions shall govern in the event that EPA decides not to proceed with an effluent guideline for a particular point source category. For such purposes, "decide not to proceed with an effluent guideline" shall mean to make a final, affirmative decision prior to proposal that an effluent guideline is not appropriate for the point source category under consideration, and shall not include making a decision to defer development of such guideline.

(1) Notwithstanding the provision of Paragraphs 4 and 5, EPA reserves the discretion to decide not to proceed with any one or more effluent guidelines where the Administrator determines, pursuant to any discretion the Administrator has under the Clean Water Act, 33 U.S.C. 1251-1387, or any other legal authority, that an effluent guideline is not appropriate for the point source category under consideration. In EPA's view, such discretion includes the discretion not to proceed with an effluent guideline where the Administrator determines (taking into account the range of environmental issues confronting the Agency) that promulgating the guideline would not have the potential to significantly reduce risk to human health or the environment, or that another approach would accomplish a comparable reduction in risk. In EPA's view, such discretion also includes the discretion not to proceed with an effluent guideline on the basis of cost considerations.

(2) Plaintiffs do not necessarily agree that EPA has the discretion, under the Clean Water Act or any other legal authority, to decide not to proceed with an effluent guideline as described in Paragraph 6(a)(1), and thus reserve the right to contest any determination made pursuant to such paragraph.

(3) In the event EPA decides not to proceed with an effluent guideline with respect to any point source category described in Paragraphs 4(a) or 5(a), EPA shall notify plaintiffs within thirty (30) days of the date such discretion is exercised. Plaintiffs shall have sixty (60) days from receipt of such notice to provide EPA with a written statement of plaintiffs' intent to challenge such decision, and one hundred eighty (180) days from receipt of such notice to file any and all motions contesting such decision with the Court.

(4) In the event EPA decides not to proceed with an effluent guideline with respect to any point source category described in Paragraphs 4(a) or 5(a), and either (i) plaintiffs do not challenge such decision pursuant to the procedures and within the time frames described in Paragraph 6(a)(3)

above, or (ii) the Court holds that, in making such decision, EPA properly exercised its discretion under applicable law, then such decision shall satisfy any and all obligations of EPA under this Decree with respect to such point source category.

(b) Any decision by the Administrator not to proceed with an effluent guideline pursuant to Paragraph 6(a)(1) above shall be included in the first 304(m) Plan proposed following such determination.

(c) (1) Notwithstanding the provisions of Paragraph 6(a), EPA will take final action with respect to twelve (12) effluent guidelines (in addition to those listed in Paragraph 2) before December 31, 2003 unless, after analysis of the eleven (11) studies undertaken pursuant to Paragraph 3 and the seven (7) studies already completed, the Administrator determines, pursuant to any discretion the Administrator has under the Clean Water Act, 33 U.S.C. 1251–1387, or any other legal authority, that fewer than twelve (12) of the eighteen (18) total point source categories studied merit proposal of effluent guidelines pursuant to the standards set forth in Paragraph 6(a)(1). In such case, EPA will undertake studies of additional categories of point sources to determine whether the promulgation of additional effluent guidelines is appropriate. EPA will state its intention to conduct any such additional studies in 304(m) Plans.

(2) EPA will notify plaintiffs within thirty (30) days after any decision pursuant to Paragraph 6(c)(1) not to take final action with respect to twelve (12) effluent guidelines (in addition to those effluent guidelines listed in Paragraph 2) before December 31, 2003. Plaintiffs may challenge such decision by following the procedures set forth in Paragraph 6(a)(3) above. In the event the Court holds that EPA lacks the authority to make such a decision, the Court will establish a new schedule for taking final action on the remaining effluent guidelines.

Appendix B—Effluent Guidelines Currently Under Development, New Categories to be Regulated, and Preliminary Studies

Effluent Guidelines Currently Under Development

Category	40 CFR Part	Proposal	Final action
Offshore Oil and Gas Extraction	435	3/13/92	1/93
Organic Chemicals, Plastics and Synthetic Fibers (Remand)	414	12/6/91	5/93
Pesticides Manufacturing	455	4/10/92	7/93
Pulp, Paper and Paperboard	430	10/93	9/95
Pesticides Formulating and Packaging	455	1/94	8/95
Waste Treatment, Phase 1	437	4/94	1/96
Pharmaceutical Manufacturing	439	8/94	2/96
Metal Products and Machinery, Phase 1	438	11/94	5/96
Coastal Oil and Gas Extraction	435	1/95	7/96

New Categories To Be Regulated

Category	40 CFR Part	Proposal	Final action
Waste Treatment, Phase 2	437	1995	1997
Industrial Laundries	441	1996	1998
Transportation Equipment Cleaning	442	1996	1998
Metal Products and Machinery, Phase 2	438	1997	1999
Eight additional categories		1998–2001	2000–03

Preliminary Studies

Category	40 CFR Part	Start	Complete
Petroleum Refining	419	1992	1993
Metal Finishing	433	1992	1993
Iron and Steel Manufacturing	420	1993	1994
Inorganic Chemicals	415	1993	1994
Leather Tanning and Finishing	425	1994	1995
Coal Mining	434	1994	1995
Onshore/Stripper Oil and Gas Extraction	435	1995	1996
Textile Mills	410	1995	1996
Three additional categories		1996	1997

[FR Doc. 92–21367 Filed 9–4–92; 8:45 am]

BILLING CODE 6560–50–M

federal register

Tuesday
September 8, 1992

Part VI

Architectural and Transportation Barriers Compliance Board

36 CFR Part 1191

Americans With Disabilities Act Accessibility Guidelines; Accessible Automated Teller Machines; Proposed Rule

ARCHITECTURAL AND TRANSPORTATION BARRIERS COMPLIANCE BOARD

36 CFR Part 1191

[Docket 92-1]

Americans With Disabilities Act Accessibility Guidelines; Proposed Rule on Accessible Automated Teller Machines

AGENCY: Architectural and Transportation Barriers Compliance Board.

ACTION: Notice of proposed rulemaking.

SUMMARY: The Architectural and Transportation Barriers Compliance Board proposes to amend the reach range requirement for accessible automated teller machines (ATMs) under the Americans with Disabilities Act Accessibility Guidelines (ADAAG) based on new information received in connection with a petition for rulemaking. The proposed amendment sets out the reach ranges for controls when a person using a wheelchair can make a forward approach only, a parallel approach only, or both a forward and parallel approach to an ATM. To address the reach over an obstruction resulting from recessed controls and the installation of surrounds in front of ATMs, the proposed amendment includes a table of reach depths and maximum heights for the placement of the controls where the reach depth to any control is more than 10 inches from a parallel approach. The Department of Justice and the Department of Transportation have adopted ADAAG as the accessibility standards for certain titles of the Americans with Disabilities Act of 1990. Those agencies will be issuing separate notices of proposed rulemaking to amend the accessibility standards consistent with this rulemaking.

DATES: Comments should be received by October 8, 1992. Comments received after this date will be considered to the extent practicable.

ADDRESSES: Comments should be sent to the Office of the General Counsel, Architectural and Transportation Barriers Compliance Board, 1331 F Street, NW., Suite 1000, Washington, DC 20004-1111. Comments are available for inspection at this address from 9 a.m. to 4 p.m. on regular business days.

FOR FURTHER INFORMATION CONTACT: James Raggio, Office of the General Counsel, Architectural and Transportation Barriers Compliance Board, 1331 F Street, NW., Suite 1000, Washington, DC 20004-1111. Telephone (202) 272-5434 (Voice); (202) 272-5449 (TDD). These are not toll-free numbers. This document is available in accessible formats (cassette tape, braille, large print, or computer disc) upon request.

SUPPLEMENTARY INFORMATION:

Background

On February 24, 1992, the Architectural and Transportation Barriers Compliance Board received a petition for rulemaking from the American Bankers Association, NCR Corporation, and InterBold requesting that the reach range requirement for accessible automated teller machines (ATMs) under the Americans with Disabilities Act Accessibility Guidelines (ADAAG) be amended. On May 6, 1992, the Board published a notice in the **Federal Register** which reviewed the current ADAAG reach range requirement for accessible ATMs and the petition. 57 FR 19472 (May 6, 1992). As discussed in the May 6th **Federal Register** notice, the reach range requirement for accessible ATMs is contained in ADAAG 4.34.3. This section references ADAAG 4.27.3 which generally applies to controls and requires that the "highest operable part of controls be placed within at least one of the reach ranges specified in ADAAG 4.2.5 [forward reach] and 4.2.6 [side reach]." ADAAG 4.34.3 goes on to require "both a forward and side reach to the unit allowing a person in a wheelchair to access the controls and dispensers."

The dimensions for a forward and side reach are contained in ADAAG 4.2.5 and 4.2.6 and are taken from the "American National Standard Specifications for Making Buildings and Facilities Accessible to and Usable by Physically Handicapped People"(ANSIA117.1-1980). The maximum forward reach permitted is 48 inches above the floor. ADAAG 4.2.5 and Figure 5(a). If the forward reach is over an obstruction, clear floor space must be provided under the obstruction that equals or exceeds the reach depth for a maximum of 25 inches; and if the reach depth is between 20 inches and 25 inches, the maximum forward reach permitted is 44 inches above the floor. ADAAG 4.2.5 and Figure 5(b). The maximum side reach permitted is 54 inches above the floor for a maximum reach depth of 10 inches. ADAAG 4.2.6 and Figure 6(b). If the side reach is over an obstruction, the maximum side reach permitted is 46 inches above the floor for a maximum reach depth of 24 inches. ADAAG 4.2.6 and Figure 6(c).

As explained in the May 6th **Federal Register** notice, the controls on ATMs are typically recessed or set back into the wall or the unit for privacy and security purposes. In addition, banks usually install fixtures called "surrounds" in front of ATMs which contain writing counters and bins for envelopes and waste paper. These surrounds can create an obstruction and increase the reach depth to the controls. Persons using ATMs must also perform a range of motions and are likely not to remove their coats during inclement weather and colder temperatures which can affect their reach abilities. For these reasons, the Board originally proposed that ATMs comply with both a forward and side reach when ADAAG was initially published in the **Federal Register** for public comment. 56 FR 2296, 2380 (January 22, 1991). The Board did not receive any timely comments on the proposed reach range requirement for accessible ATMs. After the final ADAAG was issued, the petitioners informed the Board that the provision was ambiguous and that ATMs currently being sold could not comply with both a forward and side reach. The petitioners requested that ADAAG be amended to permit a forward or side reach to the controls.

The Board requested the three leading manufacturers who sell ATMs in this country to provide information about the controls on their current ATM models in connection with the petition. The information is summarized in the May 6th **Federal Register** notice. 57 FR 19472, Table 1 (May 6, 1992). Only one manufacturer, Fujitsu-ICL Systems, claimed that its current ATM models could comply with both a forward and side reach. The other manufacturers, NCR Corporation and InterBold, claimed that their current ATM models could comply with only a side reach. The manufacturers did not take into account the installation of surrounds in front of ATMs. Although the reach depth to the controls on most ATMs is less than 10 inches, the reach depth can exceed 10 inches when a surround is installed in front of the machine. As noted above, the maximum side reach permitted over an obstruction is 46 inches above the floor for a maximum reach depth of 24 inches. ADAAG 4.2.6 and Figure 6(c). Most ATMs have adjustable bases which allow the controls to be placed at different heights. In light of the new information received in connection with the petition, the Board announced in the May 6th **Federal Register** notice that it was considering amending the reach range requirement for accessible ATMs. A public hearing was held in Washington, DC on May 28, 1992 to hear from the petitioners and others affected

by the rulemaking. Written comments were also requested from the public.

Summary of Comments

Three ATM manufacturers, a surround manufacturer, the American Bankers Association, two banks, and three national and State organizations representing the interests of individuals with disabilities testified at the public hearing. Many of those who testified at the public hearing also submitted written comments. In addition, the Board received written comments from about sixty five banks; three State bank associations; six national, State, and local organizations representing the interests of individuals with disabilities; six other organizations; and two individuals. The Rights Task Force of the Consortium for Citizens with Disabilities and thirteen national organizations representing the interests of individuals with disabilities also submitted a joint set of written comments.

NCR Corporation has introduced a new generation of ATMs, the 5600 series, in November 1991. The reach depth to the highest control on most of these new ATMs is 8⅛ inches. NCR Corporation testified that it began designing the new ATMs in 1986 and followed ANSI A117.1 which generally permits controls to be placed within at least one of the reach ranges. NCR Corporation designed its new ATMs so that the highest control would comply with the 54 inch maximum side reach. NCR Corporation stated that it conducted tests with wheelchair users during and after the design of its new ATMs and that the tests show that wheelchair users can reach the controls. NCR Corporation did not address the additional reach depth resulting from the installation of surrounds in front of ATMs. NCR Corporation testified that it would have to substantially redesign three of its new ATMs to comply with a forward reach at a cost of $10 million and that it would take 18 to 24 months to accomplish. NCR Corporation also expressed concern that a forward reach would limit the functionality of its ATMs and compromise usability by others. NCR Corporation recommended that either a forward or side reach be allowed.

InterBold has also produced a new "i series" of ATMs. The reach depth to the highest control on these new ATMs ranges from 6⅛ inches to 16⅝ inches. InterBold has developed an "enhanced access fascia" for the ATM with the 16⅝ inch reach depth which allows the highest control to comply with the 46 inch maximum side reach over an obstruction while retaining the upper height profile of the machine so that it is comfortable to use from a standing position. InterBold testified that it recently retained a research firm to conduct a focus group of individuals with disabilities and to report on their reactions to two of its ATMs. The highest control on the first ATM was 50 inches from the floor and the reach depth was 17 inches. The highest control on the second ATM was 54 inches from the floor and the reach depth was 8 inches. Half of the focus group was comprised of wheelchair users and the other half used walkers and crutches or had vision impairments. InterBold submitted videotaped excerpts of the focus group which showed five wheelchair users activating the controls. The Board has requested that the full report be submitted for the record. InterBold testified that it would have to redesign two of its new ATMs to comply with a forward reach at a cost of $2 to $4 million and that it would take 18 months to accomplish. InterBold also expressed concern about a forward reach compromising usability by others. InterBold recommended that either a forward or side reach be allowed.

Fujitsu-ICL Systems has also produced new "7000 series" of ATMs and made a demonstration model available for the public hearing. Fujitsu-ICL Systems designed its new ATMs with the keypad directly below the video display screen function keys. An optional software enhancement allows the user to perform transactions from either the higher video display screen function keys or the lower keypad. If the user performs transactions from the lower keypad, the highest control which needs to be activated to operate the ATM is the card reader which can be placed at 48 inches above the floor. The controls on Fujitsu-ICL Systems' new ATMs can be installed flush against the wall or recess in the wall. Fujitsu-ICL Systems testified that if the controls are installed flush against the wall, a ¾ inch knock out would have to be provided in the wall under the ATM to comply with a forward reach. If the controls are recessed in the wall, toe or knee space would have to be provided in the wall under the ATM to comply with a forward reach. The controls also comply with a side reach. Although Fujitsu-ICL Systems demonstrated how its new ATMs could comply with both a forward and side reach, it did not make any specific recommendations regarding ADAAG.

Companion Systems, a leading manufacturer of ATM surrounds, testified about the design of the fixtures. Companion Systems stated that the area directly under ATMs is the prime area for locating writing counters and bins for envelopes and waste paper and discussed the problem of applying the side reach requirement to ATMs with surrounds. The side reach requirement does not make any allowance for reach depths between 10 inches (54 inch maximum height for controls) and 24 inches (46 inch maximum height for controls). Companion Systems pointed out that an arm reaching between these two points would normally move in an arc and submitted Figure 1 which is set forth below interpolating reach depths and maximum heights for controls if the points were connected by a straight line.

BILLING CODE 8150-01-M

COMPANION SYSTEMS
ADA STUDIES

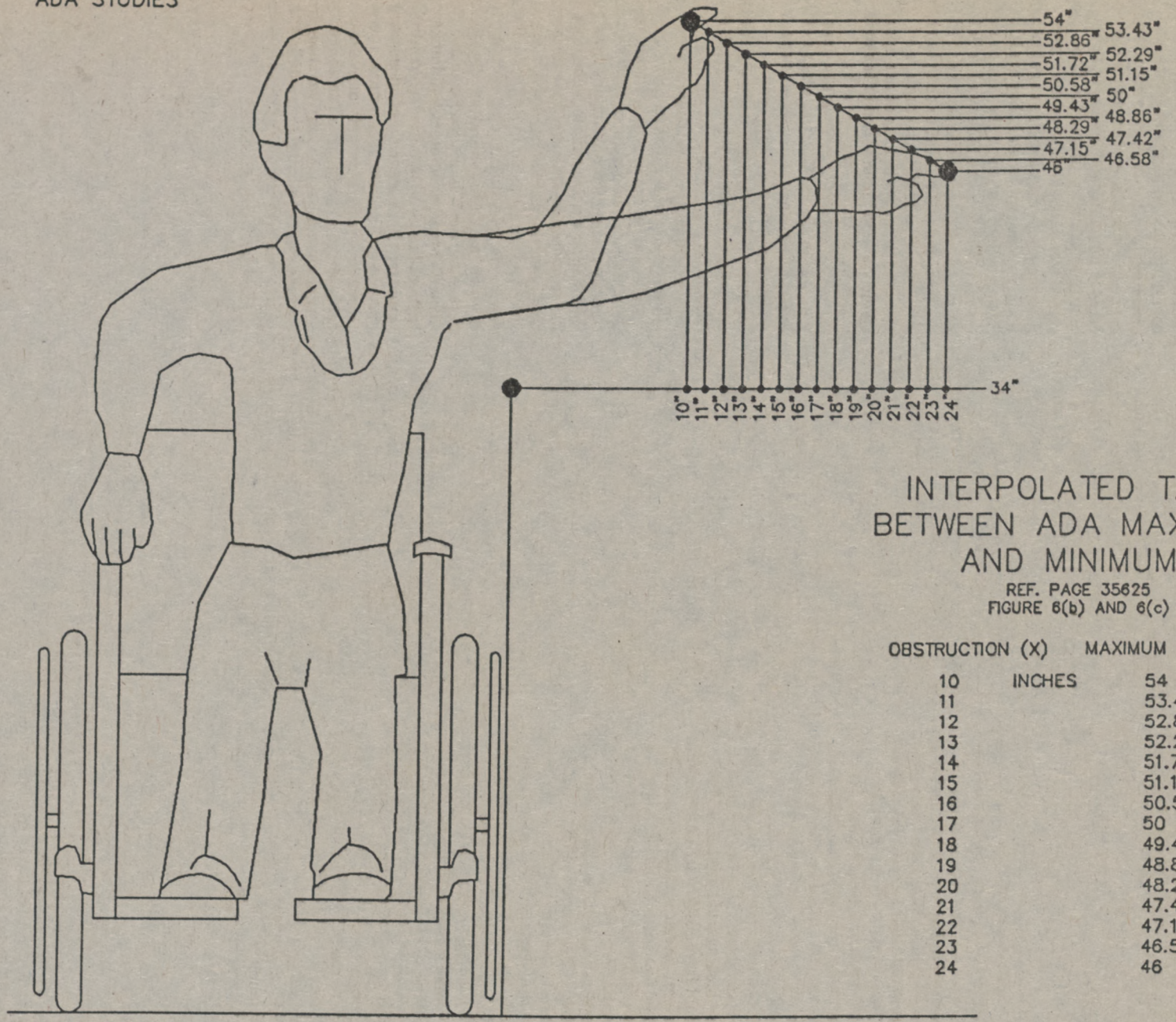

Figure 1

INTERPOLATED TABLE BETWEEN ADA MAXIMUMS AND MINIMUMS

REF. PAGE 35625
FIGURE 6(b) AND 6(c)

OBSTRUCTION (X)	MAXIMUM HEIGHT (Y)
10 INCHES	54 INCHES
11	53.43
12	52.86
13	52.29
14	51.72
15	51.15
16	50.58
17	50
18	49.43
19	48.86
20	48.29
21	47.42
22	47.15
23	46.58
24	46

BILLING CODE 8150-01-C

Based on this straight line interpolation, for each one inch increment in reach depth, the maximum height for controls would decrease approximately ½ inch. Companion Systems recommended that a table of reach depths and maximum heights for controls be included in the reach range requirement for accessible ATMs based on a straight line interpolation to address the reach over an obstruction resulting from recessed controls and the installation of surrounds in front of ATMs. InterBold and several banks submitted written comments in support of including such a table in ADAAG.

The American Bankers Association testified that if ATM manufacturers have to redesign their new ATMs at significant cost to comply with a forward reach, it will result in higher prices for ATMs and banks will purchase fewer ATMs. The American Bankers Association was further concerned that banks would be unable to relocate or resell used ATMs that do not comply with a forward reach and recommended that used ATMs be exempt from ADAAG. The American Bankers Association also expressed similar concerns as the NCR Corporation and InterBold that a forward reach would limit the functionality of ATMs and compromise usability by others, as well as privacy and security.

The banks that testified at the public hearing and that submitted written comments supported the American Bankers Association's position. Many of the banks stated that they have initiated programs to lower their existing ATMs to provide a side reach and that they would be unable to continue their programs if required to comply with a forward reach. The banks identified only one existing ATM model that is mounted on top of a night depository which cannot be lowered to provide a side reach.

The ATM Exchange, a used ATM broker, submitted written comments and estimated that about 6,000 to 8,000 used ATMs are relocated or resold each year. The ATM Exchange stated that the most common used ATMs can be installed to comply with a side reach but not a forward reach. The ATM Exchange also described some actions that it has taken to make used ATMs accessible. For example, the ATM Exchange has added a second lower keypad on a used ATM model to make it accessible. The ATM Exchange recommended that used ATMs be exempt from ADAAG and that ATM manufacturers be given adequate time to incorporate any new reach range requirement in the design of their new ATMs.

Paralyzed Veterans of America, United Cerebral Palsy Associations, Prince George's County Commission for Persons with Disabilities testified against changing the requirement for both a forward and side reach. The Rights Task Force of the Consortium for Citizens with Disabilities submitted written comments to retain the requirement, which were joined by thirteen national organizations representing the interests of individuals with disabilities. Three State and local organizations representing the interests of individuals with disabilities and two individuals also submitted written comments to retain the requirement.

Paralyzed Veterans of America testified that individuals with disabilities have a wide range of functional abilities and that the intent of the ADA is to provide access to the greatest number of persons possible. Paralyzed Veterans of America stated that changing the requirement for both a forward and side reach will put ATMs out of the reach of some of its members who have limited upper body mobility. United Cerebral Palsy Associations testified how the rulemaking affects this nation's 700,000 citizens with cerebral palsy. United Cerebral Palsy Associations estimated that 35% to 40% of these persons have mobility impairments, manual dexterity or grasping impairments, and speech impairments and would be affected by any change in the reach range requirement. The Rights Task Force of the Consortium of Citizens with Disabilities and other organizations representing the interests of individuals with disabilities who recommended that the requirement for both a forward and side reach be retained expressed similar concerns that changing the provision will result in ATMs being unusable by a portion of this nation's population with disabilities.

The National Council on Independent Living representing over 100 centers for independent living across he country submitted written comments that the current forward and side reach ranges are too high for individuals whose reach may be limited due to height, spasticity, lack of arm strength, sitting or standing instability, or poor balance. The National Council on Independent Living recommended a maximum height of "42–43 inches" for a forward reach and "44–45 inches" for a side reach. The National Council on Independent Living further recommended that, in addition to "maximum limits," lower "comfort zones" be established and their use be encouraged whenever possible. The National Council on Independent Living also suggested that if placing ATM controls at a lower height would compromise usability by others, then ATMs should be equipped with two sets of controls or, where two ATMs are provided at a location, one should be placed at a lower height and the other should be placed at a higher height.

Eastern Paralyzed Veterans Associations submitted written comments that access to ATMs is not solely a function of control heights but also the angle at which the screen and other controls are placed. Eastern Paralyzed Veterans Association recommended that additional research be done to establish definitive specifications for accessible ATMs which can be imposed as a "package" on the industry.

The California Council of the Blind submitted written comments that ATMs complying with a forward reach can result in braille instructions on the controls being unusable. The California Council of the Blind recommend that two ATMs be required at each location: one complying with a forward reach and one at a height that would be conducive to readability by individuals who are blind and visually impaired. The California Council of the Blind also recommended that ATMs be equipped with a private audio response device.

Proposed Rule

The reach depth to controls is a critical issue in establishing a reach range requirement for accessible ATMs. The ATM manufacturers and banks generally agree that recessed controls are desirable for privacy and security purposes. Surrounds also serve a useful function. A reach range requirement for accessible ATMs must address the reach over an obstruction resulting from recessed controls and the installation of surrounds in front of ATMs. As pointed out by Companion Systems, a leading manufacturer of ATM surrounds, the side reach requirement does not make any allowance for reach depths between 10 inches (54 inch maximum height for controls) and 24 inches (46 inch maximum height for controls). Interpolating reach depths and maximum heights for controls along a straight line between these points, as recommended by Companion Systems, appears to be a reasonable way to address the reach over an obstruction resulting from recessed controls and the installation of surrounds in front of ATMs. The Board proposes to include a table of reach depths and a maximum heights for controls based on a straight

line interpolation in the reach range requirement for accessible ATMs in place of requiring both a forward and side reach. The proposed rule would require that for each additional inch of reach depth beyond 10 inches, the height of the controls would be lowered ½ inch below the 54 inch maximum height for a side reach. (Due to rounding off, the controls would be lowered an additional half inch at reach depths greater that 13 inches and 20 inches.) The proposed rule will allow banks to choose among available ATM models and surround designs and, based upon their combined reach depth, install the ATM and surround so the controls are placed at the appropriate height. For instance, if the controls on an ATM are recessed 10 inches and the surround adds another 6 inches to the reach depth, the controls would be placed at a maximum height of 50½ inches.

Because many commenters remarked that the references in ADAAG 4.34 to other sections relating to clear floor space and approach were ambiguous, particularly with respect to the relationship between the required approach and applicable reach ranges, the proposed rule clarifies the application of those provisions to ATMs. ADAAG 4.34.1 is unchanged and provides that each ATM required to be accessible by the scoping provision in ADAAG 4.1.3(20) must be on an accessible route and comply with the other requirements in ADAAG 4.34. Proposed ADAAG 4.34.2 requires that ATMs be located so that clear floor space complying with ADAAG 4.2.4(30 inches by 48 inches minimum with one full unobstructed side adjoining or overlapping an accessible route) is provided to allow a wheelchair user to make a forward approach, a parallel approach, or both to the machine. When making a forward approach, the longer dimension of the wheelchair is positioned perpendicular to the ATM; and when making a parallel approach, the longer dimension of the wheelchair is positioned parallel to the ATM. ATMs are usually located in the lobby of buildings or installed through the exterior wall of buildings and accessed from the sidewalk, and there is adequate clear floor space for a wheelchair user to make a forward or parallel approach to the machine. The word "both" is used in proposed ADAAG 4.34.2 to clarify that an ATM can be located so that clear floor space is provided to allow a wheelchair user to make both types of approaches.

Figure 2 which is set forth below illustrates these points.

BILLING CODE 8150-01-M

Figure 2

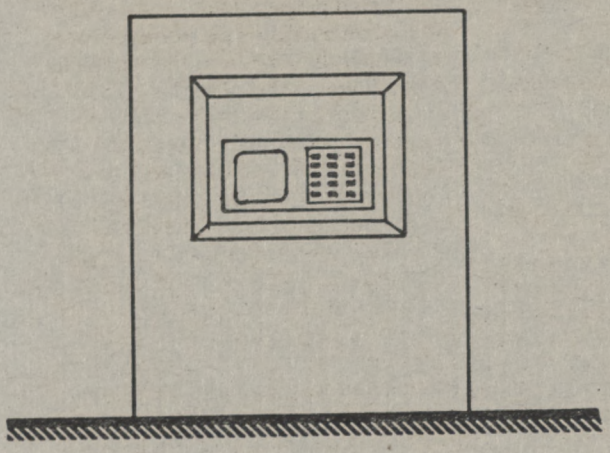

a) ATM with Surround

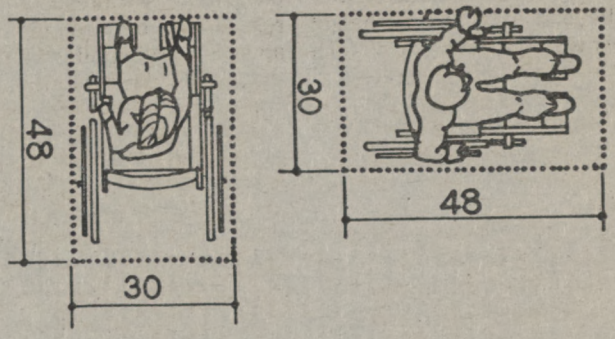

b) Clear Floor Space

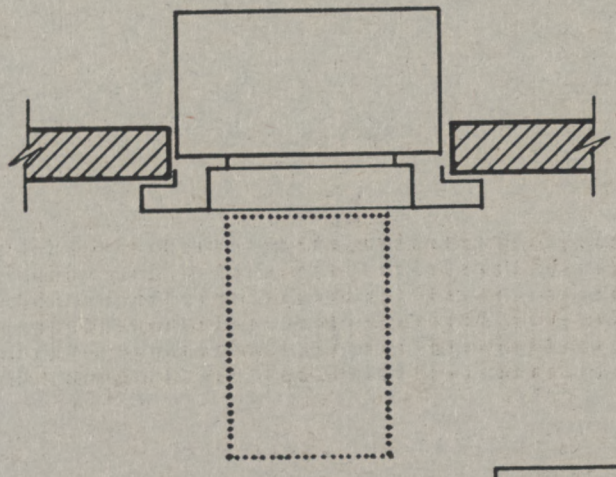

c) Forward Approach

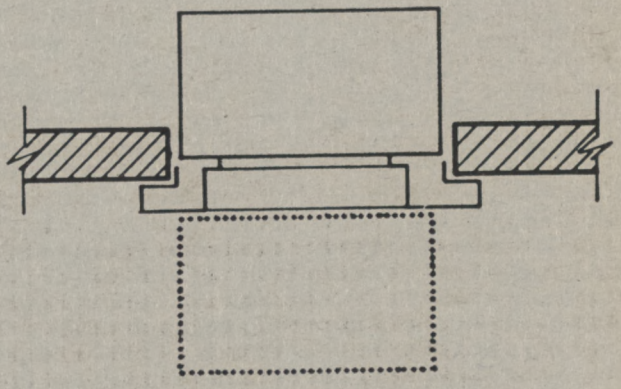

d) Parallel Approach

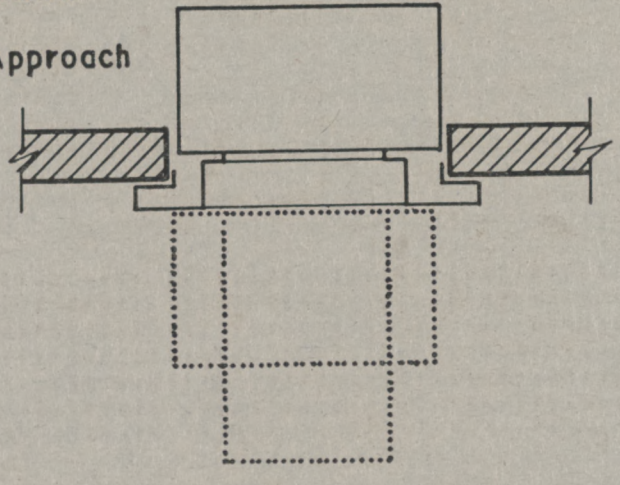

e) Forward and Parallel Approach

BILLING CODE 8150-01-C

Figure 2(a) shows an ATM with a surround. Figure 2(b) shows the clear floor space minimum dimensions. Figure 2(c) shows the clear floor space required for a front approach to an ATM. Figure 2(d) shows the clear floor space required for a parallel approach to an ATM. Figure 2(e) shows the clear floor space required for both types of approaches. One full unobstructed side of the clear floor space must adjoin or overlap an accessible route to facilitate the approach.

Proposed ADAAG 4.34.3 sets out the reach ranges for ATM controls, including card readers, keypads, video display screen function keys, receipt dispensers, and statement printers. Paragraph (1) provides that if only a forward approach is possible, operable parts of all controls would have to be placed within the forward reach range specified in ADAAG 4.2.5. For instance, if an ATM is located in a narrow alcove and a wheelchair user can make only a forward approach, the maximum height for the placement of the controls is 48 inches for a forward reach and clear floor space must be provided under the ATM that equals or exceeds the reach depth for a maximum of 25 inches. (If the reach depth is between 20 inches and 25 inches, the maximum height for the placement of the controls is 44 inches.) Paragraph (2)(a) specifies the reach ranges if only a parallel approach is possible such as where an ATM is located in a narrow corridor. Paragraph (2)(a) provides that where the reach depth to the operable parts of all controls is not more than 10 inches, the maximum height for the placement of the controls is 54 inches. Paragraph 2(b) includes the table of reach depths and maximum heights for the placement of the controls based on a straight line interpolation where the reach depth to the operable parts of any control is more than 10 inches. The maximum heights are rounded off to half inches. Paragraphs (2) (a) and (b) also clarify that the reach depth is to be measured from the vertical plane perpendicular to the edge of the unobstructed clear floor space at the farthest protrusion from the ATM or surround. Paragraph (3) provides that if both types of approaches are possible, the operable parts of all controls must be placed within at least one of the reach ranges in paragraphs (1) or (2). Thus, if there is adequate clear floor space for a wheelchair user to make a forward approach or parallel approach, at a minimum the controls must be reachable from one of the approaches. This is a change from the current ADAAG provision which requires accessible ATMs to provide for a parallel approach and both a forward and side reach. Many of the comments received in response to the May 6th **Federal Register** notice support this revision. Those comments will be considered part of this rulemaking docket and do not need to be resubmitted in response to this notice of proposed rulemaking. Paragraph (4) states that where bins are provided for envelopes, waste paper, or other purposes, at least one of each type provided must comply with the applicable reach ranges. This provision is consistent with ADAAG 4.1.3 (12)(a) which requires at least one of each type of fixed or built-in storage units to be accessible.

Proposed ADAAG 4.34.3 also includes an exception for those ATMs which are equipped with an alternate control that can perform the same function in a substantially equivalent manner. Under the exception, only one of the controls needed to perform the function is required to comply with the reach range requirement. If the controls are identified by tactile markings, such markings must be provided at both controls so that the markings can be read by persons with vision impairments from a standing position or a wheelchair.

Proposed ADAAG 4.34.4 references ADAAG 4.27.4 which provides that controls must be operable with one hand and not require tight grasping, pinching, twisting of the wrist, or more than 5 lb. force to activate. The requirement that instructions and information for use of ATMs be made accessible to and independently usable by persons with visual impairments is unchanged and has been renumbered ADAAG 4.34.5.

The references to the clear floor space and reach range requirements in the exception for drive-up only ATMs under ADAAG 4.1.3(20) are revised to reflect the newly proposed ADAAG sections.

As discussed above, the proposed rule will allow banks to choose among available ATM models and surround designs. The maximum height for the placement of controls will vary depending on where the ATM is located, the clear floor space and type of approaches possible, and reach depth. The highest control can be placed at a maximum height of 54 inches where a parallel approach is possible and the reach depth to operable parts of all the controls is not more than 10 inches. Organizations representing the interests of individuals with disabilities have commented that a 54 inch maximum height is not usable by a portion of this nation's population with disabilities and that the intent of the ADA is to provide access to the greatest number of persons possible. NCR Corporation, InterBold, and the American Bankers Association have suggested that the Board conduct research before proposing any change to the 54 inch maximum height.

As noted earlier, the 54 inch maximum height is taken from ANSI A117.1–1980. The original research for that reach was conducted in the 1950's and consisted of measuring how high wheelchair users could extend their arms in a vertical direction on a wall. The vertical reach of the persons tested, as measured from the floor to the tips of their fingers, ranged from 54 inches to 78 inches with 60 inches as average. ANSI A117.1–1961, section 3.3.1. Research sponsored by the Department of Housing and Urban Development in the 1970's tested the reach of wheelchair users and found that the vertical reach of the persons tested ranged from less than 36 inches to almost 72 inches. E. Steinfeld, S. Schroeder, M. Bishop, "Accessible Buildings for People with Walking and Reaching Limitations" 17–19 (1979). Approximately 10% of the persons tested could not reach vertically to 54 inches; and over 50% could reach to 60 inches or higher. Id. Research sponsored by the Board in the 1980's tested the reach of wheelchair users in both laboratory and field conditions and found that more than 20% of the persons tested could not reach devices above 48 inches with the exception of devices that required a flat hand push or finger push and 1.5 lb. or less force to operate. E. Steinfield, "Hands-On Architecture" Volume 3, Part II, 9(1986). The research findings further demonstrated that a 48 inch maximum height would accommodate 90% of the persons tested. Id.

Human engineering data compiled by Henry Dreyfuss Associates shows that from a parallel approach, a short female wheelchair user (58.3 inches height) can reach 53 inches vertically and 48.5 inches over a 12 inch obstruction and a tall male wheelchair user (73.6 inches height) can reach 71.2 inches vertically and 67.7 inches over a 12 inch obstruction. Henry Dreyfuss Associates, "Humanscale 1, 2, 3" Selector 3a (1974). Henry Dreyfuss Associates notes that these maximum reaches are valid only for wheelchair users who are capable of full arm movement and estimates this group to be 42% of all wheelchair users. Id at 26. Henry Dreyfuss Associates recommends a "handy reach zone" between 36 inches and 48 inches above the floor as accommodating a larger percentage of wheelchair users. Id.

Reach abilities can also vary based upon the task. For example, a wheelchair user may be able to operate a light switch or push a button at a 54 inch maximum height but inserting a card into a slot at the same height may be more difficult because of the manipulation required. Some wheelchair users may need to reach across their bodies to activate controls. (Two of the wheelchair users in the videotape submitted by Inter-Bold reached across their bodies to activate the ATM controls.) The ANSI A117.1 standard originally included a provision for a 48 inch diagonal reach to account for this type of reach. ANSI A117.1–1961, section 3.3.4.

The Board recognizes that any reach range requirement must also take into account the needs of other user groups. Usually, this is done by requiring that where more than one type of equipment is provided, one be placed at a higher height and one be placed at a lower height. For instance, ADAAG 4.1.3(17)(a) requires that where more than one bank of public telephones is provided on each floor of a building, at least one telephone per bank be installed to comply with a side reach and at least one telephone per floor be installed to comply with a forward reach. It is estimated that only 5% to 10% of locations have more than one ATM. A requirement mandating that banks provide a second ATM at each location would be very costly to implement and may result in banks providing ATMs at fewer locations.

The Board requests comments on alternative means for increasing accessibility to ATMs that do not necessarily involve installing the machines at a lower height. For instance, the card reader is the highest control on many ATMs. "Smart cards" have been developed which can activate a machine without actually inserting the card in the card reader. It may also be possible to provide two keypads on ATMs with one at a lower height. ATM manufacturers are encouraged to provide information on these and other alternatives, and their cost.

The Board notes that the June 15, 1992 final draft of ANSI A117.1 contains a provision which would require ATM video display screens to be placed so that the lower edge is at a maximum height of 38 inches above the floor or adjustable so that the screen can be readily viewed by wheelchair users. California has also proposed accessible viewing provisions for ATM video display screens. The California provisions would require the video display screen to be positioned so that it is readily visible by a wheelchair user with approximate eye level of 45 inches as follows:

- If the screen is mounted vertically or at an angle no more than 30 degrees tipped away from the viewer, the center line of the screen would have to be located a maximum of 52 inches above the floor.
- If the screen is mounted at an angle between 30 degrees and 60 degrees tipped away from the viewer, the center line of the screen would have to be located a maximum of 44 inches above the floor.
- If the screen is mounted at an angle between 60 degrees and 90 degrees tipped away from the viewer, the center line of the screen would have to be located a maximum of 34 inches above the floor.

The Board requests comments on whether any of these provisions should be included in the ADAAG requirements for accessible ATMs. The Board also requests information on any costs associated with these provisions. The Board further notes that the keypads on some ATMs are placed on the same sight line as the video display screen but are tipped at a greater angle than the screen and requests whether any viewing requirement should also apply to keypads.

The Department of Justice and Department of Transportation have adopted ADAAG as the accessibility standards for certain titles of the Americans with Disabilities Act of 1990. 28 CFR part 36, appendix A; 49 CFR part 37, appendix A. Those agencies will be issuing separate notices of proposed rulemaking to amend the accessibility standards consistent with this rulmaking.

List of Subjects in 36 CFR Part 1191

Buildings, Civil rights, Handicapped, Individuals with disabilities.

Authorized by vote of the Board on August 25, 1992.

Gordon H. Mansfield,

Chairman, Architectural and Transportation Barriers Compliance Board.

For the reasons set forth in the preamble, it is proposed that part 1191 of title 36 of the Code of Federal Regulations be amended as follows:

PART 1191—AMERICANS WITH DISABILITIES ACT (ADA) ACCESSIBILITY GUIDELINES FOR BUILDINGS AND FACILITIES

1. The authority citation for part 1191 continues to read as follows:

Authority: Americans with Disabilities Act of 1990, Pub. L. 101–336, 104 Stat. 370 (42 U.S.C. 12204).

2. The appendix to part 1191 is amended by republishing the introductory text of section 4.1.3, by revising paragraph 20 in section 4.1.3, by revising sections 4.34 and 4.34.1 through 4.34.4, and by adding section 4.34.5 to read as follows:

Appendix to Part 1191—Americans With Disabilities Act (ADA) Accessibility Guidelines for Buildings and Facilities

* * * * *

4.1.3 Accessible buildings: New construction.

Accessible buildings and facilities shall meet the following minimum requirements:

* * * * *

(20) Where automated teller machines are provided, each machine shall comply with the requirements of 4.34 except where two or more are provided at a location, then only one must comply.

Exception: Drive-up-only automated teller machines are not required to comply with 4.34.2 and 4.34.3.

* * * * *

4.34 Automated Teller Machines.

4.34.1 General.

Each automated teller machine required to be accessible by 4.1.3 shall be on an accessible route and shall comply with 4.34.

4.34.2 Clear floor space.

The automated teller machine shall be located so that clear floor space complying with 4.2.4 is provided to allow a person using a wheelchair to make a forward approach, a parallel approach, or both, to the machine.

4.34.3 Reach ranges.

(1) Forward Approach Only. If only a forward approach is possible, operable parts of all controls shall be placed within the forward reach range specified in 4.2.5.

(2) Parallel Approach Only. If only a parallel approach is possible, operable parts of controls shall be placed as follows:

(a) Reach Depth Not More Than 10 In (255 Mm). Where the reach depth to the operable parts of all controls as measured from the vertical plane perpendicular to the edge of the unobstructed clear floor space at the farthest protrusion of the automated teller machine or surround is not more than 10 in (255 mm), the maximum height from the floor shall be 54 in (1370 mm).

(b) Reach Depth More Than 10 In (255 Mm). Where the reach depth to the

operable parts of any control as measured from the vertical plane perpendicular to the edge of the unobstructed clear floor space at the farthest protrusion of the automated teller machine or surround is more than 10 in (255 mm), the maximum height from the floor shall be as follows:

Reach depth		Maximum height	
In	Mm	In	Mm
10	255	54	1370
11	280	53½	1360
12	305	53	1345
13	330	52½	1335
14	355	51½	1310
15	380	51	1295
16	405	50½	1285
17	430	50	1270
18	455	49½	1255
19	485	49	1245
20	510	48½	1230
21	535	47½	1205
22	560	47	1195
23	585	46½	1180
24	610	46	1170

(3) Forward and Parallel Approach. If both a forward and parallel approach are possible, operable parts of controls shall be placed within at least one of the reach ranges in paragraphs (1) or (2) of this section.

(4) Bins. Where bins are provided for envelopes, waste paper, or other purposes, at least one of each type provided shall comply with the applicable reach ranges in paragraph (1), (2), or (3) of this section.

Exception: Where a function can be performed in a substantially equivalent manner by using an alternate control, only one of the controls needed to perform that function is required to comply with this section. If the controls are identified by tactile markings, such markings shall be provided on both controls.

4.34.4 Controls.

Controls for user activation shall comply with 4.27.4

4.34.5 Equipment for persons with vision impairments.

Instructions and all information for use shall be made accessible to and independently usable by persons with vision impairments.

* * * * *

[FR Doc. 92-21494 Filed 9-2-92; 3:50 pm]
BILLING CODE 8150-01-M

federal register

Tuesday
September 8, 1992

Part VII

Department of Labor

Office of the Secretary

Women's Bureau; Announcement of Competition for Grant Applications for the Nontraditional Employment for Women (NEW) Act Demonstration Programs for Fiscal Year 1992; Notice

DEPARTMENT OF LABOR

Office of the Secretary

Women's Bureau; Announcement of Competition for Grant Applications for the Nontraditional Employment for Women (NEW) Act Demonstration Programs for Fiscal Year 1992

AGENCY: Office of the Secretary, Women's Bureau, Labor.

ACTION: Notice.

SUMMARY: The National Office (Washington, DC) of the Women's Bureau, U.S. Department of Labor, intends to award up to six (6) grants to conduct demonstration projects which provide a wider range of training opportunities for women in nontraditional fields.

The NEW Act establishes a four-year, $6 million demonstration program to assist States in the development of exemplary programs that train and place women in nontraditional occupations, with a special focus on growth occupations with increased wage potential.

The Women's Bureau is to award, from funds available under Title IV of JTPA, $1.5 million per year for Fiscal Years 1992, 1993, 1994 and 1995; up to six grants per year may be awarded to States. The size of the grants will be determined by the number of grants funded; i.e., if the maximum six grants are funded, awards could be approximately $250,000 each. Since these grants are to be funded from JTPA Title IV monies, the State's operating entity for JTPA is the intended grant recipient

DATES: Grant applications which request funding in FY 1992 must be received by close of business (4:45 p.m., Eastern Standard Time) Friday, November 13, 1992, or be postmarked by the U.S. Postal Service on or before that date. Applications received after the deadline will be considered to be non-responsive and not reviewed. Notice of the action taken on all applications will be issued to applicants no later than December 31, 1992. Awards will be made by January 8, 1993.

ADDRESSES: A State's operating entity for JTPA interested in submitting a grant application for review under this competition must request in writing a copy of Solicitation for Grant Application (SGA) #92–01 from the Office of Procurement Services, U.S. Department of Labor, 200 Constitution Avenue NW., room S–5220, Washington, DC 20210, Attention: Ms. Lisa Harvey.

FOR FURTHER INFORMATION CONTACT: Ms. Dora E. Carrington, Chief, Office of Administrative Management, U.S. Department of Labor, Office of the Secretary, Women's Bureau, 200 Constitution Avenue NW., room S–3305, Washington, DC 20210; telephone number: (202) 523–6606.

SUPPLEMENTARY INFORMATION:

I. Background

The Women's Bureau was established by statute in 1920 to "* * * formulate standards and policies which shall promote the welfare of wage-earning women, improve their working conditions, increase their efficiency and advance their opportunities for profitable employment."

The Bureau is an agency of the Department of Labor located in the Office of the Secretary of Labor. The Director of the Bureau serves as an advisor to the Secretary on matters affecting working women and on the development and implementation of Department of Labor policies and programs as they relate to its statutory mandate. The Women's Bureau conducts a broad-based program of research, information development and dissemination, legislation analysis, demonstration projects and technical assistance.

The Women's Bureau demonstration and technical assistance program is conducted to contribute to policy development and implementation by testing new program concepts and new techniques for assisting unions, private employers and others in their efforts to expand women's opportunities for employment and advancement. One area where the Bureau has focused considerable efforts has been that of improving women's access to training and, particularly, increasing their representation and participation in those occupational fields considered nontraditional for women.

Nontraditional jobs generally pay more than jobs traditional to women. The Bureau has long advocated that women's participation in nontraditional occupations can serve a dual purpose: it can be a means of achieving self-sufficiency for women, and it provides employers with a skilled labor force in a competitive economy. To that end, the Bureau has undertaken a number of major initiatives over time.

In 1978 the Women's Bureau participated in the revision to the regulations found at title 29 CFR part 30, Equal Opportunity in Apprenticeship and Training, as amended, as well as in the Goals and Timetables for Female and Minority Participation in the Construction Industry regulations for contractors and subcontractors subject to Executive Order 11246, as amended. In the early 1980's the Bureau also served as the Coordinator for the Monitoring Committee established by the consent order handed down in the case of Advocates for Women and Women Working in Construction versus the Department of Labor. A major effort was the Women Apprenticeship Initiative, developed in 1982 in cooperation with the Bureau of Apprenticeship and Training (BAT). This project consisted of workshops held nationwide that were designed to increase the awareness of and secure the support of employers and program sponsors in recruiting, placing, and retaining women in apprenticeable occupations. The Bureau's publication "A Women's Guide to Apprenticeship," one of the products of this project, is still requested today by practitioners in the field interested in learning effective techniques to recruit and retain women in the skilled trades.

More recently the Bureau, BAT and the Office of Federal Contract Compliance Programs (OFCCP) have been partners on the Secretary's Initiative to Improve Opportunities for Women in the Skilled Trades (WIST). WIST is a multifaceted, departmental effort to improve opportunities for women and minorities in the skilled trades, especially apprenticeships. The coordinated effort includes outreach and promotion, enforcement of applicable EEO regulations and research. The Bureau is also working in cooperation with the Department of Transportation's Federal Highway Administration to increase the number of women in skilled highway construction occupations. A program guide, developed for State Highway agencies, will be released this year. In 1989, the Bureau provided funding for the Second National Tradeswomen Conference. Discussions at the conference pointed to the need for a national advocacy organization for tradeswomen that could provide technical assistance to employers and others interested in the issue of women in the trades; the National Tradeswomen Network was subsequently established with funding from the Women's Bureau.

The body of knowledge and expertise acquired through these initiatives and through numerous technical assistance activities have given the Bureau a unique perspective from which to guide the implementation of the Nontraditional Employment for Women (NEW) Act demonstration grants. One key element of this perspective is that if women's participation and representation in the nontraditional occupations is to increase, a

fundamental change must occur within the job training system: the institutionalization of nontraditional occupational and skills training services into the primary labor market delivery system in each geographic area to encourage the inclusion of women and girls into training and employment leading to the area's best training programs and jobs which are usually nontraditional to them.

Equally important is the coordination of job training services with other vocational education and training services. Coordinating services ensures that a fuller range of activities are available to individual participants, allowing for "customizing" and tailoring of services to fit each client's needs, including the support services women need related to their family responsibilities. The NEW Act encourages both institutionalization of a broader array of employment opportunities and coordination of services. Both these elements should be present in these demonstration grants if the specifics and intent of the NEW Act are to be fully carried out.

On December 12, 1991, the President signed into law the Nontraditional Employment for Women (NEW) Act, Public Law 102–235. NEW amends the Job Training Partnership Act (JTPA) to provide a wider range of training opportunities for women under existing JTPA programs; to provide incentives for the establishment of programs that train, place and retain women in nontraditional fields; and to facilitate coordination of JTPA and vocational education resources available for training and placing women in nontraditional employment. Nontraditional job fields are defined as those in which less than 25 percent of the workers in that occupation or field are women. Construction, public utilities, technical jobs in construction, plumbing and electro-mechanics are a few examples of such occupations.

Nontraditional occupations have the potential for greatly improving the economic status of women. They tend to pay higher wages, have better fringe benefits, offer a wider variety of work schedules, greater job security and more opportunities for advancement. For some women, they may mean the difference between being on welfare and being economically self-sufficient. Nontraditional training for women also provides benefits for both the State and its service providers. This kind of training expands the occupational mix available to all clients, increases the quality of available training, and enhances coordination with other education and training programs as well as with labor and apprenticeship programs. It allows the State to be a valuable source of trained individuals for employers and unions working to meet human resource goals.

II. Eligible Applicants

Grants funded under the NEW Act demonstration programs are to be funded from JTPA Title IV monies; therefore, the State's operating entity for JTPA is the eligible applicant.

III. Funding Levels

Proposal (i.e., grant application) funding requests shall not exceed $1.5 million. Any grant application requesting more than $1.5 million shall be deemed non-responsive to this SGA and will not be evaluated.

IV. Program Design—Key Features

The grants for which States are competing shall have the following principal features:

1. Linkages and Coordination

The NEW Act calls for coordination between JTPA and other resources available (Federal and/or State) for training women in nontraditional employment, both in the Governor's Coordination and Special Services Plan (GCSSP) developed for Title IIA and for the demonstration grants. Therefore, any linkages and collaborative efforts that exist between (a) JTPA and other programs, such as registered apprenticeship programs or the Carl D. Perkins Vocational and Applied Technology Education Act (Perkins), (b) between JTPA and other entities, such as federal and/or state contractors or state agencies responsible for work that is nontraditional for women (such as highway construction), or (c) other linkages established specifically for purposes of this demonstration must be clearly identified and defined, including those articulated in the GCSSP for Title IIA. In addition, the Department expects that the private sector, in their roles as members of Private Industry Councils (PICs), employers or members of Apprenticeship Committees will be called upon to play a strategic role in the design and/or delivery of training, certainly in the placement of participants. For this reason, the level of private sector involvement in the development and implementation of training programs under NEW must also be clearly identified.

2. Existing Efforts and/or New Initiatives

Program activities funded under this grant may consist of new initiatives, further development of existing programs, or a combination. Therefore, proposals shall describe any new initiatives to be implemented through this grant; the demonstrated effectiveness of existing programs in achieving the goals of the NEW Act and the enhancements to be undertaken under this grant; and, in cases where the programmatic approach calls for a combination of new and existing programs, a description of how the new activities and existing programs will complement each other.

3. Measurable and Attainable Goals

Proposals shall describe expected impacts on participants as a result of the training programs. These impacts shall be measurable and attainable and may include awareness/orientation sessions to increase women's knowledge of opportunities in nontraditional occupations, attainment of training competencies, placement in registered apprenticeship training, completion of training, wage at placement, occupation at placement, and retention in employment. The discussion shall also include information on whether the proposed grant amount is sufficient to accomplish measurable goals; if, in linking with other programs, additional financial resources are expected, the proposal shall identify the source(s) of funds and their intended use.

4. Initiatives Continued Beyond Grant Period

As previously mentioned, it is the Department's intent that activities funded under the NEW Act lead to systemic changes that institutionalize nontraditional training within a geographic area. Proposals shall indicate the strategies to be used to encourage and promote the continuation of activities once Federal support has ended.

5. Replication and Dissemination

The Department believes that one way of encouraging and promoting institutionalization of nontraditional training within a grantee's area is to plan for replication of successful programs and to disseminate information about both the demonstration and existing model programs. For that reason, proposals shall include a discussion on the extent to which the State is prepared to accomplish dissemination of information as well as the extent to which they are prepared to produce materials for replication of the demonstration training programs.

A State's operating entity for JTPA interested in submitting a grant application for review under the FY 1992 competition should request a copy of SGA #92–01 from the Office of Procurement Services, U.S. Department of Labor, 200 Constitution Avenue NW., room S–5220, Washington, DC 20210, Attention: Ms. Lisa Harvey. Applications must be received by close of business (4:45 p.m., Eastern Standard Time), Friday, November 13, 1992, or be postmarked by the U.S. Postal Service on or before that date. Proposals received after the deadline that were not postmarked by the U.S. Postal Service on or before Friday, November 13, 1992, will be considered to be non-responsive and will not be reviewed.

Signed at Washington, DC, this 1st day of September 1992.

Elsie Vartanian,

Director, Women's Bureau.

[FR Doc. 92–21517 Filed 9–4–92; 8:45 am]

BILLING CODE 4510–23–M

federal register

Tuesday
September 8, 1992

Part VIII

Environmental Protection Agency

40 CFR Parts 372 and 721

Chemicals; Toxic Chemical Release Reporting; Community Right-to-Know; Proposed Significant New Use Rule; Proposed Rule

ENVIRONMENTAL PROTECTION AGENCY

40 CFR Parts 372 and 721

[OPPTS-400069; FRL-4078-5]

Chemicals; Toxic Chemical Release Reporting; Community Right-To-Know; Proposed Significant New Use Rule

AGENCY: Environmental Protection Agency (EPA).

ACTION: Proposed rule.

SUMMARY: EPA is partially granting a petition submitted by Governor Mario M. Cuomo of New York and the Natural Resources Defense Council to add 80 chemicals and 2 chemical categories to the list of toxic chemicals subject to reporting under section 313 of the Emergency Planning and Community Right-to-Know Act of 1986 (EPCRA) by proposing to add 68 chemicals and 2 chemical categories. All of the chemicals and chemical categories contained in this petition appear on the Resource Conservation and Recovery Act (RCRA) list of hazardous wastes at 40 CFR 261.33(f). The addition of these chemicals and chemical categories to the list of toxic chemicals is based on their acute human health effects, carcinogenicity or other chronic human health effects, or their environmental effects. EPA believes that these chemicals and chemical categories meet the criteria for addition to the list of toxic substances as established in EPCRA section 313(d)(2). EPA is not proposing to add the remaining 12 chemicals addressed in this petition because the available data do not indicate that these chemicals meet the criteria of EPCRA section 313(d)(2). Alternatively, EPA is proposing to add only those chemicals identified in this document that are produced in quantities greater than a certain manufacturing threshold. The selection of an annual manufacturing volume threshold would be guided by the section 313(f) reporting thresholds, such that the addition of those chemicals produced in quantities less than the selected threshold would not be expected to result in the submission of EPCRA section 313 Form R reports to EPA. As discussed in Unit VI, EPA is requesting comment on the use of an annual manufacturing volume threshold and on what an appropriate threshold should be. In conjunction with this alternative proposal, the Agency is proposing a significant new use rule (SNUR) under section 5(a)(2) of the Toxic Substances Control Act (TSCA) that would cover the substances manufactured or imported in amounts less than the selected manufacturing volume threshold specified in this Rule. This petition does not request that any action be taken under RCRA, and today's proposal should not be inferred as a proposed RCRA action or a request for comment on the RCRA list of hazardous wastes.

DATES: Written comment on this proposed rule should be submitted by November 9, 1992. Submissions of TSCA section 14 CBI waivers should be submitted by November 9, 1992.

ADDRESSES: Written comments should be submitted in triplicate to: OPPT Docket Clerk, TSCA Public Docket Office, Environmental Protection Agency, TS-793, Rm. NE-004, 401 M St., SW., Washington, DC 20460, Attn: Docket Number OPPTS-400069. Requests for TSCA section 14 waivers should be submitted to: TSCA Document Receipt Office (TS-790), Office of Pollution Prevention and Toxics, Environmental Protection Agency, Rm. ET-105, 401 M St., SW., Washington, DC 20460.

FOR FURTHER INFORMATION CONTACT: Maria J. Doa, Petitions Coordinator, Emergency Planning and Community Right-to-Know Information Hotline, Environmental Protection Agency, Mail Stop TS-779, 401 M St., SW., Washington, DC 20460, Toll free: 800-535-0202.

SUPPLEMENTARY INFORMATION:

Electronic Availability: This document is available as an electronic file on *The Federal Bulletin Board* the day of publication in the **Federal Register**. By modem dial 202-512-1387 or call 202-512-1530 for disks or paper copies. This file is available in Postscript, Wordperfect 5.1 and ASCII.

I. Introduction

A. Statutory Authority

This proposal is issued under section 313(d) and (e) of the Emergency Planning and Community Right-to-Know Act of 1986 (42 U.S.C. 11023 et seq., "EPCRA"). EPCRA is also referred to as Title III of the Superfund Amendments and Reauthorization Act (SARA) of 1986.

B. Background

Section 313 of EPCRA requires certain facilities manufacturing, processing or otherwise using toxic chemicals to report their environmental releases of such chemicals annually. Beginning with the 1991 reporting year, such facilities also must report pollution prevention and recycling data for such chemicals, pursuant to section 6607 of the Pollution Prevention Act (42 U.S.C. 13101 et seq.). Section 313 establishes an initial list of toxic chemicals that is comprised of more than 300 chemicals and 20 chemical categories. Any person may petition EPA to add chemicals to or delete chemicals from the list (EPCRA section 313(e)). Under EPCRA section 313(e)(2), if a State Governor petitions EPA to add a chemical to the list, the chemical will be added within 180 days after receipt of the petition, unless the Administrator: (1) Initiates a rulemaking to add the chemical to the list, in accordance with section 313(d)(2); or (2) publishes an explanation of why the Administrator believes the petition does not meet the statutory requirements of section 313(d)(2) for adding a chemical to the list.

EPA issued a statement of petition policy and guidance in the **Federal Register** of February 4, 1987 (52 FR 3479), to provide guidance regarding the recommended content and format for petitions. On May 23, 1991 (56 FR 23703), EPA published guidance regarding the recommended content of petitions to delete individual members of the section 313 metal compound categories.

II. Description of Petition

On March 4, 1992, EPA received a petition from Governor Mario M. Cuomo of New York and the Natural Resources Defense Council to add 80 chemicals and 2 chemical categories to the list of toxic chemicals under section 313 of EPCRA. All of the chemicals and chemical categories appear on the RCRA list of toxic wastes under 40 CFR 261.33(f). The petitioners contend that the chemicals should be added to the EPCRA section 313 list because "[t]he findings that must be made to add a chemical under [s]ection 313(d)(2)(B) are precisely the same findings that EPA has already made in the course of exercising its authority to identify and list hazardous wastes under RCRA." The statutory deadline for EPA's response is August 31, 1992.

III. Regulatory Status

The 80 chemicals and 2 chemical categories are regulated under RCRA as hazardous wastes under 40 CFR 261.33(f) and also appear as hazardous constituents listed in 40 CFR Part 261 Appendix VIII. The Appendix VIII list is comprised of chemicals which have toxic, carcinogenic, mutagenic, or teratogenic effects on human or other life forms (40 CFR 261.11(a)(3)). EPA uses this list as one criterion in determining whether a waste should be listed as hazardous under 40 CFR 261.11. In addition, there are other environmental statutes besides RCRA (see Table 1) under which these 80

chemicals and 2 chemical categories are regulated. For example, one of the chemicals, acetophenone, is listed as a Hazardous Air Pollutant under Title III of the Clean Air Act (CAA), as amended in 1990; 13 of the chemicals are listed on section 307(a) of the Clean Water Act (CWA) (the Priority Pollutant List) (see Table 1); 2 chemicals, 2,4,5-TP (silvex) and benzo[a]pyrene, are regulated under the Safe Drinking Water Act; all 82 chemicals and chemical categories are listed under section 102 of the Comprehensive Environmental Response, Compensation, and Liability Act (CERCLA). Table 1 lists the chemicals and identifies their regulatory status under RCRA, CWA, and CERCLA.

This petition does not request that any action be taken under any statute other than EPCRA, and today's proposal should not be inferred as a proposed action under any statute other than EPCRA or TSCA. Each statute prescribes different standards for adding or deleting chemicals or pollutants from their respective list. Today's proposal is based solely on the criteria in EPCRA section 313.

TABLE 1—Chemicals and Chemical Categories Petitioned for Addition to EPCRA Section 313

Chemical Name	CAS No.[1]	RCRA U No.[2]	CWA Section 307(a)[3]	CERLA Section 102(RQ)[4]
Acetophenone	00098-86-2	u004		5,000
Acetyl chloride	00075-36-5	u006		5,000
Amitrole	00061-82-5	u011		10
Azaserine	00115-02-6	u015		1
Benz[c]acridine	00225-51-4	u016		100
Benz[a]anthracene	00056-55-3	u018		10
Benzo[rst]pentaphene	00189-55-9	u064		10
Benzo[a]phenanthrene	00218-01-9	u050	X	100
Benzo[a]pyrene	00050-32-8	u022	X	1
Bis(2-chloroethoxy)methane	00111-91-1	u024	X	1,000
4-Bromophenyl phenyl ether	00101-55-3	u030	X	100
Carbonic difluoride	00353-50-4	u033		1,000
Chloral	00075-87-6	u034		5,000
Chlorambucil	00305-03-3	u035		10
Chlornaphazine	00494-03-1	u026		100
p-Chloro-m-cresol	00059-50-7	u039	X	5,000
2-Chloroethyl vinyl ether	00110-75-8	u042	X	1,000
beta-Chloronaphthalene	00091-58-7	u047	X	5,000
4-Chloro-o-toluidine hydrochloride	03165-93-3	u049		100
Crotonaldehyde	04170-30-3	u053		100
Cyclophosphamide	00050-18-0	u058		10
Daunomycin	20830-81-3	u059		10
DDD	00072-54-8	u060	X	1
DDT	00050-29-3	u061	X	1
Dibenzo(a,h)anthracene	00053-70-3	u063	X	1
1,4-Dichloro-2-butene	00764-41-0	u074		1
1,2-Diethylhydrazine	01615-80-1	u086		10
O,O-Diethyl-S-methyl dithiophosphate	03288-58-2	u087		5,000
Diethylstilbestrol	00056-53-1	u089		1
Dihydrosafrole	00094-58-6	u090		10
7,12-Dimethylbenz[a]anthracene	00057-97-6	u094		1
1,2-Dimethylhydrazine	00540-73-8	u099		1
Ethylenebisdithiocarbamic acids, salts and esters	NA	u114		5,000
Ethylidene dichloride	00075-34-3	u076	X	1,000
Ethyl methacrylate	00097-63-2	u118		1,000
Ethyl methanesulfonate	00062-50-0	u119		1
Fluoranthene	00206-44-0	u120	X	100
Formic acid	00064-18-6	u123		5,000
Glycidylaldehyde	00765-34-4	u126		10
Hexachlorophene	00070-30-4	u132		100
Hexachloropropene	01888-71-7	u243		1,000
Hydrogen sulfide	07783-06-4	u135		100
Indeno[1,2,3-cd]pyrene	00193-39-5	u137	X	100
Isobutyl alcohol	00078-83-1	u140		5,000
Kepone	00143-50-0	u142		1
Lasiocarpine	00303-34-4	u143		10
Maleic hydrazide	00123-33-1	u148		5,000
Malononitrile	00109-77-3	u149		1,000
Melphalan	00148-82-3	u150		1
Methacrylonitrile	00126-98-7	u152		1,000
Methapyrilene	00091-80-5	u155		5,000
Methyl chlorocarbonate	00079-22-1	u156		1,000
3-Methylcholanthrene	00056-49-5	u157		10
Methyl ethyl ketone peroxide	01338-23-4	u160		10
Methyl mercaptan	00074-93-1	u153		100
2-Methylpyridine	00109-06-8	u191		5,000
Methylthiouracil	00056-04-2	u164		10
Mitomycin C	00050-07-7	u010		10
MNNG (N-methyl-N'-nitro-N-nitrosoguanidine)	00070-25-7	u163		10
1,4-Naphthoquinone	00130-15-4	u166		5,000
N-Nitrosodiethanolamine	01116-54-7	u173		1
N-Nitroso-N-methylurethane	00615-53-2	u178		1
N-Nitrosopyrrolidine	00930-55-2	u180		1
5-Nitro-o-toluidine	00099-55-8	u181		100

TABLE 1—Chemicals and Chemical Categories Petitioned for Addition to EPCRA Section 313—Continued

Chemical Name	CAS No[1].	RCRA U No.[2]	CWA Section 307(a)[3]	CERLA Section 102(RQ)[4]
Paraldehyde	00123-63-7	u182		1,000
Pentachlorobenzene	00608-93-5	u183		10
Pentachloroethane	00076-01-7	u184		10
Phenacetin	00062-44-2	u187		100
Pronamide	23950-58-5	u192		5,000
n-Propylamine	00107-10-8	u194		5,000
Reserpine	00050-55-5	u200		5,000
Resorcinol	00108-46-3	u201		5,000
Streptozotocin	18883-66-4	u206		1
1,2,4,5-Tetrachlorobenzene	00095-94-3	u207		5,000
1,1,1,2-Tetrachloroethane	00630-20-6	u208		100
Thiram	00137-26-8	u244		10
p-Toluidine	00106-49-0	u353		100
2,4,5-TP (Silvex)[5]	00093-72-1	f027		100
1,3,5-Trinitrobenzene	00099-35-4	u234		10
Trypan blue	00072-57-1	u236		10
Uracil mustard	00066-75-1	u237		10
Warfarin and salts[6]	NA	u248		100

[1] EPA intends that the CAS Registry Number be used as the primary identifier of the chemicals proposed for addition.

[2] 40 CFR section 261.33(f). These commercial chemical products, manufacturing chemical intermediates, or off-specification commercial chemical products are identified under RCRA regulations as toxic unless otherwise designated.

[3] CWA section 307(a), Priority Pollutant List.

[4] CERCLA section 112.

[5] This chemical is listed in 40 CFR 261.31, hazardous wastes from non-specific sources.

[6] Warfarin and salts are listed under 40 CFR section 261.33(f) only when present inconcentrations of 0.3% or less. Warfarin and salts are listed under 40 CFR section 261.33(e) only when present in concentrations greater than 0.3%.

IV. EPA's Technical Review

In order to be added to the EPCRA section 313 list of toxic substances, the Administrator must determine whether, in his judgement, there is sufficient evidence to establish any one of the following:

(A) The chemical is known to cause or can reasonably be anticipated to cause significant adverse acute human health effects at concentration levels that are likely to exist beyond facility site boundaries as a result of continuous, or frequently recurring releases.

(B) The chemical is known to cause or can reasonably be anticipated to cause in humans--

(i) cancer or teratogenic effects, or

(ii) serious or irreversible--

(I) reproductive dysfunction,

(II) neurological disorders,

(III) heritable genetic mutations, or

(IV) other chronic health effects.

(C) The chemical is known to cause or can reasonably be anticipated to cause, because of--

(i) its toxicity,

(ii) its toxicity and persistence in the environment, or

(iii) its toxicity and tendency to bioaccumulate in the environment, a significant adverse effect on the environment of sufficient seriousness, in the judgement of the Administrator, to warrant reporting under this section.

In Unit IV.B of this preamble, EPA identifies each of the chemicals proposed for addition to EPCRA section 313 and the specific statutory criteria upon which the proposed addition is based.

For those chemicals that are being proposed for listing pursuant to EPCRA section 313(d)(2)(A), EPA assumes for purposes of this proposal that there are sufficient releases for the Agency to reasonably anticipate that the chemical will cause "significant acute human health effects" beyond the facility site boundaries. Due to the time limitations imposed by the statute and limitations in currently available production volume information, EPA was unable for this proposal to conduct exposure assessments for each of the chemicals proposed for listing pursuant to section 313(d)(2)(A). EPA requests comment on any release and exposure information for each of these chemicals or, in the alternative, evidence that there are no releases.

With respect to those chemicals proposed to be added pursuant to section 313(d)(2)(C), EPA requests specific information on whether each of the chemicals satisfy that criterion.

A. Introduction

In evaluating each of the chemicals or chemical categories to determine if it meets the statutory criteria in section 313(d)(2), EPA's technical review of the petition to add 80 chemicals and 2 chemical categories includes a limited hazard analyses of the known health and environmental effects for these substances using criteria outlined in the *Draft Hazard Assessment Guidelines for Listing Chemicals on the Toxic Release Inventory* (*Draft Hazard Assessment Guidelines*, Ref. 32). These *Draft Hazard Assessment Guidelines* embody internal EPA practices that have been used in the review of petitions to add and/or delete chemicals from EPCRA section 313. These *Draft Hazard Assessment Guidelines* are available for review in the docket associated with this rulemaking. This draft document was available for distribution to the public at a public meeting on May 29, 1992. EPA is currently reviewing comments received as a result of that public meeting. A final version of these guidelines has not been promulgated. Requests for further information should be addressed to the person identified under the FOR FURTHER INFORMATION CONTACT Unit at the front of this document.

EPA is proposing to add to EPCRA section 313 those chemicals that meet the criteria for "sufficient for listing" or "may be sufficient for listing" as defined in these draft guidelines. These terms are defined in the *Draft Hazard Assessment Guidelines* as follows: (1) Sufficient for listing is a "...category corresponding to the situation where there is a high level of confidence that a chemical produces a specific toxic effect, (e.g., cancer, developmental effects), or where a chemical has relatively high toxicity based on specified numerical screening criteria and there is a high confidence in the toxicity value," (2) may be sufficient for listing is a "...category corresponding to the situation where there is suggestive but not definitve evidence that a chemical produces a specific toxic effect (e.g., cancer, developmental effects), or where a chemical has intermediate

toxicity based on specified numerical screening criteria." (Ref. 32).

Information on the health and environmental effects of the 80 chemicals and 2 chemical categories was obtained from the following sources: EPA documents including *Chemical Hazard Information Profiles* (Ref. 12), *Health Advisories* (Refs. 28 and 29), *Health and Environmental Effects Profiles* (Ref. 13), Reportable Quantity documents (Refs. 17 to 27), Pesticide Position Documents (Refs. 10 and 11), and *Toxic Substances Control Act (TSCA)/Inter-agency Testing Committee-Information Reviews* (Ref. 39), *Agency for Toxic Substances and Disease Registry's Toxicological Profiles* (Refs. 4 to 6), *Shepard's Catalogue of Teratogenic Agents* (Ref. 47), *National Research Council's Publication on Drinking Water and Health* (Ref. 43), and *National Toxicology Program's Chemical Status Report* (Ref. 44). On-line searches of a limited number of data bases including *Integrated Risk Information System* (Ref. 38), *Hazardous Substances Data Bank* (Ref. 37), *Registry of Toxic Effects of Chemical Substances* (Ref. 46), *National Pesticide Information Retrieval System* (Ref. 42), *Quantitative Structure-Activity Relationship* (Ref. 45), and *Aquatic Information Retrieval* (Ref. 3) were performed to supplement the information from the secondary sources listed above. Data on the chemicals and chemical categories were reviewed for evidence indicating adverse acute and chronic toxicity, carcinogenicity, mutagenicity, developmental and reproductive effects, neurotoxicity, and environmental fate and effects. This information is summarized in the support document for today's proposal (Ref. 35). A limited discussion of the health and environmental effects associated with each of the 80 chemicals and 2 chemical categories follows.

All chemicals are listed as RCRA hazardous wastes at 40 CFR 261.33(f) for toxicity only unless otherwise noted.

B. Chemicals Proposed for Addition to EPCRA Section 313

1. *Acetophenone* (CAS No. 00098–86–2). Changes in the ratio of chronaxies of antagonist muscles, decreases in the albumin/globulin ratio of the blood, congestion of the cardiac vessels, and pronounced dystrophy of the liver was observed in male rats continuously exposed to acetophenone vapor at 0.07 milligrams per cubic meter (mg/m^3) for 70 days. A lowest-observed-adverse-effect level (LOAEL) and a no-observed-adverse-effect level (NOAEL) of 0.0446 milligram per kilogram per day (mg/kg/day) and 0.00446 mg/kg/day were determined, respectively. A supporting study reported degeneration of olfactory bulb cells in rats continuously exposed to acetophenone vapor at 9 mg/m^3 (5.7 mg/kg/day) for up to 3 months (Ref. 40). Therefore, there is sufficient evidence for listing acetophenone on EPCRA section 313 pursuant to section 313(d)(2(B) based on the available toxicity data for this chemical.

2. *Amitrole* (CAS No. 00061–82–5). Amitrole is classified as a B2 carcinogen by EPA; i.e., a probable human carcinogen. It is classified as a Group 2B carcinogen by the International Agency for Research on Cancer (IARC); i.e., the compound is a possible human carcinogen based on sufficient evidence of carcinogenicity in animals and inadequate evidence in humans. Animal studies indicate that amitrole administered in the diet to rats or mice induced thyroid carcinomas (rats) and thyroid adenomas (mice) (Ref. 37). Therefore, there is sufficient evidence for listing amitrole on EPCRA section 313 pursuant to section 313(d)(2)(B) based on the available carcinogenicity data for this chemical.

3. *Azaserine* (CAS No. 00115–02–6). Azaserine is classified as a Group B2 carcinogen by EPA; the compound is a probable human carcinogen based on sufficient data in animals and lack of data in humans. It is classified as a Group 2B carcinogen by IARC; i.e., possibly carcinogenic to humans. Animal studies indicate that azaserine administered in drinking water or by gavage to Wistar rats induced pancreatic tumors and that intraperitoneal injection induced both pancreatic and kidney adenocarcinomas. Additional animal studies support the conclusion that azaserine induces pancreatic tumors in Fischer and Lewis rats (Ref. 16). Therefore, there is sufficient evidence for listing azaserine on EPCRA section 313 pursuant to section 313(d)(2)(B) based on the available carcinogenicity data for this chemical.

4. *Benz(c)acridine* (CAS No. 00225–51–4). Based on the lack of human data and limited evidence of carcinogenicity in animals, IARC classified benz(c)acridine as a Group 3 carcinogen; i.e., the agent is not classifiable as to its carcinogenicity. The compound has been placed on EPA's Carcinogen Assessment Group's list of carcinogens. However, it has no EPA carcinogenicity classification. Benz(c)acridine was a weak lung and liver carcinogen following intraperitoneal administration to newborn mice. Papillomas of the bladder were noted in a few rats which received the chemical via implantation into the bladder. Squamous-cell carcinomas were observed in a limited number of animals after the chemical was dermally applied to the neck of mice. It should be noted, however, that benz(c)acridine is a heterocyclic analogue of benz(a)anthracene, which is classified as a Group B2 carcinogen by EPA. Like benz(a)anthracene, benz(c)acridine has a bay-region benzo ring which could be metabolized to a bay-region diol-epoxide, a reactive intermediate that can interact with DNA to initiate carcinogenesis. Benz(c)acridine has been shown to be mutagenic in bacteria and mammalian cells. Furthermore, several methyl-substituted benz(c)acridines are moderately or highly carcinogenic (Refs. 34, 37, and 46). Therefore, there may be sufficient evidence for listing benz(c)acridine on EPCRA section 313 pursuant to section 313(d)(2)(B) based on the available mutagenicity data for this chemical and analogy to benz(a)anthracene.

5. *Benz(a)anthracene* (CAS No. 00056–55–3). Benz(a)anthracene is classified as a Group B2 carcinogen by EPA; i.e., the compound is a probable human carcinogen based on sufficient data from animal bioassays and the lack of data in humans. It is classified as a Group 2A carcinogen by IARC; i.e, a probable human carcinogen. Benz(a)anthracene produced tumors in mice exposed by gavage (pulmonary adenoma, hepatoma, and forestomach papillomas), intraperitoneal injection (pulmonary adenoma and liver carcinomas), subcutaneous injection (sarcoma), or intramuscular injection (fibrosarcomas and hemangioendotheliomas), and topical application. Benz(a)anthracene produced mutations in bacteria and in mammalian cells, and transformed mammalian cells in culture (Refs. 37 and 38). Therefore, there is sufficient evidence for listing benz(a)anthracene on EPCRA section 313 pursuant to section 313(d)(2)(B) based on the available carcinogenicity data for this chemical.

Acute aquatic toxicity test data indicate that based on a measured daphnid 96–hour LC_{50} of 10 parts per billion (ppb), and estimated toxicity values of 61 ppb for fish 96–hour LC_{50}, 85 ppb for daphnid 48–hour LC_{50}, and 65 ppb for an algae 96–hour EC_{50}, benz(a)anthracene is highly toxic to aquatic organisms. Estimated toxicity values were derived using Quantitative Structure-Activity Relationship (QSAR) analysis based on the equation for neutral organic chemicals and an octanol-water partition coefficient (log

P) of 5.66 (Refs. 3 and 45). There is sufficient evidence for listing benz(a)anthracene on EPCRA section 313 pursuant to section 313(d)(2)(C) based on available ecotoxicity information for this chemical, because the aquatic toxicity of benz(a)anthracene is less than 100 ppb and the estimated chemical half-life is greater than 100 days.

6. *Benzo(rst)pentaphene* (CAS No. 00189–55–9). Benzo(rst)pentaphene is classified as a Group B2 carcinogen by EPA; i.e., the compound is a probable human carcinogen based on the lack of human data and sufficient evidence of carcinogenicity in animals. It is classified as a Group 2B carcinogen by IARC; i.e., possibly carcinogenic to humans. Carcinomas of the skin were observed in mice following dermal exposure to the chemical. Pulmonary and hepatic tumors were noted in mice receiving intraperitoneal injections of the chemical (Ref. 37). Therefore, there is sufficient evidence for listing benzo(rst)pentaphene on EPCRA section 313 pursuant to EPCRA section 313(d)(2)(B) based on the available carcinogenicity data for this chemical.

7. *Benzo(a)phenanthrene* (CAS No. 00218–01–9). Benzo(a)phenanthrene is classified as a Group B2 carcinogen by EPA; i.e., the compound is a probable human carcinogen based on sufficient data from animal bioassays and the lack of human data. It is classified as a Group 3 carcinogen by IARC; i.e., not classifiable as to its carcinogenicity to humans. Benzo(a)phenanthrene produced carcinomas and malignant lymphomas in mice after intraperitoneal injection and skin carcinomas in mice following dermal exposure. Although there are no human data that specifically link exposure to benzo(a)phenanthrene to human cancers, it is a component in mixtures that have been associated with human cancer (Refs. 37 and 38). Therefore, there is sufficient evidence for listing benzo(a)phenanthrene on EPCRA section 313 pursuant to EPCRA section 313(d)(2)(B) based on the available carcinogenicity data for this chemical.

8. *Benzo(a)pyrene* (CAS No. 00050–32–8). Benzo(a)pyrene is classified as a Group B2 carcinogen by EPA; i.e., the compound is a probable human carcinogen based on inadequate human carcinogenicity data and sufficient data in animals. It is classified as a Group 2A carcinogen by IARC. IARC reported that there is sufficient evidence that benzo(a)pyrene is an animal carcinogen and limited evidence that it is a human carcinogen. Human data specifically linking benzo(a)pyrene to a carcinogenic effect are lacking. There are multiple animal studies in rodent and nonrodent species reported by IARC which demonstrate benzo(a)pyrene to be carcinogenic following administration by oral, intratracheal, inhalation, and dermal routes. Benzo(a)pyrene administered orally to rats and hamsters produced stomach tumors. Respiratory tract tumors have been observed in hamsters exposed to benzo(a)pyrene via the inhalation route of exposure (Refs. 14 and 38). Therefore, there is sufficient evidence for listing benzo(a)pyrene on EPCRA section 313 pursuant to section 313(d)(2)(B) based on the available carcinogenicity data for this chemical.

Acute aquatic toxicity test data for benzo(a)pyrene indicate measured values of 5 ppb for a daphnid 96–hour LC_{50}, whereas 72–hour EC_{50} values for algae range from 5 ppb to greater than 4,000 ppb. Estimated toxicity values based on QSAR analysis using the equation for neutral organics and a log P of 6.12 give 96–hour and 48–hour LC_{50} values for fish and daphnid of 25 and 36 ppb, respectively, and an algae 96–hour EC_{50} of 28 ppb. Bioconcentration factors (BCF) for fish are 920 (measured) and 27,214 (QSAR estimation) (Refs. 3 and 45). There is sufficient evidence for listing benzo(a)pyrene on EPCRA section 313 pursuant to section 313(d)(2)(C) based on the available ecotoxicity information for this chemical, because the acute aquatic toxicity of benzo(a)pyrene is less than 1 parts per million (ppm) and the BCF is approximately or greater than 1,000.

9. *Bis(2-chloroethoxy)methane* (CAS No. 00111–91–1). Inhalation of 120 ppm (0.85 milligram per liter (mg/L)) of bis(2-chloroethoxy)methane for 4 hours resulted in deaths of six of six rats. It has a high degree of toxicity in the rat orally and in the guinea pig by skin contact (Ref. 37). However, the dose levels were not reported. Therefore, there may be sufficient evidence for listing bis(2-chloroethoxy)methane on EPCRA section 313 pursuant to section 313(d)(2)(A) based on the available acute toxicity data for this chemical.

10. *4-Bromophenyl phenyl ether* (CAS No. 00101–55–3). Aquatic toxicity test data for 4-bromophenyl phenyl ether range from 0.36 ppm for the daphnid 48–hour LC_{50} to 5.9 ppm for the fish 96–hour LC_{50}. Using QSAR analysis based on the equation for neutral organics and a log P of 5.24, acute toxicity values for aquatic organisms were consistently less than 1 ppm (0.17 ppm for fish and algae and 0.22 ppm for daphnids) (Ref. 3). These aquatic toxicity values, most of which are greater than 100 ppb and less than 1 ppm, indicate that there may be sufficient evidence for listing 4-bromophenyl phenyl ether on EPCRA section 313 pursuant to EPCRA section 313 (d)(2)(C) based on the available ecotoxicity information for this chemical.

11. *Carbonic difluoride* (CAS No. 00353–50–4). Acute inhalation exposures to carbonic difluoride gas may induce hemorrhage and pulmonary edema in rats. A suitable NOAEL or LOAEL for this effect was not established. The rat LC_{50} for carbonic difluoride ranges from 243 to 1,215 mg/m^3 (0.24 to 1.2 mg/L). Although several other acute inhalation studies suggest that the lung may be a target organ, none of the studies identified suitable NOAELs or LOAELs (Ref. 48). Therefore, the available evidence may be sufficient for listing carbonic difluoride on EPCRA section 313 pursuant to EPCRA section 313(d)(2)(A) based on the available toxicity data for this chemical.

12. *Chlorambucil* (CAS No. 00305–03–3). Chlorambucil is classified as a Group A carcinogen by EPA; i.e., the compound is carcinogenic to humans based on sufficient evidence of carcinogenicity in humans and animals. It is classified as a Group 1 carcinogen by IARC; i.e., carcinogenic to humans. In a National Cancer Institute (NCI) bioassay, there was clear evidence of carcinogenicity of chlorambucil to rats and mice. Significant increases in malignant tumors of the mammary gland, central and peripheral nervous system, hematopoietic and lymphatic systems, and external auditory canal have been reported in female rats given chlorambucil by gavage. Chlorambucil also produced lymphosarcomas in male rats, lymphosarcomas and lung tumors in male and female mice, and ovarian tumors in female mice following intraperitoneal injection. Human data indicate that chlorambucil treatment is associated with an increased risk of developing acute leukemia (Refs. 18, 37, and 46). Therefore, there is sufficient evidence for listing chlorambucil on EPCRA section 313 pursuant to EPCRA section 313(d)(2)(B) based on the available carcinogenicity data for this chemical.

13. *Chlornaphazine* (CAS No. 00494–03–1). Using the Konemann equation for QSAR analysis, the 96–hour LC_{50} for fish is estimated to be less than 2.2 ppm based on a molecular weight of 268.2 and a log P of 4.5. Chlornaphazine is an alkylating agent and these chemicals are known to have excess toxicity (Ref. 45). Therefore, there is sufficient evidence for listing chlornaphazine on EPCRA section 313 pursuant to EPCRA section 313(d)(2)(C) based on the available

ecotoxicity data for this chemical because the estimated aquatic toxicity values are less than 2.2 ppm and the chemical will have excess toxicity.

14. *p-Chloro-m-cresol* (CAS No. 00059–50–7). Although there is little data on the toxicity of p-chloro-m-cresol in humans, it has been rated as very toxic, with a probable lethal dose to humans of 50 to 500 mg/kg. No chronic toxicity data were available for this chemical; however, acute data suggest that the compound may be hepatotoxic and/or neurotoxic. In male rats, a single oral or subcutaneous dose of 400 mg/kg p-chloro-m-cresol induced cellular changes in the liver and irregularities in the bile canaliculi. In mice, exposure to p-chloro-m-cresol via subcutaneous injection induced tremors, resulting in an LD_{50} of 360 mg/kg, whereas exposure via intravenous injection induced coma, resulting in an LD_{50} of 70 mg/kg (Refs. 37 and 46). Therefore, there may be sufficient evidence for listing p-chloro-m-cresol on EPCRA section 313 pursuant to EPCRA section 313(d)(2)(A) based on the acute toxicity data available for this chemical.

15. *4-Chloro-o-toluidine hydrochloride* (CAS No. 03165–93–3). 4-Chloro-o-toluidine hydrochloride is classified as a Group B2 carcinogen by EPA; i.e., the compound is a probable human carcinogen based on inadequate evidence from human data and sufficient evidence from animal studies. It is classified as a Group 2B carcinogen by IARC; i.e., a probable human carcinogen. Epidemiology studies are inadequate in evaluating the carcinogenic potential of 4-chloro-o-toluidine hydrochloride in humans. In a long-term feeding study by NCI, 4-chloro-otoluidine hydrochloride induced hemangiomas, hemangiosarcomas, and vascular tumors in mice. An increase in the incidence of pituitary chromophobe adenomas, although not clearly treatment-related, was observed in female rats following dietary administration (Refs. 17 and 37). Therefore, there is sufficient evidence for listing 4-chloro-o-toluidine hydrochloride on EPCRA section 313 pursuant to EPCRA section 313(d)(2)(B) based on the available carcinogenicity data for this chemical.

16. *Crotonaldehyde* (CAS No. 04170–30–3). Aquatic toxicity test data indicate measured fish 96–hour LC_{50} values of 0.65 to 3.5 ppm, a daphnid 48–hour LC_{50} of 2.0 ppm, and an algal 96–hour EC_{50} of 0.88 ppm (Refs. 3 and 31). There may be sufficient evidence for listing crotonaldehyde on EPCRA section 313 pursuant to section 313(d)(2)(C) based on the available ecotoxicity information for this chemical, because the measured aquatic toxicity values for crotonaldehyde are less than 1 ppm but greater than 100 ppb.

17 *Cyclophosphamide* (CAS No. 00050–18–0). Cyclophosphamide is classified as a Group B1 carcinogen by EPA; i.e., the compound is a probable human carcinogen based on sufficient data in animals and limited data in humans. It is classified as a Group 1 carcinogen by IARC; i.e., the compound is carcinogenic to humans. In an NCI bioassay, there was clear evidence of its carcinogenicity in mice and rats. Cyclophosphamide is carcinogenic in animals following oral or parenteral administration producing tumors in the bladder and other organs in rats, and leukemia, mammary tumors, and hematopoietic system tumors in mice. In humans it is associated with an increased incidence of bladder cancer and acute nonlymphocytic leukemia in patients treated with cyclophosphamide (Refs. 19 and 37). Therefore, there is sufficient evidence for listing cyclophosphamide on EPCRA section 313 pursuant to EPCRA section 313(d)(2)(B) based on the available carcinogenicity data for this chemical.

18. *Daunomycin* (CAS No. 20830–81–3). Daunomycin is classified as a Group B2 carcinogen by EPA; i.e., the compound is probably carcinogenic to humans. It is classified as a Group 2B carcinogen by IARC; the compound is probably carcinogenic to humans based on the lack of human data and sufficient evidence of carcinogenicity data in animals. There was clear evidence of carcinogenicity in rats in NCI studies. In other studies, increased incidences of reticulosarcomas or leukemia were noted in mice receiving weekly oral doses of 12.5 mg/kg daunomycin for 22 weeks. Renal tumors, mammary tumors, and fibroadenomas have been observed following the intravenous injection of daunomycin in rats (Refs. 37 and 46). Therefore, there is sufficient evidence for listing daunomycin on EPCRA section 313 pursuant to section 313(d)(2)(B) based on the available carcinogenicity data for this chemical.

19. *DDD* (CAS No. 00072–54–8). DDD, a metabolite of DDT, is classified as a Group B2 carcinogen by EPA; i.e., the compound is a probable human carcinogen based on an increased incidence of lung tumors in male and female mice, liver tumors in male mice, and thyroid tumors in male rats receiving DDD in the diet. In NCI studies, there was clear evidence of carcinogenicity in rats but not in mice (Refs. 4, 38, and 46). Therefore, there is sufficient evidence for listing DDD on EPCRA section 313 pursuant to EPCRA section 313(d)(2)(B) based on the available carcinogenicity data for this chemical.

Aquatic toxicity test data indicate that measured 96–hour LC_{50} values for fish range from 2.5 ppb to 740 ppb; the 96–hour LC_{50} value for shrimp is 2.4 ppb, and for daphnids is 3.2 ppb. Estimated aquatic toxicity values, based on QSAR analysis using the neutral organic equation and a log P of 6.96, are between 4 ppb for fish 96–hour LC_{50} and 6 ppb for daphnid 48–hour LC_{50}, indicating that DDD is highly toxic to aquatic organisms (Refs. 3 and 45). There is sufficient evidence for listing DDD on EPCRA section 313 pursuant to EPCRA section 313(d)(2)(C) based on the available ecotoxicity information for this chemical, because the aquatic toxicity values for DDD are less than 100 ppb and the estimated lop P value is greater than 5.5.

20. *DDT* (CAS No. 00050–29–3). DDT is classified as a Group B2 carcinogen by EPA; i.e., the compound is a probable human carcinogen based on increased incidence of hepatic tumors in various mouse strains and in rats treated with DDT in the diet. It is classified as a Group 2B carcinogen by IARC; i.e., the compound is a probable human carcinogen (Refs. 38 and 43). In NCI studies, DDT was noncarcinogenic to mice and rats. DDT is a canceled pesticide (Ref. 30). Therefore, there is sufficient evidence for listing DDT on EPCRA section 313 pursuant to EPCRA section 313(d)(2)(B) based on the available carcinogenicity data for this chemical.

Aquatic toxicity test data include measured fish 96–hour LC_{50} values ranging from 0.4 ppb to 20 ppb. Estimated BCFs for DDT range from 44,594 to 114,524. The biodegradation half-life is estimated to be greater than 20 days and possibly greater than 100 days; the hydrolysis half-life may exceed 1,000 days (Refs. 3 and 41). There is sufficient evidence for listing DDT on EPCRA section 313 pursuant to EPCRA section 313(d)(2)(C) based on the available ecotoxicity information for this chemical because the measured aquatic acute toxicity of DDT is consistently less than 100 ppb.

21. *Dibenzo(a,h)anthracene* (CAS No. 00053–70–3). Dibenzo(a,h)anthracene is classified as a Group B2 carcinogen by EPA; i.e., the compound is a probable human carcinogen based on sufficient data from animal bioassays and no human data. Numerous studies that demonstrate complete carcinogenic activity and initiating activity of dibenzo(a,h)anthracene are summarized

by IARC, which has classified it as a Group 2B carcinogen.
Dibenzo(a,h)anthracene produced carcinomas (pulmonary and mammary) in rats when administered by the oral route. Mammary carcinomas were observed in two strains of mice following gavage (Ref. 38). Therefore, there is sufficient evidence for listing dibenzo(a,h)anthracene on EPCRA section 313 pursuant to EPCRA section 313(d)(2)(B) based on the available carcinogenicity data for this chemical.

22. *1,4-Dichloro-2-butene* (CAS No. 00764–41–0). 1,4-Dichloro-2-butene is classified as a Group B2 carcinogen by EPA; i.e., the compound is a potential human carcinogen based on an increased incidence of nasal carcinomas in male and female rats in two inhalation studies. It is classified as a Group 3 carcinogen by IARC; i.e., not classifiable as to its carcinogenicity to humans. 1,4-Dichloro-2-butene induced germ cell mutation and was mutagenic in *in vivo* and *in vitro* assays (Ref. 37). Therefore, there is sufficient evidence for listing 1,4-dichloro-2-butene on EPCRA section 313 pursuant to EPCRA section 313(d)(2)(B) based upon the available carcinogenicity and mutagenicity data for this chemical.

23. *1,2-Diethylhydrazine* (CAS No. 01615–80–1). Several animal studies have demonstrated the tumorigenicity of this chemical in rats following subcutaneous or intravenous injection. The assessment of the carcinogenicity of 1,2-diethylhydrazine is currently under review by EPA. 1,2-Dimethylhydrazine, an analogous compound, is classified as a B2 Group carcinogen by EPA based on sufficient evidence from animal studies (the compound induced tumors at a number of sites in mice and rats) (Refs. 38 and 46). Therefore, there may be sufficient evidence for listing 1,2-diethylhydrazine on EPCRA section 313 pursuant to EPCRA section 313(d)(2)(B) based on the available carcinogenicity data for this chemical and based on analogy with 1,2-dimethylhydrazine.

24. *O,O-Diethyl S-methyl dithiophosphate* (CAS No. 03288–58–2). Estimated aquatic toxicity values, derived using QSAR analysis with the equation for esters and a log P of 2.8, are 11.3 ppm for fish 96–hour LC_{50}, 29.8 ppm for daphnid 48–hour LC_{50}, and 0.9 ppm for algae 96–hour EC_{50} (Ref. 45). Because the algal estimated acute aquatic toxicity value is less than 1 ppm and O,O-diethyl S-methyl dithiophosphate is a pesticide component known to inhibit cholinesterase activity, there is sufficient evidence to list O,O-diethyl S-methyl dithiophosphate on EPCRA section 313 pursuant tc EPCRA section 313(d)(2)(C) based on the available ecotoxicity data for this compound.

25. *Diethylstilbestrol* (CAS No. 00056–53–1). Diethylstilbestrol is classified as a Group A carcinogen by EPA; the agent is carcinogenic to humans based on sufficient evidence in humans and animals. It is classified as a Group 1 carcinogen by IARC; i.e., carcinogenic to humans. Vaginal adenocarcinoma in young women was associated in seven out of eight cases with diethylstilbestrol treatment of the mother of the patients during the first trimester of pregnancy. Vaginal adenosis in female patients exposed in utero to diethylstilbestrol has also been reported. Animal studies indicate the induction of breast tumors in mice fed diethylstilbestrol in the diet, the induction of pituitary and hepatic tumors in rats fed diethylstilbestrol in the diet, and reproductive tract neoplasms in hamsters given diethylstilbestrol via gastric intubation. In addition, the compound is considered to be a known carcinogen by the National Toxicology Program (NTP) (Refs. 37, 46, and 47). Therefore, there is sufficient evidence for listing diethylstilbestrol on EPCRA section 313 pursuant to EPCRA section 313(d)(2)(B) based on the available carcinogenicity data for this chemical.

26. *Dihydrosafrole* (CAS No. 00094–58–6). Dihydrosafrole is classified as a Group 2B carcinogen by IARC; i.e., the compound is a probable human carcinogen based on the lack of data in humans and sufficient evidence of carcinogenicity in animals. Chronic oral administration of dihydrosafrole induced liver tumors in mice and esophageal tumors in rats (Ref. 37). Therefore, there is sufficient evidence for listing dihydrosafrole on EPCRA section 313 pursuant to EPCRA section 313(d)(2)(B) based on the available carcinogenicity data.

27. *7,12-Dimethylbenz(a)anthracene* (CAS No. 00057–97–6). 7,12-Dimethylbenz(a)anthracene is classified as a Group B2 carcinogen by EPA; i.e., the compound is a probable human carcinogen based on sufficient evidence from animal studies and lack of data in humans. It is classified as a Group 2B carcinogen by IARC; i.e., possibly carcinogenic to humans. In animal studies, single or multiple doses of 7,12-dimethylbenz(a)anthracene induced mammary tumors in mice and rats exposed by gastric intubation or gavage, and topical application induced various tumors in rats, mice, and hamsters (Ref. 20). Therefore, there is sufficient evidence for including 7,12-dimethylbenz(a)anthracene on EPCRA section 313 pursuant to EPCRA section 313 (d)(2)(B) based on the available carcinogenicity data for this chemical.

28. *1,2-Dimethylhydrazine* (CAS No. 00540–73–8). 1,2-Dimethylhydrazine is classified as a Group B2 carcinogen by EPA; i.e., the compound is a probable human carcinogen based on the lack of data in humans and sufficient evidence from animal studies. It is classified as a Group 2B carcinogen by IARC; i.e., possibly carcinogenic to humans. Chronic oral exposure to 1,2-dimethylhydrazine induced angiomas and angiosarcomas in Swiss mice, and oral administration induces angiosarcomas and lung adenomas in mice, angiosarcomas in hamsters, and intestinal tumors in rats. Single and multiple subcutaneous injections of 1,2-dimethylhydrazine induced tumors of the colon, large intestine, and kidney in rats and mice (Ref. 21). Therefore, there is sufficient evidence for including 1,2-dimethylhydrazine on EPCRA section 313 pursuant to EPCRA section 313(d)(2)(B) based on the available carcinogenicity data for this chemical.

29. *Ethylenebisdithiocarbamic acid, salts and esters* (NA). Ethylenebisdithiocarbamates are pesticides regulated under the Federal Insecticide, Fungicide, and Rodenticide Act (FIFRA). Products containing ethylenebisdithiocarbamates are restricted (Refs. 8, 30, and 33). A major toxicological concern from exposure to ethylenebisdithiocarbamic acid is the hazard to human health from the presence of ethylenethiourea, a contaminant, degradation product, and metabolite present in ethylenebisdithiocarbamic acid. Ethylenethiourea is carcinogenic, mutagenic, and teratogenic and causes thyroid toxicity (Refs. 37 and 42). No dose levels are available for these effects. Therefore, there may be sufficient evidence for listing ethylenebisdithiocarbamic acid, salts and esters on EPCRA section 313 pursuant to EPCRA section 313(d)(2)(B) based on the available chronic toxicity data. Additional toxicity data on ethylenebisdithiocarbamic acid, salts and esters may be available on EPA/Office of Pesticide Program's (OPP) One-Liner data base; however, it is confidential business information (CBI) under FIFRA.

30. *Ethylidene dichloride* (CAS No. 00075–34–3). Ethylidene dichloride is classified as a Group C carcinogen by EPA; i.e., the compound is a possible human carcinogen based on the lack of human data and limited evidence of carcinogenicity in two animal species (rats and mice) as shown by an increased incidence of mammary gland

adenocarcinomas and hemangiosarcomas in female rats and an increased incidence of hepatocellular carcinomas and benign uterine polyps in mice in NCI bioassay. Because of similarities in structure and target organs, the carcinogenicity evidence for 1,2-dichloroethane is considered to support the classification of ethylidene dichloride as a possible human carcinogen (Refs. 5 and 38). Therefore, there may be sufficient evidence for including ethylidene dichloride on EPCRA section 313 pursuant to EPCRA section 313(d)(2)(B) based on the available carcinogenicity data for this chemical.

31. *Ethyl methanesulfonate* (CAS No. 00062–50–0). Ethyl methanesulfonate, an alkylating agent, is classified as a Group B2 carcinogen by EPA; i.e., the compound is a probable human carcinogen based on sufficient evidence from animal studies. It is classified as a Group 2B carcinogen by IARC; i.e., possibly carcinogenic in humans. In animal studies, ethyl methanesulfonate produced mammary carcinomas and renal tumors in rats following oral administration. Intraperitoneal injection of ethyl methanesulfonate induced lung carcinomas, renal tumors, and adenocarcinomas of the mammary gland in rats, and intraperitoneal or subcutaneous injection produced lung adenomas in mice (Refs. 22 and 37). Therefore, there is sufficient evidence for including ethyl methanesulfonate on EPCRA section 313 pursuant to EPCRA section 313(d)(2)(B) based on the available carcinogenicity data for this chemical.

32. *Fluoranthene* (CAS No. 00206–44–0). Measured aquatic toxicity test data for fluoranthene ranges from 3.9 to greater than 560 ppm for fish 96–hour LC_{50}, 320 ppm for daphnid 48-hour LC_{50}, and between 45 and 54.6 ppm for the algae 96–hour EC_{50}. Only mysid shrimp show significant toxicity with a 96–hour LC_{50} of 40 ppb. Estimated aquatic toxicity values, derived with QSAR analysis using the equation for neutral organics and a log P of 4.95, are 0.25 ppm for the fish 96–hour LC_{50}, 0.33 ppm for the daphnid 48–hour LC_{50}, and 0.25 ppm for the algae 96–hour EC_{50}. A BCF of 1,130 was also estimated (Refs. 37, 41, and 45). Therefore, there is sufficient evidence for listing fluoranthene on EPCRA section 313 pursuant to EPCRA section 313(d)(2)(C) based on available ecotoxicity data for this chemical, because some of the aquatic toxicity values are less than 100 ppb and because of the persistence and the bioaccumulation potentials.

33. *Formic acid* (CAS No. 00064–18–6). The oral LD_{50} values for rats and mice are 1,210 mg/kg and 1,100 mg/kg, respectively. No chronic systemic, carcinogenicity, teratogenicity, or reproductive studies could be located in the available literature for formic acid. The principal hazard of formic acid is that of severe damage to the skin, eyes, or mucosal surfaces due to the chemical's corrosive properties. In humans, swallowing formic acid has caused a number of cases of severe poisoning and death with symptoms such as salivation, vomiting, burning sensation in the mouth, diarrhea, and pain (Ref. 38). Therefore, there may be sufficient evidence for listing formic acid on EPCRA section 313 pursuant to EPCRA section 313(d)(2)(A) based on the available acute toxicity data for this chemical.

34. *Glycidaldehyde* (CAS No. 00765–34–4). Glycidaldehyde is classified as a Group B2 carcinogen by EPA; i.e., the compound is a probable human carcinogen based on an increased incidence of unspecified tumors in rats and malignant tumors (fibrosarcomas, squamous cell carcinoma, adenocarcinomas, and undifferentiated sarcomas) in mice following subcutaneous injection and of skin carcinomas in mice following dermal application. The compound is classified as a Group 2B chemical by IARC; i.e., possibly carcinogenic to humans (Ref. 38). Therefore, there is sufficient evidence for listing glycidaldehyde on EPCRA section 313 pursuant to EPCRA section 313(d)(2)(B) based on the available carcinogenicity data for this chemical.

35. *Hexachlorophene* (CAS No. 00070–30–4). Dogs fed hexachlorophene at 0.75, 1.5, or 3.0 mg/kg/day in the diet for 13 weeks had status spongiosis in the brain, optic nerve, spinal cord, and sciatic nerve at all dose levels tested. A NOAEL was not established. In a 16–week dietary study, cerebral edema and vacuolization in the white matter in the CNS were observed at 5 mg/kg/day (Ref. 46). Therefore, there is sufficient evidence for listing hexachlorophene on EPCRA section 313 pursuant to EPCRA section 313(d)(2)(B) based on the available neurotoxicity data for this chemical.

Aquatic toxicity test data for hexachlorophene show that the measured 96–hour LC_{50} for the fathead minnow is 21 ppb whereas the estimated fish 96–hour LC_{50}, based on QSAR analysis using the equation for phenols and a log P of 7.78, is 20 ppb. Measured terrestrial toxicity data for wildlife indicate that the oral LD_{50} for bobwhite quail is 575 mg/kg (ppm) and the oral LD_{50} for female mallard ducks is 1,450 mg/kg (ppm) (Refs. 3, 37, and 45). There is sufficient evidence to list hexachlorophene on EPCRA section 313 pursuant to EPCRA section 313(d)(2)(C) based on the available ecotoxicity information for this chemical, because the estimated and measured aquatic acute toxicity values for hexachlorophene are less than 100 ppb.

36. *Hexachloropropene* (CAS No. 01888–71–7). No carcinogenicity, neurotoxicity, teratogenicity, reproductive toxicity, or chronic systemic toxicity studies could be located in the available literature. The 30–minute inhalation LC_{50} value in rats is 425 ppm, and the intraperitoneal LD_{50} value in rats is 400 mg/kg (Ref. 46). Therefore, there may be sufficient evidence for listing hexachloropropene on EPCRA section 313 pursuant to EPCRA section 313(d)(2)(A) based on the available toxicity data for this chemical.

The estimated aquatic toxicity values for hexachloropropene, based on QSAR analysis using the equation for neutral organics and a log P of 4.36, are 1.1 ppm for the fish 96–hour LC_{50}, 1.4 for the daphnid 48–hour LC_{50}, and 1.0 for the algae 96–hour EC_{50} (Ref. 45). There may be sufficient evidence to list hexachloropropene on EPCRA section 313 pursuant to EPCRA section 313(d)(2)(C) based on the available ecotoxicity information for this chemical, because the aquatic acute toxicity values for hexachloropropene are consistently greater than 1 ppm but less than 10 ppm and the chemical half-life is estimated to be greater than 15 days.

37. *Hydrogen sulfide* (CAS No. 07783–06–4). The available information for the respiratory effects of hydrogen sulfide in humans is taken largely from reports of accidental exposures and/or occupational exposures; therefore, it is not possible to determine NOAELs or LOAELs from these data. Acute inhalation exposures to low levels of hydrogen sulfide have resulted in respiratory irritation effects in humans. Acute exposures to large amounts of hydrogen sulfide (approximately 250 ppm or more) have produced pulmonary edema, unconsciousness, respiratory paralysis, asphyxiation, and/or death in some individuals. Similar effects are also noted in animals. In a subchronic study, inflammation of the nasal mucosa occurred in mice following 90–day inhalation of hydrogen sulfide, resulting in a NOAEL of 42.5 mg/m^3 (30.5 ppm; Human Equivalent Concentration (HEC) is 0.93 mg/m^3) and a LOAEL of 110 mg/

m^3 (80 ppm; HEC is 2.4 mg/m^3). Other respiratory effects, such as alveolar edema, infiltrates in the bronchioles, cellular necrosis, hyperplasia, and exfoliation in various respiratory tissues, have been reported in rats (Ref. 38). Therefore, there is sufficient evidence for listing hydrogen sulfide on EPCRA section 313 pursuant to EPCRA section 313(d)(2)(B) based upon the available respiratory toxicity data for this chemical.

Aquatic toxicity test data for hydrogen sulfide show that measured fish 96–hour LC_{50} values range from 7 to 776 ppb (Ref. 3). There is sufficient evidence to list hydrogen sulfide on EPCRA section 313 pursuant to EPCRA section 313(d)(2)(C) based on the available ecotoxicity information for this chemical, because the acute fish toxicity values for hydrogen sulfide include values less than 100 ppb.

38. *Indeno[1,2,3-cd]pyrene* (CAS No. 00193–39–5). Indeno[1,2,3-cd]pyrene is classified as a Group B2 carcinogen by EPA; i.e., the compound is a probable human carcinogen based on increased incidence of epidermoid carcinomas in a lung implantation study in rats, skin tumors from dermal application in several strains of mice, and sarcomas following subcutaneous injection in mice. Also, positive results were obtained by indeno[1,2,3-cd]pyrene in bacterial gene mutation assays. The compound is classified as a Group 2B carcinogen by IARC; i.e., possibly carcinogenic to humans (Refs. 37 and 38). Therefore, there is sufficient evidence for listing indeno[1,2,3-cd]pyrene on EPCRA section 313 pursuant to EPCRA section 313(d)(2)(B) based on the available carcinogenicity data for this chemical.

39. *Kepone* (CAS No. 00143–50–0). Kepone is classified as a Group B2 carcinogen by EPA, i.e., the compound is a probable human carcinogen. It is classified as a Group 2B carcinogen by IARC; i.e., possibly carcinogenic to humans. The compound has been shown to induce hepatocellular carcinomas in mice and rats following dietary exposure (Refs. 24 and 37). Kepone is a canceled pesticide (Ref. 30). Therefore, there is sufficient evidence for listing kepone on EPCRA section 313 pursuant to EPCRA section 313(d)(2)(B) based on the available carcinogenicity data for this chemical.

Aquatic toxicity test data for kepone show that the measured 48–hour EC_{50} for daphnids is 260 ppb and that the 96–hour LC_{50} values for fish range from 30 to 72 ppb. The BCF for kepone in fish is greater than 1,000 (1,100 to 2,200 in fathead minnow) (Ref. 37). Because kepone is very stable in the environment (no degradation after 56 days) and the aquatic toxicity is less than 100 ppb, there is sufficient evidence for listing kepone on EPCRA section 313 pursuant to EPCRA section 313(d)(2)(C) based on the available ecotoxicity data for this chemical.

40. *Lasiocarpine* (CAS No. 00303–34–4). Lasiocarpine is classified as a Group B2 carcinogen by EPA; i.e., the compound is a probable human carcinogen. Lasiocarpine is classified as a Group 2B carcinogen by IARC; i.e., possibly carcinogenic to humans. Lasiocarpine induced angiosarcoma of the liver and metastatic angiosarcomas in the lungs of rats via dietary ingestion. Lasiocarpine induced hepatocellular carcinomas, squamous-cell carcinomas of the skin, pulmonary adenomas, and tumors in the testes and intestines in rats via intraperitoneal injection. In an NTP bioassay, lasiocarpine was carcinogenic to male and female rats (Refs. 25 and 37). Therefore, there is sufficient evidence for listing lasiocarpine on EPCRA section 313 pursuant to EPCRA section 313(d)(2)(B) based on the available carcinogenicity data for this chemical.

41. *Malononitrile* (CAS No. 00109–77–3). Humans injected with 1 to 6 mg/kg malononitrile for treatment of schizophrenia and depression exhibited tachycardia, nausea, flushing, vomiting, headache, shivering, muscle spasms, and numbness within minutes of exposure. Subcutaneous injection of 14 mg/kg malononitrile produced dyspnea and convulsions in rats. Acute exposure to 200 to 300 mg/m^3 (0.2 to 0.3 mg/L) malononitrile induced restlessness, changes in respiratory rate, incoordination, tremors, convulsions and death in mice and rats. Some of these effects may have been secondary to cyanosis which accompanied the effects in both humans and animals (Ref. 37). None of these data are sufficient to derive NOAEL or LOAEL values. However, taken together, there is sufficient evidence for listing malononitrile on EPCRA section 313 pursuant to EPCRA section 313(d)(2)(B) based on the available neurotoxicity data for this chemical.

Aquatic toxicity test data for measured fish 96–hour LC_{50} values range from 0.57 ppm to 1.8 ppm. Estimated 48–hour LC_{50} for daphnid derived from QSAR analysis is 0.64 ppm. The estimated hydrolysis half-life is 21 days and the estimated photolysis half-life is 2.7 years. Based on a water solubility of 133,000 mg/L, the BCF is estimated to be 0.8 (Refs. 37, 41, and 45). There may be sufficient evidence to list malononitrile on EPCRA section 313 pursuant to EPCRA section 313(d)(2)(C) based on the available ecotoxicity data for this chemical, because the aquatic toxicity values for malononitrile are less than 1 ppm but greater than 100 ppb.

42. *Melphalan* (CAS No. 00148–82–3). Melphalan is classified as a Group 1 carcinogen by IARC; the agent is carcinogenic to humans. Leukemia and reticulosarcoma developed in cancer patients following treatment with melphalan (Refs. 37 and 46). Dermal exposure to melphalan induced papillomas and skin carcinoma in mice. Lung tumors and lymphosarcomas were induced in mice and peritoneal sarcomas were induced in rats following intraperitoneal injection of melphalan. In an NCI bioassay, melphalan was carcinogenic to mice and rats. Melphalan is considered as a known carcinogen by NTP. Therefore, there is sufficient evidence for listing melphalan on EPCRA section 313 pursuant to EPCRA section 313(d)(2)(B) based on the available carcinogenicity data for this chemical.

43. *Methacrylonitrile* (CAS No. 00126–98–7). In dogs, methacrylonitrile induced convulsions, loss of motor control in the hindlimbs, and histopathological brain lesions following a 90–day inhalation exposure, resulting in a NOAEL of 9 mg/m^3 (3.2 ppm; the adjusted dose (ADJ) is 0.34 mg/kg/day) and a LOAEL of 24 mg/m^3 (8.8 ppm; the ADJ is 0.85 mg/kg/day). No toxic effects occurred in rats when exposed to higher levels than those given to the dogs. In other studies, convulsions have been reported in rats and mice when acute exposures were in excess of 600 ppm methacrylonitrile (Ref. 38). Therefore, there is sufficient evidence for listing methacrylonitrile on EPCRA section 313 pursuant to EPCRA section 313(d)(2)(B) based upon the available neurotoxicity data for this chemical.

44. *Methyl chlorocarbonate* (CAS No. 00079–22–1). No chronic systemic, carcinogenicity, teratogenicity, or reproductive studies could be located in the available literature for methyl chlorocarbonate. A 10–minute exposure to 190 ppm (1 mg/L) by inhalation is reported to be lethal in humans; other conditions of the exposure were not reported. The 1–hour inhalation LC_{50} for rats is 88 ppm (0.5 mg/L) (Ref. 38). Therefore, there may be sufficient evidence for listing methyl chlorocarbonate on EPCRA section 313 pursuant to EPCRA section 313(d)(2)(A) based on the available acute toxicity data for this chemical.

45. *3-Methylcholanthrene* (CAS No. 00056–49–5). There are numerous studies that suggest that 3-methylcholanthrene is carcinogenic to mice, rats, rabbits,

guinea pigs, hamsters, dogs, and cats exposed via the oral and dermal routes and by injection at various sites. For instance, oral exposures have induced lymphoma in the blood of rats and mice; lung tumors in mice; and skin tumors in rats and hamsters. Dermal exposures have induced skin tumors in rats, mice, and hamsters. Tumors at the site of injection have occurred in the skin, brain, lungs, reproductive organs, musculoskeletal system, and kidneys in rats, mice, rabbits, and guinea pigs. Finally, 3-methylcholanthrene was positive in a battery of mutagenicity assays (Ref. 46). Therefore, there is sufficient evidence for listing 3-methylcholanthrene on EPCRA section 313 pursuant to EPCRA section 313(d)(2)(B) based on the available carcinogenicity data for this chemical.

Measured aquatic toxicity test data indicate that the oyster 7–day BCF is 3. The estimated aquatic toxicity, based on QSAR analysis, is 38.5 ppb for the fish 96–hour LC_{50} (Refs. 3 and 41). There is sufficient evidence for listing 3-methylcholanthrene on EPCRA section 313 pursuant to EPCRA section 313(d)(2)(C) based on the available ecotoxicity information for this chemical, because the estimated aquatic acute toxicity of 3-methylcholanthrene is less than 100 ppb.

46. *Methyl mercaptan* (CAS No. 00074–93–1). Methyl mercaptan (thiomethanol) induced coma in one individual following daily inhalation exposures for 1 week (no dose levels available). Three workers experienced adverse CNS effects following exposure to an unknown level of a mixture of chemicals containing methyl mercaptan. These effects include unconsciousness, dizziness, convulsions, apnea, and general weakness. Coma induction also was noted in rats following exposure to methyl mercaptan via acute inhalation, resulting in a NOAEL of 1,200 ppm (2.3 mg/L) and a LOAEL of 1,400 ppm (2.7 mg/L). Intraperitoneal injection of 4.8 mg/kg thiomethanol also induced coma in rats (Refs. 1 and 6). Therefore, there may be sufficient evidence for listing methyl mercaptan on EPCRA section 313 pursuant to EPCRA section 313(d)(2)(B) based upon the available neurotoxicity data for this chemical.

47. *N-Methyl-N'-nitro-N-nitrosoguanidine* (CAS No. 00070–25–7). N-methyl-N'-nitro-N-nitrosoguanidine (MNNG) is classified as a Group B2 carcinogen by EPA; i.e., the compound is a probable human carcinogen. N-methyl-N'-nitro-N-nitrosoguanidine is classified as a Group 2A carcinogen by IARC; probably carcinogenic to humans. N-methyl-N'-nitro-N-nitrosoguanidine induced gastrointestinal tumors (adenomas, adenocarcinomas, carcinomas, fibrosarcomas, papillomas, sarcomas) in mice, rats, rabbits, hamsters, and dogs via oral exposure (in drinking water, intragastrically, or by gavage). In addition, skin papillomas, fibrosarcomas, and carcinomas were noted in mice and rats following dermal application of N-methyl-N'-nitro-N-nitrosoguanidine. Finally, the compound was genotoxic in a battery of *in vivo* and *in vitro* assays (Refs. 23 and 37). Therefore, there is sufficient evidence for listing N-methyl-N'-nitro-N-nitrosoguanidine on EPCRA section 313 pursuant to EPCRA section 313(d)(2)(B) based on the available carcinogenicity data for this chemical.

48. *2-Methylpyridine* (CAS No. 00109–06–8). In humans, 2-methylpyridine is reported to induce weight loss, nausea, diarrhea, vomiting, weakness, ataxia, unconsciousness, facial flushing, skin rash, giddiness, headache, and increases in heartand respiration rates. However, no information was provided as to the incidence of these effects or the exposure conditions. Two of six rats surviving a single oral dose of 950 mg/kg 2-methylpyridene showed signs of encephalomalacia (areas devoid of neuronal elements, neurons, and supportive cells, normally found in brain tissues). In another study in rats, exposure to 300 mg/kg/day of the chemical for 10 days decreased the number of cells of the hypothalamic-hypophyseal neurosecretory system. Doses (route unspecified) of 2-methylpyridene as low as 0.0025 mg/kg for 6 months induced functional and dystrophic changes in the cerebral cortex and morphological changes in neurons. The highest dose (0.05 mg/kg) resulted in constant demyelination of nerve pathways in the brain. In mice, oral sublethal doses induced short periods of excitation followed by depression of the CNS and sleepiness (Refs. 12 and 37). Therefore, there is sufficient evidence for listing 2-methylpyridine on EPCRA section 313 pursuant to EPCRA section 313(d)(2)(B) based on the available neurotoxicity data for this chemical.

49. *Methylthiouracil* (CAS No. 00056–04–2). Methylthiouracil is classified as a B2 carcinogen by EPA; i.e., the compound is a probable human carcinogen. Methylthiouracil is classified as a Group 2B carcinogen by IARC; i.e., possibly carcinogenic to humans. Methylthiouracil induced thyroid adenomas in mice, rats, and hamsters and thyroid carcinomas in hamsters via oral dietary or drinking water exposure. In addition, pituitary and thyroid adenomas and tumors at the site of implantation were induced in rats via subcutaneous implantation of methylthiouracil. Also, kidney adenomas and adenocarcinomas were induced in rats via oral dietary or drinking water exposure to methylthiouracil (Refs. 26 and 37). Therefore, there is sufficient evidence for listing methylthiouracil on EPCRA section 313 pursuant to EPCRA section 313(d)(2)(B) based on the available carcinogenicity data for this chemical.

50. *Mitomycin C* (CAS No. 00050–07–7). Mitomycin C is classified as a Group B2 carcinogen by EPA; i.e., the compound is probably carcinogenic in humans. It is classified as a Group 2B carcinogen by IARC; i.e., the compound is a possible human carcinogen based on sufficient evidence of carcinogenicity in animals and the lack of human data. Mitomycin C produced tumors in mice treated by subcutaneous injection (local sarcomas) and in rats treated by intraperitoneal injection (peritoneal sarcomas), and intravenous injection (malignant tumors). In an NCI bioassay, there was clear evidence of the carcinogenicity of mitomycin C to rats (Ref. 37). Therefore, there is sufficient evidence for listing mitomycin C on EPCRA section 313 pursuant to EPCRA section 313(d)(2)(B) based on the available carcinogenicity data for this chemical.

51. *N-Nitrosodiethanolamine* (CAS No. 01116–54–7). N-Nitrosodiethanolamine is classified as a Group B2 carcinogen by EPA; i.e., the compound is a probable human carcinogen based on an increased incidence of liver tumors and tumors of the nasal cavity in two strains of rats via oral exposure in drinking water. Carcinomas of the nasal cavity and papillomas of the trachea were induced in hamsters following either subcutaneous injection, oral swabbing, or skin painting exposures to N-nitrosodiethanolamine. The compound is classified as a Group 2B carcinogen by IARC; i.e., possibly carcinogenic to humans. In an NCI bioassay, there was clear evidence of its carcinogenicity in rats (Refs. 37, 38, and 46). Therefore, there is sufficient evidence for listing N-nitrosodiethanolamine on EPCRA section 313 pursuant to EPCRA section 313(d)(2)(B) based on the available carcinogenicity data for this chemical.

52. *N-Nitroso-N-methylurethane* (CAS No. 00615–53–2). N-Nitroso-N-methylurethane is classified by EPA as a Group B2 carcinogen; i.e., the compound is a probable human carcinogen. N-Nitroso-N-methylurethane is classified as Group 2B carcinogen by

IARC; i.e., the compound is possibly carcinogenic to humans. Exposures in utero, by either intravenous or intraperitoneal injection, induced tumors of the nervous system, kidney, lungs, mammary and adrenal glands, and thyroid in the offspring of rats. Drinking water and gavage exposures induced tumors of the forestomach and the esophagus in rats; intragastric exposures induced tumors of the forestomach and esophagus in hamsters; and drinking water exposures induced stomach tumors in guinea pigs. Tumors of the respiratory system, primarily the lung, were observed in guinea pigs via drinking water; in mice, guinea pigs, and hamsters via subcutaneous injection; in mice via intraperitoneal injection; and in rats and rabbits via intravenous injection (Refs. 27, 37, and 46). Therefore, there is sufficient evidence for listing N-nitroso-N-methylurethane on EPCRA section 313 pursuant to EPCRA section 313(d)(2)(B) based on the available carcinogenicity data for this chemical.

53. *N-Nitrosopyrrolidine* (CAS No. 00930–55–2). N-Nitrosopyrrolidine is classified as a Group B2 carcinogen by EPA; i.e., the compound is a probable human carcinogen based on the induction of liver carcinomas and/or adenomas in two strains of rats and papillary mesotheliomas of the testes in one strain of rat via oral exposure. Also, there was a low incidence of lung adenomas in mice via drinking water exposure. The compound is classified as a Group B2 carcinogen by IARC; i.e., it is possibly carcinogenic to humans (Ref. 38). Therefore, there is sufficient evidence for listing N-nitrosopyrrolidine on EPCRA section 313 pursuant to EPCRA section 313(d)(2)(B) based on the available carcinogenicity data for this chemical.

54. *5-Nitro-o-toluidine* (CAS No. 00099–55–8). 5-Nitro-o-toluidine is classified as a Group C carcinogen by EPA; i.e., the compound is possibly carcinogenic to humans. It is classified as a Group 3 chemical by IARC, based on limited evidence of carcinogenicity in animals. In an NCI bioassay, hepatocarcinomas, hemangiomas, and hemangiosarcomas were observed in mice following dietary exposure. No carcinogenic effects were noted in rats when exposed to lower doses than those used in mice. In addition, two structural analogues of 5-nitro-o-toluidine, o-toluidine, and 2-methoxy-5-nitro-aniline, were carcinogenic in both rats and mice. 5-Nitro-o-toluidine is expected to be bioactivated and to exert its carcinogenicity via the same mechanism as these two aromatic compounds. 5-Nitro-o-toluidine also has been shown to be mutagenic in the Ames test (Refs. 34 and 37). Therefore, there may be sufficient evidence for listing 5-nitro-o-toluidine on EPCRA section 313 pursuant to EPCRA section 313(d)(2)(B) based on the available carcinogenicity data for this chemical and on analogy to similar aromatic compounds.

55. *Paraldehyde* (CAS No. 00123–63–7). In humans, paraldehyde induces coma, severe hypotension, cardiac failure, sciatic nerve injury, and CNS depression. Chronic exposure may produce hallucinations; delusions; memory, intellect, and speech impairment; unsteady gait, tremors, anorexia, and weight loss. Nerve injury resulted from intramuscular exposure; other routes of exposure were not reported. Exposure levels were not reported for these effects. Convulsions occurred in a man following intramuscular exposure to 568 mg/kg paraldehyde (Refs. 37 and 46). Because the dose levels were not indicated in case studies, the lowest level for the CNS effects in humans could not be determined. Therefore, the available evidence may be sufficient for listing paraldehyde on EPCRA section 313 pursuant to section 313(d)(2)(B) based on the available neurotoxicity data.

56. *Pentachlorobenzene* (CAS No. 00608–93–5). The measured aquatic toxicity test data for pentachlorobenzene ranged from 0.25 to 0.83 ppm for fish 96–hour LC_{50} to 5.3 ppm for the daphnid 48–hour LC_{50}. A 21–day daphnid chronic LC_{50} of 0.24 ppm was also determined. BCFs for fish ranged from 3.3 to 55 for 31–day tests. Estimated aquatic toxicity values, based on QSAR analysis using the equation for neutral organics and a log P of 5.71, are 0.06 ppm for the fish 96–hour LC_{50}, 0.08 ppm for the daphnid 48–hour LC_{50}, and 0.07 ppm for the algae 96–hour EC_{50}. The estimated chemical half-life of pentachlorobenzene is 0.5 to 1 year; the estimated volatilization half-life from water is 60 days; and the atmospheric photolysis half-life is estimated to be 271 days (Refs. 3 and 45). Based on measured and estimated acute aquatic toxicity values that are consistently less than 1 ppm and the persistence of pentachlorobenzene, there is sufficient evidence for listing pentachlorobenzene on EPCRA section 313 pursuant to EPCRA section 313(d)(2)(C) based on the available ecotoxicity data for this chemical.

In rats, pentachlorobenzene induced anomalous rib number in the offspring of female rats that were exposed by stomach tube to 50 to 200 mg/kg/day during days 6 to 15 of gestation. At the high dose, sternal defects and decreased mean fetal weight were also noted in these offspring. Pentachlorobenzene also induced tremors in the offspring of rats following maternal dietary exposure to greater than 250 to 1,000 ppm. The high dose was lethal for most of these offspring. It is not known if the tremors were the result of gestational exposure or exposure through lactation. No maternal effects were noted. Pentachlorobenzene induced unspecified developmental effects and decreased fetal body weight in the offspring of rats following maternal dietary exposure during gestation (Ref. 37). Duration and exposure levels were not reported and these effects did not occur in mice. Therefore, there may be sufficient evidence for listing pentachlorobenzene on EPCRA section 313 pursuant to EPCRA section 313(d)(2)(B) based on the available developmental toxicity data for this chemical.

57. *Pentachloroethane* (CAS No. 00076–01–7). Pentachloroethane is reported to induce headaches, dizziness, confusion, drowsiness, convulsion, coma, and respiratory arrest in humans. No exposure information was provided. Exposure to pentachloroethane induced narcosis preceded by restlessness and excitement in dogs following repeated inhalation of 10 ml and CNS depression in cats following inhalation of 146 ppm (1.5 mg/L) 8 to 9 hours daily for 23 days. Pentachloroethane induced the behavioral effects of altered sleep in rats and dogs; the rats also exhibited ataxia. The LD_{50} values associated with these effects are 920 mg/kg in rats following subcutaneous injection, and 500 mg/kg in dogs following oral exposure (Refs. 7, 37, and 46). Therefore, there may be sufficient evidence for listing pentachloroethane on EPCRA section 313 pursuant to EPCRA section 313(d)(2)(B) based on the available neurotoxicity data for this chemical.

58. *Phenacetin* (CAS No. 00062–44–2). Phenacetin is classified as a Group 2A carcinogen by IARC; i.e., the compound is probably carcinogenic to humans. It has been associated with renal tumors in humans and animals. In humans, carcinoma of the renal pelvis, ureter, and bladder were noted in chronic users of phenacetin (Ref. 37). Therefore, there is sufficient evidence for listing phenacetin on EPCRA section 313 based on the available carcinogenicity data for this chemical.

59. *Pronamide* (CAS No. 23950–58–5). There are several studies that suggest that pronamide induces liver tumors in mice following oral exposure to doses as low as 500 ppm (Refs. 9, 10, 29, and 37).

Therefore, there may be sufficient evidence for listing pronamide on EPCRA section 313 pursuant to EPCRA section 313(d)(2)(B) based on the available carcinogenicity data for this chemical. The use of pronamide as a pesticide is restricted under FIFRA (Refs. 9, 10, and 30). Additional toxicity data may be available on EPA's One-Liner data base; however, it is CBI under FIFRA.

60. *Reserpine* (CAS No. 00050–55–5). Reserpine induced coma, hypothermia, and bradycardia in three children who ingested large doses of the drug (specific quantity not specified). In dogs, CNS depression, muscle tremors, and parkinsonian-like syndrome resulted from daily exposure (route unspecified) to 18 to 39 micrograms/kilogram (ug/kg) for up to 1 year. In another study in dogs, chronic oral administration of low dose levels of reserpine (0.137 mg/kg) caused CNS depression and muscle tremors (Ref. 37). Therefore, there is sufficient evidence for listing reserpine on EPCRA section 313 pursuant to EPCRA section 313(d)(2)(B) based on the available neurotoxicity data for this chemical.

61. *Streptozotocin* (CAS No. 18883–66–4). Streptozotocin is classified as a Group 2B carcinogen by IARC; i.e., the compound is possibly carcinogenic to humans. No carcinogenicity data are available in humans; however, there is sufficient evidence of carcinogenicity in animals. In male and female mice, intraperitoneal injection of streptozotocin induced tumors of the lungs, kidneys (males only), and uterus (females only). Kidney tumors and pancreatic cell tumors also resulted from intravenous injection of streptozotocin in rats. In addition, hamsters developed tumors of the bile duct and liver following intraperitoneal injection of streptozotocin (Refs. 37 and 44). Therefore, there is sufficient evidence for listing streptozotocin on EPCRA section 313 pursuant to EPCRA section 313(d)(2)(B) based on the available carcinogenicity toxicity data for this chemical.

62. *1,2,4,5-Tetrachlorobenzene* (CAS No. 00095–94–3). In rats, 1,2,4,5-tetrachlorobenzene induced kidney lesions in males following dietary exposure for 13 weeks, resulting in a LOAEL of 50 ppm (3.4 mg/kg/day). In addition, liver lesions were observed in female rats exposed to 500 ppm under the same conditions. In another study in rats, 1,2,4,5-tetrachlorobenzene caused liver and kidney pathology following 28–day exposure to doses as low as 3.4 mg/kg/day. The NOAEL for this study was 0.4 mg/kg/day. In the same study, 1,2,4,5-tetrachlorobenzene (32 mg/kg/day) significantly increased liver weights (20 to 30 percent) and induced hepatic microsomal enzymes 2 to 12-fold (Ref. 38). Although systemic toxicity in other animal species could not be located in the available literature on 1,2,4,5-tetrachlorobenzene, there is sufficient evidence for listing 1,2,4,5-tetrachlorobenzene on EPCRA section 313 pursuant to EPCRA section 313(d)(2)(B) based upon the available hepatotoxicity and renal toxicity data for this chemical.

The measured aquatic toxicity test data for 1,2,4,5-tetrachlorobenzene shows that acute fish 96–hour LC_{50} values range from 1.2 to 10 ppm whereas the daphnid 48–hour LC_{50} value is greater than 530 ppm. Estimated aquatic toxicity values, based on QSAR analysis using the equation for neutral organics and a log P of 4.99, are 0.25 ppm for the fish 96–hour LC_{50}, 0.33 ppm for the daphnid 48–hour LC_{50}, and 0.24 ppm for the algae 96–hour EC_{50}. A fish BCF of 3,484 was also estimated based on the log P (Refs. 3 and 45). Estimated aquatic toxicity values for fish, daphnid, and algae are all greater than 100 ppb but less than 1 ppm. Based on the estimated aquatic acute toxicity of 1,2,4,5-tetrachlorobenzene, there may be sufficient evidence for listing 1,2,4,5-tetrachlorobenzene on EPCRA section 313 pursuant to EPCRA section 313(d)(2)(C) based on the available ecotoxicity information for this chemical.

63. *1,1,1,2-Tetrachloroethane* (CAS No. 00630–20–6). 1,1,1,2-Tetrachloroethane is classified as a Group C carcinogen by EPA; i.e., the compound is a possible human carcinogen based on an increased incidence of combined hepatocellular adenomas and carcinomas in female mice following oral exposure. The maximum tolerated dose (MTD) was exceeded at the high dose. There is inadequate evidence from human studies. The compound is classified as a Group 3 chemical by IARC; i.e., it is not classifiable as to its carcinogenicity to humans. The study conducted by NTP was inadequate for evaluating carcinogenicity (Refs. 38 and 46). Therefore, there may be sufficient evidence for listing 1,1,1,2-tetrachloroethane on EPCRA section 313 pursuant to EPCRA section 313(d)(2)(B) based on the available carcinogenicity data for this chemical.

Oral exposure to 250 mg/kg/day of 1,1,1,2-tetrachloroethane caused inactivity and incoordination in rats. No NOAEL was established. CNS involvement (sluggishness, incoordination, and weakness) also was seen in mice exposed to 500 mg/kg/day of 1,1,1,2-tetrachloroethane via the oral route; the NOAEL was 250 mg/kg/day (Ref. 38). Therefore, there may be sufficient evidence for listing 1,1,1,2-tetrachloroethane on EPCRA section 313 pursuant to EPCRA section 313(d)(2)(B) based on the available neurotoxicity data for this chemical.

64. *Thiram (Thioperoxydicarbonic diamide)* (CAS No. 00137–26–8). The measured aquatic toxicity test data for the fish 96–hour LC_{50} range from 0.67 to 270 ppb, with a daphnid 48–hour LC_{50} of 210 ppb, and an algae 96–hour EC_{50} of 1,000 ppb. A daphnid 21–day chronic LC_{50} of 8 ppb was also measured. Estimated aquatic toxicity values, based on QSAR analysis, are 7.0 to 10.1 ppm for the fish 96–hour LC_{50} and 8.2 ppm for daphnid 96–hour LC_{50} (Refs. 3 and 41). Based on measured acute aquatic toxicity values of less than 100 ppb and an estimated chemical half-life of greater than 14 days, there is sufficient evidence to list thiram on EPCRA section 313 pursuant to EPCRA section 313(d)(2)(C) based on the available ecotoxicity information for this chemical.

In rats, thiram (thioperoxydicarbonic diamide) induced weakness, ataxia, varying degrees of hindlimb paralysis, and calcified masses in the basal ganglia and in the cerebellum following dietary exposure for 2 years, resulting in a LOAEL of 300 ppm (The ADJ is 15 mg/kg/day) and a NOAEL of 100 ppm (The ADJ is 5 mg/kg/day). In another study in rats, dietary exposure to thioperoxydicarbonic diamide for 80 weeks resulted in alopecia, ataxia, and hind limb paralysis. The LOAEL and NOAEL were 25.5 mg/kg/day and 6.1 mg/kg/day, respectively. In another study, thiram caused convulsions, thyroid hyperplasia, and calcification of the cerebellum, hypothalamus, and medulla oblongata in rats following dietary exposure for 2 years (Refs. 37 and 38). No NOAEL or LOAEL values were available for these data. Although neurotoxicity data in other animal species could not be located in the available literature, there may be sufficient evidence for listing thiram on EPCRA section 313 pursuant to EPCRA section 313(d)(2)(B) based on the available neurotoxicity data for this chemical.

65. *p-Toluidine* (CAS No. 00106–49–0). Although o-toluidine has been shown to be carcinogenic in rats and mice, there is only limited evidence on the carcinogenicity of p-toluidine (induction of liver tumors in male and female mice). p-Toluidine is expected to be a

weaker carcinogen than o-toluidine because it is believed that the ortho methyl group contributes to the carcinogenic effects of o-toluidine. Previous structure activity relationship analysis has suggested that the ortho methyl group in o-toluidine and in other aromatic amines appears to have an enhancing effect on the activation of the amino group in these compounds. In addition, p-toluidine was not mutagenic in a number of genotoxicity studies (Refs. 13 and 42). Therefore, there may be sufficient evidence for listing p-toluidine on EPCRA section 313 pursuant to EPCRA section 313(d)(2)(B) based on the limited carcinogenicity data available for this chemical and based on analogy with o-toluidine.

66. *2,4,5-TP (Silvex)* (CAS No. 00093–72–1). The use of 2,4,5-TP is canceled pursuant to FIFRA primarily due to 2,4,5-TP's contamination with dioxins. 2,4,5-TP as a separate chemical has not been widely studied.

Cleft palate was observed in mice fed 379 mg/kg 2,4,5-TP daily during gestation. At 50 mg/kg/day, reduced pup weight and incomplete skull ossification were noticed in rats. The NOAEL for developmental toxicity was 25 mg/kg/day (Ref. 38). Therefore, there may be sufficient evidence for listing 2,4,5-TP on EPCRA section 313 pursuant to EPCRA section 313(d)(2)(B) based on the available developmental toxicity data for this chemical.

Unspecified histopathological changes in the liver were observed in dogs fed diets containing 2,4,5-TP for 2 years. A LOAEL of 100 ppm (2.5 mg/kg/day) and a NOAEL of 30 ppm (0.75 mg/kg/day) were determined. However, no adverse effects were seen in rats fed diets containing 0, 10, 30, 100 ppm 2,4,5-TP for 2 years. There may be sufficient evidence for listing 2,4,5-TP on EPCRA section 313 pursuant to EPCRA section 313(d)(2)(B) based on the available toxicity data for this chemical.

Aquatic toxicity test data indicate that measured 96–hour LC_{50} values for fish range from 0.35 ppm for mosquito fish to 86 ppm for bluegills; the daphnid 48–hour LC_{50} is 140 ppm; and the oyster 48–hour EC_{50} is 5.9 ppm. These data indicate that 2,4,5-TP is highly toxic to some aquatic organisms at values less than 1 ppm but only moderately toxic to other organisms, such as daphnids where the values exceed 100 ppb (Ref. 3). Therefore, because the aquatic toxicity values for 2,4,5-TP are less than 1 ppm but greater than 100 ppb, there may be sufficient evidence to list 2,4,5-TP on EPCRA section 313 pursuant to EPCRA section 313(d)(2)(C) based on the available ecotoxicity information for this chemical.

67. *1,3,5-Trinitrobenzene* (CAS No. 00099–35–4). In rats, oral exposure to 1,3,5-trinitrobenzene induced depression, hyperpnea, gasping, salivation, cyanosis, loss of normal reflexes, tachycardia, coma, and death, resulting in an approximate LD_{50} of 505 mg/kg. A lower oral LD_{50} value (280 mg/kg) was reported for rats in a more recent study (Refs. 36, 38, and 46). Therefore, there may be sufficient evidence for listing 1,3,5-trinitrobenzene on EPCRA section 313 pursuant to EPCRA section313(d)(2)(B) based on the neurotoxicity data available for this chemical.

68. *Trypan blue* (CAS No. 00072–57–1). Trypan blue is classified as a Group B2 carcinogen by EPA; i.e., it is probably carcinogenic to humans, based on sufficient evidence in animals and no evidence in humans. The compound is classified as a Group 2B carcinogen by IARC; i.e., the compound is possibly carcinogenic to humans. Following subcutaneous injection in rats, trypan blue induced tumors of the reticuloendothelial system, hepatic lymph nodes, mesenteric lymph nodes, thymus, thymic lymph nodes, nonabdominal lymph nodes, and kidney (Refs. 37 and 46). Therefore, there is sufficient evidence for listing trypan blue on EPCRA section 313 pursuant to EPCRA section 313(d)(2)(B) based on the available carcinogenicity data for this chemical.

69. *Uracil mustard* (CAS No. 00066–75–1). Uracil mustard is classified as a Group B2 chemical by EPA; i.e., it is a possible human carcinogen. The compound is classified as a Group 2B carcinogen by IARC; i.e., it is possibly carcinogenic to humans. In an NCI bioassay, uracil mustard was carcinogenic to mice and rats. No carcinogenicity data are available in humans; however, there is sufficient evidence of carcinogenicity in animals. Following intraperitoneal injection, uracil mustard induced lung adenomas and adenocarcinomas in mice. In another study in mice, uracil mustard induced lung tumors, liver tumors, ovarian tumors, and lymphomas following intraperitoneal injection. Following intraperitoneal injection in rats, uracil mustard induced lymphomas, pancreatic tumors, ovarian tumors, and mammary carcinomas (Refs. 37 and 46). Therefore, there is sufficient evidence for listing uracil mustard on EPCRA section 313 pursuant to EPCRA section 313(d)(2)(B) based on the available carcinogenicity data for this chemical.

70. *Warfarin and salts (NA).* Several studies in humans suggest that warfarin induces fetal death, and/or structural abnormalities in fetuses and newborns following oral exposure (doses as low as 8.4 mg/kg) or intramuscular injection (12 mg/kg). In mice, warfarin affected female fertility causing preimplantation mortality following intravenous injection (240 mg/kg). In rabbits, intravenous injection of warfarin (10 mg/kg) to pregnant does resulted in structural abnormalities of fetuses and stillbirth (Refs. 38 and 46). Therefore, there is sufficient evidence for listing warfarin on EPCRA section 313 pursuant to EPCRA section 313(d)(2)(B) based on the available reproductive/developmental toxicity data for this chemical.

C. Chemicals that Are Insufficient for Listing

EPA is not proposing to add those chemicals listed below to EPCRA section 313 because the available information does not indicate that these chemicals meet the toxicity criteria of section 313(d)(2).

All chemicals are listed as RCRA hazardous wastes at 40 CFR 261.33(f) for toxicity only unless otherwise noted.

1. *Acetyl chloride* (CAS No. 00075–36–5). Acetyl chloride is listed at 40 CFR 261.33(f) for corrosivity, reactivity, and toxicity. Acetyl chloride hydrolyzes in moist air to acetic acid and hydrogen chloride. Acute toxicity data in humans indicate that inhalation of 2 ppm acetyl chloride is irritating to humans. Acetyl chloride is classified as a Group D chemical by EPA; i.e., the compound is not classifiable as to human carcinogenicity based on the lack of human or animal data (Refs. 37 and 38). No data regarding the systemic toxicity of acetyl chloride could be located. Therefore, there is insufficient evidence for listing acetylchloride on EPCRA section 313 based on the available toxicity and carcinogenicity data for this chemical.

Aquatic toxicity test data give measured 96–hour LC_{50} values of 42 ppm for the fathead minnow (Refs. 3 and 41). Because this aquatic toxicity value is greater than 1 ppm and the BCF is less than 1,000, there is insufficient evidence for listing acetyl chloride on EPCRA section 313 based on available ecotoxicity information for this chemical.

2. *Chloral* (CAS No. 00075–87–6). In a mouse oral subchronic study, administration of chloral in water was associated with dose-related increased relative liver weights in males, increases in serum lactate dehydrogenase (LDH), serum glutamic oxalacetic transaminase (SGOT), microsomal cytochrome b5 content, aminopyrine N-demethylase, and aniline hydroxylase activities.

These results suggest that the liver may be a target organ. However, no histopathology was performed and a NOAEL was not determined. The LOAEL was 15.7 mg/kg/day (Ref. 38). Therefore, there is insufficient evidence for listing chloral on EPCRA section 313 based on the available toxicity data for this chemical.

Aquatic toxicity test data for chloral indicate a measured 48–hour LC_{50} of 1,720 ppm for the golden orfe. The estimated acute aquatic toxicity value, using QSAR analysis based on the equation for aldehydes and a log P of 1.66, is approximately 12 ppm for fish, daphnid, and algae (Refs. 39 and 45). Because the measured and estimated aquatic acute toxicity values for chloral are greater than 1 ppm and the bioaccumulation potential is limited, based on the low log P value, there is insufficient evidence for listing chloral on EPCRA section 313 based on available ecotoxicity information for this chemical.

3. *2-Chloroethyl vinyl ether* (CAS No. 00110–75–8). Only limited data could be located regarding the acute toxicity of 2-chloroethyl vinyl ether. The oral LD_{50} for the rat is 250 mg/kg (Ref. 37). No subchronic or chronic toxicity could be located. Therefore, there is insufficient evidence for including 2-chloroethyl vinyl ether on EPCRA section 313 based on the available toxicity data for this chemical.

The measured aquatic toxicity test value for the bluegill 96–hour LC_{50} is 350 ppm. Estimated aquatic toxicity values using the QSAR equation for neutral organics and log P of 0.99 are 703 ppm for fish 96–hour LC_{50}, 702 ppm for daphnid 48–hour EC_{50}, and 415 ppm for algae 96–hour EC_{50} (Refs. 3 and 45). Because these aquatic toxicity values for 2-chloroethyl vinyl ether are greater than 1 ppm, there is insufficient evidence for listing 2-chloroethyl vinyl ether on EPCRA section 313 based on available ecotoxicity information for this chemical.

4. *b-Chloronaphthalene* (CAS No. 00091–58–7). Dyspnea, abnormal appearance, and liver enlargement were observed in mice administered β-chloronaphthalene by gavage for 13 weeks. A LOAEL and NOAEL of 600 mg/kg/day and 250 mg/kg/day were determined, respectively. A supporting study also reported liver effects in rats injected with 80 mg/kg/day β-chloronaphthalene by the intraperitoneal route (Ref. 38). Chronic developmental and reproductive toxicity following oral exposure to β-chloronaphthalene have not been tested. As β-chloronaphthalene induced effects only at relatively high doses, there is insufficient evidence for listing this chemical on EPCRA section 313 based on the available toxicity data for this chemical.

Estimated aquatic acute toxicity test data (48–hour LC_{50}) for daphnids is 10.1 to 23 mm/m^3. Estimated aquatic toxicity values, based on QSAR analysis using the equation for neutral organics and a log P of 4.03, are between 1.3 and 1.8 ppm for fish, daphnid, and algae (Refs. 3 and 45). Because β-chloronaphthalene has estimated aquatic acute toxicity values slightly greater than 1 ppm and its bioaccumulation potential is limited, based on a log P value of less than 5.5, there is insufficient evidence for listing β-chloronaphthalene on EPCRA section 313 based on available ecotoxicity information for this chemical.

5. *Ethyl methacrylate* (CAS No. 00097–63–2). Ethyl methacrylate causes irritation and CNS effects in humans (no dose levels available). In dogs, ethyl methacrylate administered intravenously increased respiratory rate, decreased heart rate, produced electrocardiographic changes, and caused a biphasic response in blood pressure (Ref. 37); dose levels were not given. There is no carcinogenicity data on ethyl methacrylate. An NTP bioassay on methyl methacrylate, a close analogue, showed no evidence for carcinogenicity in rats and mice (Ref. 34). Therefore, there is insufficient evidence for including ethyl methacrylate on EPCRA section 313 based on the available toxicity data for this chemical and for its analogue, methyl methacrylate.

6. *Isobutyl alcohol* (CAS No. 00078–83–1). Isobutyl alcohol is listed at 40 CFR 261.33(f) for ignitability and toxicity. In rats, isobutyl alcohol induced hypoactivity and ataxia following oral exposure, resulting in a NOAEL of 316 mg/kg/day and a LOAEL of 1,000 mg/kg/day (Ref. 38). As isobutyl alcohol induced effects only at relatively high doses, there is insufficient evidence for listing isobutyl alcohol on EPCRA section 313 based upon the available neurotoxicity data for this chemical.

Aquatic toxicity test data for isobutyl alcohol indicate that measured acute values for fish 96–hour LC_{50} range from 1,330 to 1,600 ppm whereas the 48–hour LC_{50} values for daphnids range from 1,060 to 1,350 ppm. Estimated aquatic toxicity values, based on QSAR analysis using the equation for neutral organics and a log P of 0.69, are 916 ppm and 935 ppm for the fish 96–hour and daphnid 48–hour LC_{50}, respectively, and 531.1 ppm for the algae 96–hour EC_{50} (Refs. 3 and 45). Based on aquatic toxicity values for isobutyl alcohol that are consistently greater than 100 ppm and a very low log P value, there is insufficient evidence for listing isobutyl alcohol on EPCRA section 313 based on available ecotoxicity information for this chemical.

7. *Maleic hydrazide* (CAS No. 00123–33–1). In rats, the monoethanolamine salt of maleic hydrazide (1,2-dihydro-3,6-pyridazinedione) induced maternal and fetal toxicity, and teratogenicity following dietary exposure in pregnant rats during gestation, resulting in a LOAEL of 3,000 mg/kg/day and a NOAEL of 1,500 mg/kg/day. Effects noted were increased resorptions, decreased mean fetal weight, and increased postimplantation loss. When exposure was continued through the lactation period, there was a delay in the pups' startle response. In pregnant rabbits, oral administration of potassium salt of maleic hydrazide induced fetal toxicity (malformed scapulae), resulting in a NOAEL of 100 mg/kg/day and a lowest-adverse-effect level (LOAEL) of 300 mg/kg/day (Ref. 28). As maleic hydrazide induced effects only at relatively high doses, there is insufficient evidence for listing maleic hydrazide on EPCRA section 313 based on the available developmental toxicity data for this chemical. Additional toxicity data are available from EPA/OPP's One-Liner data base, however, this is CBI under FIFRA.

8. *Methapyrilene* (CAS No. 00091–80–5). There are some cancer data that suggest that methapyrilene induces liver tumors in rats by intubation and dietary exposures (Refs. 37 and 44). However, the available carcinogenicity data are insufficient for listing methapyrilene on EPCRA section 313.

In humans, methapyrilene induces anticholinergic toxicity, hallucinations, delirium and confusion. Methapyrilene produces toxic psychosis which is temporary and benign. There are several reports of fatality due to oral exposures. The human data are generally taken from reports of overdoses and the exposure levels are not known. In dogs, intravenous injection of 40 mg/kg (only dose level administered) methapyrilene induced anticholinergic effects (Refs. 37 and 49). NOAEL and LOAEL values cannot be derived from the available data for methapyrilene. Therefore, there is insufficient evidence for listing methapyrilene on EPCRA section 313 based upon the available neurotoxicity data for this chemical.

9. *Methyl ethyl ketone peroxide* (CAS No. 01338–23–4). Methyl ethyl ketone peroxide is listed at 40 CFR 261.33(f) based on reactivity and toxicity. Methyl ethyl ketone peroxide is currently under short-term test by NTP for sub-chronic

toxicity. No chronic systemic, teratogenicity, or reproductive studies could be located in the available literature for methyl ethyl ketone peroxide. The inhalation LC_{50} values for rats and mice are 200 ppm (1.4 mg/L) and 170 ppm (1.2 mg/L) methyl ethyl ketone peroxide, respectively. The oral LD_{50} for rats is 484 mg/kg (Ref. 37). Therefore, there is insufficient evidence for listing methyl ethyl ketone peroxide on EPCRA section 313 based on the available toxicity data for this chemical.

10. *1,4-Naphthoquinone* (CAS No. 00130–15–4). In humans, 1,4-naphthoquinone decreases the number of erythrocytes and sulfhydryl compounds and hemoglobin levels in the blood. The compound also depresses the phagocytic activity of leukocytes and induces methemoglobin and heinz bodies formation in the blood. It was not reported whether these effects were noted *in vitro* and no exposure levels were reported for these effects. In rats, methemoglobin and heinz body formation, hemolytic anemia, and decreased total respiration were induced following acute (0.5 g/kg) and subchronic (0.3 g/kg) exposure to 1,4-naphthoquinone. The route of exposure was not reported. The oral LD_{50} values for rats and guinea pigs are 190 mg/kg and 400 mg/kg 1,4-naphthoquinone, respectively (Refs. 37 and 46). Therefore, there is insufficient evidence for listing 1,4-naphthoquinone on EPCRA section 313 based on the available toxicity data for this chemical.

The estimated aquatic toxicity values for 1,4-naphthoquinone, based on QSAR analysis using the equation for neutral organics and a log P of 1.12, are 788 ppm for the fish 96–hour LC_{50}, 794 ppm for the daphnid 48–hour LC_{50}, and 472 ppm for the algae 96–hour EC_{50} (Ref. 42). The aquatic acute toxicity values for 1,4-naphthoquinone are consistently greater than 100 ppm and the log P value is less than 5.5. 1,4-Naphthoquinone has moderate volatility and low solubility and is expected to biodegrade in soil (the half-life is 1.2 days) or water. Based on these aquatic toxicity, bioaccumulation, and persistence values, there is insufficient evidence for listing 1,4-naphthoquinone on EPCRA section 313 based on available ecotoxicity information for this chemical.

11. *n-Propylamine* (CAS No. 00107–10–8). n-Propylamine is listed at 40 CFR 261.33(f) for ignitability and toxicity. In studies conducted on rats, mice, rabbits, and guinea pigs, n-propylamine induced CNS excitation followed by inhibition after exposure by the inhalation or oral routes (Ref. 37). Details of the study, including effective doses, were not reported. Therefore, there is insufficient evidence for listing n-propylamine on EPCRA section 313 based on available neurotoxicity data for this chemical.

The measured aquatic toxicity test data for n-propylamine include a fathead minnow 96–hour LC_{50} value of 308 ppm. Estimated aquatic toxicity values, based on QSAR analysis using the equation for aliphatic amines and a log P of 0.39, are 175 ppm for the fish 96–hour LC_{50}, 10.5 ppm for the daphnid 48–hour LC_{50}, and 11.3 for the algae 96–hour EC_{50} (Refs. 3 and 45). Because the measured and estimated acute aquatic toxicity values for n-propylamine are consistently greater than 1 ppm and the log P value is less than 5.5, there is insufficient evidence for listing n-propylamine on EPCRA section 313 based on available ecotoxicity information for this chemical.

12. *Resorcinol* (CAS No. 00108–46–3). Resorcinol is classified as a Group 3 carcinogen by IARC; i.e., the compound is not classifiable as to its carcinogenicity in humans. There is inadequate evidence of carcinogenicity in animals, and no data are available in humans (Ref. 37). There was no evidence of carcinogenicity in mice and rats in NTP studies. Therefore, there is insufficient evidence for listing resorcinol on EPCRA section 313 based on the available carcinogenicity data for this chemical.

In rats, no maternal toxicity or fetotoxicity was observed following oral exposure to resorcinol (12.5 to 500 mg/kg) (Ref.37). Therefore, there is insufficient evidence for listing resorcinol on EPCRA section 313 based on the available developmental toxicity data for this chemical.

The measured aquatic toxicity test data for resorcinol range from 40 to greater than 100 ppm for the fish 96–hour LC_{50} and 900 ppb for the daphnid 96–hour LC_{50}. The estimated aquatic toxicity value for the fish 96–hour LC_{50}, based on QSAR analysis using the equation for substituted phenols and a log P of 0.81, is 84.7 ppm (Refs. 3 and 45). Because the estimated aquatic acute toxicity value for resorcinol is greater than 1 ppm and the log P value is considerably less than 5.5, there is insufficient evidence for listing resorcinol on EPCRA section 313 based on available ecotoxicity information for this chemical.

V. Rationale for Listing

EPA is proposing to add the chemical substances identified in Unit IV.B of this preamble because these chemicals meet the statutory criteria for listing under section 313(d)(2) of EPCRA. These determinations and the specific toxic effects are set forth in Unit IV.B of this preamble and in the rulemaking record.

VI. Alternative Proposal: Manufacturing Volume Threshold

A. Manufacturing Volume Threshold for Additions to the Section 313 List

Alternatively, EPA is proposing to add to the EPCRA section 313 list only those chemicals and chemical categories which are identified above in Unit IV.B which are manufactured, imported or processed (per facility) in quantities greater than an annual manufacturing volume threshold to be set by EPA. The selection of this manufacturing volume threshold would be guided by the EPCRA section 313 (f) reporting thresholds [The EPCRA section 313 manufacture (includes import) and process thresholds are 25,000 pounds per year per facility]. EPA anticipates that the addition of those chemicals manufactured, imported, or processed in quantities less than the manufacturing volume threshold would not be expected to result in the submission of Form R reports.

The Agency is specifically considering two different manufacturing volume thresholds for determining which chemicals of the petitioned chemicals would *not* be added to the section 313 list. EPA is seriously considering an annual per facility manufacturing volume threshold of 25,000 pounds, which is the EPCRA section 313(f)(1)(B) manufacturing threshold for section 313 reporting. The Agency does not believe that the addition of chemicals to the EPCRA section 313 list of toxic chemicals that are either not manufactured, imported, or processed or are manufactured, imported, or processed in quantities less than 25,000 pounds would provide a benefit to the public. If these chemicals were added to the EPCRA section 313 list, it is unlikely that any EPCRA section 313 Form R reports would be submitted. EPA recognizes, however, that it is possible that some chemicals may be manufactured, imported, or processed per facility annually in quantities less than 25,000 pounds, yet may be used by one or more facilities in excess of 10,000 pounds annually, thus subjecting those facilities to the section 313(f)(1)(A) use-triggered reporting requirements. Therefore, EPA is also considering a manufacturing volume threshold of 10,000 pounds per facility. EPA specifically requests comment on which manufacturing volume threshold should be used in making determinations to add

or not add petitioned chemicals to the EPCRA section 313 list.

When addressing petitions of this type, EPA believes that it is important to focus on those toxic chemicals that will yield data for the public. As such, EPA strongly believes that the use of a manufacturing volume threshold in responding to petitions submitted under section 313(e) is appropriate and within the authority granted by EPCRA. Section 313(e)(2) requires EPA, in responding to a petition submitted by a State Governor, to either add the petitioned chemical(s) to the section 313 list in accordance with section 313(d)(2) or to publish an explanation of why the Administrator believes the chemical(s) does not meet the requirements of section 313(d)(2). Section 313(d)(2) provides that "[a] chemical may be added if the Administrator determines, in his judgment, that there is sufficient evidence to establish any one [of the listed criteria]." EPA does not interpret section 313(d)(2) to *mandate* the addition of any chemical to the section 313 list, but, rather, gives the Agency discretion to do so ("A chemical *may* be added if the Administrator determines ..." emphasis added.), provided any one of the listed criteria are satisfied. In this instance, EPA's use of a manufacturing volume threshold is consistent with the section 313 list's purpose of generation of publicly available release data on listed chemicals and therefore a valid exercise of the Agency's discretion.

In addition to production volume considerations, EPA is interested in receiving comment on other criteria, such as risk, that would be consistent with the statute that can be used to determine which chemicals should be added to the EPCRA section 313 list.

B. Annual Manufacturing Volume

EPA used a 25,000 pound annual per facility manufacturing volume threshold as a benchmark in researching chemical marketing data in an effort to identify those chemicals which would be subject to the 25,000 pound per facility manufacturing volume threshold option described above. Thus, the largest potential group of petitioned chemicals which would be affected by the annual production volume threshold could be identified. EPA recognizes that the additions to the EPCRA section 313 list may be greater if a manufacturing volume threshold of 10,000 pounds per facility is chosen.

Information regarding production and use for each of the chemicals which were determined to meet the listing criteria under EPCRA section 313(d)(2) is contained in the support document *Economic Analysis of the Proposed Addition of 70 Chemicals to the EPCRA Section 313 List of Toxic Chemicals* (Ref. 2). For each chemical considered, both publicly-available and confidential information sources, i.e., Toxic Substance Control Act (TSCA) section 14 confidential business information (CBI), were reviewed in search of evidence of that chemical's recent manufacture, importation, or use. Information on the number of sites at which the chemical was likely to be found was also sought.

For most chemicals, information was available to allow EPA to make a determination that a particular chemical was either manufactured for commercial distribution (manufactured, imported, or processed in excess of 25,000 pounds, annually) or manufactured, imported, or processed in limited volumes. In cases where commercial distribution was indicated, reliable market data disclosed annual manufacture or importation in exceedence of 25,000 pounds, as well as the number of sites where the chemical was likely to be found. For the purposes of preparing the Economic Analysis (Ref. 2), where TSCA section 14 CBI was the only reliable source of evidence of a chemical's manufacture/importation, data retrieved from the data base were aggregated so as to prevent disclosure. In other cases, the manufacture/importation of a chemical was indicated, but only in relatively small amounts (typically for research purposes). Also, some chemicals were suspected as functioning only as intermediates, and no reliable data were available regarding manufacture/importation.

For approximately 33 percent of the chemicals considered, no evidence could be found of manufacture, importation, or use, commercial or otherwise. EPA's preliminary finding is that such chemicals are not manufactured, processed, or imported, and no reporting activities would be anticipated to result were they added to the section 313 list at this time.

EPA's analysis indicates that a subset of the 68 chemicals and 2 chemical categories proposed for addition to EPCRA section 313 consists of chemicals that are either (1) manufactured, imported, or processed in annual quantities greater than 25,000 pounds, and can be listed below without possibly revealing TSCA section 14 CBI or (2) those for which a determination and public disclosure of the chemicals annual manufacturing volume could not be made without possibly disclosing CBI in violation of TSCA section 14. For chemicals in the latter group, TSCA section 14 CBI may indicate annual production beneath the 25,000 pound threshold for each facility. However, EPA may not use TSCA section 14 CBI information to identify the manufacturing and/or import volume of a chemical if doing so would reveal CBI.

Should manufacturers of any chemicals appearing on the following list believe CBI would demonstrate that it's facility manufactures, imports, or processes the chemical below the 25,000 pound annual level, the company may waive its claim to CBI protection. CBI waivers would allow EPA to disclose, for the purpose of applying the proposed manufacturing volume threshold option, that such a chemical is manufactured, imported, or processed in a quantity of less than 25,000 pounds annually. However, EPA would need to receive waivers from all manufacturers, importers, and processors of a given chemical before using TSCA section 14 CBI information, if doing so would disclose CBI in violation of TSCA section 14. Companies should note that they may limit any TSCA section 14 CBI waiver to EPA's use of such information for purposes of today's proposed manufacturing volume threshold option. In addition, companies may make any CBI waiver conditional on EPA taking final action on this proposal and not listing a specific chemical on the EPCRA section 313 list, pursuant to the proposed manufacturing volume option. Alternatively, manufacturers are encouraged to submit to the Agency any publicly available information which would support a finding that a chemical is manufactured, imported, or processed in quantities less than 25,000 pounds. TSCA section 14 CBI waivers should be submitted by [Insert date 60 days after date of publication in the **Federal Register**] to: TSCA Document Receipt Office (TS–790), Office of Pollution Prevention and Toxics, Environmental Protection Agency, Rm. ET–005, 401 M St., SW., Washington, DC 20460. Comments should include the docket control number "OPPTS–400069."

The following chemicals are manufactured, imported, or processed in quantities greater than 25,000 pounds per facility per year:

Acetophenone (00098-86-2)
Amitrole (00061-82-5)
p-Chloro-m-cresol (00059-50-7)
Bis(2-chloroethoxy)methane (00111-91-1)
Crotonaldehyde (04170-30-3)
1,4-Dichloro-2-butene (00764-41-0)
Dihydrosafrole (00094-58-6)
Ethylenebisdithiocarbamic acid, salts and esters (NA)
Ethylidene dichloride (00075-34-3)
Formic acid (00064-18-6)
Hydrogen sulfide (07783-06-4)
Malononitrile (00109-77-3)
Methacrylonitrile (00126-98-7)
Methyl chlorocarbonate (00079-22-1)

Methyl mercaptan (00074-93-1)
2-Methylpyridine (00109-06-8)
5-Nitro-o-toluidine (00099-55-8)
Pentachloroethane (00076-01-7)
Pronamide (23950-58-5)
1,1,1,2-Tetrachloroethane (00630-20-6)
Thiram (00137-26-8)
p-Toluidine (00106-49-0)

The following chemicals are manufactured, imported, or processed in quantities less than 25,000 pounds:

Benz[a]anthracene (00056-55-3)
Benzo[a]phenanthrene (00218-01-9)
Benzo[a]pyrene (00050-32-8)
4-Bromophenyl phenyl ether (00101-55-3)
Carbonic difluoride (00353-50-4)
Chlorambucil (00305-03-3)
Cyclophosphamide (00050-18-0)
Dibenzo(a,h)anthracene (00053-70-3)
1,2-Diethylhydrazine (01615-80-1)
Diethylstilbestrol (00056-53-1)
Fluoranthene (00206-44-0)
Glycidylaldehyde (00765-34-4)
Hexachlorophene (00070-30-4)
Hexachloropropene (01888-71-7)
Indeno[1,2,3-cd]pyrene (00193-39-5)
Melphalan (00148-82-3)
N-Nitrosopyrrolidine (00930-55-2)
Paraldehyde (00123-63-7)
Pentachlorobenzene (00608-93-5)
Reserpine (00050-55-5)
Streptozotocin (18883-66-4)
Trypan blue (00072-57-1)
Uracil mustard (00066-75-1)
Warfarin and salts (NA)

No information could be located that indicate that the following chemicals are manufactured, imported, or processed:

Azaserine (00115-02-6)
Benz[c]acridine (00225-51-4)
Benzo[rst]pentaphene (00189-55-9)
Chlornaphazine (00494-03-1)
4-Chloro-o-toluidine hydrochloride (03165-93-3)
Daunomycin (20830-81-3)
DDD (00072-54-8)
DDT (00050-29-3)
O,O-Diethyl-S-methyl dithiophosphate (03288-58-2)
7,12-Dimethylbenz[a]anthracene (00057-97-6)
1,2-Dimethylhydrazine (00540-73-8)
Ethyl methanesulfonate (00062-50-0)
Kepone (00143-50-0)
Lasiocarpine (00303-34-4)
3-Methylcholanthrene (00056-49-5)
Methylthiouracil (00056-04-2)
MNNG (N-methyl-N'-nitro-N-nitrosoguanidine) (00070-25-7)
Mitomycin C (00050-07-7)
N-Nitrosodiethanolamine (01116-54-7)
N-Nitroso-N-methylurethane (00615-53-2)
Phenacetin (00062-44-2)
1,2,4,5-Tetrachlorobenzene (00095-94-3)
2,4,5-TP (Silvex) (00093-72-1)
1,3,5-Trinitrobenzene (00099-35-4)

Nine of the chemicals listed above (benz[c]acridine, benz[a]anthracene, benzo[rst]pentaphene, benzo[a]phenanthrene, benzo[a]pyrene, dibenzo(a,h)anthracene, 7,12-dimethylbenz[a]anthracene, fluoranthene, and indeno[1,2,3-cd]pyrene) which either have manufacturing volumes less than 25,000 pounds or for which no information could be located on their production are components of coke oven emissions known as polycyclic organic compounds. Since these chemicals are generated primarily in coke ovens, it is not likely that individually any would exceed the 25,000 pound per facility manufacturing threshold. However, as a category these chemicals are expected to collectively exceed the 25,000 pound per facility manufacturing threshold.

EPA requests comment on public sources of annual manufacturing information, other than those used in the economic support document (Ref. 2), that could be used by the Agency to determine the production volume of those chemicals listed in Unit IV.B of this preamble.

VII. Proposed TSCA Section 5(a)(2) Significant New Use Rule

A. Statutory Authority

This proposal is issued under section 5(a)(2) of the Toxic Substances Control Act (TSCA), 15 U.S.C. 2604(a)(2).

B. TSCA Section 5(a)(2) SNUR

EPA recognizes that there may be future production in excess of the annual manufacturing volume threshold of any of the chemicals that based on the manufacturing volume threshold option are not added to the section 313 list. If EPA elects to adopt the manufacturing volume threshold option in a final rule, the Agency intends to promulgate a significant new use rule (SNUR) under TSCA section 5(a)(2) that would cover the substances manufactured, imported, or processed in amounts less than the manufacturing volume threshold specified in that rule (i.e., 25,000 or 10,000 pounds per year). For the purposes of this proposed SNUR, however, a manufacturing threshold of 25,000 pounds is used. The SNUR would require persons to submit a significant new use notice to EPA at least 90 days before manufacturing, importing, or processing any of the following chemical substances or chemical category, in amounts of 25,000 pounds or greater, per year, per facility, for any use:

CAS No.	Name
101-55-3	4-Bromophenyl phenyl ether
353-50-4	Carbon oxyfluoride (Carbonic difluoride)
50-29-3	DDT
56-53-1	Diethylstilbestrol
62-50-0	Ethyl methanesulfonate
70-30-4	Hexachlorophene

—Continued

CAS No.	Name
1888-71-7	Hexachloropropene
56-49-5	3-Methylcholanthrene
56-04-2	Methylthiouracil
70-25-7	MNNG (N-methyl-N'-nitro-N-nitrosoguanidine)
50-07-7	Mitomycin C
1116-54-7	N-Nitrosodiethanolamine
615-53-2	N-Nitroso-N-methylurethane
930-55-2	N-Nitrosopyrrolidine
123-63-7	Paraldehyde
608-93-5	Pentachlorobenzene
62-44-2	Phenacetin
50-55-5	Reserpine
95-94-3	1,2,4,5-Tetrachlorobenzene
99-35-4	1,3,5-Trinitrobenzene
72-57-1	Trypan blue
N/A	Warfarin and salts

For the category warfarin and salts, reporting under the SNUR would be triggered, for example, by the manufacture of 20,000 pounds of warfarin and 5,000 pounds of a warfarin salt at a given facility in any calendar year, for any use (or any combination of uses). However, the SNUR reporting thresholds would be determined separately for manufacturing, importing, and processing activities.

The chemical substances and chemical category which are included in this alternative are those that EPA believes are currently being manufactured, imported, or processed in amounts of less than 25,000 pounds per year per facility and that appear on the TSCA Inventory (the Inventory is a list of existing chemical substances compiled by EPA under TSCA section 8(b)). Accordingly, some substances identified in the EPCRA section 313 petition that appear to be in production in amounts less than 25,000 pounds per year per facility may be excluded from coverage under TSCA section 3(2)(B) because of their uses (e.g., as a pesticide under the Federal Insecticide, Fungicide, and Rodenticide Act (7 U.S.C. section 136, et seq.)). EPA discusses possible means of tracking production for those substances in Unit VII.D. below.

C. SNUR Statutory and Regulatory Background

Section 5(a)(2) of TSCA (15 U.S.C. 2604(a)(2)) authorizes EPA to determine that a use of a chemical substance is a "significant new use." The Agency must make this determination by rule after considering all relevant factors, including those listed in TSCA section 5(a)(2). These factors include the volume of a chemical substance's production, the extent to which a use changes, the type, form, magnitude, or duration of exposure to it, and the reasonably anticipated manner of producing or

otherwise managing the substance. Once EPA determines that a use of a chemical substance is a significant new use, section 5(a)(1)(B) of TSCA requires persons to submit a notice to EPA at least 90 days before they manufacture, import, or process the chemical substance for that use.

Persons subject to a SNUR must comply with the same notice requirements and EPA regulatory procedures as submitters of premanufacture notices (PMNs) under section 5(a)(1)(A) of TSCA. In particular, these requirements include the information submission requirements of TSCA section 5(b) and (d)(1), the exemptions authorized by TSCA sections 5(h)(1), (2), (3), and (5), and the regulations at 40 CFR part 720. General regulatory provisions applicable to SNURs are codified at 40 CFR part 721, subpart A. EPA may take regulatory action under sections 5(e), 5(f), 6, or 7 of TSCA to control the activities for which it has received a SNUR notice. If EPA does not take action, section 5(g) of TSCA requires EPA to explain in the **Federal Register** its reasons for not taking action.

Persons who intend to export a chemical substance identified in a proposed or final SNUR are subject to the export notification provisions of TSCA section 12(b). The regulations that interpret section 12(b) appear at 40 CFR part 707. The export notification requirements of 40 CFR part 707 are triggered by this action. Should EPA determine it to be inappropriate to finalize the SNUR, the proposal will be withdrawn. In addition, should EPA select an annual manufacturing volume threshold lower than 25,000 pounds in a final rule (i.e., 10,000 pounds), the export notification would cease to apply to those chemicals in today's proposed SNUR which are not subject to a final SNUR.

D. Objectives and Rationale for the SNUR Alternative

To determine what would constitute a significant new use of the chemical substances and chemical category that are the subjects of this proposal, EPA considered relevant information on the toxicity of the chemical substances, likely exposures associated with possible uses, and the relevant factors listed in section 5(a)(2) of TSCA. Based on these considerations, EPA intends to achieve the following objectives with regard to the significant new use that is presented in this alternative. EPA would want to ensure that:

a. The Agency would receive notice of any company's intent to manufacture, import, or process per calendar year, per facility, for any use, the chemicals and chemical category listed under this alternative in amounts greater than the annual manufacturing volume threshold as discussed in Unit VI.A.

b. The Agency would have prospective manufacturing, importing, and processing data available from the significant new use notice that would allow it to make informed decisions regarding any possible listing under section 313 of EPCRA of the chemicals and chemical category listed in this alternative.

c. The Agency would have an opportunity to review and evaluate data submitted in a significant new use notice before the notice submitter begins manufacture, importation, or processing for a significant new use.

d. The Agency would be able to regulate prospective manufacturers, importers, or processors of the chemicals and chemical category listed in this alterative before a significant new use occurs, provided that the degree of potential health and/or environmental risk, or the uncertainty about the risks, is sufficient to warrant such regulation.

As discussed in Unit IV.B, EPA has concerns regarding the toxicity of the chemical substances and chemical category that would be included in the SNUR. Indeed EPA has proposed today to add each of these chemicals to the EPCRA section 313 list. EPA believes exposures to the substances listed in this proposal associated with manufacture, import, processing, use, and associated activities could increase should manufacture, import, or processing volumes equal or exceed an established manufacturing volume threshold (i.e., 25,000 or 10,000 pounds, per year, per facility). The notice that would be required by the SNUR would provide EPA with the opportunity to evaluate activities associated with the significant new use, and an opportunity to protect against unreasonable risks, if any, from exposure to the chemical substances which could result from the proposed significant new use.

Additionally, the information submitted with a SNUR notice could be used by EPA to consider initiating a rulemaking under EPCRA section 313 to list the chemical substance or chemical category that was the subject of the significant new use notice, if appropriate.

E. Other Means of Tracking of Future Production

Should EPA adopt the alternative proposal as a final rule, the Agency would have available in addition to a TSCA SNUR, several existing regulatory mechanisms for tracking production of the unlisted chemicals, to determine if any exceed the annual manufacturing volume threshold in future years such that EPA could reasonably anticipate that section 313 release reports would be filed were the chemical on the section 313 list.

1. *FIFRA section 7 information.* As stated in Unit VII.B, many of the chemicals identified in this proposal are solely pesticides for which the TSCA SNUR mechanism would be inappropriate. Section 7 of FIFRA (7 U.S.C. section 136 *et seq.*), however, provides the Agency with annual production information on registered pesticides. EPA regulations implementing FIFRA section 7 (40 CFR part 167) require all manufacturers of pesticidal products (which includes pesticides, active ingredients, or devices) to submit an annual report detailing the amount of each type of pesticidal product manufactured, sold or distributed during the past year, and estimated to be manufactured, imported, or processed during the current year (40 CFR 167.85). Although information obtained from manufacturers under FIFRA section 7 is confidential, EPA may be able to use such information as an internal device for tracking the manufacturing volume of chemicals that would not be added to the EPCRA section 313 list under today's alternative proposal, without violating FIFRA's confidentiality provision. EPA requests comment on other sources of information for this purpose.

2. *Food, drug, and cosmetics information.* A number of the chemicals in today's proposed action are excluded from coverage under TSCA section 5 because they meet the definition of "food," "food additive," "drug," "cosmetic," or "device" under the Federal Food, Drug, and Cosmetic Act (see TSCA section 3(2)(B)(vi)), and therefore cannot be subject to a SNUR. EPA requests comment on sources of annual manufacturing information on such chemicals which could be used by the Agency to track manufacturing volumes.

VIII. Rulemaking Record

The record supporting this proposed rule is contained in the docket number OPTS–400069. All documents, including an index of the docket, are available in the TSCA Public Docket Office from 8 a.m. to noon and 1 p.m. to 4 p.m., Monday through Friday, excluding legal holidays. The TSCA Public Docket Office is located at EPA Headquarters, Rm. NE–G004, 401 M St., SW., Washington, DC 20460.

IX. Request for Public Comment

EPA welcomes comment on any aspect of today's **Federal Register** Notice. EPA requests specific comment as detailed in the following paragraphs.

EPA requests public comment on this proposal to add 68 chemicals and 2 chemical categories to the list of chemicals subject to EPCRA section 313. EPA carried out a limited hazard assesment and thus is specifically requesting toxicity information on those chemicals in Unit IV.B of this preamble that have been identified as "may be sufficient for listing" and on the chemicals listed above in Unit IV.C of this preamble.

EPA requests comment on the use of a manufacturing volume threshold to preclude the addition of chemicals to the EPCRA section 313 list, as described in Unit VI. In addition, EPA solicits comment on what manufacturing volume threshold (e.g., 25,000 or 10,000 pounds per year per facility) would be appropriate for making this determination.

EPA requests comment on whether the following nine polycyclic organic compounds should be listed as a category rather than individually: benz[c]acridine, benz[a]anthracene, benzo[rst]pentaphene, benzo[a]phenanthrene, benzo[a]pyrene, dibenzo(a,h)anthracene, 7,12-dimethylbenz[a]anthracene, fluoranthene, and indeno[1,2,3-cd]pyrene. Because these chemicals are generated in coke ovens, it is not likely they would individually trigger the manufacturing threshold at any given facility. However, if listed as a category it is expected that such coincidental manufacture would exceed the 25,000 pound manufacturing threshold.

EPA is aware that the information used to determine if a chemical is manufactured, imported, or processed in quantities greater than an established manufacturing volume threshold (e.g., 25,000 or 10,000 pounds) is limited. Thus, the Agency specifically requests any information on the production volume of those chemicals listed in Unit IV.B of this preamble.

EPA also requests comment on the suitability of using a TSCA SNUR as a mechanism for the Agency to use in tracking the future production of those chemicals listed in Unit IV.B of this preamble that are manufactured in quantities less than the threshold discussed in Unit VI.B of this preamble. EPA notes that a SNUR will capture only those chemicals subject to TSCA. Production information on chemicals that are used as pesticides, drugs, or cosmetics will not be captured by a SNUR. EPA requests comment on the use of other regulatory mechanisms for obtaining production volume information.

EPA requests comment on public sources of annual manufacturing information, other than those used in the economic support document (Ref. 2), that could be used by the Agency to determine the production volume of those chemicals listed in Unit IV.B of this preamble.

This petition does not request that any action be taken under RCRA, and today's proposal should not be inferred as a proposed RCRA action or a request for comment on the list of hazardous wastes.

Comments should be submitted to the address listed under the ADDRESSES unit at the front of this document. All comments must be submitted on or before November 9, 1992.

X. References

(1) Allied Chemical Corp. 1978. Letter to U.S. EPA submitting a medical review of an incident that occurred in one of the plants involving the exposure of methyl mercaptan, dimethyl disulfide, and acetonitrile with attachment. U.S. EPA/OTS Public Files, Document No. 8EHQ-0578-0149.

(2) Andrei, R. 1992. Economic Analysis of the Proposed Addition of 70 Chemicals to the EPCRA Section 313 List of Toxic Chemicals.

(3) AQUIRE. 1992. Aquatic Information Retrieval. Baltimore, MD: Chemical Information System.

(4) ATSDR. 1989. Toxicological Profile for DDE, DDT, DDD. U.S. Department of Health and Human Services, Public Health Service, Agency for Toxic Substances and Disease Registry, Atlanta, GA.

(5) ATSDR. 1989. Toxicological Profile for 1,1-Dichloroethene. U.S. Department of Health and Human Services, Public Health Service, Agency for Toxic Substances and Disease Registry, Atlanta, GA.

(6) ATSDR. 1992. Toxicological Profile for Methyl Mercaptan. U.S. Department of Health and Human Services, Public Health Service, Agency for Toxic Substances and Disease Registry, Atlanta, GA.

(7) Browning, E. 1965. Toxicity and Metabolism of Industrial Solvents. New York, NY: American Elsevier, 261-263.

(8) EPA. 1977. Notice of Rebuttable Presumption Against Registration and Continued Registration of Pesticide Products Containing Ethylenebisdithiocarbamates. U.S. Environmental Protection Agency: Part III. (42 FR 40618; August 10, 1977).

(9) EPA. 1977. Notice of Rebuttable Presumption Against Registration and Continued Registration of Pesticide Products Containing Pronamide. U.S. Environmental Protection Agency: Part III. (42 FR 25906; May 20, 1977).

(10) EPA. 1979. Position Document 2/3: Pronamide. U.S. Environmental Protection Agency, Washington, DC. EPA/SPRD-80/68, PB 80-213911, 80.

(11) EPA. 1979. Position Documents 1, 2 and 3: Preliminary Determination Concerning a Rebuttal Presumption Against Registration of Pesticide Products Containing Silvex. U.S. Environmental Protection Agency, Washington, DC. NTIS PB 80-213.

(12) EPA. 1982. Chemical Hazard Information Profile: 2-Methylpyridine, Draft Report. U.S. Environmental Protection Agency, Office of Toxic Substances, Washington, DC.

(13) EPA. 1984. Health and Environmental Effects Profile for Toluidines. U.S. Environmental Protection Agency, Environmental Criteria and Assessment Office, Cincinnati, OH. ECAO-CIN-P044.

(14) EPA. 1984. Health Effects Assessment for Benzo(a)pyrene. U.S. Environmental Protection Agency, Environmental Criteria and Assessment Office, Cincinnati, OH. EPA/540/1-86-022.

(15) EPA. 1986. Risk Assessment for 1,4-Dichloro-2-butene. Prepared by U.S. Environmental Protection Agency, Office of Toxic Substances, Risk Analysis Branch, Washington, DC.

(16) EPA. 1988. Addendum to Evaluation of the Potential Carcinogenicity of Azaserine. Prepared in support of Reportable Quantity Adjustment Pursuant to CERCLA Section 102. U.S. Environmental Protection Agency, Office of Solid Waste and Emergency Response, Washington, DC.

(17) EPA. 1988. Addendum to Evaluation of the Potential Carcinogenicity of Benzamine, 4-Chloro-2-Methyl-, Hydrochloro. Prepared in support of Reportable Quantity Adjustment Pursuant to CERCLA Section 102. U.S. Environmental Protection Agency, Office of Solid Waste and Emergency Response, Washington, DC.

(18) EPA. 1988. Addendum to Evaluation of the Potential Carcinogenicity of Chlorambucil. Prepared in support of Reportable Quantity Adjustment Pursuant to CERCLA Section 102. U.S. Environmental Protection Agency, Office of Solid Waste and Emergency Response, Washington, DC.

(19) EPA. 1988. Addendum to Evaluation of the Potential Carcinogenicity of Cyclophosphamide. Prepared in support of Reportable Quantity Adjustment Pursuant to CERCLA Section 102. U.S. Environmental Protection Agency, Office of Solid Waste and Emergency Response, Washington, DC.

(20) EPA. 1988. Addendum to Evaluation of the Potential Carcinogenicity of 7,12-Dimethylbenz(a)anthracene. Prepared in support of Reportable Quantity Adjustment Pursuant to CERCLA Section 102. U.S. Environmental Protection Agency, Office of Solid Waste and Emergency Response, Washington, DC.

(21) EPA. 1988. Addendum to Evaluation of the Potential Carcinogenicity of 1,2-Dimethylhydrazine. Prepared in support of Reportable Quantity Adjustment Pursuant to CERCLA Section 102. U.S. Environmental Protection Agency, Office of Solid Waste and Emergency Response, Washington, DC.

(22) EPA. 1988. Addendum to Evaluation of the Potential Carcinogenicity of Ethyl Methanesulfonate. Prepared in support of Reportable Quantity Adjustment Pursuant to CERCLA Section 102. U.S. Environmental

Protection Agency, Office of Solid Waste and Emergency Response, Washington, DC.

(23) EPA. 1988. Addendum to Evaluation of the Potential Carcinogenicity of Guanidine, N-Methyl-N'-Nitro-N-Nitroso-. Prepared in support of Reportable Quantity Adjustment Pursuant to CERCLA Section 102. U.S. Environmental Protection Agency, Office of Solid Waste and Emergency Response, Washington, DC.

(24)EPA. 1988. Addendum to Evaluation of the Potential Carcinogenicity of Kepone. Prepared in support of Reportable Quantity Adjustment Pursuant to CERCLA Section 102. U.S. Environmental Protection Agency, Office of Solid Waste and Emergency Response, Washington, DC.

(25) EPA. 1988. Addendum to Evaluation of the Potential Carcinogenicity of Lasiocarpine. Prepared in support of Reportable Quantity Adjustment Pursuant to CERCLA Section 102. U.S. Environmental Protection Agency, Office of Solid Waste and Emergency Response, Washington, DC.

(26) EPA. 1988. Addendum to Evaluation of the Potential Carcinogenicity of Methylthiouracil. Prepared in support of Reportable Quantity Adjustment Pursuant to CERCLA Section 102. U.S. Environmental Protection Agency, Office of Solid Waste and Emergency Response, Washington, DC.

(27) EPA. 1988. Addendum to Evaluation of the Potential Carcinogenicity of N-Nitroso-N-Methylurethane. Prepared in support of Reportable Quantity Adjustment Pursuant to CERCLA Section 102. U.S. Environmental Protection Agency, Office of Solid Waste and Emergency Response, Washington, DC.

(28) EPA. 1988. Health Advisory: Maleic Hydrazide. U.S. Environmental Protection Agency, Office of Drinking Water, Washington, DC.

(29) EPA. 1988. Health Advisory: Pronamide. U.S. Environmental Protection Agency, Office of Drinking Water, Washington, DC.

(30) EPA. 1990. Suspended, Canceled, and Restricted Pesticides. U.S. Environmental Protection Agency, Office of Pesticides and Toxic Substances, Washington, DC.

(31) EPA. 1991. Memorandum from M. G. Zeeman, HERD, OPTS, USEPA to G. E. Timm, ECAD, OPTS, USEPA. Review of data submitted by Eastman Kodak Company to the United States Environmental Protection Agency under a testing consent order published in the **Federal Register** on Novemeber 9, 1989. U.S. Environmental Protection Agency, Office of Pesticides and Toxic Substances, Washington, DC.

(32) EPA. 1992. Draft Hazard Assessment Guidelines for Listing Chemicals on the Toxic Release Inventory. U.S. Environmental Protection Agency, Office of Toxic Substances, Washington, DC.

(33) EPA. 1992. Ethylenebisdithiocarbamate: Position Document 4. U.S. Environmental Protection Agency, Washington, DC.: Part III. **Federal Register** (57 FR 7484; March 2, 1992)

(34) EPA. 1992. Structure activity relationship analysis submitted by Dr. David Lai, U.S. Environmental Protection Agency, Health and Environmental Review Division, Oncology Branch, Washington, DC.

(35) EPA. 1992. Support Document. Response to the New York Governor's Petition for Addition of 82 RCRA Chemicals to the Toxic Release Inventory. Prepared for Chemical Review and Evaluation Branch, HERD, Office of Pollution Prevention and Toxics, U.S. Environmental Protection Agency, Washington, DC. June 15, 1992.

(36) Fogleman, R. W., Elsea, J. R., Paynter, O. E., Kundzins, W. 1955. Pesticide safety evaluation: Toxicity of trinitrobenzene-aniline complex, a rodent repellent. Agricultural and Food Chemistry. 3(11):939-939.

(37) HSDB. 1992. Hazardous Substances Data Bank. Bethesda, MD: National Institutes of Health, National Library of Medicine.

(38) IRIS. 1992. Integrated Risk Information System. U.S. Environmental Protection Agency, Washington, DC.

(39) ITC. 1989. Interagency Testing Committee. Information Review prepared by CRCS/Dynamac Corporation, Rockville, MD.

(40) Jarabek, A. 1992. Letter and Attachments to Nancy Pate of the Office of Air Quality Planning and Standards, U.S. EPA on Acetophenone.

(41) MSU. 1992. Quantitative Structure-Activity Relationships (QSAR) Analysis. Institute for Process Analysis. Montana State University.

(42) NPIRS. 1992. National Pesticide Information Retrieval System. NPIRS version of U.S. Environmental Protection Agency, Office of Pesticide Programs, Pesticide Document Management System, Washington, DC.

(43) NRC. 1977. Drinking Water and Health. National Research Council, Assembly of Life Sciences, Advisory Center on Toxicology, Safe Drinking Water Committee. Washington, DC.: National Academy of Sciences, 613-620.

(44) NTP. 1991. Chemical Status Report Produced from NTP Chemtrack System. National Toxicology Program, Division of Toxicology Research and Testing, Research Triangle Park, NC.

(45) OTS/EEB. 1992. Quantitative Structure-Activity Relationships (QSAR) Analysis. Office of Toxic Substances, U.S. Environmental Protection Agency, Washington, DC.

(46) RTECS. 1992. Registry Of Toxic Effects of Chemical Substances. Bethesda, MD: National Institutes of Health, National Library of Medicine.

(47) Shepard, T. H. 1986. Catalogue of Teratogenic Agents. 5th edition. Baltimore, MD: The Johns Hopkins University Press.

(48) SOSELS. 1986. Specific Organ System Exposure Levels. Prepared for the Office of Air Quality Planning and Standards, Pollution Assessment Branch, U.S. Environmental Protection Agency, Research Triangle Park, NC.

(49) Temple, A. R., English, P. H. 1979. Treatment of methapyrilene toxicity with physostigmine. Veterinarian Human Toxicol. 21(2):84-86.

XI. Regulatory Assessment Requirements

A. Executive Order 12291

Executive Order (E.O.) 12291 requires each federal agency to classify as "major" any rule likely to result in:

(1) An annual effect on the economy of $100 million or more; or

(2) A major increase in costs or prices for consumers, individual industries, Federal, State, or local government agencies, or geographic regions; or

(3) Significant adverse effects on competition, investment, productivity, innovation, or on the ability of United States-based enterprises to compete with foreign-based enterprises in domestic and export markets.

EPA's economic analysis estimates up to 4,611 additional reports entailing annual costs to EPA, industry, and States of about $6.9 million as a result of the proposed addition of the 68 chemicals and 2 chemical categories to the section 313 list of toxic chemicals. EPA anticipates that this proposed addition will not have a significant effect on competition, costs, or prices. Therefore, EPA has determined that this proposed rule is not "major."

Should the alternative proposal to set a 10,000 pound production volume threshold for listing be adopted, additional costs were not estimated to be significant. This result is due principally to two factors. First, the statutory reporting threshold of 25,000 pounds for manufacturers would still be in force, regardless of any volume criteria set for listing. Second, it is unlikely that more than a minimal number of additional user sites would be required to report (chemicals used in annual volumes of at least 10,000 pounds but manufactured in volumes less than 25,000 pounds would generate additional Form R reports under the 10,000 pound production volume criterion; such chemicals would not generate user reports under a 25,000 pound production volume cutoff for listing, because the chemicals would not be added the EPCRA section 313 list).

Incremental costs attributable to the proposed SNUR and incremental costs attributable to a promulgated SNUR were considered but, due to the great uncertainty associated with the frequency of occurrence of potentially regulated activities, such costs could only be presented at the unit cost level. These estimates are discussed briefly below.

Unit costs to industry associated with the proposed SNUR would result from export notifications required under TSCA section 12(b), and were estimated to be $65 for each exported chemical subject to the proposed SNUR, per foreign country, per year. Unit costs to EPA were estimated to be about $22.

With regard to a promulgated SNUR, unit costs to industry were estimated to range between $2,000 and $10,000 for

each significant new use notice or modification request prepared, while costs to EPA for issuing and administering the SNUR were estimated to be $2,000. [Incremental costs to industry in connection with a response not to engage in a significant new use could not be estimated.] As costs would only be incurred in the event that a chemical listed in the rule were manufactured, imported, or processed in excess of the listing threshold, and as such chemicals are currently not manufactured, imported, or processed in excess of 25,000 pounds, it is expected that any overall increase in incremental costs resulting from a promulgated SNUR would be small.

B. Regulatory Flexibility Act

The Regulatory Flexibility Act of 1980 requires each Federal agency to perform a Regulatory Flexibility Analysis for all rules that are likely to have a "significant impact on a substantial number of small entities."

40 CFR part 372 exempts certain small businesses from reporting; specifically, those facilities with fewer than 10 full-time employees. This exclusion exempts about one-half of all manufacturing facilities in Standard Industrial Classification (SIC) codes 20 through 39 from section 313 reporting. Additionally, facilities which manufacture or process less than 25,000 pounds or otherwise use less than 10,000 pounds of these chemicals annually are not required to report for these chemicals. Therefore, EPA concludes that the rule is not likely to significantly impact a substantial number of small entities.

C. Paperwork Reduction Act

OMB has approved the information collection requirements contained in this proposed rule under the provisions of the Paperwork Reduction Act, 44 U.S.C. 3501 et seq. and has assigned OMB control numbers 2070–0093 and 2070–0038.

The public reporting burden for this collection of information is estimated to average 43 hours per response, including time for reviewing instructions, searching existing data sources, gathering and maintaining the data needed, and completing and reviewing the collection of information.

Send comments regarding the burden estimate or any other aspect of this collection of information, including suggestions for reducing this burden, to Chief, Information Policy Branch, PM-223, U.S. Environmental Protection Agency, 401 M St., SW., Washington, DC, 20460; and to the Office of Information and Regulatory Affairs, Office of Management and Budget, 726 Jackson Place NW., Washington, DC 20503, marked "Attention: Desk Officer for EPA."

List of Subjects

40 CFR Part 372

Community right-to-know, Environmental protection, Reporting and recordkeeping requirements, Toxic chemicals.

40 CFR Part 721

Chemicals, Environmental protection, Hazardous materials, Recordkeeping and reporting requirements, Significant new uses.

Dated: August 31, 1991.

Victor J. Kimm,

Acting Assistant Administrator, Office of Prevention, Pesticides and Toxic Substances.

Therefore it is proposed that 40 CFR Chapter I be amended as follows:

1. Subchapter J is amended in part 372 as follows:

PART 372—[AMENDED]

a. The authority citation for part 372 would continue to read as follows:

Authority: 42 U.S.C. 11013 and 11028.

b. In § 372.65 by adding chemicals to paragraph (a) alphabetically and to paragraph (b) by CAS No. sequence and to paragraph (c) by alphabetically adding the categories to read as follows:

§ 372.65 Chemicals and chemical categories to which this part applies.

* * * * *

(a) * * *

Chemical Name	CAS No.	Effective date
* * *	* * * *	
Acetophenone	98–86–2	1/1/94
* * *	* * * *	
Amitrole	61–82–5	1/1/94
* * *	* * * *	
Azaserine	115–02–6	1/1/94
* * *	* * * *	
Benz[c]acridine	225–51–4	1/1/94
* * *	* * * *	
Benz[a]anthracene	56–55–3	1/1/94
* * *	* * * *	
Benzo[rst]pentaphene	189–55–9	1/1/94
Benzo[a]phenanthrene	218–01–9	1/1/94
Benzo[a]pyrene	50–32–8	1/1/94
* * *	* * * *	
Bis(2-chloroethoxy)methane	111–91–1	1/1/94
* * *	* * * *	
4-Bromophenyl phenyl ether	101–55–3	1/1/94
* * *	* * * *	
Carbonic difluoride	353–50–4	1/1/94
* * *	* * * *	
Chlorambucil	305–03–3	1/1/94
* * *	* * * *	
Chlornaphazine	494–03–1	1/1/94
* * *	* * * *	
p-Chloro-m-cresol	59–50–7	1/1/94
* * *	* * * *	
4-Chloro-o-toluidine hydrochloride	3165–93–3	1/1/94
* * *	* * * *	
Crotonaldehyde	4170–30–3	1/1/94
* * *	* * * *	
Cyclophosphamide	50–18–0	1/1/94

Chemical Name	CAS No.	Effective date
* * *	* * * *	
Daunomycin	20830-81-3	1/1/94
DDD	72-54-8	1/1/94
DDT	50-29-3	1/1/94
* * *	* * * *	
Dibenzo(a,h)anthracene	53-70-3	1/1/94
* * *	* * * *	
1,4-Dichloro-2-butene	764-41-0	1/1/94
* * *	* * * *	
1,2-Diethylhydrazine	1615-80-1	1/1/94
O,O-Diethyl-S-methyldithiophosphate	3288-58-2	1/1/94
* * *	* * * *	
Diethylstilbestrol	56-53-1	1/1/94
* * *	* * * *	
Dihydrosafrole	94-58-6	1/1/94
* * *	* * * *	
7,12-Dimethyl-benz[a]anthracene	57-97-6	1/1/94
* * *	* * * *	
1,2-Dimethylhydrazine	540-73-8	1/1/94
* * *	* * * *	
Ethylidene dichloride	75-34-3	1/1/94
Ethyl methanesulfonate	62-50-0	1/1/94
* * *	* * * *	
Fluoranthene	206-44-0	1/1/94
* * *	* * * *	
Formic acid	64-18-6	1/1/94
* * *	* * * *	
Glycidylaldehyde	765-34-4	1/1/94
* * *	* * * *	
Hexachlorophene	70-30-4	1/1/94
Hexachloropropene	1888-71-7	1/1/94
* * *	* * * *	
Hydrogen sulfide	7783-06-4	1/1/94
* * *	* * * *	
Indeno[1,2,3-cd]pyrene	193-39-5	1/1/94
* * *	* * * *	
Kepone	143-50-0	1/1/94
Lasiocarpine	303-34-4	1/1/94
* * *	* * * *	
Malononitrile	109-77-3	1/1/94
* * *	* * * *	
Melphalan	148-82-3	1/1/94
* * *	* * * *	
Methacrylonitrile	126-98-7	1/1/94
* * *	* * * *	
Methyl chlorocarbonate	79-22-1	1/1/94
3-Methylcholanthrene	56-49-5	1/1/94
* * *	* * * *	
Methyl mercaptan	74-93-1	1/1/94
* * *	* * * *	
2-Methylpyridine	109-06-8	1/1/94
* * *	* * * *	
Methylthiouracil	56-04-2	1/1/94
* * *	* * * *	
Mitomycin C	50-07-7	1/1/94
MNNG (N-methyl-N'-nitro-N-nitrosoguanidine)	70-25-7	1/1/94
* * *	* * * *	
N-Nitrosodiethanolamine	1116-54-7	1/1/94
* * *	* * * *	
N-Nitroso-N-methylurethane	615-53-2	1/1/94
* * *	* * * *	
N-Nitrosopyrrolidine	930-55-2	1/1/94
5-Nitro-o-toluidine	99-55-8	1/1/94
* * *	* * * *	
Paraldehyde	123-63-7	1/1/94
* * *	* * * *	
Pentachlorobenzene	608-93-5	1/1/94
Pentachloroethane	76-01-7	1/1/94
* * *	* * * *	
Phenacetin	62-44-2	1/1/94
* * *	* * * *	
Pronamide	23950-58-5	1/1/94
* * *	* * * *	
Reserpine	50-55-5	1/1/94
* * *	* * * *	
Streptozotocin	18883-66-4	1/1/94
* * *	* * * *	
1,2,4,5-Tetrachlorobenzene	95-94-3	1/1/94
1,1,1,2-Tetrachloroethane	630-20-6	1/1/94
* * *	* * * *	

Chemical Name	CAS No.	Effective date
Thiram	137-26-8	1/1/94
p-Toluidine	106-49-0	1/1/94
2,4,5-TP (Silvex)	93-72-1	1/1/94
1,3,5-Trinitrobenzene	99-35-4	1/1/94
Trypan blue	72-57-1	1/1/94
Uracil mustard	66-75-1	1/1/94

(b) * * *

CAS No.	Chemical Name	Effective Date
50-07-7	Mitomycin C	1/1/94
50-18-0	Cyclophosphamide	1/1/94
50-29-3	DDT	1/1/94
50-32-8	Benzo[a]pyrene	1/1/94
50-55-5	Reserpine	1/1/94
53-70-3	Dibenzo(a,h)anthracene	1/1/94
56-04-2	Methylthiouracil	1/1/94
56-49-5	3-Methylcholanthrene	1/1/94
56-53-1	Diethylstilbestrol	1/1/94
56-55-3	Benz[a]anthracene	1/1/94
57-97-6	7,12-Dimethyl-benz[a]anthracene	1/1/94
59-50-7	p-Chloro-m-cresol	1/1/94
61-82-5	Amitrole	1/1/94
62-44-2	Phenacetin	1/1/94
62-50-0	Ethyl methanesulfonate	1/1/94
64-18-6	Formic acid	1/1/94
66-75-1	Uracil mustard	1/1/94
70-25-7	MNNG (N-methyl-N'-nitro-N-nitrosoguanidine)	1/1/94
70-30-4	Hexachlorophene	1/1/94
72-54-8	DDD	1/1/94
72-57-1	Trypan blue	1/1/94
74-93-1	Methyl mercaptan	1/1/94
75-34-3	Ethylidene dichloride	1/1/94
76-01-7	Pentachloroethane	1/1/94
79-22-1	Methyl chlorocarbonate	1/1/94
93-72-1	2,4,5-TP(Silvex)	1/1/94
94-58-6	Dihydrosafrole	1/1/94
95-94-3	1,2,4,5-Tetrachlorobenzene	1/1/94
98-86-2	Acetophenone	1/1/94
99-35-4	1,3,5-Trinitrobenzene	1/1/94
99-55-8	5-Nitro-o-toluidine	1/1/94
101-55-3	4-Bromophenyl phenyl ether	1/1/94
106-49-0	p-Toluidine	1/1/94
109-06-8	2-Methylpyridine	1/1/94
109-77-3	Malononitrile	1/1/94

CAS No.	Chemical Name	Effective Date
111-91-1	Bis(2-chloroethoxy)methane	1/1/94
* * *	* * * * *	
115-02-6	Azaserine	1/1/94
* * *	* * * * *	
123-63-7	Paraldehyde	1/1/94
* * *	* * * * *	
126-98-7	Methacrylonitrile	1/1/94
* * *	* * * * *	
137-26-8	Thiram	1/1/94
* * *	* * * * *	
143-50-0	Kepone	1/1/94
148-82-3	Melphalan	1/1/94
* * *	* * * * *	
189-55-9	Benzo[rst]pentaphene	1/1/94
193-39-5	Indeno[1,2,3-cd]pyrene	1/1/94
206-44-0	Fluoranthene	1/1/94
218-01-9	Benzo[a]phenanthrene	1/1/94
225-51-4	Benz[c]acridine	1/1/94
* * *	* * * * *	
303-34-4	Lasiocarpine	1/1/94
305-03-3	Chlorambucil	1/1/94
* * *	* * * * *	
353-50-4	Carbonic difluoride	1/1/94
* * *	* * * * *	
494-03-1	Chlornaphazine	1/1/94
* * *	* * * * *	
540-73-8	1,2-Dimethylhydrazine	1/1/94
* * *	* * * * *	
608-93-5	Pentachlorobenzene	1/1/94
* * *	* * * * *	
615-53-2	N-Nitroso-N-methylurethane	1/1/94
* * *	* * * * *	
630-20-6	1,1,1,2-Tetrachloroethane	1/1/94
* * *	* * * * *	
764-41-0	1,4-Dichloro-2-butene	1/1/94
765-34-4	Glycidylaldehyde	1/1/94
* * *	* * * * *	
930-55-2	N-Nitrosopyrrolidine	1/1/94
* * *	* * * * *	
1116-54-7	N-Nitrosodiethanolamine	1/1/94
* * *	* * * * *	
1615-80-1	1,2-Diethylhydrazine	1/1/94
* * *	* * * * *	
1888-71-7	Hexachloropropene	1/1/94
* * *	* * * * *	
3165-93-3	4-Chloro-o-toluidine hydrochloride	1/1/94
3288-58-2	O,O-Diethyl-S-methyl dithiophosphate	1/1/94
* * *	* * * * *	
4170-30-3	Crotonaldehyde	1/1/94
* * *	* * * * *	
7783-06-4	Hydrogen sulfide	1/1/94
* * *	* * * * *	
18883-66-4	Streptozotocin	1/1/94
* * *	* * * * *	
20830-81-3	Daunomycin	1/1/94
23950-58-5	Pronamide	1/1/94
* * *	* * * * *	

(c) * * *

Category Name	Effective Date
* * *	* *
Ethylenebisdithiocarbamic acid, salts and esters	1/1/94
* * *	* *
Warfarin and salts	1/1/94
* * *	* *

2. Subchapter R is amended in part 721 as follows:

PART 721—[AMENDED]

a. The authority citation for part 721 would continue to read as follows:

Authority: 15 U.S.C. 2604, 2607 and 2625(c).

b. By adding new § 721.1430 to subpart E to read as follows:

§ 721.1430 Pentachlorobenzene.

(a) *Chemical substance and significant new use subject to reporting.* (1) The chemical substance pentachlorobenzene [CAS No. 608-93-5] is subject to reporting under this section for the significant new use described in paragraph (a)(2) of this section.

(2) The significant new use is: Manufacture, import, or processing of 25,000 pounds or more per year per facility for any use.

(b) *Specific requirements.* The provisions of subpart A of this part apply to this section except as modified by this paragraph.

(1) *Recordkeeping.* The following recordkeeping requirements are applicable to manufacturers, importers, and processors of this substance: § 721.125(a), (b), and (c).

(2) [Reserved]

c. By adding new § 721.1435 to subpart E to read as follows:

§ 721.1435 1,2,4,5-Tetrachlorobenzene.

(a) *Chemical substance and significant new use subject to reporting.* (1) The chemical substance 1,2,4,5-tetrachlorobenzene (CAS No. 95–94–3) is subject to reporting under this section for the significant new use described in paragraph (a)(2) of this section.

(2) The significant new use is: Manufacture, import, or processing of 25,000 pounds or more per year per facility for any use.

(b) *Specific requirements.* The provisions of subpart A of this part apply to this section except as modified by this paragraph.

(1) *Recordkeeping.* The following recordkeeping requirements are applicable to manufacturers, importers, and processors of this substance: § 721.125(a), (b), and (c).

(2) [Reserved]

d. By adding new § 721.1440 to subpart E to read as follows:

§ 721.1440 1,3,5-Trinitrobenzene.

(a) *Chemical substance and significant new use subject to reporting.* (1) The chemical substance 1,3,5-trinitrobenzene (CAS No. 99–35–4) is subject to reporting under this section for the significant new use described in paragraph (a)(2) of this section.

(2) The significant new use is: Manufacture, import, or processing of 25,000 pounds or more per year per facility for any use.

(b) *Specific requirements.* The provisions of subpart A of this part apply to this section except as modified by this paragraph.

(1) *Recordkeeping.* The following recordkeeping requirements are applicable to manufacturers, importers, and processors of this substance: § 721.125(a), (b), and (c).

(2) [Reserved]

e. By adding new § 721.2084 to subpart E to read as follows:

§ 721.2084 Carbon oxyfluoride (Carbonic difluoride).

(a) *Chemical substance and significant new use subject to reporting.* (1) The chemical substance carbon oxyfluoride (CAS No. 353–50–4) is subject to reporting under this section for the significant new use described in paragraph (a)(2) of this section.

(2) The significant new use is: Manufacture, import, or processing of 25,000 pounds or more per year per facility for any use.

(b) *Specific requirements.* The provisions of subpart A of this part apply to this section except as modified by this paragraph.

(1) *Recordkeeping.* The following recordkeeping requirements are applicable to manufacturers, importers, and processors of this substance: § 721.125(a), (b), and (c).

(2) [Reserved]

f. By adding new § 721.2092 to subpart E to read as follows:

§ 721.2092 3–Methylcholanthrene.

(a) *Chemical substance and significant new use subject to reporting.* (1) The chemical substance 3–methylcholanthene (CAS No. 56–49–5) is subject to reporting under this section for the significant new use described in paragraph (a)(2) of this section.

(2) The significant new use is: Manufacture, import, or processing of 25,000 pounds or more per year per facility for any use.

(b) *Specific requirements.* The provisions of subpart A of this part apply to this section except as modified by this paragraph.

(1) *Recordkeeping.* The following recordkeeping requirements are applicable to manufacturers, importers, and processors of this substance: § 721.125(a), (b), and (c).

(2) [Reserved]

g. By adding new § 721.2287 to subpart E to read as follows:

§ 721.2287 DDT.

(a) *Chemical substance and significant new use subject to reporting.* (1) The chemical substance DDT (CAS No. 50–29–3) is subject to reporting under this section for the significant new use described in paragraph (a)(2) of this section.

(2) The significant new use is: Manufacture, import, or processing of 25,000 pounds or more per year per facility for any use.

(b) *Specific requirements.* The provisions of subpart A of this part apply to this section except as modified by this paragraph.

(1) *Recordkeeping.* The following recordkeeping requirements are applicable to manufacturers, importers, and processors of this substance: § 721.125(a), (b), and (c).

(2) [Reserved]

h. By adding new § 721.2355 to subpart E to read as follows:

§ 721.2355 Diethylstilbestrol.

(a) *Chemical substance and significant new use subject to reporting.* (1) The chemical substance diethylstilbestrol (CAS No. 56–53–1) is subject to reporting under this section for the significant new use described in paragraph (a)(2) of this section.

(2) The significant new use is: Manufacture, import, or processing of 25,000 pounds or more per year per facility for any use.

(b) *Specific requirements.* The provisions of subpart A of this part apply to this section except as modified by this paragraph.

(1) *Recordkeeping.* The following recordkeeping requirements are applicable to manufacturers, importers, and processors of this substance: § 721.125(a), (b), and (c).

(2) [Reserved]

i. By adding new § 721.3350 to subpart E to read as follows:

§ 721.3350 N-Nitrosodiethanolamine.

(a) *Chemical substance and significant new use subject to reporting.* (1) The chemical substance N-nitrosodiethanolamine (CAS No. 1116–54–7) is subject to reporting under this section for the significant new use described in paragraph (a)(2) of this section.

(2) The significant new use is: Manufacture, import, or processing of 25,000 pounds or more per year per facility for any use.

(b) *Specific requirements.* The provisions of subpart A of this part apply to this section except as modified by this paragraph.

(1) *Recordkeeping.* The following recordkeeping requirements are applicable to manufacturers, importers, and processors of this substance: § 721.125(a), (b), and (c).

(2) [Reserved]

j. By adding new § 721.3430 to subpart E to read as follows:

§ 721.3430 4-Bromophenyl phenyl ether.

(a) *Chemical substance and significant new use subject to reporting.* (1) The chemical substance 4-bromophenyl phenyl ether (CAS No. 101–55–3) is subject to reporting under this section for the significant new use described in paragraph (a)(2) of this section.

(2) The significant new use is: Manufacture, import, or processing of 25,000 pounds or more per year per facility for any use.

(b) *Specific requirements.* The provisions of subpart A of this part apply to this section except as modified by this paragraph.

(1) *Recordkeeping.* The following recordkeeping requirements are applicable to manufacturers, importers, and processors of this substance: § 721.125(a), (b), and (c).

(2) [Reserved]

k. By adding new § 721.4080 to subpart E to read as follows:

§ 721.4080 MNNG (N-methyl-N'-nitro-N-nitrosoguanidine).

(a) *Chemical substance and significant new use subject to reporting.* (1) The chemical substance MNNG (N-methyl-N'-nitro-N-nitrosoguanidine) (CAS No. 70–25–7) is subject to reporting under this section for the significant new use described in paragraph (a)(2) of this section.

(2) The significant new use is: Manufacture, import, or processing of 25,000 pounds or more per year per facility for any use.

(b) *Specific requirements.* The provisions of subpart A of this part apply to this section except as modified by this paragraph.

(1) *Recordkeeping.* The following recordkeeping requirements are applicable to manufacturers, importers, and processors of this substance: § 721.125(a), (b), and (c).

(2) [Reserved]

l. By adding new § 721.4150 to subpart E to read as follows:

§ 721.4150 Hexachlorophene.

(a) *Chemical substance and significant new use subject to reporting.* (1) The chemical substance hexachlorophene (CAS No. 70–30–4) is subject to reporting under this section for the significant new use described in paragraph (a)(2) of this section.

(2) The significant new use is: Manufacture, import, or processing of 25,000 pounds or more per year per facility for any use.

(b) *Specific requirements.* The provisions of subpart A of this part apply to this section except as modified by this paragraph.

(1) *Recordkeeping.* The following recordkeeping requirements are applicable to manufacturers, importers, and processors of this substance: § 721.125(a), (b), and (c).

(2) [Reserved]

m. By adding new § 721.4155 to subpart E to read as follows:

§ 721.4155 Hexachloropropene.

(a) *Chemical substance and significant new use subject to reporting.* (1) The chemical substance hexachloropropene (CAS No. 1888–71–7) is subject to reporting under this section for the significant new use described in paragraph (a)(2) of this section.

(2) The significant new use is: Manufacture, import, or processing of 25,000 pounds or more per year per facility for any use.

(b) *Specific requirements.* The provisions of subpart A of this part apply to this section except as modified by this paragraph.

(1) *Recordkeeping.* The following recordkeeping requirements are applicable to manufacturers, importers, and processors of this substance: § 721.125(a), (b), and (c).

(2) [Reserved]

n. By adding new § 721.5175 to subpart E to read as follows:

§ 721.5175 Mitomycin C.

(a) *Chemical substance and significant new use subject to reporting.* (1) The chemical substance mitomycin C (CAS No. 50–07–7) is subject to reporting under this section for the significant new use described in paragraph (a)(2) of this section.

(2) The significant new use is: Manufacture, import, or processing of 25,000 pounds or more per year per facility for any use.

(b) *Specific requirements.* The provisions of subpart A of this part apply to this section except as modified by this paragraph.

(1) *Recordkeeping.* The following recordkeeping requirements are applicable to manufacturers, importers, and processors of this substance: § 721.125(a), (b), and (c).

(2) [Reserved]

o. By adding new § 721.5640 to subpart E to read as follows:

§ 721.5640 Paraldehyde.

(a) *Chemical substance and significant new use subject to reporting.* (1) The chemical substance paraldehyde (CAS No. 123–63–7) is subject to reporting under this section for the significant new use described in paragraph (a)(2) of this section.

(2) The significant new use is: Manufacture, import, or processing of 25,000 pounds or more per year per facility for any use.

(b) *Specific requirements.* The provisions of subpart A of this part apply to this section except as modified by this paragraph.

(1) *Recordkeeping.* The following recordkeeping requirements are applicable to manufacturers, importers, and processors of this substance: § 721.125(a), (b), and (c).

(2) [Reserved]

p. By adding new § 721.5710 to subpart E to read as follows:

§ 721.5710 Phenacetin.

(a) *Chemical substance and significant new use subject to reporting.* (1) The chemical substance phenacetin (CAS No. 62–44–2) is subject to reporting under this section for the significant new use described in paragraph (a)(2) of this section.

(2) The significant new use is: Manufacture, import, or processing of 25,000 pounds or more per year per facility for any use.

(b) *Specific requirements.* The provisions of subpart A of this part apply to this section except as modified by this paragraph.

(1) *Recordkeeping.* The following recordkeeping requirements are applicable to manufacturers, importers, and processors of this substance: § 721.125(a), (b), and (c).

(2) [Reserved]

q. By adding new § 721.9000 to subpart E to read as follows:

§ 721.9000 N-Nitrosopyrrolidine.

(a) *Chemical substance and significant new use subject to reporting.* (1) The chemical substance N-nitrosopyrrolidine (CAS No. 930–55–2) is subject to reporting under this section for the significant new use described in paragraph (a)(2) of this section.

(2) The significant new use is: Manufacture, import, or processing of 25,000 pounds or more per year per facility for any use.

(b) *Specific requirements.* The provisions of subpart A of this part apply to this section except as modified by this paragraph.

(1) *Recordkeeping.* The following recordkeeping requirements are applicable to manufacturers, importers, and processors of this substance: § 721.125(a), (b), and (c).

(2) [Reserved]

r. By adding new § 721.9470 to subpart E to read as follows:

§ 721.9470 Reserpine.

(a) *Chemical substance and significant new use subject to reporting.* (1) The chemical substance reserpine (CAS No. 50–55–5) is subject to reporting under this section for the significant new use described in paragraph (a)(2) of this section.

(2) The significant new use is: Manufacture, import, or processing of 25,000 pounds or more per year per facility for any use.

(b) *Specific requirements.* The provisions of subpart A of this part apply to this section except as modified by this paragraph.

(1) *Recordkeeping.* The following recordkeeping requirements are applicable to manufacturers, importers, and processors of this substance: § 721.125(a), (b), and (c).

(2) [Reserved]

s. By adding new § 721.9660 to subpart E to read as follows:

§ 721.9660 Methylthiouracil.

(a) *Chemical substance and significant new use subject to reporting.*

(1) The chemical substance methylthiouracil (CAS No. 56–04–2) is subject to reporting under this section for the significant new use described in paragraph (a)(2) of this section.

(2) The significant new use is: Manufacture, import, or processing of 25,000 pounds or more per year per facility for any use.

(b) *Specific requirements.* The provisions of subpart A of this part apply to this section except as modified by this paragraph.

(1) *Recordkeeping.* The following recordkeeping requirements are applicable to manufacturers, importers, and processors of this substance: § 721.125(a), (b), and (c).

(2) [Reserved]

t. By adding new § 721.9957 to subpart E to read as follows:

§ 721.9957 N-Nitroso-N-methylurethane.

(a) *Chemical substance and significant new use subject to reporting.* (1) The chemical substance N-nitroso-N-methylurethane (CAS No. 615–53–2) is subject to reporting under this section for the significant new use described in paragraph (a)(2) of this section.

(2) The significant new use is: Manufacture, import, or processing of 25,000 pounds or more per year per facility for any use.

(b) *Specific requirements.* The provisions of subpart A of this part apply to this section except as modified by this paragraph.

(1) *Recordkeeping.* The following recordkeeping requirements are applicable to manufacturers, importers, and processors of this substance: § 721.125(a), (b), and (c).

(2) [Reserved]

u. By adding new § 721.9580 to subpart E to read as follows:

§ 721.9580 Ethyl methanesulfonate.

(a) *Chemical substance and significant new use subject to reporting.* (1) The chemical substance ethyl methanesulfonate (CAS No. 62–50–0) is subject to reporting under this section for the significant new use described in paragraph (a)(2) of this section.

(2) The significant new use is: Manufacture, import, or processing of 25,000 pounds or more per year per facility for any use.

(b) *Specific requirements.* The provisions of subpart A of this part apply to this section except as modified by this paragraph.

(1) *Recordkeeping.* The following recordkeeping requirements are applicable to manufacturers, importers, and processors of this substance: § 721.125(a), (b), and (c).

(2) [Reserved]

v. By adding new § 721.9967 to subpart E to read as follows:

§ 721.9967 Warfarin and salts.

(a) *Chemical substance and significant new use subject to reporting.* (1) The chemical substance warfarin and its salts is subject to reporting under this section for the significant new use described in paragraph (a)(2) of this section.

(2) The significant new use is: Manufacture, import, or processing of 25,000 pounds or more per year per facility for any use.

(b) *Specific requirements.* The provisions of subpart A of this part apply to this section except as modified by this paragraph.

(1) *Recordkeeping.* The following recordkeeping requirements are applicable to manufacturers, importers, and processors of this substance: § 721.125(a), (b), and (c).

(2) [Reserved]

[FR Doc. 92–21534 Filed 9–4–92; 8:45 am]
BILLING CODE 6560–50–F

federal register

Tuesday
September 8, 1992

Part IX

Department of the Interior

Bureau of Indian Affairs

Indian Gaming; Notice

DEPARTMENT OF THE INTERIOR

Bureau of Indian Affairs

Indian Gaming

AGENCY: Bureau of Indian Affairs, Interior.

ACTION: Notice of approved amendment to Tribal-State Compact.

SUMMARY: Pursuant to 25 U.S.C. 2710, of the Indian Gaming Regulatory Act of 1988 (Pub. L. 100–497), the Secretary of the Interior shall publish, in the **Federal Register**, notice of approved Tribal-State Compacts for the purpose of engaging in Class III (casino) gambling on Indian reservations. The Assistant Secretary—Indian Affairs, Department of the Interior, through his delegated authority has approved the First Amendment to the April 6, 1992 Agreement Between the Assiniboine and Sioux Tribes of the Fort Peck Reservation and the State of Montana Concerning Video Keno, Poker and Bingo Games, Simulcast Racing and Other Class III Gaming, which was approved on June 24, 1992.

DATE: This action is effective September 8, 1992.

ADDRESS: Office of Tribal Services, Bureau of Indian Affairs, Department of the Interior, MS/MIB 4603, 1849 C Street, NW., Washington, DC 20240.

FOR FURTHER INFORMATION CONTACT: Chief, Division of Tribal Government Services, Bureau of Indian Affairs, Washington, DC 20240, (202) 208–7446.

SUPPLEMENTARY INFORMATION: This is to give notice of a change in the Tribal-State Compact between the Assiniboine and Sioux Tribes of the Fort Peck Reservation and the State of Montana, which was published as a notice in the **Federal Register** in 57 FR 29408 on July 1, 1992. The compact has been amended to include "Lottery Games," which adds a new subsection "P" to part III and a new subsection "D" to part V.

Dated: September 1, 1992.

David J. Matheson,

Acting Assistant Secretary—Indian Affairs.

[FR Doc. 92–21543 Filed 9–4–92; 8:45 am]

BILLING CODE 4310–02–M

federal register

Tuesday
September 8, 1992

Part X

The President

Proclamation 6469—Childhood Cancer Month, 1992

Federal Register
Vol. 57, No. 174
Tuesday, September 8, 1992

Presidential Documents

Title 3—

The President

Proclamation 6469 of September 3, 1992

Childhood Cancer Month, 1992

By the President of the United States of America

A Proclamation

This year nearly 8,000 American children will be diagnosed as having cancer. Such a diagnosis affects not only the young patient but also his or her entire family. Parents experience tremendous anguish knowing that their child is ailing or in pain. Brothers and sisters often share in that heartache, as well as in fears of the unknown. Daily life may be turned upside down for many months; for some, it may never be the same. As an expression of our concern for young cancer patients and their families, we set aside this month to reaffirm our support of continuing research and education.

Thanks to the many advances that have been made in cancer research, the majority of children who are diagnosed with cancer today will be alive and healthy 5 years from now. Indeed, the number of deaths from childhood cancers continues to drop as improved diagnostic and prognostic techniques, along with important breakthroughs in treatment, give hope to young people with leukemia, Wilm's tumor, Hodgkin's disease, and other cancers.

Such progress is testimony to the vitality of American science and to the contributions of the brave young patients who participate in clinical studies of new anti-cancer treatments. In recent years doctors have learned that bone marrow transplantation, which enables a child to receive very high doses of anti-cancer drugs, is an effective way of treating some types of leukemia. With this and other new techniques, nearly three-fourths of all children who are diagnosed as having leukemia can look forward to a complete cure. The treatment of Hodgkin's disease is yet another example of progress: today some 87 percent of children who are diagnosed as having this cancer of the lymphatic system can expect to be cured.

While these and other scientific advances are encouraging, they are but a part of the story of our increasing success in the fight against childhood cancer. This month, as we recognize the outstanding physicians and scientists who conduct pediatric cancer research in both the public and private sectors, we also honor the dedicated oncology nurses and social workers who comfort and assist young patients, the teachers and therapists who foster their intellectual and physical potential, and the many volunteers who provide family support groups, special camping and recreation facilities, and other helpful programs and services. Inspired by the extraordinary courage and optimism of young cancer patients, all of these Americans are making important contributions to the fight against childhood cancer. Their efforts merit our admiration and support.

The Congress, by House Joint Resolution 492, has designated September 1992 as "Childhood Cancer Month" and has requested the President to issue a proclamation in observance of this month.

NOW, THEREFORE, I, GEORGE BUSH, President of the United States of America, do hereby proclaim September 1992 as Childhood Cancer Month. I invite the Governors of the 50 States and the appropriate officials of all other areas under the jurisdiction of the United States to issue similar proclamations. I also encourage the American people to join with public health agencies, private voluntary associations, and other concerned organizations in observing this month with appropriate programs and activities.

IN WITNESS WHEREOF, I have hereunto set my hand this third day of September, in the year of our Lord nineteen hundred and ninety-two, and of the Independence of the United States of America the two hundred and seventeenth.

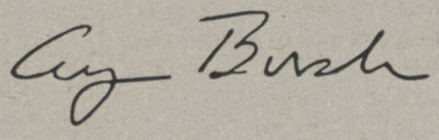

[FR Doc. 92-21731]
Filed 9-4-92; 11:05 am]
Billing code 3195-01-M

Reader Aids

Federal Register

Vol. 57, No. 174

Tuesday, September 8, 1992

INFORMATION AND ASSISTANCE

Federal Register

Index, finding aids & general information	202-523-5227
Public inspection desk	523-5215
Corrections to published documents	523-5237
Document drafting information	523-3187
Machine readable documents	523-3447

Code of Federal Regulations

Index, finding aids & general information	523-5227
Printing schedules	512-1557

Laws

Public Laws Update Service (numbers, dates, etc.)	523-6641
Additional information	523-5230

Presidential Documents

Executive orders and proclamations	523-5230
Public Papers of the Presidents	523-5230
Weekly Compilation of Presidential Documents	523-5230

The United States Government Manual

General information	523-5230

Other Services

Data base and machine readable specifications	523-3447
Guide to Record Retention Requirements	523-3187
Legal staff	523-4534
Privacy Act Compilation	523-3187
Public Laws Update Service (PLUS)	523-6641
TDD for the hearing impaired	523-5229

FEDERAL REGISTER PAGES AND DATES, SEPTEMBER

39597-40070.....1
40071-40300.....2
40301-40590.....3
40591-40826.....4
40827-41052.....8

CFR PARTS AFFECTED DURING SEPTEMBER

At the end of each month, the Office of the Federal Register publishes separately a List of CFR Sections Affected (LSA), which lists parts and sections affected by documents published since the revision date of each title.

1 CFR

2.....40024
3.....40024
11.....40024

3 CFR

Executive Orders:
12722 (See DOT rule of August 21).....39603
12724 (See DOT rule of August 21).....39603
12775 (See DOT rule of August 17).....39603
12779 (See DOT rule of August 17).....39603
Administrative Orders:
Presidential Determinations:
No. 92-39 of August 17, 1992.....40071
No. 92-40 of August 17, 1992.....40073
No. 92-42 of August 25, 1992.....40075
No. 92-43 of August 25, 1992.....40077
No. 92-44 of August 25, 1992.....40079
Proclamations:
6467.....40591
6468.....40827
6469.....41051

5 CFR

550.....40070

7 CFR

2.....40829
210.....40729
800.....40301
1207.....40081
1427.....40593
Proposed Rules:
319.....40872
1744.....39628
1902.....39631
1930.....39631
1944.....39635

8 CFR

214.....40830
251.....40830
258.....40830

9 CFR

Proposed Rules:
75.....40139
124.....40493
307.....40623
310.....40623

10 CFR

600.....40083
605.....40582
Proposed Rules:
1023.....40345

11 CFR

200.....39743

12 CFR

3.....40302
204.....40597
250.....40597
265.....40597
545.....40085
562.....40085
563.....40085
563c.....40085
571.....40085
Proposed Rules:
208.....39641
225.....39641
509.....40350
516.....40350
528.....40350
541.....40350
543.....40350
545.....40350
552.....40350
556.....40350
558.....40350
559.....40350
561.....40350
563.....40140, 40350, 40524
563b.....40350
563e.....40350
567.....40143, 40147, 40350, 40524
571.....40350, 40524
579.....40350
580.....40350
1625.....39743

14 CFR

13.....40094
39.....40307-40313, 40601, 40835-40838
71.....40095, 40096
200.....40097
203.....40097
205.....40097
206.....40097
231.....40097
232.....40097
263.....40097
288.....40097
294.....40097
296.....40097
297.....40097
298.....40097
302.....40097
372.....40097
399.....40097
Proposed Rules:
39.....40359, 40623, 40624

71.....40148–40156

15 CFR

60.....40840

Proposed Rules:

946.....40877

16 CFR

1115.....39597

17 CFR

16.....40601
30.....40603

Proposed Rules:

33.....40626

19 CFR

10.....40314, 40604
141.....40605
145.....40255
171.....40605
172.....40605

Proposed Rules:

4.....40627
141.....40361
142.....40361
143.....40361
151.....40361

20 CFR

655.....40966

21 CFR

5.....40315–40318
573.....40318

Proposed Rules:

131.....40255
310.....40944

24 CFR

25.....40111
91.....40038
135.....40111
570.....40038
905.....40113

25 CFR

Proposed Rules:

211.....40298
212.....40298

26 CFR

1.....40118, 40319, 40841
602.....40118, 40319,

Proposed Rules:

1.....39743, 40378

27 CFR

5.....40323
20.....40847
53.....40324
70.....40327
194.....39597

Proposed Rules:

4.....40380, 40884
5.....40884
250.....40885
251.....40886
252.....40887
290.....40889

28 CFR

50.....39598
80.....39598

29 CFR

506.....40966

30 CFR

Proposed Rules:

75.....40395

31 CFR

204.....40239
315.....39601
353.....39601
358.....40607
575.....39603
580.....39603

32 CFR

60.....40849
323.....40608
701.....40609
1906.....39604

Proposed Rules:

317.....40397

33 CFR

3.....39613
100.....40125, 40609, 40610
117.....39614
157.....40494
165.....40125, 40330, 40612
334.....40612

36 CFR

Proposed Rules:

51.....40496
1191.....41006

37 CFR

1.....40493
2.....40493
202.....39615

38 CFR

3.....40944
21.....40613
36.....40615

Proposed Rules:

3.....40424

39 CFR

Proposed Rules:

111.....39646, 40890

40 CFR

52.....40126, 40331–40336
55.....40792
180.....40128

Proposed Rules:

52.....40157, 40159
62.....40628
180.....40161–40163
300.....39659
372.....41020
721.....41020

42 CFR

410.....39743
412.....39746
413.....39746

43 CFR

Public Land Orders:

6943.....39616

44 CFR

64.....39617
67.....39619

45 CFR

641.....40337

46 CFR

272.....39621
298.....39621
510.....39622, 40129
514.....39622
560.....40616
572.....40616
580.....39622
582.....39622

47 CFR

73...39624, 39625, 40342, 40849
90.....40850
95.....40343
97.....40343

Proposed Rules:

Ch. I.....39661
2.....40630
15.....40630
22.....40630
25.....40425, 40426, 40891
61.....40426
69.....40426
73.....39663
99.....40630

48 CFR

31.....40344
1801.....40851
1803.....40851
1804.....40851
1805.....40851
1806.....40851
1807.....40851
1808.....40851
1809.....40851
1813.....40851
1815.....40851
1816.....40851
1819.....40851
1822.....40851
1823.....40851
1825.....40851
1827.....40851
1831.....40851
1832.....40851
1833.....40851
1836.....40851
1837.....40851
1842.....40851
1845.....40851
1849.....40851
1851.....40851
1852.....40851
1853.....40851
1870.....40851

Proposed Rules:

45.....40891

49 CFR

1.....40620
350.....40946
355.....40946
571.....40131
396.....40946
1039.....40620
1109.....39743
1313.....40620
1321.....40857

Proposed Rules:

571.....40165
1002.....39743
1039.....39663

50 CFR

20.....40032
204.....40858
217.....40859, 40861
227.....40859, 40861
299.....40858
653.....40134
661.....39626, 40135, 40136, 40622
663.....40136
672.....40137, 40255
683.....40255

Proposed Rules:

17.....39664, 40429
216.....40166
611.....40493
685.....40493

LIST OF PUBLIC LAWS

This is a continuing list of public bills from the current session of Congress which have become Federal laws. It may be used in conjunction with "P L U S" (Public Laws Update Service) on 202–523–6641. The text of laws is not published in the **Federal Register** but may be ordered in individual pamphlet form (referred to as "slip laws") from the Superintendent of Documents, U.S. Government Printing Office, Washington, DC 20402 (phone, 202–512–2470).

H.J. Res. 492/P.L. 102–364

Designating September 1992 as "Childhood Cancer Month". (Sept. 2, 1992; 106 Stat. 970; 2 pages) Price: $1.00

Last List August 31, 1992

CFR CHECKLIST

This checklist, prepared by the Office of the Federal Register, is published weekly. It is arranged in the order of CFR titles, stock numbers, prices, and revision dates.

An asterisk (*) precedes each entry that has been issued since last week and which is now available for sale at the Government Printing Office.

A checklist of current CFR volumes comprising a complete CFR set, also appears in the latest issue of the LSA (List of CFR Sections Affected), which is revised monthly.

The annual rate for subscription to all revised volumes is $620.00 domestic, $155.00 additional for foreign mailing.

Mail orders to the Superintendent of Documents, Attn: New Orders, P.O. Box 371954, Pittsburgh, PA 15250-7954. All orders must be accompanied by remittance (check, money order, GPO Deposit Account, VISA, or Master Card). Charge orders may be telephoned to the GPO Order Desk, Monday through Friday, at **(202) 783-3238** from 8:00 a.m. to 4:00 p.m. eastern time, or FAX your charge orders to **(202) 512-2233**.

Title	Stock Number	Price	Revision Date
1, 2 (2 Reserved)	(869-017-00001-9)	$13.00	Jan. 1, 1992
3 (1991 Compilation and Parts 100 and 101)	(869-017-00002-7)	17.00	[1] Jan. 1, 1992
4	(869-017-00003-5)	16.00	Jan. 1, 1992
5 Parts:			
1-699	(869-017-00004-3)	18.00	Jan. 1, 1992
700-1199	(869-017-00005-1)	14.00	Jan. 1, 1992
1200-End, 6 (6 Reserved)	(869-017-00006-0)	19.00	Jan. 1, 1992
7 Parts:			
0-26	(869-017-00007-8)	17.00	Jan. 1, 1992
27-45	(869-017-00008-6)	12.00	Jan. 1, 1992
46-51	(869-017-00009-4)	18.00	Jan. 1, 1992
52	(869-017-00010-8)	24.00	Jan. 1, 1992
53-209	(869-017-00011-6)	19.00	Jan. 1, 1992
210-299	(869-017-00012-4)	26.00	Jan. 1, 1992
300-399	(869-017-00013-2)	13.00	Jan. 1, 1992
400-699	(869-017-00014-1)	15.00	Jan. 1, 1992
700-899	(869-017-00015-9)	18.00	Jan. 1, 1992
900-999	(869-017-00016-7)	29.00	Jan. 1, 1992
1000-1059	(869-017-00017-5)	17.00	Jan. 1, 1992
1060-1119	(869-017-00018-3)	13.00	Jan. 1, 1992
1120-1199	(869-017-00019-1)	9.50	Jan. 1, 1992
1200-1499	(869-017-00020-5)	22.00	Jan. 1, 1992
1500-1899	(869-017-00021-3)	15.00	Jan. 1, 1992
1900-1939	(869-017-00022-1)	11.00	Jan. 1, 1992
1940-1949	(869-017-00023-0)	23.00	Jan. 1, 1992
1950-1999	(869-017-00024-8)	26.00	Jan. 1, 1992
2000-End	(869-017-00025-6)	11.00	Jan. 1, 1992
8	(869-017-00026-4)	17.00	Jan. 1, 1992
9 Parts:			
1-199	(869-017-00027-2)	23.00	Jan. 1, 1992
200-End	(869-017-00028-1)	18.00	Jan. 1, 1992
10 Parts:			
0-50	(869-017-00029-9)	25.00	Jan. 1, 1992
51-199	(869-017-00030-2)	18.00	Jan. 1, 1992
200-399	(869-017-00031-1)	13.00	[4] Jan. 1, 1987
400-499	(869-017-00032-9)	20.00	Jan. 1, 1992
500-End	(869-017-00033-7)	28.00	Jan. 1, 1992
11	(869-017-00034-5)	12.00	Jan. 1, 1992
12 Parts:			
1-199	(869-017-00035-3)	13.00	Jan. 1, 1992
200-219	(869-017-00036-1)	13.00	Jan. 1, 1992
220-299	(869-017-00037-0)	22.00	Jan. 1, 1992
300-499	(869-017-00038-8)	18.00	Jan. 1, 1992
500-599	(869-017-00039-6)	17.00	Jan. 1, 1992
600-End	(869-017-00040-0)	19.00	Jan. 1, 1992
13	(869-017-00041-8)	25.00	Jan. 1, 1992
14 Parts:			
1-59	(869-017-00042-6)	25.00	Jan. 1, 1992
60-139	(869-017-00043-4)	22.00	Jan. 1, 1992
140-199	(869-017-00044-2)	11.00	Jan. 1, 1992
200-1199	(869-017-00045-1)	20.00	Jan. 1, 1992
1200-End	(869-017-00046-9)	14.00	Jan. 1, 1992
15 Parts:			
0-299	(869-017-00047-7)	13.00	Jan. 1, 1992
300-799	(869-017-00048-5)	21.00	Jan. 1, 1992
800-End	(869-017-00049-3)	17.00	Jan. 1, 1992
16 Parts:			
0-149	(869-017-00050-7)	6.00	Jan. 1, 1992
150-999	(869-017-00051-5)	14.00	Jan. 1, 1992
1000-End	(869-017-00052-3)	20.00	Jan. 1, 1992
17 Parts:			
1-199	(869-017-00054-0)	15.00	Apr. 1, 1992
200-239	(869-017-00055-8)	17.00	Apr. 1, 1992
240-End	(869-017-00056-6)	24.00	Apr. 1, 1992
18 Parts:			
1-149	(869-017-00057-4)	16.00	Apr. 1, 1992
150-279	(869-017-00058-2)	19.00	Apr. 1, 1992
280-399	(869-017-00059-1)	14.00	Apr. 1, 1992
400-End	(869-017-00060-4)	9.50	Apr. 1, 1992
19 Parts:			
1-199	(869-017-00061-2)	28.00	Apr. 1, 1992
200-End	(869-017-00062-1)	9.50	Apr. 1, 1992
20 Parts:			
1-399	(869-017-00063-9)	16.00	Apr. 1, 1992
400-499	(869-017-00064-7)	31.00	Apr. 1, 1992
500-End	(869-017-00065-5)	21.00	Apr. 1, 1992
21 Parts:			
1-99	(869-017-00066-3)	13.00	Apr. 1, 1992
100-169	(869-017-00067-1)	14.00	Apr. 1, 1992
170-199	(869-017-00068-0)	18.00	Apr. 1, 1992
200-299	(869-017-00069-8)	5.50	Apr. 1, 1992
300-499	(869-017-00070-1)	29.00	Apr. 1, 1992
500-599	(869-017-00071-0)	21.00	Apr. 1, 1992
600-799	(869-017-00072-8)	7.00	Apr. 1, 1992
800-1299	(869-017-00073-6)	18.00	Apr. 1, 1992
1300-End	(869-017-00074-4)	9.00	Apr. 1, 1992
22 Parts:			
1-299	(869-017-00075-2)	26.00	Apr. 1, 1992
300-End	(869-017-00076-1)	19.00	Apr. 1, 1992
23	(869-017-00077-9)	18.00	Apr. 1, 1992
24 Parts:			
0-199	(869-017-00078-7)	34.00	Apr. 1, 1992
200-499	(869-017-00079-5)	32.00	Apr. 1, 1992
500-699	(869-017-00080-9)	13.00	Apr. 1, 1992
700-1699	(869-017-00081-7)	34.00	Apr. 1, 1992
1700-End	(869-017-00082-5)	13.00	Apr. 1, 1992
25	(869-017-00083-3)	25.00	Apr. 1, 1992
26 Parts:			
§§ 1.0-1-1.60	(869-017-00084-1)	17.00	Apr. 1, 1992
§§ 1.61-1.169	(869-017-00085-0)	33.00	Apr. 1, 1992
§§ 1.170-1.300	(869-017-00086-8)	19.00	Apr. 1, 1992
§§ 1.301-1.400	(869-017-00087-6)	17.00	Apr. 1, 1992
§§ 1.401-1.500	(869-017-00088-4)	38.00	Apr. 1, 1992
§§ 1.501-1.640	(869-017-00089-2)	19.00	Apr. 1, 1992
§§ 1.641-1.850	(869-017-00090-6)	19.00	Apr. 1, 1992
§§ 1.851-1.907	(869-017-00091-4)	23.00	Apr. 1, 1992
§§ 1.908-1.1000	(869-017-00092-2)	26.00	Apr. 1, 1992
§§ 1.1001-1.1400	(869-017-00093-1)	19.00	Apr. 1, 1992
§§ 1.1401-End	(869-017-00094-9)	26.00	Apr. 1, 1992
2-29	(869-017-00095-7)	22.00	Apr. 1, 1992
30-39	(869-017-00096-5)	15.00	Apr. 1, 1992
40-49	(869-017-00097-3)	12.00	Apr. 1, 1992
50-299	(869-017-00098-1)	15.00	Apr. 1, 1992
300-499	(869-017-00099-0)	20.00	Apr. 1, 1992
500-599	(869-017-00100-7)	6.00	[5] Apr. 1, 1990

Title	Stock Number	Price	Revision Date
600–End	(869–017–00101–5)	6.50	Apr. 1, 1992
27 Parts:			
1–199	(869–017–00102–3)	34.00	Apr. 1, 1992
200–End	(869–017–00103–1)	11.00	[6]Apr. 1, 1991
28	(869–013–00104–4)	28.00	July 1, 1991
29 Parts:			
0–99	(869–017–00105–8)	19.00	July 1, 1992
100–499	(869–013–00106–6)	9.00	July 1, 1992
500–899	(869–013–00107–9)	27.00	July 1, 1991
900–1899	(869–013–00108–7)	12.00	July 1, 1991
1900–1910 (§§ 1901.1 to 1910.999)	(869–013–00109–5)	24.00	July 1, 1991
1910 (§§ 1910.1000 to end)	(869–013–00110–9)	14.00	July 1, 1991
1911–1925	(869–017–00111–2)	9.00	[7] July 1, 1989
1926	(869–013–00112–5)	12.00	July 1, 1991
1927–End	(869–013–00113–3)	25.00	July 1, 1991
30 Parts:			
1–199	(869–013–00114–1)	22.00	July 1, 1991
*200–699	(869–017–00115–5)	19.00	July 1, 1992
700–End	(869–013–00116–8)	21.00	July 1, 1991
31 Parts:			
0–199	(869–013–00117–6)	15.00	July 1, 1991
200–End	(869–013–00118–4)	20.00	July 1, 1991
32 Parts:			
1–39, Vol. I		15.00	[2] July 1, 1984
1–39, Vol. II		19.00	[2] July 1, 1984
1–39, Vol. III		18.00	[2] July 1, 1984
1–189	(869–013–00119–2)	25.00	July 1, 1991
190–399	(869–013–00120–6)	29.00	July 1, 1991
400–629	(869–013–00121–4)	26.00	July 1, 1991
630–699	(869–013–00122–2)	14.00	July 1, 1991
700–799	(869–013–00123–1)	17.00	July 1, 1991
800–End	(869–017–00124–4)	20.00	July 1, 1992
33 Parts:			
1–124	(869–013–00125–7)	15.00	July 1, 1991
125–199	(869–013–00126–5)	18.00	July 1, 1991
200–End	(869–017–00127–9)	23.00	July 1, 1992
34 Parts:			
1–299	(869–013–00128–1)	24.00	July 1, 1991
300–399	(869–013–00129–0)	14.00	July 1, 1991
400–End	(869–013–00130–3)	26.00	July 1, 1991
35	(869–013–00131–1)	10.00	July 1, 1991
36 Parts:			
1–199	(869–017–00132–5)	15.00	July 1, 1992
*200–End	(869–017–00133–3)	32.00	July 1, 1992
37	(869–013–00134–6)	15.00	July 1, 1991
38 Parts:			
0–17	(869–013–00135–4)	24.00	July 1, 1991
18–End	(869–013–00136–2)	22.00	July 1, 1991
39	(869–017–00137–6)	16.00	July 1, 1992
40 Parts:			
1–51	(869–013–00138–9)	27.00	July 1, 1991
52	(869–013–00139–7)	28.00	July 1, 1991
53–60	(869–013–00140–1)	31.00	July 1, 1991
61–80	(869–013–00141–9)	14.00	July 1, 1991
81–85	(869–013–00142–7)	11.00	July 1, 1991
86–99	(869–013–00143–5)	29.00	July 1, 1991
100–149	(869–013–00144–3)	30.00	July 1, 1991
150–189	(869–013–00145–1)	20.00	July 1, 1991
190–259	(869–013–00146–0)	13.00	July 1, 1991
260–299	(869–013–00147–8)	31.00	July 1, 1991
300–399	(869–013–00148–6)	13.00	July 1, 1991
*400–424	(869–017–00149–0)	26.00	July 1, 1992
425–699	(869–013–00150–8)	23.00	[7] July 1, 1989
700–789	(869–013–00151–6)	20.00	July 1, 1991
790–End	(869–013–00152–4)	22.00	July 1, 1991

Title	Stock Number	Price	Revision Date
41 Chapters:			
1, 1–1 to 1–10		13.00	[3] July 1, 1984
1, 1–11 to Appendix, 2 (2 Reserved)		13.00	[3] July 1, 1984
3–6		14.00	[3] July 1, 1984
7		6.00	[3] July 1, 1984
8		4.50	[3] July 1, 1984
9		13.00	[3] July 1, 1984
10–17		9.50	[3] July 1, 1984
18, Vol. I, Parts 1–5		13.00	[3] July 1, 1984
18, Vol. II, Parts 6–19		13.00	[3] July 1, 1984
18, Vol. III, Parts 20–52		13.00	[3] July 1, 1984
19–100		13.00	[3] July 1, 1984
1–100	(869–013–00153–2)	8.50	[8] July 1, 1990
101	(869–013–00154–1)	22.00	July 1, 1991
102–200	(869–017–00155–4)	11.00	[9] July 1, 1991
201–End	(869–013–00156–7)	10.00	July 1, 1991
42 Parts:			
1–60	(869–013–00157–5)	17.00	Oct. 1, 1991
61–399	(869–013–00158–3)	5.50	Oct. 1, 1991
400–429	(869–013–00159–1)	21.00	Oct. 1, 1991
430–End	(869–013–00160–5)	26.00	Oct. 1, 1991
43 Parts:			
1–999	(869–013–00161–3)	20.00	Oct. 1, 1991
1000–3999	(869–013–00162–1)	26.00	Oct. 1, 1991
4000–End	(869–013–00163–0)	12.00	Oct. 1, 1991
44	(869–013–00164–8)	22.00	Oct. 1, 1991
45 Parts:			
1–199	(869–013–00165–6)	18.00	Oct. 1, 1991
200–499	(869–013–00166–4)	12.00	Oct. 1, 1991
500–1199	(869–013–00167–2)	26.00	Oct. 1, 1991
1200–End	(869–013–00168–1)	19.00	Oct. 1, 1991
46 Parts:			
1–40	(869–013–00169–9)	15.00	Oct. 1, 1991
41–69	(869–013–00170–2)	14.00	Oct. 1, 1991
70–89	(869–013–00171–1)	7.00	Oct. 1, 1991
90–139	(869–013–00172–9)	12.00	Oct. 1, 1991
140–155	(869–013–00173–7)	10.00	Oct. 1, 1991
156–165	(869–013–00174–5)	14.00	Oct. 1, 1991
166–199	(869–013–00175–3)	14.00	Oct. 1, 1991
200–499	(869–013–00176–1)	20.00	Oct. 1, 1991
500–End	(869–013–00177–0)	11.00	Oct. 1, 1991
47 Parts:			
0–19	(869–013–00178–8)	19.00	Oct. 1, 1991
20–39	(869–013–00179–6)	19.00	Oct. 1, 1991
40–69	(869–013–00180–0)	10.00	Oct. 1, 1991
70–79	(869–013–00181–8)	18.00	Oct. 1, 1991
80–End	(869–013–00182–6)	20.00	Oct. 1, 1991
48 Chapters:			
1 (Parts 1–51)	(869–013–00183–4)	31.00	Oct. 1, 1991
1 (Parts 52–99)	(869–013–00184–2)	19.00	Oct. 1, 1991
2 (Parts 201–251)	(869–013–00185–1)	13.00	Dec. 31, 1991
2 (Parts 252–299)	(869–013–00186–9)	10.00	Dec. 31, 1991
3–6	(869–013–00187–7)	19.00	Oct. 1, 1991
7–14	(869–013–00188–5)	26.00	Oct. 1, 1991
15–End	(869–013–00189–3)	30.00	Oct. 1, 1991
49 Parts:			
1–99	(869–013–00190–7)	20.00	Oct. 1, 1991
100–177	(869–013–00191–5)	23.00	Dec. 31, 1991
178–199	(869–013–00192–3)	17.00	Dec. 31, 1991
200–399	(869–013–00193–1)	22.00	Oct. 1, 1991
400–999	(869–013–00194–0)	27.00	Oct. 1, 1991
1000–1199	(869–013–00195–8)	17.00	Oct. 1, 1991
1200–End	(869–013–00196–6)	19.00	Oct. 1, 1991
50 Parts:			
1–199	(869–013–00197–4)	21.00	Oct. 1, 1991
200–599	(869–013–00198–2)	17.00	Oct. 1, 1991
600–End	(869–013–00199–1)	17.00	Oct. 1, 1991
CFR Index and Findings Aids	(869–017–00053–1)	31.00	Jan. 1, 1992

Title	Stock Number	Price	Revision Date
Complete 1992 CFR set		620.00	1992
Microfiche CFR Edition:			
Complete set (one-time mailing)		185.00	1989
Complete set (one-time mailing)		188.00	1990
Complete set (one-time mailing)		188.00	1991
Subscription (mailed as issued)		188.00	1992
Individual copies		2.00	1992

[1] Because Title 3 is an annual compilation, this volume and all previous volumes should be retained as a permanent reference source.

[2] The July 1, 1985 edition of 32 CFR Parts 1–189 contains a note only for Parts 1–39 inclusive. For the full text of the Defense Acquisition Regulations in Parts 1–39, consult the three CFR volumes issued as of July 1, 1984, containing those parts.

[3] The July 1, 1985 edition of 41 CFR Chapters 1–100 contains a note only for Chapters 1 to 49 inclusive. For the full text of procurement regulations in Chapters 1 to 49, consult the eleven CFR volumes issued as of July 1, 1984 containing those chapters.

[4] No amendments to this volume were promulgated during the period Jan. 1, 1987 to Dec. 31, 1991. The CFR volume issued January 1, 1987, should be retained.

[5] No amendments to this volume were promulgated during the period Apr. 1, 1990 to Mar. 31, 1991. The CFR volume issued April 1, 1990, should be retained.

[6] No amendments to this volume were promulgated during the period Apr. 1, 1991 to Mar. 30, 1992. The CFR volume issued April 1, 1991, should be retained.

[7] No amendments to this volume were promulgated during the period July 1, 1989 to June 30, 1992. The CFR volume issued July 1, 1989, should be retained.

[8] No amendments to this volume were promulgated during the period July 1, 1990 to June 30, 1991. The CFR volume issued July 1, 1990, should be retained.

[9] No amendments to this volume were promulgated during the period July 1, 1991 to June 30, 1992. The CFR volume issued July 1, 1991, should be retained.

FEDERAL REGISTER SUBSCRIBERS: IMPORTANT INFORMATION ABOUT YOUR SUBSCRIPTION

After 6 years without an adjustment, it has become necessary to increase the price of the **Federal Register** in order to begin recovering the actual costs of providing this subscription service. Effective October 1, 1992, the price for the **Federal Register** will increase and be offered as follows:

(1) **FEDERAL REGISTER COMPLETE SERVICE**—Each business day you can continue to receive the daily **Federal Register**, plus the monthly **Federal Register Index** and **Code of Federal Regulations, List of Sections Affected (LSA)**, all for **$415.00** per year.

(2) **FEDERAL REGISTER DAILY ONLY SERVICE**—With this subscription service, you will receive the **Federal Register** every business day for **$375.00** per year.

HOW WILL THIS AFFECT YOUR CURRENT SUBSCRIPTION?

You will receive your current complete **Federal Register** service for the length of time remaining in your subscription.

AT RENEWAL TIME

At renewal time, to keep this important subscription coming—you can continue to receive the complete **Federal Register** service by simply renewing for the entire package, or you can select and order only the parts that suit your needs:

- renew your entire **Federal Register Service** (complete service)

or select. . .

- the daily only **Federal Register** (basic service)
- and complement the basic service with either of the following supplements: the monthly **Federal Register Index** or the monthly **LSA**

When your current subscription expires, you will receive a renewal notice to continue the complete **Federal Register** service. At that time, you will also receive an order form for the daily **Federal Register** basic service, the **Federal Register Index**, and the **LSA**.

To know when to expect the renewal notice, check the top line of your subscription mailing label for the month and year of expiration as shown in this sample:

A renewal notice will be sent approximately 90 days before the end of this month.

