8-18-92
Vol. 57 No. 160
Pages 37079-37392

federal register

Tuesday
August 18, 1992

Briefing on How To Use the Federal Register
For information on a briefing in Atlanta, GA, see announcement on the inside cover of this issue.

FEDERAL REGISTER Published daily, Monday through Friday, (not published on Saturdays, Sundays, or on official holidays), by the Office of the Federal Register, National Archives and Records Administration, Washington, DC 20408, under the Federal Register Act (49 Stat. 500, as amended; 44 U.S.C. Ch. 15) and the regulations of the Administrative Committee of the Federal Register (1 CFR Ch. I). Distribution is made only by the Superintendent of Documents, U.S. Government Printing Office, Washington, DC 20402.

The **Federal Register** provides a uniform system for making available to the public regulations and legal notices issued by Federal agencies. These include Presidential proclamations and Executive Orders and Federal agency documents having general applicability and legal effect, documents required to be published by act of Congress and other Federal agency documents of public interest. Documents are on file for public inspection in the Office of the Federal Register the day before they are published, unless earlier filing is requested by the issuing agency.

The seal of the National Archives and Records Administration authenticates this issue of the **Federal Register** as the official serial publication established under the Federal Register Act. 44 U.S.C. 1507 provides that the contents of the **Federal Register** shall be judicially noticed.

The **Federal Register** will be furnished by mail to subscribers for $340 per year in paper form; $195 per year in microfiche form; or $37,500 per year for the magnetic tape. Six-month subscriptions are also available at one-half the annual rate. The charge for individual copies in paper or microfiche form is $1.50 for each issue, or $1.50 for each group of pages as actually bound, or $175.00 per magnetic tape. Remit check or money order, made payable to the Superintendent of Documents. Mail to: New Orders, Superintendent of Documents, P.O. Box 371954, Pittsburgh, PA 15250–7954, or charge to your GPO Deposit Account or VISA or Mastercard.

There are no restrictions on the republication of material appearing in the **Federal Register.**

How To Cite This Publication: Use the volume number and the page number. Example: 57 FR 12345.

SUBSCRIPTIONS AND COPIES

PUBLIC

Subscriptions:

Paper or fiche	202–783–3238
Magnetic tapes	512–2235
Problems with public subscriptions	512–2303

Single copies/back copies:

Paper or fiche	783–3238
Magnetic tapes	512–2235
Problems with public single copies	512–2457

FEDERAL AGENCIES

Subscriptions:

Paper or fiche	523–5240
Magnetic tapes	512–2235
Problems with Federal agency subscriptions	523–5243

For other telephone numbers, see the Reader Aids section at the end of this issue.

THE FEDERAL REGISTER
WHAT IT IS AND HOW TO USE IT

FOR: Any person who uses the Federal Register and Code of Federal Regulations.

WHO: The Office of the Federal Register.

WHAT: Free public briefings (approximately 3 hours) to present:

1. The regulatory process, with a focus on the Federal Register system and the public's role in the development of regulations.
2. The relationship between the Federal Register and Code of Federal Regulations.
3. The important elements of typical Federal Register documents.
4. An introduction to the finding aids of the FR/CFR system.

WHY: To provide the public with access to information necessary to research Federal agency regulations which directly affect them. There will be no discussion of specific agency regulations.

ATLANTA, GA

WHEN: September 17, at 9:00 a.m.
WHERE: Centers for Disease Control
1600 Clinton Rd., NE.
Auditorium A
Atlanta, GA (Parking available)
RESERVATIONS: [404–639–3528 (Atlanta area)]
1–800–347–1997 (outside Atlanta area)

Contents

Federal Register
Vol. 57, No. 160
Tuesday, August 18, 1992

Agency for Toxic Substances and Disease Registry
NOTICES
Public health assessment; interim procedures and decision criteria, 37382

Agriculture Department
See Animal and Plant Health Inspection Service
See Commodity Credit Corporation
See Forest Service

Alcohol, Drug Abuse, and Mental Health Administration
NOTICES
Meetings; advisory committees:
September, 37166

Animal and Plant Health Inspection Service
RULES
District of Columbia; plants and plant products movement, 37079
Exportation and importation of animals and animal products:
Northern Ireland and Republic of Ireland meat and meat products; importation restrictions, 37081
Interstate transportation of animals and animal products (quarantine):
Brucellosis in cattle and bison—
State and area classifications, 37080, 37081

Antitrust Division
NOTICES
National cooperative research notifications:
Petroleum Environmental Research Forum, 37171

Army Department
NOTICES
Meetings:
Armed Forces Epidemiological Board, 37151

Children and Families Administration
NOTICES
Agency information collection activities under OMB review, 37165

Commerce Department
See Export Administration Bureau
See International Trade Administration
See National Oceanic and Atmospheric Administration
NOTICES
Agency information collection activities under OMB review, 37146

Committee for the Implementation of Textile Agreements
NOTICES
Cotton, wool, and man-made textiles:
India, 37148

Commodity Credit Corporation
NOTICES
Corporation bylaws, 37143

Copyright Royalty Tribunal
NOTICES
Public broadcasting royalty fees:
Adjustment proceedings, 37149

Defense Department
See Army Department
See Defense Logistics Agency
See Navy Department
NOTICES
Agency information collection activities under OMB review, 37150
Federal Acquisition Regulation (FAR):
Agency information collection activities under OMB review, 37149
Meetings:
Electron Devices Advisory Group, 37150
Government-Industry Technical Data Committee, 37151

Defense Logistics Agency
PROPOSED RULES
Acquisition regulations:
Contracts—
Statistical Process Control (SPC); withdrawal, 37142

Education Department
NOTICES
Grants and cooperative agreements; availability, etc.:
Clearinghouses for individuals with disabilities program, 37360
Fulbright-Hays —
Group projects abroad program, 37151
National Institute on Disability and Rehabilitation Research—
Knowledge dissemination and utilization program, etc., 37338
Undergraduate international studies and foreign language program, etc., 37152

Employment and Training Administration
NOTICES
Adjustment assistance:
Silite, Inc., et al., 37172

Energy Department
See Federal Energy Regulatory Commission
NOTICES
Natural gas exportation and importation:
Neste Trading (USA), Inc., et al., 37157

Environmental Protection Agency
RULES
Air quality implementation plans; approval and promulgation; various States:
Illinois, 37100
Hazardous waste:
Coke by-products production, recovery, and refining, 37284
Land disposal restrictions—
Newly identified and listed wastes and contaminated debris, 37194

NOTICES
Agency information collection activities under OMB review, 37158
Meetings:
Dioxin; agency reassessment; workshops, 37158
Municipal solid waste landfills; permit programs; implementation, 37160
Toxic and hazardous substances control:
Premanufacture notices receipts, 37161
Transportation and air quality planning guidelines; availability, 37162
Water pollution control:
National pollutant discharge elimination system; State programs—
Iowa, 37162

Export Administration Bureau
NOTICES
Export privileges, actions affecting:
Cording, Karl, et al., 37146

Federal Aviation Administration
RULES
Air traffic operating and flight rules:
High density traffic airports; air carrier and commuter operator slots, allocation and transfer methods, 37308
PROPOSED RULES
Airworthiness directives:
Piper Aircraft Corp., 37118

Federal Communications Commission
RULES
Common carrier services:
Operator service providers; reconsideration petitions denied, 37106
Public mobile services—
Flexible allocation of frequencies, 37105
NOTICES
Agency information collection activities under OMB review, 37164
Interactive video and data service; application filing procedures, 37164
Public safety radio communications plans:
Georgia, 37165
Rulemaking proceedings; petitions filed, granted, denied, etc., 37165

Federal Energy Regulatory Commission
NOTICES
Electric rate, small power production, and interlocking directorate filings, etc.:
Potomac Electric Power Co. et al., 37152
Environmental statements; availability, etc.:
American Hydro Power Co., 37154
Applications, hearings, determinations, etc.:
Arkla Energy Resources, 37154
Carnegie Natural Gas Co., 37155
CNG Transmission Corp., 37155
Consolidated Hydro Maine, Inc., 37155
Distrigas of Massachusetts Corp., 37155
El Paso Natural Gas Co., 37156
Florida Gas Transmission Co., 37156
National Fuel Gas Supply Corp., 37156
Southern Natural Gas Co., 37156
Viking Gas Transmission Co., 37157

Federal Highway Administration
PROPOSED RULES
Motor carrier safety standards:
Zero-base review of regulations; public outreach sessions, 37392
NOTICES
Environmental statements; notice of intent:
Dodge and Steele Counties, MN; correction, 37186

Federal Reserve System
PROPOSED RULES
Securities credit transactions; credit by brokers and dealers (Regulation T), 37109
NOTICES
Meetings; Sunshine Act, 37187

Financial Management Service
See Fiscal Service

Fiscal Service
PROPOSED RULES
Payment on account of deposits in the Postal Savings System, 37139

Food and Drug Administration
RULES
Animal drugs, feeds, and related products:
Removal of obsolete regulations and recodification, 37318
PROPOSED RULES
Food for human consumption:
Food labeling—
Nutrition label format; correction, 37190

Forest Service
NOTICES
Environmental statements; availability, etc.:
Tongass National Forest, AK, 37145

General Services Administration
NOTICES
Federal Acquisition Regulation (FAR):
Agency information collection activities under OMB review, 37149

Health and Human Services Department
See Agency for Toxic Substances and Disease Registry
See Alcohol, Drug Abuse, and Mental Health Administration
See Children and Families Administration
See Food and Drug Administration
See Health Resources and Services Administration
See National Institutes of Health

Health Resources and Services Administration
NOTICES
Grants and cooperative agreements; availability, etc.:
Community and migrant health center activities, 37167

Housing and Urban Development Department
RULES
Mortgage Review Board; civil money penalties against mortgagees and lenders
Correction, 37085
Public and Indian housing:
Indian housing; consolidated program regulations revision
Correction, 37085
PROPOSED RULES
Mortgage and loan insurance programs:
Multifamily projects; operating loss loan program expansion, 37119

Interior Department
See Land Management Bureau
See National Park Service
See Surface Mining Reclamation and Enforcement Office

Internal Revenue Service
RULES
Income taxes:
Partnership liabilities, treatment; allocations attributable to nonrecourse liabilities; correction, 37189
Resident alien; definition
Correction, 37189
Procedure and administration:
Tax return information for quality or peer review; disclosure, 37085

International Trade Administration
NOTICES
Steel products from various countries; proposed combined records, 37147

International Trade Commission
NOTICES
Meetings; Sunshine Act, 37187

Interstate Commerce Commission
NOTICES
Railroad operation, acquisition, construction, etc.:
Monongahela Connecting Railroad Co., 37170

Justice Department
See Antitrust Division
NOTICES
Agency information collection activities under OMB review, 37170
Pollution control; consent judgments:
Colbert, Jack, et al., 37171

Labor Department
See Employment and Training Administration
See Occupational Safety and Health Administration
NOTICES
Meetings:
Trade Negotiations and Trade Policy Labor Advisory Committee, 37171

Land Management Bureau
NOTICES
Environmental statements; availability, etc.:
Mulligan Draw Gas Field Project, WY, 37168
Meetings:
Miles City District Advisory Council, 37168
Opening of public lands:
Montana, 37168
Recreational management restrictions, etc.:
Ash Springs area, CA; overnight camping restrictions et al., 37169

National Aeronautics and Space Administration
NOTICES
Federal Acquisition Regulation (FAR):
Agency information collection activities under OMB review, 37149

National Commission on America's Urban Families
NOTICES
Meetings, 37173

National Institutes of Health
NOTICES
Meetings:
National Heart, Lung, and Blood Institute, 37167

National Oceanic and Atmospheric Administration
NOTICES
Meetings:
Florida Keys National Marine Sanctuary Advisory Council, 37148

National Park Service
NOTICES
National Register of Historic Places:
Pending nominations, 37169

National Science Foundation
NOTICES
Grants and cooperative agreements; availability, etc.:
Presidential Faculty Fellows Program, 37173

National Space Council
NOTICES
Meetings, 37175

National Transportation Safety Board
NOTICES
Meetings; Sunshine Act, 37187

Navy Department
RULES
Privacy Act; implementation, 37100

Nuclear Regulatory Commission
PROPOSED RULES
Acquisition regulations:
Organizational conflicts of interest, 37140
NOTICES
Meetings:
Reactor Safeguards Advisory Committee, 37175
Meetings; Sunshine Act, 37187
Applications, hearings, determinations, etc.:
Texas Utilities Electric Co., 37175

Occupational Safety and Health Administration
PROPOSED RULES
Safety and health standards, etc.:
Air contaminants, 37126

Occupational Safety and Health Review Commission
NOTICES
Meetings; Sunshine Act, 37188

Personnel Management Office
NOTICES
Meetings:
Federal Salary Council, 37176

Public Health Service
See Agency for Toxic Substances and Disease Registry
See Alcohol, Drug Abuse, and Mental Health Administration
See Food and Drug Administration
See Health Resources and Services Administration
See National Institutes of Health

Securities and Exchange Commission
RULES
Securities:
Reporting and recordkeeping requirements; Form F-6; correction, 37084
NOTICES
Agency information collection activities under OMB review, 37176
Meetings; Sunshine Act, 37188
Self-regulatory organizations; proposed rule changes:
Chicago Board Options Exchange, Inc., 37176
National Association of Securities Dealers, Inc., 37178
Pacific Stock Exchange, Inc., 37179
Self-regulatory organizations; unlisted trading privileges:
Boston Stock Exchange, Inc., 37180
Midwest Stock Exchange, Inc., 37181
Pacific Stock Exchange, Inc., 37181
Philadelphia Stock Exchange, Inc., 37181
Applications, hearings, determinations, etc.:
Manufacturers Life Insurance Company of America et al., 37182

State Department
NOTICES
International traffic in arms regulations; statutory debarment, 37184
Meetings:
International Radio Consultative Committee et al., 37185
International Telegraph and Telephone Consultative Committee, 37185

Surface Mining Reclamation and Enforcement Office
RULES
Permanent program and abandoned mine land reclamation plan submissions:
Kentucky, 37086
Ohio, 37093, 37096
PROPOSED RULES
Permanent program and abandoned mine land reclamation plan submissions:
Illinois, 37127
Kansas, 37132
Maryland, 37133, 37134
Ohio, 37136, 37138

Textile Agreements Implementation Committee
See Committee for the Implementation of Textile Agreements

Thrift Supervision Office
RULES
Savings associations:
Branch offices, exclusive leases, and similar agreements, 37083
PROPOSED RULES
Savings associations:
Incorporation, organization, and conversion of stock associations, 37112

Toxic Substances and Disease Registry Agency
See Agency for Toxic Substances and Disease Registry

Transportation Department
See Federal Aviation Administration
See Federal Highway Administration

Treasury Department
See Fiscal Service
See Internal Revenue Service
See Thrift Supervision Office
NOTICES
Boycotts, international:
Countries requiring cooperation; list, 37186

Separate Parts In This Issue

Part II
Environmental Protection Agency, 37194

Part III
Environmental Protection Agency, 37284

Part IV
Department of Transportation, Federal Aviation Administration, 37308

Part V
Department of Health and Human Services, Food and Drug Administration, 37318

Part VI
Department of Education, 37338

Part VII
Department of Education, 37360

Part VIII
Department of Health and Human Services, Agency for Toxic Substances and Disease Registry, 37382

Part IX
Department of Transportation, Federal Highway Administration, 37392

Reader Aids
Additional information, including a list of public laws, telephone numbers, and finding aids, appears in the Reader Aids section at the end of this issue.

CFR PARTS AFFECTED IN THIS ISSUE

A cumulative list of the parts affected this month can be found in the Reader Aids section at the end of this issue.

7 CFR
302 37079

9 CFR
78 (2 documents) 37080, 37081
94 37081

12 CFR
545 37083
571 37083

Proposed Rules:
220 37109
552 37112
563 37112

14 CFR
93 37308

Proposed Rules:
39 37118

17 CFR
239 37084

21 CFR
520 37318
522 37318
524 37318
526 37318
529 37318
536 37318
539 37318
540 37318
544 37318
546 37318
548 37318
555 37318

Proposed Rules:
101 37190

24 CFR
25 37085
202 37085
905 37085

Proposed Rules:
207 37119
213 37119
220 37119
221 37119
231 37119
232 37119
234 37119
242 37119
244 37119

26 CFR
1 37189
301 (2 documents) 37085, 37189

29 CFR

Proposed Rules:
1910 37126
1915 37126
1917 37126
1918 37126
1926 37126
1928 37126

30 CFR
917 37086
935 (2 documents) 37093, 37096

Proposed Rules:
913 37127
916 37132
920 (2 documents) 37133, 37134
935 (2 documents) 37136, 37138

31 CFR

Proposed Rules:
257 37139

32 CFR
701 37100

40 CFR
52 37100
148 37194
260 37194
261 (2 documents) 37194, 37284
262 37194
264 37194
265 37194
268 37194
270 37194
271 (2 documents) 37194, 37284
302 37284

47 CFR
22 37105
64 37106

48 CFR

Proposed Rules:
Ch. 20 37140
5446 37142
5452 37142

49 CFR

Proposed Rules:
Ch. III 37392

Rules and Regulations

Federal Register
Vol. 57, No. 160
Tuesday, August 18, 1992

This section of the FEDERAL REGISTER contains regulatory documents having general applicability and legal effect, most of which are keyed to and codified in the Code of Federal Regulations, which is published under 50 titles pursuant to 44 U.S.C. 1510.
The Code of Federal Regulations is sold by the Superintendent of Documents. Prices of new books are listed in the first FEDERAL REGISTER issue of each week.

DEPARTMENT OF AGRICULTURE

Animal and Plant Health Inspection Service

7 CFR Part 302

[Docket No. 88-202-2]

District of Columbia; Movement of Plants and Plant Products

AGENCY: Animal and Plant Health Inspection Service, USDA.

ACTION: Final rule.

SUMMARY: We are removing the regulations concerning movement of plants and plant products into and out of the District of Columbia from the Code of Federal Regulations.

We have determined that this action is warranted because these regulations specifically pertaining to the District of Columbia are duplicative of, or exceed the requirements of, other Federal regulations that restrict the movement of plants and plant products into and from other jurisdictions in the United States, including the District of Columbia. We believe that the restrictions imposed by the other existing Federal regulations are adequate to prevent the introduction and interstate spread of plant pests that present a significant threat to U.S. agriculture. This action will remove inspection and certification requirements that are unnecessary.

The Animal and Plant Health Inspection Service will continue to provide inspection and documentation services for plants and plant products moving from the District of Columbia when inspection or documentation is required by Federal laws or regulations or, when applicable, by the laws or regulations of countries that receive plants or plant products from the District of Columbia.

EFFECTIVE DATE: September 17, 1992.

FOR FURTHER INFORMATION CONTACT: Mr. Sidney Cousins, Domestic and Emergency Operations, PPQ, APHIS, USDA, room 644, Federal Building, 6505 Belcrest Road, Hyattsville, MD 20782, (301) 436-6365.

SUPPLEMENTARY INFORMATION:

Background

On September 28, 1988, we published in the **Federal Register** (53 FR 37772–37774, Docket No. 85-368), a document proposing to revise the regulations in 7 CFR part 302, "District of Columbia; Movement of Plants and Plant Products." The intent of the proposed revisions was to remove unnecessary restrictions on the interstate movement of plants and plant products and to clarify the regulations, which have been in effect since 1959, for persons who must comply with them.

Our proposal invited the submission of written comments, due on or before November 28, 1988. We received two comments prior to this closing date, both from State departments of agriculture bordering the District, and both objecting to the proposal as written. In response to these comments, and as a result of further agency review, we withdrew Docket No. 85-368 in a document published in the April 24, 1992, **Federal Register** (57 FR 15033–15034, Docket No. 88-202), and proposed to remove 7 CFR part 302 in its entirety. Comments on the April 24, proposed rule were required to be received on or before June 23, 1992. We did not receive any comments. Therefore, we are removing 7 CFR part 302 in its entirety.

We continue to believe that other existing Federal regulations are adequate to prevent the introduction and interstate spread of plant pests that present a significant threat to U.S. agriculture. Maintaining special regulations pertaining specifically to plants and plant products moved into or from the District of Columbia is not necessary. These regulations are duplicative of, or exceed the requirements of, other Federal regulations that restrict the movement of plants and plant products into and from other jurisdictions in the United States, including the District of Columbia. By removing the requirements mandating inspection and certification of plants and plant products entering or leaving the District of Columbia, we eliminate the need for 7 CFR part 302.

Based on the rationale set forth in the proposal and in this document, we are withdrawing 7 CFR part 302.

Executive Order 12291 and Regulatory Flexibility Act

We are issuing this rule in conformance with Executive Order 12291, and we have determined that it is not a "major rule". Based on information compiled by the Department, we have determined that this rule will have an effect on the economy of less than $100 million; will not cause a major increase in costs or prices for consumers, individual industries, Federal, State, or local government agencies, or geographic regions; and will not cause a significant adverse effect on competition, employment, investment, productivity, innovation, or on the ability of United States-based enterprises to compete with foreign-based enterprises in domestic or export markets.

Removing the "District of Columbia; Movement of Plants and Plant Products" regulations will relieve inspectors of the requirement to perform inspections and issue documents that are not necessary for the protection of agriculture from plant pests or diseases.

However, removing these regulations will not increase or decrease trade movements or sales since inspection and documentation to meet other Federal regulations, as well as applicable foreign country laws and regulations, will continue to be provided. APHIS will continue to provide inspectors as needed to meet these other regulations, since the District of Columbia does not employ such inspectors. There are fewer than ten small entities that move plants into an out of the District of Columbia. Because the volume of plants moving into and out of the District is so small, there will be no significant economic impact created by the removal of the unnecessary requirements.

Under these circumstances, the Administrator of the Animal and Plant Health Inspection Service has determined that this action will not have a significant economic impact on a substantial number of small entities.

Executive Order 12372

This program/activity is listed in the Catalog of Federal Domestic Assistance under No. 10.025 and is subject to

Executive Order 12372, which requires intergovernmental consultation with State and local officials. (See 7 CFR part 3015, subpart V.)

Executive Order 12778

This rule has been reviewed under Executive Order 12778, Civil Justice Reform. This rule: (1) Preempts all State and local laws and regulations that are in conflict with this rule; (2) has no retroactive effect; and (3) does not require administrative proceedings before parties may file suit in court challenging this rule.

Paperwork Reduction Act

This rule contains no information collection or recordkeeping requirements under the Paperwork Reduction Act of 1980 (44 U.S.C. 3501 *et seq.*).

List of Subjects in 7 CFR Part 302

District of Columbia, Nursery stock, Plant diseases and pests, Quarantine, Transportation.

PART 302—[REMOVED]

Under the authority of the Federal Plant Pest Act (7 U.S.C. 150aa–150jj) and the Plant Quarantine Act of 1912, as amended (7 U.S.C. 151–165, and 167), title 7, Code of Federal Regulations is amended by removing "PART 302—DISTRICT OF COLUMBIA; MOVEMENT OF PLANTS AND PLANT PRODUCTS."

Done in Washington, DC, this 12th day of August 1992.

Robert Melland,

Administrator, Animal and Plant Health Inspection Service.

[FR Doc. 92–19583 Filed 8–17–92; 8:45 am]

BILLING CODE 3410-34-M

---

9 CFR Part 78

[Docket No. 92-009-2]

Brucellosis in Cattle; State and Area Classifications

AGENCY: Animal and Plant Health Inspection Service, USDA.

ACTION: Affirmation of interim rule.

SUMMARY: We are affirming without change an interim rule that amended the brucellosis regulations concerning the interstate movement of cattle by changing the classification of Florida from Class B to Class A. We have determined that Florida meets the standards for Class A status. This action was necessary to relieve certain restrictions on the interstate movement of cattle from Florida.

EFFECTIVE DATES: September 17, 1992.

FOR FURTHER INFORMATION CONTACT: Dr. John Kopec, Senior Staff Veterinarian, Cattle Diseases and Surveillance Staff, VS, APHIS, USDA, room 729, Federal Building, 6505 Belcrest Road, Hyattsville, MD 20782, (301) 436–6188.

SUPPLEMENTARY INFORMATION:

Background

In an interim rule effective April 21, 1992, and published in the **Federal Register** on April 27, 1992 (57 FR 15219–15220, Docket No. 92–009), we amended the brucellosis regulations in 9 CFR part 78 by removing Florida from the list of Class B States § 78.41(c) and adding it to the list of Class A States in § 78.41(b). This action relieved certain restrictions on moving cattle interstate from Florida.

Comments on the interim rule were required to be received on or before June 26, 1992. We did not receive any comments. The facts presented in the interim rule still provide a basis for the rule.

Executive Order 12291 and Regulatory Flexibility Act

We are issuing this rule in conformance with Executive Order 12291, and we have determined that it is not a "major rule." Based on information complied by the Department, we have determined that this rule will have an effect on the economy of less than $100 million; will not cause a major increase in costs or prices for consumers, individual industries, Federal, State, or local government agencies, or geographic regions; and will not cause a significant adverse effect on competition, employment, investment, productivity, innovation, or on the ability of United States-based enterprises to compete with foreign-based enterprises in domestic or export markets.

For this action, the Office of Management and Budget has waived the review process required by Executive Order 12291.

Cattle moved interstate are moved for slaughter, for use as breeding stock, or for feeding. Changing the status of Florida from Class B to Class A will promote economic growth by reducing certain testing and other requirements governing the interstate movement of cattle from Florida. However, cattle from certified brucellosis-free herds moving interstate are not affected by this change.

The principal entities affected by the rule are owners of noncertified herds in Florida not known to be affected with brucellosis who seek to sell cattle interstate.

There are an estimated 21,300 herds in Florida that could potentially be affected by this rule change. We estimate that 98 percent of these herds are owned by small entities. During fiscal year 1991, Florida tested 58,348 eligible cattle at livestock markets. We estimate that approximately 10 percent of this testing was done to qualify cattle for interstate movement for purposes other than slaughter. Testing costs approximately $4 per head. Since herd sizes vary, larger herds will accumulate more savings than small herds. Also, not all herd owners will choose to market their cattle in a way that accrues these costs savings. Overall, the rule should provide a very small economic benefit to small entities.

Under these circumstances, the Animal and Plant Health Inspection Service has determined that this action will not have a significant economic impact on a substantial number of small entities.

Executive Order 12372

This program/activity is listed in the Catalog of Federal Domestic Assistance under No. 10.025 and is subject to Executive Order 12372, which requires intergovernmental consultation with State and local officials. (See 7 CFR part 3015, subpart V.)

Executive Order 12778

This rule has been reviewed under Executive Order 12778, Civil Justice Reform. This rule: (1) Preempts all State and local laws and regulations that are in conflict with this rule; (2) has no retroactive effect; and (3) does not require administrative proceedings before parties may file suit in court challenging its provisions.

Paperwork Reduction Act

This rule contains no new information collection or recordkeeping requirements under the Paperwork Reduction Act of 1980 (44 U.S.C. 3501 *et seq.*).

List of Subjects in 9 CFR Part 78

Animal diseases, Brucellosis, Cattle, Hogs, Quarantine, Transportation.

PART 78—BRUCELLOSIS

Accordingly, we are adopting as a final rule, without change, the interim rule amending 9 CFR 78.41 that was published at 57 FR 15219–15220 on April 27, 1992.

Authority: 21 U.S.C. 111–114a-l, 114g, 115, 117, 120, 121, 123–126, 134b, 134f; 7 CFR 2.17, 2.51, and 371.2(d).

Done in Washington, DC this 12th day of August 1992.

Robert Melland,

Administator, Animal and Plant Health Inspection Service.

[FR Doc. 92-19581 Filed 8-17-92; 8:45 am]

BILLING CODE 3410-34-M

---

9 CFR Part 78

[Docket No. 92-005-2]

Brucellosis in Cattle; State and Area Classifications

AGENCY: Animal and Plant Health Inspection Service, USDA.

ACTION: Affirmation of interim rule.

SUMMARY: We are affirming without change an interim rule that amended the brucellosis regulations concerning the interstate movement of cattle by changing the classification of Mississippi from Class B to Class A. We have determined that Mississippi meets the standards for Class A status. This action was necessary to relieve certain restrictions on the interstate movement of cattle from Mississippi.

EFFECTIVE DATE: September 17, 1992.

FOR FURTHER INFORMATION CONTACT: Dr. John Kopec, Senior Staff Veterinarian, Cattle Diseases and Surveillance Staff, VS, APHIS, USDA, room 729, Federal Building, 6505 Belcrest Road, Hyattsville, MD 20782, (301) 436-6188.

SUPPLEMENTARY INFORMATION:

Background

In an interim rule effective January 27, 1992, and published in the **Federal Register** on January 31, 1992 (57 FR 3717-3719, Docket No. 92-005), we amended the brucellosis regulations in 9 CFR part 78 by removing Mississippi from the list of Class B States in § 78.41(c) and adding it to the list of Class A States in § 78.41(b). The action relieved certain restrictions on moving cattle interstate from Mississippi.

Comments on the interim rule were required to be received on or before March 31, 1992. We did not receive any comments. The facts presented in the interim rule still provide a basis for the rule.

Executive Order 12291 and Regulatory Flexibility Act

We are issuing this rule in conformance with Executive Order 12291, and we have determined that it is not a "major rule." Based on information compiled by the Department, we have determined that this rule will have an effect on the economy of less than $100 million; will not cause a major increase in costs or prices for consumers, individual industries, Federal, State, or local government agencies, or geographic regions; and will not cause a significant adverse effect on competition, employment, investment, productivity, innovation, or on the ability of United States-based enterprises to compete with foreign-based enterprises in domestic or export markets.

For this action, the Office of Management and Budget has waived the review process required by Executive Order 12291.

Cattle moved interstate are moved for slaughter, for use as breeding stock, or for feeding. Changing the status of Mississippi from Class B to Class A reduces certain testing and other requirements governing the interstate movement of cattle from Mississippi. However, cattle from certified brucellosis-free herds moving interstate are not affected by this change.

The principal entities affected by the rule are owners of noncertified herds in Mississippi not known to be affected with brucellosis who seek to sell cattle interstate.

There are an estimated 27,000 herds in Mississippi that could potentially be affected by this rule change. We estimate that 98 percent of these herds are owned by small entities. During fiscal year 1991, Mississippi tested 168,967 eligible cattle at livestock markets. We estimate that approximately 5 percent of this testing was done to qualify cattle for interstate movement for purposes other than slaughter. Testing costs approximately $1.50 per head. Since herd sizes vary, larger herds will accumulate more savings than small herds. Also, not all herd owners will choose to market their cattle in a way that accrues these cost savings. Overall, the rule should provide a very small economic benefit to small entities.

Under these circumstances, the Animal and Plant Health Inspection Service has determined that this action will not have a significant economic impact on a substantial number of small entities.

Executive Order 12372

This program/activity is listed in the Catalog of Federal Domestic Assistance under No. 10.025 and is subject to Executive Order 12372, which requires intergovernmental consultation with State and local officials. (See 7 CFR part 3015, subpart V.)

Executive Order 12778

This rule has been reviewed under Executive Order 12778, Civil Justice Reform. This rule: (1) Preempts all State and local laws and regulations that are in conflict with this rule; (2) has no retroactive effect; and (3) does not require administrative proceedings before parties may file suit in court challenging its provisions.

Paperwork Reduction Act

This rule contains no new information collection or recordkeeping requirements under the Paperwork Reduction Act of 1980 (44 U.S.C. 3501 *et. seq.*).

List of Subjects in 9 CFR Part 78

Animal diseases, Brucellosis, Cattle, Hogs, Quarantine, Transportation.

PART 78—BRUCELLOSIS

Accordingly, we are adopting as a final rule, without change, the interim rule amending 9 CFR 78.41 that was published at 57 FR 3717-3719 on January 31, 1992.

Authority: 21 U.S.C. 111-114a-l, 114g, 115, 117, 120, 121, 123-126, 134b, 134f; 7 CFR 2.17, 2.51, and 371.2(d).

Done in Washington, DC, this 12th day of August 1992.

Robert Melland,

Administrator, Animal and Plant Health Inspection Service.

[FR Doc. 92-19582 Filed 8-17-92; 8:45 am]

BILLING CODE 3410-34-M

---

9 CFR Part 94

[Docket No. 92-031-1]

Meat and Meat Products From Northern Ireland and the Republic of Ireland; Restrictions on Importations

AGENCY: Animal and Plant Health Inspection Service, USDA.

ACTION: Interim rule and request for comments.

SUMMARY: We are amending the regulations to add certain restrictions concerning the importation into the United States of meat of ruminants and swine, and certain other animal products, from Northern Ireland and the Republic of Ireland. The imposition of additional import restrictions is a necessary response to new conditions which make possible the commingling of disease-contaminated meat or meat products with disease-free meat or meat products in these countries. In Northern Ireland, conditions have changed with respect to swine vesicular disease-

contamination of meat or meat products only. This action protects against the introduction into the United States of swine vesicular disease, rinderpest, and foot-and-mouth disease.

DATES: Interim rule effective August 18, 1992. Consideration will be given only to comments received on or before October 19, 1992.

ADDRESSES: To help ensure that your written comments are considered, send an original and three copies to Chief, Regulatory Analysis and Development, PPD, APHIS, USDA, room 804, Federal Building, 6505 Belcrest Road, Hyattsville, MD 20782. Please state that your comments refer to Docket No. 92-031-1. Comments received may be inspected at USDA, room 1141, South Building, 14th Street and Independence Avenue, SW., Washington, DC, between 8 a.m. and 4:30 p.m., Monday through Friday, except holidays.

FOR FURTHER INFORMATION CONTACT: Dr. Harvey A. Kryder, Chief Staff Veterinarian, Import-Export Products Staff, VS, APHIS, USDA, room 756-A, Federal Building, 6505 Belcrest Road, Hyattsville, MD 20782, 301-436-7885.

SUPPLEMENTARY INFORMATION:

Background

The regulations in 9 CFR part 94 (referred to below as the regulations) govern the importation into the United States of specified animals and animal products in order to prevent the introduction of various diseases, including rinderpest, foot-and-mouth disease (FMD), and swine vesicular disease (SVD). These are dangerous and destructive communicable diseases of ruminants and swine.

Both the Republic of Ireland (also referred to in the regulations as Ireland) and Northern Ireland are included in the list of countries declared, in § 94.1(a)(2) of the regulations, to be free of rinderpest and FMD. Both countries also appear in the list of countries declared free of swine vesicular disease, in § 94.12(a). We are now adding the Republic of Ireland to the list of countries in § 94.11 that, although free of rinderpest and FMD, are subject to special restrictions on the importation into the United States of their ruminant and swine meat and meat products. That list already includes Northern Ireland. We are also adding Northern Ireland and the Republic of Ireland to the list of countries in § 94.13 that, although free of SVD, are subject to the same kind of special restrictions.

The regulations in §§ 94.11 and 94.13 provide that countries free of rinderpest and FMD, in the first case, and of SVD, in the second, are, under certain circumstances, subject to special restrictions on the importation into the United States of their ruminant and swine meat and meat products.

Special Restrictions

The countries listed in §§ 94.11 and 94.13(a) are subject to special restrictions because at least one of the following conditions applies:

(1) They supplement their national meat supply by importing fresh, chilled, or frozen meat from countries in which one of the diseases of concern is considered to exist;

(2) They have a common land border with countries in which one of these diseases exists; or

(3) They import ruminants or swine from countries in which one of these diseases exists, under conditions that are less restrictive than would be acceptable for importation into the United States.

The special restrictions placed on meat and other animal products of ruminants and swine in §§ 94.11 and 94.13 generally require that the meat be:

(1) Cooked in the manner specified;

(2) Prepared in an inspected establishment that is eligible to have its products imported into the United States under the Federal Meat Inspection Act; and

(3) Accompanied by a certificate issued by an official of the national government of the country of origin, assuring that the meat and meat products therefrom have not been commingled or exposed to meat or other animal products imported from or transported through a rinderpest-, FMD-, or SVD-infected country, and are otherwise handled in accordance with the requirements of this section.

As members of the European Community, in preparation for the "border-free Europe" of July 1, 1992, Northern Ireland and the Republic of Ireland are in the process of changing their import requirements, and will have to accept meat and animal products from all countries within the European Community, regardless of rinderpest-, FMD-, or SVD-status. These altered trade conditions mean that the meat and other animal products produced in Northern Ireland and the Republic of Ireland may be commingled with the fresh, chilled, or frozen meat of animals from a country or countries where one of the diseases of concern exists, presenting a risk that meat and other animal products exported from either country to the United States could be contaminated and introduce SVD, rinderpest or FMD.

We are, therefore, taking this action to further restrict the importation of meat and meat products from Northern Ireland, in accordance with § 94.13, and to restrict the importation of meat and meat products from the Republic of Ireland in accordance with §§ 94.11 and 94.13.

Emergency Action

The Administrator of the Animal and Plant Health Inspection Service has determined that there is good cause for publishing this interim rule without prior opportunity for public comment. Immediate action is necessary to respond to changes in the animal health regulations of Northern Ireland and the Republic of Ireland. Those changes take effect July 1, 1992. Less restrictive meat and meat product import requirements in the two countries mean that the commingling of rinderpest-, FMD-, or SVD-contaminated meat and meat products with rinderpest-, FMD-, or SVD-free products could occur in either country.

Failure to restrict the importation of meat and meat products at this time increases the risk of rinderpest-, FMD-, or SVD-contaminated meat or meat products being introduced into the United States.

Since prior notice and other public procedures with respect to this interim rule as impracticable and contrary to the public interest under these conditions, there is a good cause under 5 U.S.C. 553 for making it effective upon publication in the **Federal Register**. We will consider comments that are received within 60 days of publication of this interim rule in the **Federal Register**. After the comment period closes, we will publish another document in the **Federal Register**. It will include discussion of any comments we receive and any amendments we are making to the rule as a result of the comments.

Executive Order 12291 and Regulatory Flexibility Act

We are issuing this rule in conformance with Executive Order 12291, and we have determined that it is not a "major rule." Based on information compiled by the Department, we have determined that this rule will have an effect on the economy of less than $100 million; will not cause a major increase in costs or prices for consumers, individual industries, Federal, State, or local government agencies, or geographic regions; and will not cause a significant adverse effect on competition, employment, investment, productivity, innovation, or on the ability of United States-based enterprises to compete with foreign-

based enterprises in domestic or export markets.

The amount of beef and pork imported from both Northern Ireland and the Republic of Ireland into the United States has been minimal in recent years. Official records indicate that no commercial shipments of pork have been imported from Northern Ireland since 1989. No meat product of ruminants, other than beef, has been imported from the Republic of Ireland since 1988. In 1987–88, the most recent year for which figures are available, the value of beef imported from the Republic of Ireland was $1,855,000; the value of pork was less than $10,000. This small volume suggests that few beef and pork importers will be affected by this rule. Moreover, officials in the Republic of Ireland indicate that they will be able to issue the certificates required under the regulations in 9 CFR part 94, for meat and meat products shipped from the Republic of Ireland to the United States. The few importers affected by the new regulations can continue to import meat and other animal products from the Republic of Ireland, subject to the added restrictions. Alternatively, they can purchase those products from other sources.

Under these circumstances, the Administrator of the Animal and Plant Health Inspection Service has determined that this action will not have a significant economic impact on a substantial number of small entities.

Executive Order 12372

Thie program/activity is listed in the Catalog of Federal Domestic Assistance under No. 10.025 and is subject to Executive Order 12372, which requires intergovernmental consultation with State and local officials. (See 7 CFR, part 3015, subpart V.)

Executive Order 12778

This interim rule has been reviewed under Executive Order 12778, Civil Justice Reform. This rule: (1) Preempts all State and local laws and regulations that are in conflict with this rule; (2) has no retroactive effect; and (3) does not require administrative proceedings before parties may file suit in court challenging its provisions.

Paperwork Reduction Act

The information collection and recordkeeping requirements contained in §§ 94.11 and 94.13 have been approved by the Office of Management and Budget (OMB) under the Paperwork Reduction Act of 1980 (44 U.S.C. 3501 *et seq.*) under OMB control number 0579–0015.

List of Subjects in 9 CFR Part 94

African swine fever, Animal disease, Exotic Newcastle disease, Foot-and-mouth disease, Fowl pest, Garbage, Hog cholera, Imports, Livestock and livestock products, Meat and meat products, Milk, Poultry and poultry products, Rinderpest, Swine vesicular disease.

Accordingly, the regulations in 9 CFR part 94 are amended as follows:

PART 94—RINDERPEST, FOOT-AND-MOUTH DISEASE, FOWL PEST (FOWL PLAGUE), NEWCASTLE DISEASE (AVIAN PNEUMOENCEPHALITIS), AFRICAN SWINE FEVER, HOG CHOLERA, AND BOVINE SPONGIFORM ENCEPHALOPATHY: PROHIBITED AND RESTRICTED IMPORTATIONS

1. The heading for part 94 is revised as set forth above.

2. The authority citation for part 94 continues to read as follows:

Authority: 7 U.S.C. 147a, 150ee, 161, 162, 450, 19 U.S.C. 1306; 21 U.S.C. 111, 114a, 134a, 134b, 134c, and 134f; 31 U.S.C. 9701; 42 U.S.C. 4331, 4332; 7 CFR 2.17, 2.51, and 371.2(d).

§ 94.11 [Amended]

3. In § 94.11, paragraph (a) is amended by adding "Republic of Ireland," immediately after "New Guinea,".

§ 94.13 [Amended]

4. In § 94.13, the introductory text is amended by adding "Northern Ireland, Republic of Ireland," immediately after "Luxembourg,".

Done in Washington, DC, this 12th day of August 1992.

Robert Melland,

Administrator, Animal and Plant Health Inspection Service.

[FR Doc. 92–19584 Filed 8–17–92; 8:45 am]

BILLING CODE 3410–34–M

DEPARTMENT OF TREASURY

Office of Thrift Supervision

12 CFR Parts 545 and 571

[No. 92–265]

RIN 1550–AA48

Branch Offices, Exclusive Leases, and Similar Agreements

AGENCY: Office of Thrift Supervision, Treasury.

ACTION: Final rule.

SUMMARY: The Office of Thrift Supervision (OTS) is repealing certain of its regulations because they are unnecessary and obsolete. These regulations prohibited savings associations from entering into leases and other arrangements that would give an association the exclusive right to occupy the premises of a chain store or regional shopping center. The regulations were adopted by the OTS's predecessor agency, the Federal Home Loan Bank Board (Bank Board) because exclusive lease arrangements were considered a potentially unsafe or unsound practice for savings associations due to their anti-competitive nature. However, the OTS believes these regulations are unnecessary because existing Federal and state laws addressing anti-competitive behavior are sufficient to address potential abuses that may arise in this area.

EFFECTIVE DATE: August 18, 1992.

FOR FURTHER INFORMATION CONTACT: Eileen M. McCarthy, Policy Analyst, Supervision Policy, (202) 906–5652, or Michael P. Vallely, Senior Attorney, Corporate and Securities Division, (202) 906–6241, Office of Thrift Supervision, 1700 G Street, NW., Washington, DC 20552.

SUPPLEMENTARY INFORMATION: On July 15, 1972, the Bank Board adopted a rule currently at 12 CFR 545.92(i), to prohibit federal savings associations from entering into any agreement that would result in the exclusive right to operate a branch office in a regional shopping center or in a majority of all locations of a chain store, or that would exclude other financial institutions from operating offices in a regional shopping center or any location of a chain store where the association does not have an office.[1] On February 20, 1976, the Bank Board adopted another rule, currently at 12 CFR 571.11, expressing a policy of prohibiting any leasing or other arrangements under which a savings association could prevent competing financial institutions from occupying office space in a regional shopping center.[2]

These two regulations were adopted by the Bank Board because it believed that exclusive lease agreements were anti-competitive and would expose associations to substantial liability under the antitrust laws, with attendant risk to the deposit insurance fund. Like other restrictive covenants, exclusive lease provisions may involve unreasonable restraints of trade under section 1 of the Sherman Act, 15 U.S.C. 1, attempts to monopolize under section

[1] See 37 FR 13164 (July 4, 1972).

[2] See 41 FR 2805 (January 20, 1976).

2 of the Sherman Act, 15 U.S.C. 2, or unfair methods of competition under section 5 of the Federal Trade Commission Act, 15 U.S.C. 45.

Notice of the OTS's proposal to repeal these regulations was published in the **Federal Register** on April 13, 1992. See 57 FR 12760 (April 13, 1992). The notice solicited public comment for a 30-day period beginning on the date of publication. Upon consideration of all the comments received during the public comment period, the OTS is repealing the regulation, as proposed.

As noted in the proposal, the OTS is aware of no instances where a savings association's lease arrangements were successfully challenged as anti-competitive, or where a lease arrangement otherwise presented significant safety or soundness concerns. Moreover, current Federal and state antitrust laws establish a wide range of administrative and judicial sanctions against, and remedies for, anti-competitive lease arrangements. Thus, the OTS concluded that these provisions are unnecessary and obsolete.

Summary of Comments

The comment period closed May 13, 1992. The OTS received 2 comments on the proposal from trade groups. Both comments favored repeal of these regulations for the reasons set forth in the proposal.

Repeal of §§ 545.92(i) and 571.11

Upon consideration of the public comments, the OTS has determined to repeal 12 CFR 545.92(i) and 571.11 as set forth in the proposal.

Regulatory Flexibility Act

Pursuant to section 605(b) of the Regulatory Flexibility Act, it is certified that this final rule will not have a significant economic impact on a substantial number of small entities. Accordingly, a Regulatory Flexibility Analysis is not required.

Executive Order 12291

The OTS has determined that this final rule does not constitute a "major rule" for purposes of Executive Order 12291 and, therefore, does not require the preparation of a regulatory impact analysis.

List of Subjects

12 CFR Part 545

Accounting, Consumer protection, Credit, Electronic funds transfers, Investments, Manufactured homes, Mortgages, Reporting and recordkeeping requirements, Savings association.

12 CFR Part 571

Accounting, Conflicts of interest, Gold, Investments, Reporting and recordkeeping requirements, Savings associations.

Accordingly, the OTS hereby amends part 545, subchapter C, and part 571, subchapter D, chapter V, title 12, Code of Federal Regulations, as set forth below.

SUBCHAPTER C—REGULATIONS FOR FEDERALS SAVINGS ASSOCIATIONS

PART 545—OPERATIONS

1. The authority citation for part 545 continues to read as follows:

Authority: 12 U.S.C. 1462a, 1463, 1464, 1828.

§ 545.92 [Amended]

2. Section 545.92(i) is removed and reserved

SUBCHAPTER D—REGULATIONS APPLICABLE TO ALL FEDERAL SAVINGS ASSOCIATIONS

PART 571—STATEMENTS OF POLICY

1. The authority citation for part 571 continues to read as follows:

Authority: 5 U.S.C. 552, 559; 12 U.S.C. 1462a, 1463, 1464.

§ 571.11 [Removed]

2. Section 571.11 is removed.

Dated: June 15, 1992.

By the Office of Thrift Supervision.

Timothy Ryan,

Director.

[FR Doc. 92-19367 Filed 8-17-92; 8:45 am]

BILLING CODE 6720-01-M

SECURITIES AND EXCHANGE COMMISSION

17 CFR Part 239

[Release No. 33-6951; File No. S7-32-85]

RIN: 3235-AC64

Technical Amendment to Form F-6

AGENCY: Securities and Exchange Commission.

ACTION: Final rule—technical amendment.

SUMMARY: This document corrects a reference to "Rule 457(j) (§ 230.457(j) of this chapter)" in General Instruction II of Form F-6 which was adopted in a release entitled American Depositary Receipts published Thursday, March 24, 1983 (48 FR 12346).

EFFECTIVE DATE: August 18, 1992.

FOR FURTHER INFORMATION CONTACT: Anita Klein, (202) 272-3246, Office of International Corporate Finance, Division of Corporation Finance, Securities and Exchange Commission, Washington, DC 20549.

SUPPLEMENTARY INFORMATION: When the Commission published Form F-6 in 1983, the reference in General Instruction II. thereof to rule 457(j) under the Securities Act of 1933 was correct. In a subsequent Commission release published Friday, January 17, 1986 (51 FR 2472), however, paragraphs (b)-(m) of Rule 457 were redesignated paragraphs (c)-(n) of Rule 457. No amendment to General Instruction II. of Form F-6 was adopted at that time to correct the reference to Rule 457(j) in accordance with the redesignation. Since the effective date of the redesignation, therefore, Form F-6 has contained an error which may prove to be misleading and is in need of clarification.

List of Subjects in 17 CFR Part 239

Reporting and recordkeeping requirements; Securities.

Accordingly, 17 CFR part 239 is amended as follows.

PART 239—FORMS PRESCRIBED UNDER THE SECURITIES ACT OF 1933

1. The authority citation for part 239 continues to read as follows:

Authority: 15 U.S.C. 77a, *et seq.*, unless otherwise noted.

2. By amending the final sentence of General Instruction II. of Form F-6 (§ 239.36) to read as follows:

§ 239.36 Form F-6, for registration under the Securities Act of 1933 of depositary shares evidenced by American Depositary Receipts.

General Instructions

* * * * *

II. * * *

Rule 457(k) (§ 230.457(k) of this chapter) describes the method of computing the filing fee.

* * * * *

Dated: August 12, 1992.

Margaret H. McFarland,

Deputy Secretary.

[FR Doc. 92-19549 Filed 8-17-92; 8:45 am]

BILLING CODE 8010-01-M

DEPARTMENT OF HOUSING AND URBAN DEVELOPMENT

Office of the Secretary

24 CFR Parts 25 and 202

[Docket No. R-92-1499; FR-2801-C-04]

RIN 2501-AB01

Mortgagee Review Board; Corrections

AGENCY: Office of the Secretary, HUD.

ACTION: Final rule; corrections.

SUMMARY: On July 13, 1992 (57 FR 31048), the Department published in the **Federal Register**, a final rule that made comprehensive changes in the Department of Housing and Urban Development's Mortgagee Review Board (Board) procedures. The purpose of this document is to correct editorial errors that were inadvertently made in the publication of the final rule.

EFFECTIVE DATE: August 12, 1992.

FOR FURTHER INFORMATION CONTACT:

For discussion of legal issues or matters of regulatory interpretation: Emmett N. Roden, III, Assistant General Counsel, Inspector General and Administrative Proceedings Division, Department of Housing and Urban Development, room 10251, 451 Seventh Street, SW., Washington, DC 20410, Telephone (202) 608-3200.

For programmatic issues: William Heyman, Director, Office of Lender Activities and Land Sales Registration, Department of Housing and Urban Development, room 9146, 451 Seventh Street, SW., Washington, DC 20410. Telephone (202) 708-1824. (These are not toll-free numbers.)

SUPPLEMENTARY INFORMATION:

Accordingly, in FR Doc. 92-16200, the final rule published in the **Federal Register** on July 13, 1992 (57 FR 31048), is corrected to read as follows:

1. On page 31048, in the preamble, in the third column, under the title heading *"Discussion of Section 25.2 Establishment of Board"*, in the fourth paragraph under *"Response:"*, capitalize "Title I" wherever it appears.

2. On page 31051, in the preamble, in the first column, under the title heading *"Executive Order 12612, Federalism"*, correct the first sentence to read, "* * * that the policies contained in this rule do not have a substantial direct effect * * *."

§ 25.2 [Corrected]

3. On page 31051, in § 25.2, in the third column, correct by capitalizing the phrase, "Title I".

§ 25.3 [Corrected]

4. On page 31051, in § 25.3, under the definition *"Lender."*, correct by capitalizing the phrase, "Title I", wherever it appears.

5. On page 31052, in § 25.3, under the definition *"Probation"*, correct the first sentence to read, "* * *, while an evaluation is made of the mortgagee's compliance with HUD/FHA requirements, the Equal Credit Opportunity Act (ECOA), (15 U.S.C. 1601), the Fair Housing Act (42 U.S.C. 3601-3619), * * *."

§ 25.4 [Corrected]

6. On page 31052, in § 25.4(b), correct the first sentence to read, "The Inspector General or his or her designee, and the Director of the Office of Lender Activities * * *."

§ 25.5 [Corrected]

7. On page 31052, in § 25.5(b), correct the fourth sentence to read, "* * *, the Equal Credit Opportunity Act, (15 U.S.C. 1601), * * *."

8. On page 31052, in § 25.5(c)(3), correct the first sentence to read, "* * * HUD will not endorse any mortgagee originated by the suspended mortgagor * * *."

9. On page 31053, in § 25.5(d)(3)(i), correct the phrase "withdrawn mortgagor" to read "withdrawn mortgagee".

§ 25.9 [Corrected]

10. On page 31054, in § 25.9(cc), correct by capitalizing "Title I".

§ 25.13 [Corrected]

11. On page 31055, in § 25.13, correct the first sentence by capitalizing "Title I".

§ 202.8 [Corrected]

12. On page 31056, in § 202.8(d), in the second sentence, correct by capitalizing "Title I".

Dated: August 12, 1992.

Grady J. Norris,

Assistant General Counsel for Regulations.

[FR Doc. 92-19586 Filed 8-17-92; 8:45 am]

BILLING CODE 4210-32-M

Office of the Assistant Secretary for Public and Indian Housing

24 CFR Part 905

[Docket No. R-92-1371; FR-2208-C-05]

RIN 2577-AA32

Indian Housing: Revised Consolidated Program Regulations; Corrections

AGENCY: Office of the Assistant Secretary for Public and Indian Housing, HUD.

ACTION: Final rule; corrections.

SUMMARY: On June 24, 1992 (57 FR 28240), the Department published in the **Federal Register**, a final rule that modified slightly an interim rule already in effect that consolidated rules applicable to all aspects of the Indian housing programs administered by Indian Housing Authorities (IHAs). The purpose of this document is to correct typographical errors in the published final rule.

EFFECTIVE DATE: October 1, 1992.

FOR FURTHER INFORMATION CONTACT:

Dominic Nessi, Director, Office of Indian Housing, room 4140, Department of Housing and Urban Development, Washington, DC 20410; telephone (202) 708-1015 (voice), or (202) 708-0850 (TDD). (These are not toll-free numbers.)

SUPPLEMENTARY INFORMATION:

Accordingly, in FR Doc. 92-14057, a final rule published in the **Federal Register** of June 24, 1992 (57 FR 28240), is corrected to read as follows:

§ 905.440 [Corrected]

1. On page 28292, in § 905.440, in the middle column, paragraph "(e)(i)" is corrected to read paragraph "(e)(1)".

§ 905.963 [Corrected]

2. On page 28349, in § 905.963, in the middle column, the section heading is corrected to read, "**§ 905.963 HUD's role in activities under this subpart.**".

Dated: August 12, 1992.

Grady J. Norris,

Assistant General Counsel for Regulations.

[FR Doc. 92-19587 Filed 8-17-92; 8:45 am]

BILLING CODE 4210-33-M

DEPARTMENT OF THE TREASURY

Internal Revenue Service

26 CFR Part 301

[T.D. 8427]

RIN 1545-AQ21

Disclosure of Tax Return Information for Purposes of Quality or Peer Reviews; Amendment

AGENCY: Internal Revenue Service, Treasury.

ACTION: Final regulations.

SUMMARY: This document provides final regulations under section 7216 relating to the circumstances under which tax return information may be disclosed for purposes of conducting quality or peer reviews. The regulations affect tax return preparers and are necessary to

permit tax return information to be disclosed and used for purposes of a quality or peer review of a tax return preparer's accounting or auditing practice.

EFFECTIVE DATE: These regulations are effective December 28, 1990.

FOR FURTHER INFORMATION CONTACT: David L. Meyer, Office of the Assistant Chief Counsel (Income Tax and Accounting), Internal Revenue Service, 1111 Constitution Avenue, NW., Washington, DC 20224 (Attention: CC:CORP:T:R), or by telephone at 202-622-6232 (not a toll-free number).

SUPPLEMENTARY INFORMATION:

Background

On December 27, 1991, the Service published in the **Federal Register**, a proposed amendment to the Regulations on Procedure and Administration (26 CFR part 301) under section 7216(b)(3) of the Internal Revenue Code of 1986 (56 FR 67024). A public hearing was held on June 3, 1992. After consideration of all comments regarding the proposed amendment, the amendment is adopted as revised by this Treasury decision.

Explanation of Provisions

Section 7216(b)(3) of the Internal Revenue Code of 1986 permits tax return information to be disclosed and used for purposes of conducting a quality or peer review. Existing regulations under section 7216 (§ 301.7216-2(o)) define a quality or peer review as a review that is undertaken to evaluate, monitor, and improve the quality and accuracy of a tax return preparer's tax preparation services.

The proposed regulations would permit a preparer's auditing and accounting services to be included within the scope of this definition and therefore be eligible for a review. The proposed regulations state that a quality or peer review is a review of a preparer's "tax preparation, accounting *and* auditing services" (*emph.* added).

One commentator expressed concern that the proposed regulations could be interpreted as permitting a review only of preparers who offer each of these three types of services. The commentator noted that some preparers offer less than all of these services and suggested replacing the word "and" with the word "or". To clarify that individuals who offer less than all of these services may be reviewed, the Service adopts the commentator's suggestion. Accordingly, this change is reflected in the final regulations.

Some commentators suggested that including accounting or auditing services within the definition of a quality or peer review would unnecessarily expand the scope of the regulation. They noted that accounting or auditing services may not be related to tax return preparation and recommended that the proposed regulations not be adopted.

This suggestion was not adopted because some preparers must undergo a review of their auditing or accounting services to comply with requirements of government agencies, and in order to be properly completed, these reviews may require disclosure of tax return information. For example, an audit peer review may require an examination of how the auditor treated prepaid or accrued, but unpaid, income taxes.

The Service also received comments stating that § 301.7216-2(o) should be revoked and comments suggesting that the classes of persons permitted to conduct a quality or peer review should be expanded to include non-certified, licensed public accountants (LPAs) who are neither enrolled agents, nor otherwise eligible to practice before the Service. Because these comments are not within the scope of the proposed regulations they are not considered in this document.

Special Analyses

It has been determined that these regulations are not major rules as defined in Executive Order 12291. Therefore, a Regulatory Impact Analysis is not required. It has also been determined that section 553(b) of the Administrative Procedure Act (5 U.S.C. chapter 5) and the Regulatory Flexibility Act (5 U.S.C. chapter 6) do not apply to these regulations, and, therefore, a final Regulatory Flexibility Analysis is not required. Pursuant to section 7805(f) of the Internal Revenue Code, the notice of proposed rulemaking for the regulations was submitted to the Chief Counsel for Advocacy of the Small Business Administration for comment on their impact on small business.

Drafting Information

The principal author of these regulations is David L. Meyer, Office of Assistant Chief Counsel, Income Tax and Accounting, Internal Revenue Service. However, personnel from other offices of the IRS and Treasury Department participated in their development.

List of Subjects 26 CFR Part 301

Administrative practice and procedure, Alimony, Bankruptcy, Child support, Continental shelf, Courts, Crime, Employment taxes, Estate taxes, Excise taxes, Gift taxes, Income taxes, Investigations, Law enforcement, Oil pollution, Penalties, Pensions, Reporting and recordkeeping requirements, Statistics, Taxes.

Amendments to the Regulations

Accordingly, 26 CFR part 301 is amended as follows.

PART 301—PROCEDURE AND ADMINISTRATION

Paragraph 1. The authority citation for part 301 continues to read in part:

Authority: 26 U.S.C. 7805 * * *

Par. 2. Section 301.7216-2(o) is amended by revising the third sentence to read as follows:

§ 301.7216-2 Disclosure or use without formal consent of taxpayer.

* * * * *

(o) *Disclosure or use of information for quality or peer reviews.* * * * A quality or peer review is a review that is undertaken to evaluate, monitor, and improve the quality and accuracy of a tax return preparer's tax preparation, accounting or auditing services. * * *

* * * * *

Dated: July 31, 1992.

Shirley D. Peterson,

Commissioner of Internal Revenue.

Approved:

Fred T. Goldberg, Jr.,

Assistant Secretary of the Treasury.

[FR Doc. 92-19460 Filed 8-17-92; 8:45 am]

BILLING CODE 4830-01-M

DEPARTMENT OF THE INTERIOR

Office of Surface Mining Reclamation and Enforcement

30 CFR Part 917

Kentucky Regulatory Program—Reclamation Bond Pool

AGENCY: Office of Surface Mining Reclamation and Enforcement (OSM), Interior.

ACTION: Final rule; approval of amendment.

SUMMARY: OSM is announcing the approval, with an exception of proposed amendments to the Kentucky regulatory program (hereinafter referred to as the Kentucky program) under the Surface Mining Control and Reclamation Act of 1977 (SMCRA). Addressed in this rulemaking are amendments to Kentucky Revised Statutes (KRS) found in House Bill 676, Senate Bill 202, and Senate Bill 338 which pertain to the reclamation bond pool and the abandoned mine lands enhancement

program. Also addressed are amendments to Kentucky Administrative Regulations (KAR) at 405 KAR 10:200 which implement Senate Bill 338. The amendments would relax the requirements for membership in the reclamation pool, limit the pool's liability to no more than the amount of the bond, and expand the pool to include participants in the abandoned mine land enhancement program.

EFFECTIVE DATE: August 18, 1992.

FOR FURTHER INFORMATION CONTACT: William J. Kovacic, Director, Lexington Field Office, Telephone (606) 233-2896.

SUPPLEMENTARY INFORMATION

I. Background on the Kentucky Program.
II. Submission of Amendment.
III. Director's Findings.
IV. Summary and Disposition of Comments.
V. Director's Decision.
VI. Procedural Determinations.

I. Background on the Kentucky Program

The Secretary of the Interior conditionally approved the Kentucky regulatory program effective May 18, 1982. Background information on the permanent program submission, as well as the Secretary's findings, the disposition of comments and a detailed explanation of the conditions of approval can be found in the May 18, 1982, **Federal Register** (47 FR 21404). Subsequent actions concerning the conditions of approval and program amendments are identified at 30 CFR 917.11, 917.13, 917.15, 917.16 and 917.17.

II. Submission of the Amendment

By letter dated September 18, 1989 (Administrative Record No. KY-916), Kentucky submitted proposed regulations to revise 405 KAR 10:200, the regulations governing the Kentucky Bond Pool. These revisions were undertaken in response to the enactment of Senate Bill 338. OSM announced receipt of the proposed amendments in the October 31, 1989, **Federal Register** (54 FR 45767), and in the same notice, opened the public comment period and provided opportunity for a public hearing on the adequacy of the proposed amendments. The public comment period ended on November 30, 1989. By letter dated January 19, 1990 (Administrative Record No. KY-957), Kentucky resubmitted proposed regulations to revise 405 KAR 10:200. OSM announced receipt of the revised amendment in the February 14, 1990, **Federal Register** (55 FR 5227), and in the same notice, reopened the public comment period and provided an opportunity for a public hearing. The public comment period ended on March 16, 1990.

In addition to the proposed amendment described above, this final rule addresses prior submissions from Kentucky that pertain to the bond pool on which the Director of OSM had deferred final action. In the August 10, 1990, **Federal Register** (55 FR 32618), OSM announced approval of proposed amendments submitted by Kentucky on April 21, 1988 (Administrative Record No. KY-800). In announcing his approval, the Director deferred action on Senate Bill 338, which was part of Kentucky's April 21, 1988, submission, in order to evaluate the results of a study of the reclamation bond pool.

In the February 6, 1991, **Federal Register** (56 FR 4721), OSM announced approval, with certain exceptions, of program amendments submitted by Kentucky on May 8, 1990 (Administrative Record No. KY-983). In announcing his approval, the Director deferred action on the amendments contained in House Bill 676 and Senate Bill 202 which revised Kentucky Revised Statutes (KRS) 350.710 through 350.750. These revisions pertain to the reclamation bond pool.

In the April 13, 1992, **Federal Register** (57 FR 12776), OSM announced the reopening and extension of the comment period for all of the above amendments in order to provide an opportunity for the public to comment on the amendments with respect to a January 8, 1992, actuarial study of the bond pool (Administrative Record No. KY-1102). This comment period closed on April 28, 1992.

A. Description of Proposed Amendments to Kentucky Revised Statutes

1. KRS 350.595 Bond Pool Fund for Abandoned Mine Land Enhancement Program

a. Section 1(1) of SB-338 amends KRS 350.595 to provide that an applicant desiring to remine property classified as abandoned mine land may apply to the bond pool commission for inclusion in the abandoned mine land enhancement program. The amendment further provides that the bond pool commission may provide coverage under the bond pool fund not to exceed 50 percent of the bond amount determined by the cabinet under KRS 350.060.

b. Section 1(2) of SB-338 amends KRS 350.595 to require that when bond provided under KRS 350.060 is increased or reduced, or is released in whole or in part, the coverage provided by the bond pool shall be proportionately increased or reduced.

c. Section 1(3) of SB-338 amends KRS 350.595 to provide that, in the event of bond forfeiture, moneys from the bond pool shall be used to supplement the forfeited bond.

2. KRS 350.700 Bond Pool Established

a. Section 2(2) of SB-338 amends KRS 350.700 to provide that the bond pool fund, which consists of money collected pursuant to KRS 350.725, shall include, civil penalties collected in excess of $800,000 in any fiscal year, as well as all moneys previously deposited in the abandoned mine land enhancement fund.

b. Section 2(3) of SB-338 amends KRS 350.700 to expand the bond pool fund to include the abandoned mine land enhancement program as described at KRS 350.595.

3. KRS 350.705 Bond Pool Commission

Section 3(9) of SB-338 amends KRS 350.705 to free the commission, the bond pool administrator, or their agents or employees of liability for any action taken in the performance of their powers and duties.

4. KRS 350.710 Powers of Commission

Section 4(9) of SB-338 amends KRS 350.710 to include as a responsibility of the bond pool commission the duty to determine the amount of bond coverage provided for properties in the abandoned mine land enhancement program.

5. KRS 350.715 Pool Administrator

Section 5(2)(h) of SB-338 amends KRS 350.715 to add to the responsibilities of the bond pool administrator the duty to account for the amount of coverage provided for properties in the abandoned mine land enhancement program.

6. KRS 350.720 Bond Pool; Criteria; Compliance Record

a. Section 10(5) of SB-202 and section 1(5) of HB-676 amend KRS 350.720 to delete reference to two acre-or-less operations from those operations or facilities not eligible for bond coverage by the bond pool fund.

b. Section 1 of HB-676 amends KRS 350.720 to expand the meaning of the term "bond pool applicant" to include bond pool "member." As a result, any duty or responsibility or eligibility criteria applicable to an applicant is also applicable to existing members of the bond pool.

c. Sections 6(7)(a)1, (b)1, and (c)1 of SB-338 amend KRS 350.720 by adding the phrase "or other permittee names as provided in paragraph (d) of this subsection" in determining the length of time the applicant has held a permit for purposes of assigning a rating to the

applicant. These amendments are required because of the amendment contained in SB–338 section 6(7)(d) which provides that, when approved by the commission on a case-by-case basis, permits held by persons other than the applicant may be used to demonstrate the years of mining experience of the applicant. This provision is applicable to (1) a person who owns 50 percent or more of the applicant; (2) a person who is owned 50 percent or more by a person discussed in subparagraph 1 of this paragraph; or (3) persons whose combined ownership of the applicant is 50 percent or more, provided that each person shall meet the years of mining experience required under KRS 350.720(7).

d. Section 6(10) of SB–338 amends KRS 350.720 to provide that where persons other than the applicant are considered in determining the number of years of mining experience of the applicant, each such person's compliance record shall be considered.

e. Section 1(11) of HB–676 amends KRS 350.720 to add the effective date of the suspension of the Federal rule covering the two-acre exemption in identifying experience which shall not be considered in the applicant's ratings assignment.

f. Section 6(14) of SB–338 adds a provision to KRS 350.720 which states that a person need not be a member of the bond pool in order to be provided coverage under the abandoned mine land enhancement program. In response to concerns raised by OSM (Administrative Record No. KY–859), Kentucky has clarified this provision by stating that nonmembers covered by the bond pool under the abandoned mine land enhancement program are subject to the bond requirements at KRS 350.060(14) and that total bond amounts will be determined in the same manner for members and nonmembers.

7. KRS 350.725 Membership Fee; Tonnage Fee

a. Section 7(1)(b) of SB–338 amends KRS 350.725 to delete the $500 reduction in the bond pool membership fee if the permittee files an application for membership within 60 days of July 15, 1986.

b. Section 2(1)(b) of HB–676 amends KRS 350.725 to add cash, cashier checks, and money orders as acceptable methods for payment of the bond pool membership fee.

c. Section 7(2) of SB–338 amends KRS 350.725 to change the tonnage fee to be paid by each member from eight cents per ton of coal extracted by surface mining activities and one cent per ton of coal extracted by underground mining methods, to a fee set by the bond pool commission based upon recommendations contained in the most recent actuarial study conducted in accordance with KRS 350.710(6).

8. KRS 350.735 Permit Specific Bond

Section 8(3) of SB–338 amends KRS 350.735 to provide that the permit-specific bond released in accordance with cabinet procedures for bond release shall be released in its entirety upon successful completion of that portion of reclamation set forth in KRS 350.093(4)(a) and the regulations promulgated pursuant thereto.

9. KRS 350.745 Payments from Fund for Reclamation

a. Section 9(2) of SB–338 amends KRS 350.745 by providing that, in case of a forfeiture, the sum of the amount paid from the bond pool fund and the amount of the forfeited permit-specific bond shall not exceed the bond amount under KRS 350.060 required to be in effect at the time of forfeiture. The amendment contained in SB–338 section 9(3) modifies KRS 350.745 by making the payments made by the bond pool administrator to the cabinet for estimated reclamation costs subject to the limitations set forth in SB–338 section 9(2).

b. Section 9(4) of SB–338 amends KRS 350.745 by adding provisions for the forfeiture of the bond for a permit in the abandoned mine land enhancement program. The amendment provides that the cabinet shall first use other bonds posted under KRS 350.060 and any additional money necessary to reclaim the permit area shall be withdrawn from the bond pool fund to the extent coverage has been provided and to the extent money exists in the fund. The amendment further provides that the sum of the amount of the forfeited bond shall not exceed the bond amount under KRS 350.060 required to be in effect at the time of forfeiture. In addition, the bond pool administrator shall pay to the cabinet the amount determined under this section within seven days following receipt of an official estimate of reclamation costs prepared by the cabinet.

10. KRS 350.750 Revocation of Membership in Bond Pool

a. Section (10)(2) of SB–338 amends KRS 350.750 by providing that whenever a bond pool member is issued a final order for cessation and immediate compliance for failure to abate a violation of contemporaneous reclamation or the secretary has issued a final order finding that a member has committed a pattern of violations, the bond pool administrator shall inform the commission which may revoke said membership, and when two such orders are issued to a member, that membership shall be automatically revoked. Prior to these amendments, membership in the bond pool was automatically revoked upon the issuance of an order for cessation and immediate compliance for failure to abate a violation of contemporaneous reclamation requirements or whenever the Secretary issued a final order finding that a member had committed a pattern of violations.

b. Section 5(4) of HB–676 amends KRS 350.750 by adding a provision whereby the bond pool member who transfers more than 50 percent of any class of stock or other ownership interest, whether by sale, gift or otherwise, and the person to whom more than 50 percent of the interest is transferred shall notify the bond pool administrator in writing within 15 days. The amendment further provides that the administrator shall review the eligibility of all persons who own or control, are owned or controlled by, or are under common ownership or control with the member. Finally, the commission shall revoke the membership if it determines that the member after the transfer does not meet the eligibility criteria.

11. KRS 350.990 Penalties

Section 11(1) of SB–338 amends KRS 350.990 to provide that all civil penalties collected in excess of $800,000 in any fiscal year shall be deposited in the bond pool fund. The amendment also provides that all moneys previously deposited in the abandoned mine land enhancement program shall be redeposited in the bond pool fund. The amendment deletes outdated loan and repayment arrangements between the abandoned mine land enhancement program and the bond pool fund, and deletes reference to administration of the abandoned mine land enhancement program by the secretary.

B. Description of Proposed Amendments to 405 KAR 10:200 Kentucky Bond Pool

1. Section 1, Definitions

Kentucky proposes to modify its definition of "member" by deleting the requirement that only permits held by bond pool members can be covered by the bond pool. This modification is made to implement the change to KRS 350.720(14) which authorizes bond pool coverage for participants in the abandoned mine land enhancement program.

2. Section 5, Review of Applications

Kentucky proposes to add 405 KAR 10:200(5)(3) which authorizes the bond pool commission to defer its decision on an application for membership if the applicant, any person who owns or controls the applicant, any person who is owned or controlled by the applicant, or any person who is under common ownership or control with the applicant has appealed a violation or cessation order or has a violation or cessation order pending an appeal or penalty assessment that would affect the applicant's eligibility or rating.

3. Section 7, Determination of Reclamation Compliance Record

Kentucky proposes to revise the criteria that the commission uses to determine the compliance record of an applicant for membership in the bond pool. To obtain an excellent or acceptable compliance rating, the applicant must never have committed a violation for mining without having first obtained a mining permit. The purpose of this new provision is to bar wildcat operators from participation in the bond pool. Also, the applicant must never have had a permit revoked.

Other criteria under the proposed rules will be relaxed. For example, an applicant may receive an excellent compliance rating even through he has had one failure-to-abate cessation order in the most recent 36 months of operation provided that the order was abated in a timely manner and was not for a violation of contemporaneous reclamation. Furthermore, an applicant may receive an excellent rating even though he has been issued one cessation order within the most recent 36 months because a condition or practice created imminent danger to the public or imminent significant environmental harm to land, air or water resources provided the order was abated in a timely manner. Previously, no cessation orders of these types were allowed.

Still other revisions in section 7 will allow applicants to receive an excellent compliance rating if they have a violation of contemporaneous reclamation requirements so long as the violation is abated in a timely manner. Certain violations may be excluded from consideration in determining compliance ratings if they have been terminated by the cabinet with no civil penalty and the commission is acting for good cause and by unanimous vote. A similar relaxation is also proposed for the criteria to be used in determining an acceptable compliance record.

4. Section 8, Acceptance of Permit Areas into Bond Pool.

Kentucky proposed to add a new provision at KAR 10:200(8)(5) that would require bond pool members to notify the bond pool administrator in writing within 14 calendar days of the submission of a preliminary permit application to the cabinet.

III. Director's Findings

Set forth below pursuant to SMCRA and the Federal regulations at 30 CFR 732.15 and 732.17, are the Director's findings concerning the proposed amendments to the Kentucky program. Only substantive changes will be discussed in detail. Revisions not specifically discussed are found to be no less stringent than SMCRA and no less effective than the Federal regulations.

Section 509(c) of SMCRA authorizes the Secretary of Interior to approve as part of a State or Federal program an alternative bonding system that will achieve the objectives and purposes of the bonding program as stated in section 509. These objectives and purposes are codified at 30 CFR 800.11(e) as follows:

(A) The alternative must assure that the regulatory authority will have available sufficient money to complete the reclamation plan for any areas which may be in default at any time; and

(B) The alternative must provide a substantial economic incentive for the permittee to comply with all reclamation provisions.

Kentucky's existing statutes and rules governing the bond pool were found by OSM to satisfy these objectives and purposes on July 18, 1986 (51 FR 26002), and March 9, 1987 (52 FR 7136), when the reclamation bond pool was first proposed for inclusion in the Kentucky program. OSM's evaluation today seeks to determine whether these same objectives and purposes can still be achieved given the proposed revisions to the bond pool.

OSM's analysis is made less speculative by the fact that Kentucky has already implemented the proposed revisions. On January 19, 1990, Kentucky notified OSM that revisions to 405 KAR 10:200 had become effective on January 9, 1990 (Administrative Record No. KY-957). Also, on April 21, 1988, Kentucky notified OSM that the statutory revisions found in Senate Bill 338 became effective on July 15, 1988 (Administrative Record No. KY-800). OSM does not recognize these revisions as part of Kentucky's approved state program. Nonetheless, the proposed revisions have been in effect for nearly four years, making the immediate impact a matter of record rather than speculation.

The Kentucky bond pool is governed by a seven member bond pool commission which reports to the Governor each year on the status of the bond pool. In the Commission's most recent report which covered the period October 1, 1990, to September 30, 1991, the Commission reported that the pool has 32 members. The bond pool had bonded 306 separate permits or increments covering 8,669.85 acres for which it was potentially liable for $17,534,034 in the event of forfeiture of all bonded acres. The pool's September 30, 1991, account balance was $5,897,585.37. Receipts during the fiscal year, taking into consideration both operating and investment accounts, exceeded expenditures by $1,002,783.37 (Administrative Record No. KY-1159). Since the pool was started on July 18, 1986, there has been only one member who could not satisfy his reclamation obligations. This member forfeited bond on one permit which has been successfully reclaimed by the Commission. Forfeiture proceedings have been initiated on two other permits held by this former member for which the pool is financially liable.

Under Kentucky law (KRS 350.710(6)), the Commission must employ a qualified actuary to conduct an actuarial study of the bond pool every three years. The most recent study was completed on January 8, 1992, based upon data available on June 30, 1991 (Administrative Record No. KY-1102). OSM relied heavily upon this study in reaching conclusions about the proposed amendments.

OSM evaluated the proposed revisions to determine whether the bond pool will have available sufficient money to complete the reclamation plan of pool participants for any areas which may be in default at any time as required by 30 CFR 800.11(e)(1). The following proposed revisions were considered to have an impact on satisfying this objective.

1. Relaxation of Reclamation Compliance Ratings

Kentucky proposes to revise the criteria at KRS 350.720 and 405 KAR 10:200(7) which determine a bond pool applicant's reclamation compliance rating. The effect of these changes is to allow companies with weaker compliance records to be eligible for pool membership and for those already eligible to receive a higher rating. This has the potential of increasing the risk of forfeiture and placing a greater financial burden on the pool.

SMCRA does not place limitations on participation in alternative bonding systems. As of September 1991, there were 32 members in the pool which is about the same number as existed prior to the time when the proposed revisions became effective. All of the members have "A" ratings except for one which has a "B" rating. Membership in the pool has been relatively stable in spite of the relaxation in reclamation compliance ratings. Further, there has been no increase in risk of forfeiture evidenced by the relaxation in membership requirements. The January 8, 1992, actuarial analysis of the Kentucky Bond Pool considered the proposed weaker compliance records and did not expect that they would jeopardize the quality of members when considered in light of Kentucky's established record of carefully screening applicants (Administrative Record No. KY-1102).

2. Relaxation of Membership Revocation Standard

Kentucky proposes to amend KRS 350.750 so that revocation of bond pool membership by the commission is discretionary rather than mandatory for those members who have been issued a final order for cessation and immediate compliance for failure to abate a violation of contemporaneous reclamation or when there is a final order finding a pattern of violations. There is no Federal rule which corresponds to this regulation. The effect of this proposed revision depends on how the commission exercises its discretionary powers. The Director believes that the commission will continue to act responsible in such matters and will not place the pool in undue risk.

3. Adjustment of Tonnage Fees

Kentucky proposes to revise KRS 350.725 to allow the bond pool commission to establish tonnage fees based on recommendations in the most recent actuarial study. Previously each member paid eight cents per ton of coal extracted by surface mining activities and one cent per ton extracted by underground mining methods. As previously stated, the pool, after expenses, increased by slightly over one million dollars during the past fiscal year. The adjustments to tonnage fees appear to be warranted in light of the large increase in the account balance.

SMCRA does not specify how an alternative bonding system is to be financed. The only requirement is that sufficient funds be available to complete reclamation in the event of forfeiture. The current annual fees were set by the Commission at five cents per ton for surfaced mined coal and one cent per ton for underground mined coal. The January 8, 1992, actuarial analysis which was based on these fees concluded that the overall funding arrangements of the pool including the tonnage fees are expected to be more than adequate to cover forfeiture costs.

4. Expansion of Coverage

Kentucky proposes to amend KRS 350.595 to expand pool coverage to include those operators who plan to remine property under the abandoned mine land enhancement program. The proposed amendment would authorize coverage in an amount not to exceed 50 percent of the total bond. Because abandoned mine sites are usually more difficult to mine and successfully reclaim, this provision is likely to increase the risk of forfeiture. The experience of the last four years has shown that few operators desire to participate in the abandoned mine land enhancement program. There is only one operator in the abandoned mine land enhancement program. This operator is also a participant in the bond pool. There is no evidence to suggest that his type of pool participant will increase in number. Further, the January 8, 1992, actuarial analysis concluded that the incorporation of the abandoned mine land enhancement fund into the bond pool fund had an overall positive financial impact on the bond pool.

5. Deposit of Civil Penalties

Under proposed KRS 350.990, all civil penalties collected by Kentucky in excess of $800,000 in any fiscal year and all monies previously in the abandoned mine land enhancement program will be deposited in the bond pool fund. In 1988, this provision resulted in a transfer of $2.4 million to the bond pool. Civil penalty collections transferred to the bond pool during fiscal year 1991 were $543,880.51. Annual receipts from civil penalties are expected to continue at about the same level. The impact of KRS 350.990 has been to significantly enhance the financial viability of the bond pool without a corresponding increase in liability.

6. Cap on Pool Liability

Proposed KRS 350.745(2) limits the pool's liability to the amount of bond determined under KRS 350.060. Under existing law, there is no limit to the fund's liability. The fund is required to complete the reclamation plan no matter what the cost. Where the cost of reclamation has been significantly underestimated, forfeiture can negatively impact the pool's financial solvency. The proposed limit on pool liability to the amount of bond determined by Kentucky reduces the risk that any one forfeiture or group of forfeitures could bankrupt the pool.

While the concept of a cap on liability is desirable from an actuarial standpoint, the Director must examine the proposed provision within the framework of SMCRA and the regulations promulgated thereunder. The rules at 30 CFR 800.11(e)(1) require an alternative bonding system to assure sufficient funds to complete the reclamation plan in the case of forfeiture. There can be no such assurance when a cap is placed on liability. For this reason, the Director finds that KRS 350.745(2) is less stringent than the minimum requirements of section 509(c) of SMCRA and less effective than the Secretary's rules at 30 CFR 800.11(e)(1). KRS 350.745(2) is therefore not approved.

The January 8, 1992, actuarial study, giving consideration to the proposed revisions described above, arrived at the general conclusion that the June 30, 1991, fund balance was sufficient to cover expected liabilities and provide a large margin for adverse conditions. Thus, based on OSM's review and this private actuarial study, the Director finds that the proposed amendments, with the one exception noted above, are not inconsistent with section 509(c) of SMCRA and the Federal rules at 30 CFR 800.11(e)(1).

OSM evaluated the proposed revisions to determine whether the second objective and purpose of an alternative bonding system could be satisfied. As stated at 30 CFR 800.11(e)(2), the alternative bonding system must provide substantial economic incentive for the permittee to comply with all reclamation provisions. The Federal regulations are silent on the form which this incentive must take and state only that it must exist.

The bond pool has several provisions that can be considered economic incentives for operators to comply with all reclamation requirements of the Kentucky program. Under KRS 350.750(2), whenever a member of the bond pool is issued an order for cessation and immediate compliance for failure to abate a violation of contemporaneous reclamation requirements, the bond pool administrator is required to inform the bond pool commission which may revoke the operator's membership in the pool. If two such orders are issued, membership is automatically revoked. Furthermore, the bond pool administrator is required under KRS

350.750(3) to inform the bond pool commission whenever a member of the pool is issued an order for cessation and immediate compliance for failure to abate any violation. The Commission may revoke the member's membership in the bond pool upon review of the violation. Thus, the threat of loss of membership in the pool and the associated economic benefit to the operator is considered an incentive to comply with all reclamation provisions of the Kentucky program.

KRS 350.755 states that no person shall be eligible to receive another permit or to begin another operation if, as a result of bond forfeiture, monies from the bond pool have been expended to reclaim such person's operation and the person has not reimbursed the bond pool for monies expended. This provision is considered an incentive to avoid forfeiture since the offending operator would be prevented from continuing mining operations.

During a May 27, 1992, meeting, OSM questioned Kentucky concerning economic incentives that will encourage operators to complete reclamation and obtain final bond release if tonnage fees were suspended as provided by KRS 350.730 and if the permit-specific penal bond had been already released. This concern arose out of past experience during the interim program when operators found it advantageous to delay completing the final steps in reclamation plans because the cost of maintaining sites under bond was minimal. Kentucky responded that the bond pool administrator reviews all member's compliance records in order to make recommendations to the Commission as required by KRS 350.720(8). As part of this review, the administrator checks to determine if the member has received timely bond releases as required by KRS 350.720(9). Failure to obtain timely bond releases will result in a recommendation to downgrade the operator's membership rating and increase the permit-specific bond. Kentucky contended that this will motivate operators to complete reclamation in a timely manner. The Director finds, based upon this response and the provisions in Kentucky's program related to pool membership revocation and loss of eligibility to receive future permits, that the amendment is no less effective than 30 CFR 800.11(e)(2) and is not inconsistent with section 509(c) of SMCRA.

IV. Summary and Disposition of Comments

OSM solicited public comment and provided opportunity for a public hearing on the proposed amendment. Substantive comments were received from Coal Operators and Associates, Inc. (COA) and the Kentucky Resources Council (KRC).

COA supported the amendment which they believed would strengthen the bond pool by increasing participation by small and medium-sized operators who would otherwise not be eligible for membership. They considered the relaxation of membership requirements warranted in light of the complexities of the mining process and the increased enforcement stance of Kentucky's Department for Surface Mining Reclamation and Enforcement (DSMRE).

The KRC had several concerns about the proposed amendment which related to bond pool funding, scope of coverage and membership eligibility. KRC believed that the fund should maintain solvency solely through the assessment of tonnage fees sufficient to cover reasonable worst-case actuarial risk and not rely upon investment and penalty income which it believed were subject to significant fluctuations. OSM recognizes that investment income will fluctuate with interest rates, civil penalty income will fluctuate with level of enforcement activity and diligence of operators, and tonnage fees will vary with mining activity which is dependent on coal markets. Consequently, there is a continuing need to monitor revenues and expenditures and potential future liabilities. OSM believes the Kentucky bond does this. KRS 350.710 requires the bond pool commission to perform audits biennially and to perform an actuarial study no less than every three years. KRS 350.725(2) requires that tonnage fees be set by the Commission based upon the most recent actuarial study. Furthermore, KRS 350.730(3) provides that the minimum and maximum amounts in the fund shall automatically be increased to conform to recommendations from the most recent actuarial study. Thus, tonnage fees can be reinstated for those operators who were eligible for suspension of payments and adjusted in amount in response to fluctuations in forfeiture levels, interest rates, penalty income and coal production. The Director believes there is sufficient flexibility in the pool to assure solvency and therefore rejects the KRC comment that solvency must be accomplished solely through the assessment of tonnage fees.

KRC commented that the solvency of the pool is dependent on an artificial cap on liability created by proposed KRS 350.745(2) which states that in the event of forfeiture the sum of the amount paid from the bond pool fund and the amount of forfeited permit-specific bond, if any, shall not exceed the bond amount under KRS 350.060(11). KRC also commented that the implementing rules at KAR 10:020(1) require the bond amount initially to be computed to be sufficient to assure completion of reclamation if the work had to be performed by the cabinet in the event of forfeiture. KRC stated that OSM's Lexington Field Office's Annual Reports have documented the inadequacy of bond amounts and that limiting bond pool liability to the arbitrary bond levels set by DSMRE will result in sites being unreclaimed or partially reclaimed rather than fully restored to permanent program standards. KRC asserts that as a consequence, the proposed amendments fail to meet the requirements of section 509(c) of SMCRA.

OSM agrees with KRC. The proposed cap on liability is not being approved. Second, OSM agrees that Kentucky's bond amounts are inadequate. Kentucky law and regulations require that the amount of bond shall be the estimated cost to the cabinet if it had to perform the reclamation, restoration and abatement work required by the operator under his permit and the Kentucky permanent program. Kentucky has not fully implemented this provision. In his November 19, 1990, letter to the Secretary of the Kentucky National Resources and Environmental Protection Cabinet, the Director of OSM stated: "Bond amounts are insufficient to complete reclamation on a majority of the forfeited permanent program permits. Kentucky has not changed its method of calculating bond amounts. This situation continues to support the conclusion that bond amounts are not adequate" (Administrative Record No. KY-1016). To address this problem, DSMRE established a bond steering committee with representatives from the coal and surety industries and public interest groups. The committee was scheduled to complete its report in September 1991, with recommendations to correct the problem. This schedule for completion has been revised and the committee is now expected to finish its report later this year. OSM believes that once Kentucky fully implements KRS 350.060(11) and KAR 10:020(1) bond amounts will be sufficient in the majority of forfeiture cases to complete the reclamation plans. The inadequacy of bond amounts is a program wide problem which affects both bond pool participants and non-participants. The Director therefore believes that it is appropriate to address it in the context of the entire program rather than the bond pool.

The KRC is correct in its assertion that the inadequate bond amounts and the proposed cap on liability weaken the commission's most recent actuarial study of the bond pool by understating the potential liabilities. The analysis however does provide a large margin for error. Under the most adverse scenario, the bond fund balance is projected to be adequate to cover costs and provide a margin for additional variability in each year. This adverse scenario utilizes claim costs at a level expected to exceed actual cost ninety percent of the time. It also assumes no penalty income is collected and that new member growth is at twice the best estimate growth rate. Given these extremely adverse assumptions, fund balances of between $5 million and $6 million are projected for all of the next five years (Administrative Record No. KY-1102). The Director believes that this financial strength compensates for any under estimation of liabilities which the commenter has noted.

KRC commented that the bond pool should serve as a third party guarantor to assure full reclamation in the event of default by pool members. Under 30 CFR 800.11(e)(1), all alternative bonding systems must assure the availability of sufficient money to complete the reclamation plan. The amendment would assure that sufficient money be available to cover the estimated cost of reclamation as determined by DSMRE when setting the amount of bond. There may be differences between estimated cost and actual cost of reclamation. As previously discussed, OSM has determined that to be as effective as 30 CFR 800.11(e)(1), an alternative bonding system must assure the availability of sufficient money to complete the reclamation plan. Limiting liability to the amount of bond determined by DSMRE does not provide the required assurance. The Director has consequently determined that the proposed language at KRS 350.745(2) which limits bond pool liability to the amount of bond set under KRS 350.060 is not as effective as 30 CFR 800.11(e)(1) which would require the expenditure of funds from the bond pool until the reclamation plan is complete.

KRC commented that it believed the number of forfeitures estimated was understated. The January 8, 1992, actuarial study assumed a forfeiture rate of two percent based on an examination of summaries of forfeitures of permanent program permits in Kentucky through 1990. Companies mining more than 500,000 tons were excluded from consideration since they have free forfeitures and might have distorted the results. The Director believes this estimating procedure is reasonable and is likely to result in a conservative estimate of the forfeiture rate.

KRC objected to the revision of KRS 350.595 which incorporated the abandoned mine land enhancement fund into the bond pool fund. The Director addressed this topic when he endorsed the finding of the January 8, 1992, actuarial study which concluded that, overall, this revision significantly enhanced the viability of the bond pool without a corresponding increase in liability.

KRC objected to the proposed relaxation of reclamation compliance ratings set forth at KRS 350.720 and 405 KAR 10:200(7). The Director addressed this topic above when he concluded that bond pool membership has been relatively stable and that the bond commission carefully screens all applicants. He does not believe the commenters' objections are justified in light of the performance of the bond pool during the past four years.

KRC commented that subsidence impacts must be within the scope of bond liability with the adjustment of bond levels to reflect the costs of restoration of subsidence impacts once such impacts occur. The commenter appears to be objecting to KRS 350.720(6) which states that the bond pool fund shall not assume any part of a member's responsibility for damage due to subsidence which occurs in connection with underground mining or auger mining. This provision was approved by OSM in the March 9, 1987, **Federal Register** (52 FR 7132). Kentucky is not proposing to amend KRS 350.720(6).

V. Director's Decision

Based on the findings discussed above, the Director is approving, with an exception: (A) The proposed bond pool amendment submitted to OSM by Kentucky on September 18, 1989, and resubmitted on January 19, 1990; (B) that part of Kentucky's April 21, 1988, amendment upon which the Director deferred final action; and (C) that part of Kentucky's May 8, 1990, amendment upon which the Director deferred final decision. The Director has determined that the amendment, with the exception of proposed KRS 350.745(2), is no less stringent than SMCRA and consistent with regulations issued by the Secretary of Interior. The Federal regulations at 30 CFR part 917 codifying decisions concerning the Kentucky program are being amended to implement this decision.

EPA Concurrence

Under 30 CFR 732.17(h)(11)(ii), the Director is required to obtain the written concurrence of the Administrator of the Environmental Protection Agency (EPA) with respect to any provisions of a State program amendment that relates to air or water quality standards promulgated under the authority of the Clean Water Act (33 U.S.C. 1251 *et seq.*) or the Clean Air Act (42 U.S.C. 7401 *et seq.*). The Director has determined that this amendment contains no provisions in these categories and that EPA's concurrence is not required.

Effect of Director's Decision

Section 503 of SMCRA provides that a State may not exercise jurisdiction under SMCRA unless the State program is approved by the Secretary. Similarly, 30 CFR 732.17(a) requires that any alteration of an approved State program be submitted to OSM for review as a program amendment. Thus, any changes to a State program are not enforceable until approved by OSM. The Federal regulations at 30 CFR 732.17(g) prohibit any unilateral changes to approved programs. In the oversight of the Kentucky program, the Director will recognize only the approved program, together with any consistent implementing policies, directives and other materials, and will require the enforcement by Kentucky of such provisions.

VI. Procedural Determinations

National Environmental Policy Act

The Secretary has determined that, pursuant to section 702(d) of SMCRA, 30 U.S.C. 1292(d), no environmental impact statement need be prepared on this rulemaking.

Executive Order No. 12291 and the Regulatory Flexibility Act

On July 12, 1984, the Office of Management and Budget (OMB) granted OSM an exemption from sections 3, 4, 7, and 8 of Executive Order 12291 for actions related to approval or conditional approval of State regulatory programs. Therefore, preparation of a regulatory impact analysis and OMB regulatory review is not required.

The Department of the Interior has determined that this rule will not have a significant economic impact on a substantial number of small entities under the Regulatory Flexibility Act (5 U.S.C. 601 *et seq.*). The State submittal which is the subject of this rule is based upon counterpart Federal regulations for which an economic analysis was prepared and certification made that

such regulations would not have a significant economic effect upon a substantial number of small entities. Hence, this rule will ensure that existing requirements previously promulgated by OSM will be implemented by the State. In making the determination as to whether this rule would have a significant economic impact, the Department relied upon the data and assumption for the counterpart Federal regulations.

Paperwork Reduction Act

This rule does not contain information collection requirements that require approval by the Office of Management and Budget under 44 U.S.C. 3507.

Executive Order 12778

The Department of the Interior has conducted the reviews required by section 2 of Executive Order 12778 and has determined that, to the extent allowed by law, this rule meets the applicable standards of subsections (a) and (b) of that section. However, these standards are not applicable to the actual language of State regulatory programs and program amendments since each such program is drafted and promulgated by a specific State, not by OSM. Under section 503 and 505 of SMCRA (30 U.S.C. 1253 and 1255) and 30 CFR 730.11, 732.15, and 732.17(h) (10), decisions on proposed State regulatory programs and program amendments submitted by the State must be based solely on a determination of whether the submittal is consistent with SMCRA and its implementing Federal regulations and whether the requirements of 30 CFR part 730, 731, and 732 have been met.

List of Subjects in 30 CFR Part 917

Intergovernmental relations, Surface mining, Underground mining.

Dated: July 7, 1992.

Ronald Recker,

Acting Assistant Director, Eastern Support Center.

For reasons set out in the preamble, title 30, chapter VII, subchapter T of the Code of Federal Regulations is amended as set forth below:

PART 917—KENTUCKY

1. The authority citation for part 917 continues to read as follows:

Authority: 30 U.S.C. 1201 *et seq.*

2. 30 CFR 917.15, is amended by adding a new paragraph (kk) to read as follows:

§ 917.15 Approval of regulatory program amendments.

* * * * *

(kk) The following amendments to the Kentucky Administrative Regulations (KAR) as submitted to OSM on September 18, 1989, and revised on January 19, 1990, and to the Kentucky Revised Statute (KRS) as submitted to OSM on April 21, 1988, and May 8, 1990, with the exception of KRS 350.745(2). The approved amendments consist of modification to the 405 KAR 10:200 and KRS 350.710–710 which pertain to the reclamation bond pool and the abandoned mine land enhancement program. The exception pertains to the limitation of bond pool liability to the bond amount determined under KRS 350.060.

[FR Doc. 92–19570 Filed 8–17–92; 8:45 am]

BILLING CODE 4310–05–M

---

30 CFR Part 935

Ohio Regulatory Program; Revision of Administrative Rule

AGENCY: Office of Surface Mining Reclamation and Enforcement (OSM), Interior.

ACTION: Final rule; approval of amendment.

SUMMARY: OSM is announcing the approval of proposed Revised Program Amendment Number 53 to the Ohio permanent regulatory program (hereinafter referred to as the Ohio program) under the Surface Mining Control and Reclamation Act of 1977 (SMCRA). The amendment is intended to revise one rule in the Ohio Administrative Code concerning the characteristics of highwalls which are not entirely eliminated in areas to be covered by impoundments.

EFFECTIVE DATE: August 18, 1992.

FOR FURTHER INFORMATION CONTACT: Mr. Richard J. Siebel, Director, Columbus Field Office, Office of Surface Mining Reclamation and Enforcement, 2242 South Hamilton Road, room 202, Columbus, Ohio 43232; (614) 866–0578.

SUPPLEMENTARY INFORMATION:

I. Background on the Ohio Program.
II. Submission of Amendment.
III. Director's Findings.
IV. Summary and Disposition of Comments.
V. Director's Decision
VI. Procedural Determinations.

I. Background on the Ohio Program

On August 16, 1982, the Secretary of the Interior conditionally approved the Ohio program. Information on the general background of the Ohio program submission, including the Secretary's findings, the disposition of comments, and a detailed explanation of the conditions of approval of the Ohio program, can be found in the August 10, 1982 **Federal Register** (47 FR 34688). Subsequent actions concerning the conditions of approval and program amendments are identified at 30 CFR 935.11, 935.12, 935.15, and 935.16.

II. Submission of Amendment

By letter dated September 10, 1991 (Administrative Record No. OH–1581), Ohio submitted proposed Program Amendment Number 53. The amendment proposed to delete Ohio Administrative Code (OAC) Section 1501:13–9–04 paragraph (H)(2)(e). This paragraph currently requires operators to eliminate highwalls in areas which are to be covered by permanent impoundments. In place of this existing provision, Program Amendment Number 53 proposed a new paragraph (H)(1)(i) to OAC Section 1501:13–9–04. This new paragraph would require that the vertical portion of any remaining highwall beneath the surface of impoundments shall be located far enough below the low-water line of the impoundment to provide adequate safety and access for future users of the impoundment.

OSM announced receipt of proposed Program Amendment Number 53 in the October 2, 1991, **Federal Register** (56 FR 49856), and, in the same notice, opened the public comment period and provided opportunity for a public hearing on the adequacy of the proposed amendment. The public comment period ended on November 1, 1991. The public hearing scheduled for November 28, 1991, was not held as no one requested an opportunity to testify.

By letter dated December 17, 1991 (Ohio Administrative Record No. OH–1617), Ohio submitted Revised Program Amendment Number 53 containing four additional proposed revisions to OAC Section 1501:13–9–04. The four new revisions proposed in the December 17, 1991, submission concerned the remaining vertical portion of the highwall below the water line, the final slope of the reduced portion of the highwall, and the vegetative cover of the reduced portion of the highwall.

OSM announced receipt of proposed Revised Program Amendment Number 53 in the January 17, 1992, **Federal Register** (57 FR 2066), and, in the same notice, opened the public comment period and provided opportunity for a public hearing on the adequacy of the proposed amendment. The public comment period ended on February 18, 1992. The public hearing scheduled for February 1, 1992, was not held as no one requested an opportunity to testify.

By letter dated March 25, 1992 (Ohio Administrative Record No. OH-1670), OSM provided Ohio with its questions and comments about the September 10 and December 17, 1991, amendment submissions. By letter dated April 27, 1992 (Ohio Administrative Record No. OH-1688), Ohio responded with two further revisions to OAC Section 1501:13-9-04. In this newest version of Revised Program Amendment Number 53, Ohio is deleting reference to the "remaining" portion of the highwall and is deleting proposed language which would have established the maximum allowable final slope of the reduced portion of the highwall. Ohio is now proposing that OAC Section 1501:13-9-04 paragraph (H)(2)(g) read: "The reduced portion of any highwall shall have a final slope appropriate for the postmining land use and shall have a minimum static safety factor of 1.3."

OSM announced receipt of Ohio's additional proposed changes to Revised Program Amendment Number 53 in the June 2, 1992, **Federal Register** (57 FR 23179), and, in the same notice, opened the public comment period and provided opportunity for a public hearing on the adequacy of the proposed amendment. The public comment period ended on June 17, 1992. The public hearing scheduled for June 12, 1992, was not held as no one requested an opportunity to testify.

III. Director's Findings

Set forth below, pursuant to SMCRA and the Federal regulations at 30 CFR 732.15 and 732.17, are the Director's findings concerning the proposed amendment. Revisions which are not discussed below concern minor nonsubstantive language changes or paragraph letter notations to reflect organizational changes resulting from this amendment.

1. *OAC 1501:13-9-04 (H)(1)(i), (H)(2)(d), and (H)(2)(e)*

Ohio is adding a new subparagraph (H)(1)(i) to OAC 1501:13-9-04 to require that the vertical portion of any remaining highwall beneath the surface of impoundments shall be located far enough below the low water line of the impoundment to provide adequate safety and access for future users of the impoundment. Further, new subparagraph (H)(1)(i) requires that the vertical portion of the remaining highwall for permanent impoundments shall also meet the requirements of paragraph (H)(2)(d) of this rule. Ohio is deleting subparagraph (H)(2)(e) which currently requires operators to eliminate highwalls in areas which are to be covered by permanent impoundments.

Ohio is amending subparagraph (H)(2)(d), which requires that final grading of permanent impoundments provide for adequate safety and access for proposed water users, by adding the statement "[f]or impoundments where the vertical portion of a highwall remains, the vertical portion shall be located at least eight feet below the low-water line."

The proposed provision at subparagraph (H)(1)(i) is nearly identical to the Federal regulations at 30 CFR 816/817.49(a)(9) except for the statement that the vertical portion of the remaining highwall at permanent impoundments shall also meet the requirements of (H)(2)(d). The current rule at subparagraph (H)(2)(d) is substantively identical to the Federal counterpart at 30 CFR 816/817.49(b)(4). The proposed language differs from the Federal regulations at 30 CFR 816/817.49(b)(4) in that the proposed Ohio provision establishes a minimum depth beneath which the vertical portion of the highwall must remain.

In May 1982, OSM published "Planning and Management of Mine-Cut Lakes at Surface Coal Mines" (Technical Release No. 82/1). This reference states that recreation, livestock and wildlife uses of mine-cut impoundments require accessible slopes. Appropriate design for these uses would suggest a gradual slope above and below the water line, avoiding dangerous drop-offs. Also, it is suggested that a safe shore for human access should have a gentle slope to a six-foot water depth before dipping more steeply. A person could easily wade in six-foot water without the fear of a sudden drop-off. Steep underwater slopes may be dangerous for swimmers, poor for waterfowl, and a barrier to livestock watering.

In the final rule notice approving the Federal rule at 30 CFR 816.49(a)(9) (48 FR 43994, 43999, September 26, 1983) OSM reworded the proposed rule to clarify that the intent of the requirement is to ensure safety and access as well as stability and protection of exposed surfaces. OSM responded to commenters who suggested deleting the language "far enough below" by retaining the language "far enough below" to ensure that water coverage is adequate even during the low-water periods. Likewise, the Federal rule at 30 CFR 816.49(b)(4), which applies specifically to permanent impoundments, requires that final grading provide for adequate safety and access for proposed water users. Section 515(b)(8) of SMCRA permits the creation of permanent impoundments if it is demonstrated that, among other things, the water level be reasonably stable and final grading provide adequate safety and access for proposed water users.

In conclusion, based on OSM's guidelines and the Federal regulations, Ohio's proposal for the existence of submerged highwalls within permanent impoundments at a minimum depth of eight feet provides a greater margin of safety for the swimmer and can be considered safe and no less effective than the corresponding Federal rules. The Director finds, therefore, that proposed subparagraphs (H)(1)(i) and (H)(2)(d) are no less effective than the Federal rule at 30 CFR 816/817.49 (a)(9) and (b)(4). In addition, the proposed deletion of former subparagraph (H)(1)(e) does not render the Ohio program to be less effective than the Federal regulations because 30 CFR 816/817.49 allows submerged highwalls under the proper conditions.

2. *OAC 1501:13-9-04(H)(2)(g)*

Ohio is adding a new subparagraph (H)(2)(g) to provide that the reduced portion of any highwall shall have a final slope appropriate for the postmining land use and shall have a minimum static safety factor of 1.3. There is no specific counterpart Federal rule which addresses stability requirements for highwalls which are reduced to construct permanent impoundments. However, in the Federal regulations at 30 CFR 816/817.102(a)(3) OSM has required the 1.3 safety factor for each backfilled and graded area. Ohio implements the 1.3 minimum safety factor for backfilled and graded areas at OAC 1501:13-9-14(C)(1). Since this amendment reduces highwalls so that they no longer are vertical, they must meet the requirements of 30 CFR 816/817.102(a)(3). The Director, therefore, finds that the proposed rule is consistent with the Federal rules at 30 CFR 816/817.102(a)(3).

3. *OAC 1501: 13-9-04(H)(2)(h)*

At subparagraph (H)(2)(h) Ohio is requiring that "[t]he face of the reduced portion of any highwall shall be vegetated with species appropriate for the postmining land use." This reduced portion, which is above the waterline, must meet the Federal regulations at 30 CFR 816.817.111. These regulations require that a vegetative cover be established on regraded areas and that the plant species be compatible with the approved postmining land use. In addition, Ohio's proposed rule is consistent with its revegetation rules at OAC 1501:13-9-15 (B) and (C). The Director, therefore, finds the proposed

rule is consistent with the revegetation requirements at 30 CFR 816/817.111.

IV. Summary and Disposition of Comments

Public Comments

The public comment period and opportunity to request a public hearing in the October 2, 1991, **Federal Register** closed on November 1, 1991. Comments were received from the Ohio Historic Preservation Office (OHPO) and the Central Ohio Coal Company (COCC). In the January 17, 1992, **Federal Register**, the public comment period was reopened until February 18, 1992, to afford the public an opportunity to once again consider the proposals in light of additional information submitted by Ohio. Comments were received from the Ohio Mining and Reclamation Association (OMRA). The public comment period was reopened again in the June 2, 1992, **Federal Register**, until June 17, 1992, to afford the public an opportunity to consider the proposals in light of revisions submitted by Ohio. No one requested an opportunity to testify at the scheduled public hearings so no hearings were held.

All comments received during the comment periods are discussed below.

1. The OHPO stated that under the Section 106 review process Federal agencies are required to take into account how each of its undertakings could affect historic properties and to give the Advisory Council on Historic Preservation an opportunity to comment. The OHPO did not object to the proposed amendment. Rather the OHPO commented that, since the proposed amendment will affect mining operations within a permit area which would have already been subjected to the section 106 review process, the proposed changes do not appear to have a direct bearing on this process. The Director notes that the proposed amendment concerns a performance standard and not a permitting action. Therefore, as long as the proposed amendment satisfies the performance standards requirements of 30 CFR parts 816 and 817, it may be approved.

2. The COCC responded and provided comments in support of the proposed amendment. In response, the Director notes that the proposed provisions referenced by the COCC are being approved.

3. The OMRA objected to Ohio's proposal that the vertical portion of the remaining highwall shall be located at least eight feet below the low-water line. The OMRA commented that this eight-foot minimum would not be conducive to creating additional wildlife habitats, that it would not allow for good impoundments in certain areas, and that eight feet was an artificial figure. The Director disagrees. SMCRA at section 515(b)(8) and 30 CFR 816/817.49(a)(9) require that the final grading must provide adequate safety and access for proposed users. As discussed in the above findings, Ohio is exceeding the recommended depth of six feet for human accessibility, the safety of swimmers, and the postmining land use. Eight feet is not an artificial number because it ensures that the water level will be well over the head of an individual whose height exceeds six feet. Anyone over six feet tall would already be treading water by the time he/she reached the eight-foot depth and thus would not be surprised by a sudden drop-off. The Director has determined that Ohio's proposed rules are no less effective than the Federal rules.

Agency Comments

Pursuant to section 503(b) of SMCRA and the implementing regulations at 30 CFR 732.17(h)(11)(i), comments were solicited from various Federal agencies with an actual or potential interest in the Ohio program. The U.S. Department of Agriculture, Soil Conservation Service, and the U.S. Army Corps of Engineers responded that they had no comments. The U.S. Department of Labor, Mine Safety and Health Administration, commented that the proposed amendment did not conflict with MSHA's regulations. No other comments were received.

V. Director's Decision

Based on the above findings, the Director is approving Ohio Program Amendment Number 53, as submitted by Ohio on September 10, 1991, and revised and submitted by letters dated December 17, 1991, and April 27, 1992.

The Federal regulations at 30 CFR part 935 codifying decisions concerning the Ohio program are being amended to implement this decision. This final rule is being made effective immediately to expedite the State program amendment process and to encourage States to conform their programs with the Federal standards without undue delay. Consistency of State and Federal standards is required by SMCRA.

EPA Concurrence

Under 30 CFR 732.17(h)(11)(ii), the Director is required to obtain the written concurrence of the Administrator of the Environmental Protection Agency (EPA) with respect to any provisions of a State program amendment which relate to air or water quality standards promulgated under the authority of the Clean Water Act (33 U.S.C. 1251 *et seq.*) or the Clean Air Act (42 U.S.C. 7401 *et seq.*). The Director has determined that this amendment contains no such provisions and that EPA concurrence is therefore, unnecessary.

VI. Procedural Determinations

National Environmental Policy Act

The Secretary has determined that, pursuant to section 702(d) of SMCRA, 30 U.S.C. 1292(d), no environmental impact statement need be prepared on this rulemaking.

Executive Order No. 12291 and the Regulatory Flexibility Act

On July 12, 1984, the Office of Management and Budget (OMB) granted OSM an exemption from sections 3, 4, 7, and 8 of Executive Order 12291 for actions related to approval or conditional approval of State regulatory programs. Therefore, preparation of a regulatory impact analysis and OMB regulatory review is not required.

The Department of the Interior has determined that this rule will not have a significant economic impact on a substantial number of small entities under the Regulatory Flexibility Act (5 U.S.C. 601 *et seq.*). The State submittal which is the subject of this rule is based upon counterpart Federal regulations for which an economic analysis was prepared and certification made that such regulations would not have a significant economic effect upon a substantial number of small entities. Hence, this rule will ensure that existing requirements previously promulgated by OSM will be implemented by the State. In making the determination as to whether this rule would have a significant economic impact, the Department relied upon the data and assumption for the counterpart Federal regulations.

Executive Order 12778

The Department of the Interior has conducted the reviews required by section 2 of Executive Order 12778 and has determined that, to the extent allowed by law, this rule meets the applicable standards of subsections (a) and (b) of that section. However, these standards are not applicable to the actual language of State regulatory programs and program amendments since each such program is drafted and promulgated by a specific State, not by OSM. Under section 503 and 505 of SMCRA (30 U.S.C. 1253 and 1255) and 30 CFR 730.11, 732.15, and 732.17(h)(10), decisions on proposed State regulatory programs and program amendments submitted by the State must be based

solely on a determination of whether the submittal is consistent with SMCRA and its implementing Federal regulations and whether the requirements of 30 CFR part 730, 731, and 732 have been met.

Paperwork Reduction Act

This rule does not contain information collection requirements which require approval by the Office of Management and Budget under 44 U.S.C. 3507.

List of Subjects in 30 CFR Part 935

Intergovernmental relations, Surface mining, Underground mining.

Dated: July 16, 1992.

Jeffrey D. Jarrett,

Acting Assistant Director, Eastern Support Center.

For the reasons set out in the preamble, title 30, chapter VII, subchapter T of the Code of Federal Regulations is amended as set forth below:

PART 935—OHIO

1. The authority citation for part 935 continues to read as follows:

Authority: 30 U.S.C. 1201 *et seq.*

2. In § 935.15, a new paragraph (fff) is added to read as follows:

§ 935.15 Approval of regulatory program amendments.

* * * * *

(fff) The following amendment to the Ohio regulatory program, as submitted to OSM on September 10, 1991, and revised on December 17, 1991, and April 27, 1992, is approved, effective August 18, 1992: Revised Amendment Number 53 which consists of revisions to the Ohio Administrative Code (OAC) at 1501:13-9-04 (H)(1)(i), (H)(2)(d), (H)(2)(e), (H)(2)(g), and (H)(2)(h) concerning the characteristics of highwalls which are not entirely eliminated in areas to be covered by impoundments.

[FR Doc. 92-19569 Filed 8-17-92; 8:45 am]

BILLING CODE 4310-05-M

---

30 CFR Part 935

Ohio Regulatory Program; Revision of Administrative Rule

AGENCY: Office of Surface Mining Reclamation and Enforcement (OSM), Interior.

ACTION: Final rule; approval of amendment.

SUMMARY: OSM is announcing the approval, with one exception, of proposed Revised Program Amendment Number 51 to the Ohio permanent regulatory program (hereinafter referred to as the Ohio program) under the Surface Mining Control and Reclamation Act of 1977 (SMCRA). The amendment is intended to authorize the use of excess spoil from a valid, permitted coal mining operation for the reclamation of an adjacent unreclaimed area.

EFFECTIVE DATE: August 18, 1992.

FOR FURTHER INFORMATION CONTACT: Mr. Richard J. Seibel, Director, Columbus Field Office, Office of Surface Mining Reclamation and Enforcement, 2242 South Hamilton Road, Room 202, Columbus, Ohio 43232; (614) 866-0578.

SUPPLEMENTARY INFORMATION:

I. Background on the Ohio Program.
II. Submission of Amendment.
III. Director's Findings.
IV. Summary and Disposition of Comments.
V. Director's Decision.
VI. Procedural Determinations.

I. Background on the Ohio Program

On August 16, 1982, the Secretary of the Interior conditionally approved the Ohio program. Information on the general background of the Ohio program submission, including the Secretary's findings, the disposition of comments, and a detailed explanation of the conditions of approval of the Ohio program, can be found in the August 10, 1982, **Federal Register** (47 FR 34688). Subsequent actions concerning the conditions of approval and program amendments are identified at 30 CFR 935.11, 935.12, 935.15, and 935.16.

II. Submission of Amendment

By letter dated July 9, 1991 (Administrative Record Number OH-1546), the Director of OSM provided the Ohio Department of Natural Resources, Division of Reclamation (Ohio), with clarification concerning OSM's position on the reclamation of abandoned mine lands by a mine operator in conjunction with surface coal mining and reclamation operations. Specifically, the Director's purpose was to provide guidelines to states that were interested in reclaiming abandoned mine lands using excess spoil from adjacent areas where mining is conducted under permits issued pursuant to Title V of SMCRA or its state equivalent. The Director noted that a contract for reclamation approved under Title IV of SMCRA (or under an equivalent State Abandoned Mine Lands (AML) program) is equivalent to a permit and bond and is thus consistent with the excess spoil disposal requirements of section 515 of SMCRA. Therefore, the placement of excess spoil on an abandoned site which is receiving Federal AML funds is not inconsistent with section 515(b)(22) of SMCRA (55 FR 21329). State programs which issue such contracts under a non-Federally funded program must provide a degree of security comparable to that afforded by a Federally funded AML reclamation project. Before issuing such contracts, States must first submit and receive OSM approval of the State policies and procedures applicable to such non-Federally funded contracts.

In response to the Director's letter, Ohio submitted proposed Program Amendment Number 51 by letter dated July 22, 1991 (Ohio Administrative Record No. OH-1547). The amendment proposed to add a new paragraph (H) to Ohio Administrative Code (OAC) section 1501:13-9-07 to authorize the use of excess spoil from a valid, permitted coal mining operation for the reclamation of an adjacent unreclaimed area. As part of and in support of proposed Program Amendment Number 51, Ohio also submitted Administrative Record information on the relevant provisions of the Ohio Revised Code (ORC), a draft policy statement clarifying eligibility requirements, performance standards for off-permit spoil placement, and an example of a reclamation contract executed pursuant to section 1513.27 of the ORC.

OSM announced receipt of proposed Program Amendment Number 51 in the August 9, 1991 **Federal Register** (56 FR 37871), and, in the same notice, opened the public comment period and provided opportunity for a public hearing on the adequacy of the proposed amendment. The public comment period ended on September 9, 1991. The public hearing scheduled for September 3, 1991, was not held as no one requested an opportunity to testify.

By letter dated January 10, 1992 (Ohio Administrative Record No. OH-1627), OSM provided Ohio with its questions and comments about the July 22, 1991, amendment submissions. By letter dated April 27, 1992 (Ohio Administrative Record No. OH-1687), Ohio responded to OSM's questions and comments and provided Revised Program Amendment Number 51. This new amendment submission contains one revised rule, revised Administrative Record information, and a revised policy statement. All of the revisions concern the disposal of excess spoil on unpermitted areas adjacent to a coal mining permit.

In its April 27, 1992, submittal, Ohio is further revising OAC section 1501:13-9-

07 paragraph (H) to delete reference to ORC section 1513.18 concerning reclamation of permanent program sites for which bonds have been forfeited by Ohio. The effect of this deletion is that Ohio no longer proposes to allow the placement of excess spoil from a validly permitted site onto an unreclaimed adjacent site formerly permitted under Ohio's permanent surface mining program, but for which the performance bond has been forfeited. The additional policy and clarifying information contained in the April 27, 1992, cover letter provided by Ohio cover the topics of eligibility of projects for State or Federal AML funding, creation of fills in excess of approximate original contour (AOC), facilitation of mining, monitoring during and after construction, reclamation standards, contractor incentives, bond forfeiture, and environmental review of proposed excess spoil placement sites.

OSM announced receipt of Revised Program Amendment Number 51 in the June 2, 1992 **Federal Register** (57 FR 23176), and, in the same notice, opened the public comment period and provided opportunity for a public hearing on the adequacy of the proposed amendment. The public comment period ended on June 17, 1992. The public hearing scheduled for June 12, 1992, was not held as no one requested an opportunity to testify.

III. Director's Findings

Set forth below, pursuant to SMCRA and the Federal regulations at 30 CFR 732.15 and 732.17, are the Director's findings concerning the proposed amendment to the Ohio program. Revisions which are not discussed below correct paragraph letter notations or make minor nonsubstantive language changes to improve the clarity of the rules.

Along with an accompanying written policy document, Ohio is proposing to add a new paragraph (H) to OAC 1501:13–9–07 to allow the use of excess spoil from a permitted coal mining operation for the reclamation of an adjacent, unreclaimed area provided that the excess spoil is placed (1) in an environmentally and technically sound manner and (2) where it will not destroy or degrade features of environmental value. The proposed amendment provides for off-permit placement of excess spoil on unreclaimed areas which meet the eligibility requirements of Ohio Revised Code (ORC) sections 1513.27 or 1513.37. ORC section 1513.27 governs reclamation, with State funds, of sites affected by mining before April 10, 1972. ORC section 1513.37 governs reclamation, with Federal AML funds, of sites mined, abandoned, and left unreclaimed prior to August 3, 1977, the effective date of SMCRA.

In his July 9, 1991, letter to Ohio the Director of OSM clarified OSM's position concerning the standards and requirements which apply to the usage of excess spoil for reclamation of abandoned mine land sites. OSM focused on the parameters for excess spoil disposal outside the permit area as established, in part, in several final rules approving such a provision in the West Virginia program (45 FR 69254–69255, October 20, 1980; 46 FR 5919, January 21, 1981; and 55 FR 21328–21329, May 23, 1990).

In the January 21, 1981, West Virginia final rule (46 FR 5919), the Secretary found that, for purposes of excess spoil disposal, a reclamation contract governing work to be performed on a Federal AML reclamation grant project is the equivalent of permit and bond under title V of SMCRA. In the May 23, 1990, final rule (55 FR 21329), OSM found that disposal of excess spoil on a Federally funded AML reclamation project is approvable provided the spoil is not necessary to restore AOC on or otherwise reclaim the active mine; nor can the placement of spoil off-permit facilitate the mining operation on the permitted area. In addition, as stated in the May 23, 1990, final rule, fills are not to be created on AML reclamation projects. Spoil deposited on such sites may be used only to complete reclamation and to return the site to its AOC. OSM restricted eligibility for such spoil deposition to AML reclamation projects funded through the Federal AML grant process. The May 23, 1990, finding, however, did not prohibit the use of "no-cost reclamation" contracts allowing spoil disposal on AML sites not included in Federally funded grants. Procedures for such contracts would need specific OSM approval to ensure meaningful performance incentives and valid environmental and technical performance requirements. Any proposed amendment authorizing excess spoil disposal on AML sites via no-cost reclamation contracts must provide a degree of security comparable to that afforded by a Federally funded AML reclamation project.

In further elaborating upon OSM's rationale for limiting West Virginia's off-site spoil disposal to approved AML reclamation grant projects, the Director's July 9, 1991, letter states that this limiting stipulation is meant to ensure that:

(1) Only eligible sites are considered;

(2) Projects are properly planned in accordance with Federal grant application requirements;

(3) Projects are conducted in accordance with Federal grant terms and conditions;

(4) Projects are monitored by the State during and after construction;

(5) Projects are completed;

(6) If failures develop after completion, funds will be available to take corrective action (this provision is an essential substitute for the performance bond requirements of title V);

(7) The environmental safeguards and other provisions of the March 6, 1980, "Guidelines for Reclamation Programs and Projects" (45 FR 14810–14819) will receive consideration; and

(8) Sites will be subject to OSM oversight.

These specific criteria, in addition to the parameters established in the referenced West Virginia final rules, constitute the review criteria for State-proposed provisions allowing off-permit spoil deposition.

Ohio has submitted proposed Policy/Procedure Directive 92 (PPD) to clarify the eligibility requirements and performance standards applicable to off-permit placement of excess spoil. The PPD, together with the April 27, 1992, cover letter, describe, as follows, the methods and procedures by which Ohio intends to implement the proposed rule at OAC 1501:13–9–07(H).

1. Eligibility Requirements

Excess spoil from an active coal mining operation may be used to reclaim an adjacent state AML or Federal AML project under a direct negotiated, no-cost, or competitively bid contract executed pursuant to Ohio Revised Code section 1513.27 or 1513.37. The adjacent unreclaimed area must be referenced in the permit application at the time of issuance or later by amendment and identified on the permit map. The unreclaimed area will not be included in the permit acreage, will not be subject to the requirements for performance bond, and will not delay or otherwise affect bond release on the permitted area.

2. Eligibility of Projects for State or Federal AML Funding

Once an AML area has been identified for reclamation using off-permit placement of excess spoil, there is no difference in design, construction or contract provisions based on the area's eligibility for State or Federal AML funds. However, in the event of failure at a State AML site that may occur after a project is accepted as final, funds necessary to correct the reclamation failure shall be drawn from

the Unreclaimed Lands Fund, subject to review and approval by the Board on Unreclaimed Strip Mined Lands. For reclamation failure at a Federal AML site after the project is accepted as final and the final payments have been made, Ohio's AML grant allocations would constitute one source of funds available to correct reclamation failure.

3. Backfilling Abandoned Mine Areas

Construction of a "fill" on the off-permit area would be allowed only in the event that an engineer certifies that construction of a "fill" is necessary to establish positive drainage. Such "fills" would include diversions or underdrains, as necessary, to control erosion, prevent water infiltration into the fill, and ensure stability.

OSM concurs with Ohio that certain backfilling is necessary to fill in areas with internal drainage that were created as a result of the mining operations. The most likely reason for construction of such a "fill" will be to eliminate holes or depressions caused by erosion or other factors during the mining operations. However, these "fills" will not contain excess spoil beyond that amount needed to restore the area to its AOC and to establish positive drainage (i.e., drainage away from the AML site). In addition, no "fill" will be constructed solely for the purpose of excess spoil disposal. In other words, the excess spoil used on the AML area must be necessary for the reclamation of that area. Finally, where "fills" are constructed to eliminate depressions which impound water, elimination of the depressions must be performed in accordance with section 404 of the Clean Water Act (CWA) (33 U.S.C. 1344). The Director notes that Ohio has used the word "fill" to describe the practice of using excess spoil to return holes or depressions to their premining surface levels. It is important that these "fills" not be confused with valley, head-of-hollow or durable rock fills which are constructed solely for the purpose of excess spoil disposal, and which must comply with all permanent program design and performance standards. Valley, head-of-hollow or durable rock fills will not be allowed on the off-permit areas which are the focus of this proposed program amendment.

4. Facilitation of Mining

The spoil material removed from the permitted area and placed in the unreclaimed area must not be necessary for the achievement of approximate original contour on the permitted area nor can the placement of spoil off-permit facilitate the mining operation on the permitted area by providing additional area solely for spoil disposal or maneuvering of equipment. The excess spoil must be placed in an environmentally and technically sound manner, and in an area where it will not destroy or degrade features of environmental value.

5. Monitoring During and After Construction

The State AML Program Inspector will be primarily responsible for monitoring reclamation of the off-permit AML area to ensure that the reclamation work is performed in accordance with the contract. Such monitoring will be conducted as described in section 5.6 of the AML Procedures Manual (Administrative Record Number OH-1720). The Regulatory Inspector assigned to the adjacent permit area shall assist the AML Inspector, as requested, and shall notify the AML Inspector when reclamation activities commence on the off-permit area. In the event an operator/contractor fails to meet the terms of the contract, the AML Program Inspector will issue a Field Order to Stop Work. The AML Program Inspector will notify the Regulatory Program Inspection and Enforcement Manager, as well as the AML Field Supervisor of the issuance of the order. Post-construction review monitoring of the off-permit AML area will be conducted as described in section 5.10 of the AML Procedures Manual (Administrative Record Number OH-1726).

6. Reclamation Standards

Reclamation of off-permit AML areas shall be planned and performed in accordance with the standards and requirements enumerated in Section C of OSM's March 6, 1980, "Guidelines for Reclamation Programs and Projects" (45 FR 14810-14819). The final configuration of the off-permit AML area shall be suitable for the post-reclamation land use and compatible with the natural surroundings. Other specific standards for placement of the spoil on abandoned mine lands will be contained in the construction contracts.

7. Contractor Incentives

The Ohio Division of Reclamation (Division) may assess liquidated damages or require the off-permit area to be permitted and bonded, if appropriate, in the event of operator default on the off-site area. The Chief of the Division shall determine, based on the nature and severity of the failure to comply with the contract and the operator's compliance record on the adjacent permit area, whether to terminate the contract and assess liquidated damages in the amount of $2,500 per acre affected by the operator, or to terminate the contract and issue a Notice of Violation requiring the operator to revise the permit boundary to include any off-site acreage affected by the operator to facilitate mining and to post bond in the amount of $2,500 per acre, which is the bond amount required for all surface mining permits issued pursuant to Ohio's permanent program. These contractor incentive provisions are intended to satisfy the requirements of the Director's July 9, 1991, letter to Ohio (Administrative Record Number OH-1546) that no-cost reclamation contracts contain "meaningful performance incentives."

In the event of forfeiture of the coal mining permit with which an off-permit AML area is associated, any off-permit area which was improperly used to facilitate coal mining on the permit area will be included in the bond forfeiture. For all other portions of the AML site, the Division will proceed with the appropriate contract remedies, including liquidated damages and contract termination.

8. Environmental Review

An environmental review will be conducted by a Permitting or Special Studies Environmental Specialist (ES) to determine whether any of the following exist on the unreclaimed area: cultural or historic resources; wetlands or stable impoundments with good water quality; federal or state endangered or threatened plant or animal species, or their critical habitats; plant communities or habitat types unique to the region or possessing particular value or productivity; or any other desirable environmental or socioeconomic quality of high value, utility or uniqueness. If the unreclaimed area is located in a floodplain or within 1,000 feet of the normal waterline of a designated wild or scenic river, this information shall be noted in the environmental review and considered in the design process.

The environmental review findings will be documented by the ES and, if any of the features described above exist, the ES shall recommend mitigatory or enhancement measures, if appropriate, or avoidance of the area. Such recommendations shall, at a minimum, conform with protections afforded these areas by state or federal law. The ES may consult with state or federal agencies, such as the ODNR Division of Natural Areas and Preserves or the State Historic Preservation Office, when developing recommendations for mitigation. The recommended mitigatory or enhancement measures shall be included in the contract specifications.

The Director has determined that the Ohio proposed regulations, PPD, Administrative Record Document, and April 27, 1992, cover letter contain guidelines and safeguards for Federally funded AML sites, State-funded AML sites, and "no-cost" sites which are similar in purpose and function to a surface mining permit and accompanying performance bond. However, as stated in the May 23, 1990, final rule, fills are not to be created on AML reclamation projects (55 FR 21329). In addition, section 515(b)(22)(B) of SMCRA does not allow the creation of fills on AML Reclamation projects. Spoil deposited on such sites may be used only to complete reclamation and to return the site to its AOC. Ohio's reference to "fills" in its PPD refers only to disposal areas which will contain only enough excess spoil to accomplish restoration of the area to AOC. As such, these "fills" are not the same as valley, head-of-hollow or durable rock fills which are constructed solely for the purpose of excess spoil disposal. Since any "fills" to be constructed on AML sites in Ohio are for reclamation purposes only, and since the amount of spoil placed in these "fills" cannot exceed the amount needed to restore the area to AOC and to create positive drainage, construction of such "fills" does not conflict with the May 23, 1990, final rule. The Director is not, however, approving the construction of fills on the off-permit area which would include more excess spoil than is needed to return the area to AOC. Since there is no Federal counterpart to this rule and its inclusion does not render the Ohio program less effective than the Federal regulations, the Director finds the proposed amendment, proposed PPD, and Administrative Record information to be not inconsistent with the requirements of SMCRA, the Federal regulations, except as noted above with regard to "fills." Further, the Director finds that Ohio's no-cost provisions meet the requirements of the July 9, 1991, letter to Ohio from the Director (Administrative Record Number OH–1546).

IV. Summary and Disposition of Comments

Public Comments

The public comment period and opportunity to request a public hearing announced in the August 9, 1991, **Federal Register** (56 FR 37871) closed on September 9, 1991. No public comments were received and the scheduled public hearing was not held as no one requested an opportunity to provide testimony.

The public comment period was subsequently reopened and announced in the June 2, 1992, **Federal Register** (57 FR 23176). The public comment period closed on June 17, 1992. The Ohio Mining and Reclamation Association (OMRA) responded and provided comments in support of the proposed amendment. In response, the Director notes that the proposed provisions referenced by the OMRA are being approved. The scheduled public hearing was not held as no one requested an opportunity to provide testimony.

Agency Comments

Pursuant to section 503(b) of SMCRA and the implementing regulations at 30 CFR 732.17(h)(11)(i), comments were solicited from various Federal agencies with an actual or potential interest in the Ohio Program. The U.S. Department of Agriculture, Soil Conservation Service, the U.S. Department of Labor, Mine Safety and Health Administration, U.S. Department of Labor, and the U.S. Army Corps of Engineers responded that they had no comments on the proposed amendment.

The U.S. Environmental Protection Agency concluded that the proposed amendment to Ohio's program demonstrates the legal authority, administrative capability, and the technical conformity with controlling National Pollutant Discharge Elimination System (NPDES) regulations necessary to maintain water quality standards promulgated under the authority of the CWA, as amended (33 U.S.C. 1251 *et seq.*).

No other comments were received.

V. Director's Decision

Based on the above findings, the Director is approving Ohio Revised Program Amendment Number 51, originally submitted by Ohio as Program Amendment Number 51 on July 22, 1991, and revised and submitted by letter dated April 27, 1992. The creation of fills on unpermitted AML sites is approved only to the extent that the fills are created for reclamation purposes only and not merely to provide an area for excess spoil disposal, that the amount of excess spoil placed in the fill area does not exceed the amount necessary to restore the area to AOC, and that the elimination of holes or depressions which impound water is accomplished in accordance with section 404 of the CWA (33 U.S.C. 1344). The construction of valley, head-of-hollow, durable rock or any other type of fill which would include more excess spoil than is needed to restore the off-permit area to AOC is not approved. The Federal regulations at 30 CFR Part 935 codifying decisions concerning the Ohio program are being amended to implement the decision. This final rule is being made effective immediately to expedite the State program amendment process and to encourage States to conform their programs with the Federal standards without undue delay. Consistency of State and Federal standards is required by SMCRA.

EPA Concurrence

Under 30 CFR 732.17(h)(11)(ii), the Director is required to obtain the written concurrence of the Administrator of the Environmental Protection Agency (EPA) with respect to any provisions of a State program amendment which relate to air or water quality standards promulgated under the authority of the Clean Water Act (33 U.S.C. 1251 *et seq.*) or the Clean Air Act (42 U.S.C. 7401 *et seq.*). The Director has determined that this amendment contains no such provisions and that EPA concurrence is, therefore, unnecessary. However, by letter dated February 3, 1992 (Administrative Record Number OH–1642), EPA submitted its concurrence.

VI. Procedural Determinations

National Environmental Policy Act

The Secretary has determined that, pursuant to section 702(d) of SMCRA, 30 U.S.C. 1292(d), no environmental impact statement need be prepared on this rulemaking.

Executive Order No. 12291 and the Regulatory Flexibility Act

On July 12, 1984, the Office of Management and Budget (OMB) granted OSM an exemption from sections 3, 4, 7, and 8 of Executive Order 12291 for actions related to approval or conditional approval of State regulatory programs. Therefore, preparation of a regulatory impact analysis and OMB regulatory review is not required.

The Department of the Interior has determined that this rule will not have a significant economic impact on a substantial number of small entities under the Regulatory Flexibility Act (5 U.S.C. 601 *et seq.*). The State submittal which is the subject of this rule is based upon counterpart Federal regulations for which an economic analysis was prepared and certification made that such regulations would not have a significant economic effect upon a substantial number of small entities. Hence, this rule will ensure that existing requirements previously promulgated by OSM will be implemented by the State. In making the determination as to whether this rule would have a significant economic impact, the

Department relied upon the data and assumption for the counterpart Federal regulations.

Executive Order 12778

The Department of the Interior has conducted the reviews required by section 2 of Executive Order 12778 and has determined that, to the extent allowed by law, this rule meets the applicable standards of subsections (a) and (b) of that section. However, these standards are not applicable to the actual language of State regulatory programs and program amendments since each such program is drafted and promulgated by a specific State, not by OSM. Under section 503 and 505 of SMCRA (30 U.S.C. 1253 and 1255) and 30 CFR 730.11, 732.15, and 732.17(h) (10), decisions on proposed State regulatory programs and program amendments submitted by the State must be based solely on a determination of whether the submittal is consistent with SMCRA and its implementing Federal regulations and whether the requirements of 30 CFR part 730, 731, and 732 have been met.

Paperwork Reduction Act

This rule does not contain information collection requirements which require approval by the Office of Management and Budget under the Paperwork Reduction Act 44 U.S.C. 3507 *et seq.*

List of Subjects in 30 CFR Part 935

Intergovernmental relations, Surface mining, Underground mining.

Dated: July 10, 1992.

Jeffrey D. Jarrett,

Acting Assistant Director, Eastern Support Center.

For the reasons set out in the preamble, title 30, chapter VII, subchapter T of the Code of Federal Regulations is amended as set forth below:

PART 935—OHIO

1. The authority citation for part 935 continues to read as follows:

Authority: 30 U.S.C. 1201 *et seq.*

2. In Section 935.15, a new paragraph (eee) is added to read as follows:

§ 935.15 Approval of regulatory program amendments.

* * * * *

(eee) The following amendment to the Ohio regulatory program, as submitted to OSM on July 22, 1991, and revised and resubmitted on April 27, 1992, is approved except as noted below, effective August 18, 1992. Revised Amendment Number 51 which consists of revisions to the Ohio Administrative (OAC) at 1501:13-9-07 paragraph (H), a Policy/Procedure Directive, an Administrative Record Document, and the April 27, 1992, cover letter to the Revised Amendment Number 51, all concerning the use of excess spoil from a valid, permitted coal mining operation for the reclamation of an adjacent, unreclaimed area. Construction of "fills" on adjacent unreclaimed areas is approved only insofar as such "fills" are constructed for reclamation purposes only and not merely to provide an area for excess spoil disposal, the amount of excess spoil placed in the area does not exceed the amount necessary to restore the area to AOC, and the elimination of any holes or depressions which impound water is accomplished in accordance with section 404 of the Clean Water Act (33 U.S.C. 1344). The construction of valley, head-of-hollow, durable rock, or any other type of fill which would include more excess spoil than is needed to return the off-permit area to AOC is not approved.

[FR Doc. 92-19576 Filed 8-17-92; 8:45 am]

BILLING CODE 4310-05-M

DEPARTMENT OF DEFENSE

Department of the Navy

32 CFR Part 701

[Secretary of the Navy Instruction 5211.5]

Availability of Department of the Navy Records and Publication of Navy Documents Affecting the Public

AGENCY: Department of the Navy, DOD.

ACTION: Final rule.

SUMMARY: The Department of the Navy is publishing a system name change to an exempt system of records at 32 CFR 701.119. The system of records was amended on July 28, 1992, at 57 FR 33326.

EFFECTIVE DATE: August 18, 1992.

FOR FURTHER INFORMATION CONTACT: Mrs. Gwen Aitken (703) 614-2004.

SUPPLEMENTARY INFORMATION:

Executive Order 12291

The Director, Administration and Management has determined that this proposed rule is not a major rule. Analysis of the rule indicates that it does not have an annual effect on the economy of $100 million or more; does not cause a major increase in costs or prices for consumers, individual industries, Federal, State, or local government agencies, or geographic regions; and does not have a significant adverse effect on competition, employment, investment, productivity, or innovation.

Regulatory Flexibility Act of 1980

The Director, Administration and Management certifies that this rule is not subject to the Regulatory Flexibility Act (5 U.S.C. 601) and does not have a significant impact on a substantial number of small entities.

Paperwork Reduction Act

The Director, Administration and Management certifies that this rule does not impose any reporting or record keeping requirements under the Paperwork Reduction Act of 1980 (44 U.S.C. 3501-3520).

List of Subjects in 32 CFR Part 701

Privacy.

For reasons set forth in the preamble, 32 CFR part 701 is amended as follows:

1. The authority citation for 32 CFR part 701, subpart G continues to read as follows:

Authority: Public Law 93-579, 88 Stat. 1896 (5 U.S.C. 552a).

2. Section 701.119 is amended by revising the paragraph (i), introductory text, and the first paragraph of (i)(1) as follows:

§ 701.119 Exempt Navy record systems.

* * * * *

(i) *Navy and Marine Corps Exchanges.*

(1) *ID-N04060-1.*

System Name. Navy and Marine Corps Exchange Security Files.

* * * * *

Dated: August 4, 1992.

L.M. Bynum,

Alternate OSD Federal Register Liaison Officer, Department of Defense.

[FR Doc. 92-18751 Filed 8-17-92; 8:45 am]

BILLING CODE 3810-01-M

ENVIRONMENTAL PROTECTION AGENCY

40 CFR Part 52

[IL22-1-5229; FRL-4194-9]

Approval and Promulgation of Implementation Plans; Illinois

AGENCY: Environmental Protection Agency (USEPA).

ACTION: Final rule.

SUMMARY: The USEPA is taking action to approve revisions to part 215, subpart T (Pharmaceutical Manufacturing) of title 35 of the Illinois Administrative Code (35 IAC) and to associated

definitions contained in part 211 of 35 IAC for the ozone attainment areas in Illinois. This action will have no effect on the requirements for ozone nonattainment areas in Illinois. Although the Clean Air Act (CAA) does not require States to adopt Reasonably Available Control Technology (RACT) regulations for attainment areas, the State has authority under section 116 of the CAA to adopt regulations consistent with the purpose of the CAA. Because the USEPA believes that this action is noncontroversial, it is being taken with no prior proposal.

Since the State submitted these rules on June 11, 1991, the State has revised and consolidated its Volatile Organic Compound (VOC) stationary source control measures for the Chicago and Metro East St. Louis ozone nonattainment areas into parts 218 and 219 of 35 IAC respectively. Therefore, the rules, which are the subject to today's rulemaking, have been superseded as they pertain to the Chicago and Metro East St. Louis ozone nonattainment areas. Consequently, USEPA's approval is limited to their applicability in the ozone attainment areas within Illinois. USEPA intends to rulemake on the stationary source control measures for the Chicago and Metro East St. Louis ozone nonattainment areas in a separate rulemaking.

USEPA's action is based upon a State Implemenetation Plan (SIP) revision request which was submitted by the State.

DATES: This action will be effective October 19, 1992, unless notice is received within 30 days that someone wishes to submit adverse or critical comments. If the effective date is delayed, timely notice will be published in the **Federal Register**.

ADDRESSES: Copies of the SIP revision request and USEPA's analysis are available for inspection at the following addresses: (It is recommended that you telephone Edward Doty at (312) 886-6057 before visiting the Region 5 office.) U.S. Environmental Protection Agency, Region 5, Air and Radiation Division, 77 West Jackson Boulevard, Chicago, Illinois 60604.

Written comments should be sent to: J. Elmer Bortzer, Chief, Regulations Development Section, Regulations Development Branch (AR-18J), U.S. Environmental Protection Agency, 77 West Jackson Boulevard, Chicago, Illinois 60604.

A copy of today's revision to the Illinois SIP is available for inspection at: U.S. Environmental Protection Agency, Public Information Reference Unit, 401 M Street, SW., Washington, DC 20460.

FOR FURTHER INFORMATION CONTACT: Edward Doty, Regulation Development Section, Regulation Development Branch (AR-18J), U.S. Environmental Protection Agency, 77 West Jackson Boulevard, Chicago, Illinois 60604, (312) 886-6057.

SUPPLEMENTARY INFORMATION:

I. Summary of State Submittal

On June 11, 1991, the Illinois Environmental Protection Agency (IEPA) submitted to USEPA a requested revision of the Illinois SIP dealing with the control of VOC emissions from pharmaceutical manufacturing operations. The requested SIP revision covers amendments of 35 Illinois Administrative Code (35 IAC) parts 211 and 215. These amendments were adopted in final form by the Illinois Pollution Control Board (IPCB) on April 25, 1991, and the final rule revision was published in the **Illinois Register** on May 24, 1991. The rule revision became state-effective on May 14, 1991. The discussion which follows outlines the rule amendments.

Section 211.122 (Definitions)

Section 211.122 has been amended to add the following definitions:

"Accelacota": A pharmaceutical coating operation which consists of a horizontally rotating perforated drum in which tablets are placed, a coating is applied by spraying, and the coating is dried by the flow of air across the drum through the perforations.

"Air suspension coater/dryer": A pharmaceutical coating operation which consists of vertical chamber in which tablets or particles are placed, and a coating is applied and then dried while the tablets or particles are kept in a fluidized state by the passage of air upward through the chambers.

"Enclose": With respect to Subpart T of 35 IAC, to cover any volatile organic liquid surface that is exposed to the atmosphere.

"Organic compound": Any compound of carbon, excluding carbon monoxide, carbon dioxide, carbonic acid, metal carbides or carbonates, and ammonium carbonate.

"Pharmaceutical coating operation": A device in which a coating is applied to a pharmaceutical, including any drying or curing of the coating.

"Plant": All of the pollutant emitting activities which belong to the same industrial grouping, are located on one or more contiguous or adjacent properties, and are under the control of the same person (or persons under common control), except the activities of any marine vessel. Pollutant emitting activities shall be considered as part of the same industrial grouping if they belong to the same major group (i.e., which have the same two digit source code) as described in the "Standard Industrial Classification Manual", 1987.

"Refrigerated condenser": A surface condenser in which the coolant supplied to the condenser has been cooled by a mechanical device, other than by a cooling tower or evaporative spray cooling, such as a refrigeration unit or steam chiller unit.

"Tablet coating operation": A pharmaceutical coating operation in which tablets are coated.

"Volatile Organic Material Content" or "VOMC": The emissions of volatile organic material which would result from the exposure of a coating, printing ink, fountain solution, tire spray, dry cleaning waste or other similar material to the air, including any drying or curing, in the absence of any control equipment. VOMC is typically expressed in units of kilograms of volatile organic material per liter (kg VOM/liter) (lb VOM/gallon) of coating or coating solids, or kg VOM/kg (lb VOM/lb) of coating solids, of coating material, or material.

Existing definitions in section 211.122, as amended, read as follows:

"Control device" is amended to include equipment, such as an afterburner, adsorber, scrubber, condenser, cyclone or baghouse used to remove or prevent the emission of air pollutants from a contaminated exhaust stream.

"Volatile organic material" is amended to mean any organic compound which participates in atmospheric photochemical reactions unless specifically exempted from this definition. For purposes of determining compliance with emission limits, volatile organic material shall be measured by the reference test methods incorporated by reference in 35 IAC section 211.105. Where such a method also inadvertently measures compounds with negligible photochemical reactivity, an owner or operator may exclude these negligibly reactive compounds. [The previous and current definitions listed negligibly photochemical reactive compounds that are acceptable to the USEPA.] [1]

[1] On February 3, 1992, (57 FR 3941) the USEPA finalized rulemaking on a revised definition of VOC. The compounds listed as negligibly reactive in Illinois' definition of "volatile organic material" are consistent with the compounds listed as nonreactive in USEPA's revised definition of VOC.

Section 215.102 (Testing Methods)

Section 215.102 (Testing Methods) is amended to remove the requirements for the measurement of vapor pressures.

Section 215.105 (Incorporation by Reference)

Section 215.105 (Incorporation by Reference) is amended to add updated testing procedures and new references related to emissions from pharmaceutical manufacturing. The following documents are added for incorporation by reference:

Elsevier Scientific Publishing company, New York, "The Vapor Pressure of Pure Substances" (1973), Boublik, T., Fried, and Hala, E.;

McGraw-Hill Book Company, *Perry's Chemical Engineer's Handbook* (1984);

Chemical Rubber Publishing Company, *CRC Handbook of Chemistry and Physics* (1968–1987);

McGraw-Hill Book Company, *Lange's Handbook of Chemistry* (1985), Dean, J., editor; and

United States Environmental Protection Agency, Research Triangle Park, North Carolina, "Control of Volatile Organic Emissions from Manufacture of Synthesized Pharmaceutical Products", (December 1978, EPA–450/2–78–029).

Section 215.108 (Measurement of Vapor Pressures)

Section 215.108 (Measurement of Vapor Pressures) has been added to the rules to cover the vapor pressure measurement regulations removed from section 215.102. In addition, the vapor pressure measurement requirements have been modified. New rules have been added to make a distinction between the measurement of vapor pressures for Volatile Organic Liquids (VOL), organic materials or solvent, and Volatile Organic Material (VOM). Within each category of material (or solvent or liquid), a distinction is made between materials made up of only one compound and materials made up of multiple compounds. For organic materials, distinction is also made between organic materials containing only organic material compounds and organic materials containing some non-organic material compounds. For VOM, distinction is made between materials containing only VOM and materials also containing some non-VOM material.

If a VOL consists of only a single compound, the vapor pressure may be determined by the use of ASTM Method D2879–86 or an applicable method obtained from a published source, such as "The Vapor Pressure of Pure Substances", "Perry's Chemical Engineer's Handbook", "CRC Handbook of Chemistry and Physics", or "Lange's Handbook of Chemistry". If the VOL is a mixture of compounds, the total vapor pressure is determined by summing the partial vapor pressures (determined for each compound using the test method or references used for a single compound VOL) on a mole fraction basis.

If an organic material or solvent consists of only one compound, the vapor pressure shall be determined by the use of the test method or references listed for the single compound VOL. If the organic material or solvent contains a mixture of both organic compounds and non-organic compounds, the vapor pressure shall be determined by summing the partial vapor pressures of the organic compounds (determined for each compound using the test method or references used for a single compound VOL) weighted by the mole fractions of the organic compounds. If the organic material or solvent contains only organic compounds, the vapor pressure shall be determined by the use of the test method ASTM Method D2879–86 or by the method used for organic compound/non-organic compound mixtures. These test methods are expected to give equivalent results.

The vapor pressure of a VOM shall be determined using procedures equivalent to those applied for organic materials or solvents.

Section 215.480 (Applicability of Subpart T)

Subsection 215.480(a) is amended to change the reference to "coating operations" to more specifically "pharmaceutical coating operations". In addition, this section is amended to exempt emission sources from the requirements of subpart T (except for sections 215.483 through 215.485) if the sources emit less than 2,268 kg/year (2.5 tons/year) of VOM and less than 45.4 kg/day (100 pounds/day) of VOM.

Subsection 215.480(b) is amended to state that the air suspension coater/dryer, fluid bed dryers, tunnel dryers, and Accelacotas located in Libertyville Township, Lake County, Illinois shall be exempt from the rules of subpart T (except for sections 215.483 through 215.485) if the emissions of VOM not vented to air pollution control equipment do not exceed the following levels: 2,268 kg/year for the air suspension coater/dryer; 4,535 kg/year for each fluid bed dryer; 6,803 kg/year for each tunnel dryer; and 6,903 kg/year for each Accelacota.

The following subsections have been added to section 215.480:

(e) This subsection requires emissions subject to subpart T to be controlled at all times in a manner consistent with the requirements of subpart T;

(f) This subsection requires emission control devices required by section 215.483 to be operated at all times;

(g) This subsection requires emission sources subject to the requirements of sections 215.481, 215.482 or 215.486 on or after the compliance date specified in subsection 215.490(a) to remain subject to these requirements even if the emissions from the sources drop below the applicability criteria of section 215.480;

(h) This subsection requires the determination of daily and/or annual emission rates to be based on the hourly emission rates or on the emissions per unit of throughput and the recording of appropriate daily and annual source operations, material throughput rates, or material consumption rates. In the absence of representative test data pursuant to section 215.487, rates of emissions shall be determined using engineering calculations, including the methods described in appendix B of "Control of Volatile Organic Emissions from Manufacture of Synthesized Pharmaceutical Products". The IEPA reserves the right to require other emissions tests pursuant to section 215.487.

Section 215.481 (Control of Reactors, Distillation Units, Crystallizers, Centrifuges, and Vacuum Dryers)

Subsection 215.481(a) has been amended to allow the use of emission control equipment other than surface condensers for these sources. If a scrubber, carbon adsorber, thermal incinerator, catalytic incinerator or other air pollution control equipment (other than a surface condenser) is used, such equipment shall provide a VOM emission reduction of 90 percent or more. Subsection 215.481(b) has been amended to allow less than full enclosure of centrifuges when production, sampling, maintenance, or inspection procedures require operator access. Subsection 215.481(b) requires the enclosure of centrifuges used to manufacture pharmaceuticals, where volatile organic liquids in the centrifuges are exposed to the air outside of the centrifuges and the VOM in the liquids have a total vapor pressure of 3.45 kiloPascals or more at a temperature of 294.3 degrees Kelvin.

Section 215.482 (Control of Air Dryers, Production Equipment Exhaust Systems and Filters)

Subsection 215.482(b), which requires enclosures for certain rotary vacuum filters and other filters used to manufacture pharmaceuticals, has been amended to allow less than full

enclosure when production, sampling, maintenance, or inspection procedures require operator access.

Section 215.483 (Material Storage and Transfer)

Subsection 215.483(a) has been amended to remove an allowance for the use of equivalent emission control systems in the control of VOM emissions from truck and railcar deliveries to storage tanks with capacities equal to or greater than 7.57 cubic meters (2,000 gallons) that store organic liquids with vapor pressures greater than 28.0 kiloPascals (4.1 psi) at 294.3 degrees Kelvin (70 degrees Fahrenheit). Only vapor balance systems are allowed in such situations.

Subsection 215.483(b) has been modified to require the operation and maintenance of pressure/vacuum vents on storage tanks that store volatile organic liquids. This subsection has also been amended to allow pressure/vacuum conservation vents set at pressures exceeding 0.2 kiloPascals (0.03 psi). In addition, the allowance for equivalent control devices has been removed from this subsection.

Section 215.487 (Testing)

Subsection 215.487(a) has been amended to require the owner or operator of a VOM emission source to demonstrate compliance with subpart T requirements only upon the request of the IEPA. Sources exempted from the requirements of subpart T are also subject to the requirement to demonstrate compliance with the requirements of (or the validity of the exemption from) Subpart T.

Subsection 215.487(b) has been completely replaced by the requirement that a person planning to conduct a VOM emissions test, to demonstrate compliance with or to determine the applicability of provisions of subpart T, notify the IEPA of the intent to test not less than 30 calendar days prior to the planned initiation of the test.

Subsection 215.487(c) test procedures have been revised to the following:

(1) The determination of VOM concentrations shall be made by the use of 40 CFR part 60, appendix A, Methods 18, 25, or 25A as appropriate for the conditions at the site. The test method selection shall be based on consideration of the diversity of organic species present and their total concentration and on consideration of the potential presence of interfering gases. Except as indicated in subsections 215.487(c)(1)(A) and (B), the test must consist of three separate runs, each lasting a minimum of 60 minutes unless the IEPA determines that the source processes dictate shorter times.

(A) When the test is to be conducted to determine the efficiency of a fixed bed carbon adsorption system with a common exhaust stack for all individual adsorber vessels, the test must consist of three separate runs, with each run coinciding with one or more complete sequences through the adsorption cycles of all of the individual adsorber vessels.

(B) When the test is to be used to determine the efficiency of a fixed bed carbon adsorption system with individual exhaust stacks for each adsorption vessel, each adsorption vessel shall be tested individually using three separate runs set to coincide with one or more complete adsorption cycles.

The following test procedures have also been added to subsection 215.487(c): 40 CFR part 60, appendix A, method 1 or 1A for sample and velocity traverses; 40 CFR part 60, appendix A, method 2, 2A, 2C, or 2D for velocity and volumetric flow rates; 40 CFR part 60, appendix A, method 3 for gas analysis; 40 CFR part 60, appendix A, method 4 for stack gas moisture determination; and 40 CFR part 60, appendix A, methods 2, 2A, 2C, 2D, 3 and 4, as applicable at least twice during each test run.

The rule provides that no part of section 215.487 may affect the authority of the USEPA under section 114 of the Clean Air Act.

Section 215.488 (Monitors for Air Pollution Control Equipment)

Subsection 215.488(a) has been amended to require continuous monitors for outlet gas temperatures of a refrigerated condenser and for temperatures of a non-refrigerated condenser coolant supply system.

Section 215.489 (Recordkeeping)

This section replaces many of the recordkeeping requirements previously contained in subpart T. The following records are required.

The owner or operator of a pharmaceutical manufacturing plant must keep the following records:

(a) A record of all parameters listed in Section 215.488; and

(b) For sources subject to Section 215.481, the vapor pressure of the VOM being controlled for every process.

For any leak subject to section 215.485 and which can not be readily repaired within 1 hour after detection, the following records are required:

(a) Name of the leaking component;

(b) Date and time the leak was detected;

(c) Action taken to repair the leak; and

(d) Date and time the leak was repaired.

The following records shall be kept for emission sources subject to section 215.484 which contain VOL:

(a) For maintenance and inspection:

(1) The date and time each cover is opened;

(2) The length of time the cover is left open; and

(3) The reason why the cover is opened;

(b) For production and sampling, written procedures or manufacturing directions specifying the circumstances under which covers may be opened and the procedures for opening covers.

For each source with emissions claimed to be below the applicability limits of the regulations, the owner or operator of a pharmaceutical plant shall:

(a) Maintain a demonstration, including detailed engineering calculations, of the maximum daily and annual emissions for each such source showing that the emissions are below the applicability cutoffs for the current and prior year;

(b) Maintain operating records for each emission source to identify whether the cutoffs are ever exceeded; and

(c) Provide written notification to the IEPA within 30 days of determination that such an emissions source has exceeded an applicability cutoff.

Records under section 215.489 must be maintained by the owner or operator for a minimum of 2 years after the date on which they are created. Copies of the records must be made available to the IEPA upon verbal or written request.

Section 215.490 (Compliance Schedule)

For sources which commenced construction prior to the effective date of the amended rules, the owner or operator of the pharmaceutical plants must comply with the regulations by April 30, 1991. For sources which commence construction after the effective date of the amended rules, the source must be constructed so that it will operate in compliance with subpart T.

II. USEPA's Analysis of State Submittal

The rules addressed by the revisions are no longer applicable as part of a federally enforceable SIP for the Chicago ozone nonattainment area. The ozone SIP rules for the Chicago ozone nonattainment area have been replaced by regulations contained in the Federal Implementation Plan (FIP) promulgated by the United States Environmental Protection Agency (USEPA) for the Chicago area on June 29, 1990, (55 FR

26814). The regulations contained in the requested SIP revision, however, reflect those contained in the FIP for pharmaceutical manufacturing.

It should be noted that the State has submitted a new part 218 of its adopted rules to completely update the VOC (VOM) rules for the Chicago area. A similar set of rules, part 219, has been submitted to cover the Metro East St. Louis ozone nonattainment area. These rules supersede part 215 rules in the ozone nonattainment areas. These revised rules are undergoing separate review. USEPA believes that, if State rules are to replace the Chicago FIP, the rulemaking on these State rules should be accomplished in a single rulemaking rather than in a piecemeal fashion. Therefore, rulemaking on the control measures for the synthetic pharmaceutical manufacturing industry for the State's ozone nonattainment areas should be undertaken as part of the rulemaking on the complete ozone control strategy for the ozone nonattainment areas. The rulemaking proposed here, therefore, does not apply to the ozone nonattainment areas in Illinois.

III. USEPA's Rulemaking Action

USEPA approves the requested SIP revision as it applies to ozone attainment areas in the State and takes no action on the SIP revision for the ozone nonattainment areas of Chicago and Metro East St. Louis since this rule has been superseded by parts 218 and 219 of 35 IAC. Final action on the revision of the pharmaceutical manufacturing rule will be taken for the nonattainment areas when the USEPA acts on the part 218 and part 219 stationary source control strategies.

Although the CAA does not require States to adopt RACT for attainment areas, the State has authority under section 116 of the CAA to adopt regulations consistent with the purposes of the CAA. These rules provide for a reduction of the emission of VOC into the ambient air and, therefore, are consistent with the CAA.

Because USEPA considers today's action noncontroversial and routine, we are approving it today without prior proposal. The action will become effective on October 19, 1992. However, if we receive notice by September 17, 1992 that someone wishes to submit critical comments, then USEPA will publish: (1) A notice that withdraws the action, and (2) a notice that begins a new rulemaking by proposing the action and establishing a comment period.

Nothing in this action should be construed as permitting or allowing or establishing a precedent for any future request for revision to any SIP. Each request for revision to the SIP shall be considered separately in light of specific technical, economic, and environmental factors and in relation to relevant statutory and regulatory requirements.

This action has been classified as a Table Two action by the Regional Administrator under the procedures published in the **Federal Register** on January 19, 1989, (54 FR 2214–2225). On January 6, 1989, the Office of Management and Budget (OMB) waived Table Two and Table Three SIP revisions (54 FR 2222) from the requirements of section 3 of Executive Order 12291 for a period of 2 years. USEPA has submitted a request for a permanent waiver of Table Two and Table Three SIP revisions. OMB has agreed to continue the temporary waiver until such time as it rules on USEPA's request.

Under 5 U.S.C. 605(b), the Administrator certifies that SIP approvals under sections 107, 110, and 172 of the Clean Air Act will not have significant economic impact on a substantial number of small entities. SIP approvals (or redesignations) do not create any new requirements but simply approve requirements that are already State law. SIP approvals (or redesignations), therefore, do not add any additional requirements for small entities. Moreover, due to the nature of the Federal-State relationship under the Clean Air Act, preparation of a flexibility analysis for a SIP approval would constitute Federal inquiry into the economic reasonableness of the State actions. The Clean Air Act forbids the USEPA to base its actions concerning SIPs on such grounds.

Under section 307(b)(1) of the Clean Air Act, petitions for judicial review of this action must be filed in the United States Court of Appeals for the appropriate circuit by October 19, 1992. Filing a petition for reconsideration by the Administrator of this final rule does not affect the finality of this rule for the purposes of judicial review nor does it extend the time within which a petition for judicial review may be filed, and shall not postpone the effectiveness of such rule or action. This action may not be challenged later in proceedings to enforce its requirements. (See section 307(b)(2).)

List of Subjects in 40 CFR Part 52

Air pollution control, Hydrocarbons, Incorporation by reference, Ozone, Reporting and recordkeeping requirements, Volatile organic compounds.

Note: Incorporation by reference of the State Implementation Plan for the State of Illinois was approved by the Director of the Federal Register on July 1, 1992.

Dated: August 3, 1992.

Robert Springer,

Acting Regional Administrator.

40 CFR Part 52, subpart O—Illinois, is amended as follows:

PART 52—[AMENDED]

1. The authority citation for part 52 reads as follows:

Authority: 42 U.S.C. 7401–7671q.

Subpart O—Illinois

2. Section 52.720 is amended by adding paragraph (c)(90) to read as follows:

§ 52.720 Identification of plan.

* * * * *

(c) * * *

(90) On June 11, 1991, Illinois submitted regulations concerning the emission of volatile organic compounds from pharmaceutical manufacturing.

(i) Incorporation by reference.

(A) Title 35 of the Illinois Administrative Code: Environmental Protection, Subtitle B: Air Pollution, Chapter 1: Pollution Control Board, Subchapter C: Emissions Standards and Limitations for Stationary Sources, Part 215: Organic Material Emission Standards and Limitations, Subpart T: Pharmaceutical Manufacturing, Subpart A: General Provisions: Amendments to sections 215.102 and 215.105 and Creation of section 215.108. Adopted at 15 **Illinois Register** 80 18, effective May 14, 1991.

(B) Title 35 of the Illinois Administrative Code: Environmental Protection, Subtitle B: Air Pollution, Chapter 1: Pollution Control Board, Subchapter C: Emissions Standards and Limitations for Stationary Sources, Part 211: Definitions and General Provisions, Subpart B: Definitions. Adopted at 15 **Illinois Register** 79 01, effective May 14, 1991.

[FR Doc. 92–19604 Filed 8–17–92; 8:45 am]

BILLING CODE 6560-50-M

FEDERAL COMMUNICATIONS COMMISSION

47 CFR Part 22

[CC Docket No. 87-120, FCC 92-315]

Flexible Allocation of Frequencies in the Domestic Public Land Mobile Radio Service for Paging and Other Services

AGENCY: Federal Communications Commission.

ACTION: Final rule; order on reconsideration.

SUMMARY: This action partially sets aside a prior reallocation of frequencies, in the 470–512 MHz band. It was taken in response to a petition for partial reconsideration of Second Report and Order (Flexible Paging II), 4 FCC Rcd 6415 (1989), wherein the Commission reallocated all of the 470–512 MHz band that was not in current use from two-way common carrier use to common carrier control use by wide area paging systems. The intended effect of the action is to fulfill the Commission's commitment, in Flexible Paging II, not to disrupt current use of the 470–512 MHz band.

EFFECTIVE DATE: September 17, 1992.

FOR FURTHER INFORMATION CONTACT: Terrence E. Reideler, Common Carrier Bureau at (202) 632–6450.

SUPPLEMENTARY INFORMATION: This is a summary of the Commission's Order on Reconsideration of Second Report and Order, CC Docket No. 87–120, adopted July 7, 1992 and released July 20, 1992.

The full text of this decision is available for inspection and copy during normal business hours in the FCC Dockets Branch (room 230), 1919 M Street, NW., Washington, DC 20554. The complete text of the decision may also be purchased from the Commission's copy contractor, The Downtown Copy Center, 1114 21st Street, NW., Washington, DC 20036.

Summary of Order on Reconsideration

In 1980 the Commission, in response to a demonstrated need, allocated the 470–512 MHz portion of the UHF–TV spectrum for two-way common carrier use on a shared basis in each of thirteen specified metropolitan areas, including New York-Northeastern New Jersey. By 1984, however, a steady decline in the use of these frequencies had begun, principally due to the introduction of cellular service in the nation's larger Metropolitan Statistical Areas (MSAs). Because of the decreased need for the 470–512 band for two-way service, the Commission, in Flexible Paging II, reallocated some of the frequencies to common carrier control use. Interelectronics Corporation (Interelectronics), the licensee for the two-way mobile service in the New York metropolitan area, petitioned the Commission to reconsider its decision to reallocate all of the 470–512 MHz frequencies in the New York City area.

Interelectronics argued that the Commission erred in reallocating the twenty-four paired UHF frequencies assigned to the New York-Northeastern New Jersey MSA since a number of these were being utilized. Interelectronics explained that it provides two-way mobile radio telephone service in this MSA to 151 subscriber units and that it has commitments for an additional 50 units. In view of this fact, Interelectronics claimed that the Commission's stated pledge not to disrupt existing two-way use of the band was breached. Consequently, Interelectronics requested that at least five of the 24 frequency pairs be reserved for two-way use in the New York-Northeastern New Jersey MSA.

The Commission, in response to Interelectronics' arguments, noted that in Notice of Proposed Rule Making, in CC Docket 87–120, 2 FCC Rcd 2795, 52 FR 19741, May 27, 1987, it required all two-way licensees in the specified MSAs to submit traffic loading studies and to specify the number of frequency pairs that would be needed to meet existing service requirements in their respective MSAs. It also noted that Interelectronics had failed to provide this information because it did not think it necessary since it was the only licensee in its MSA that was providing two-way service. Although the Commission said that Interelectronics' excuse was unconvincing, it nevertheless reallocated five frequency pairs in the 470–512 MHz band for two-way use in the New York-Northeastern New Jersey MSA. The Commission took this action, it said, because its primary concern was for the subscribers using Interelectronics' two-way service, and because of its commitment not to disrupt existing two-way service.

Ordering Clauses

Accordingly, *it is ordered* that pursuant to the authority contained in Sec. 4(i) and 303(r) of the Communications Act of 1934, as amended, 47 U.S.C. 154(i), 303(r). Part 22 of the Commission's Rules, 47 CFR part 22 is amended as set forth below.

It is further ordered that the Petition for Partial Reconsideration filed by Interelectronics Corporation is granted to the extent discussed herein.

It is further ordered that the Petition for Partial Stay filed by Interelectronics Corporation is dismissed.

It is further ordered that the rule changes made herein will become effective September 17, 1992.

List of Subjects in 47 CFR Part 22

Communications common carrier, Radio.

Donna R. Searcy,

Secretary.

Part 22 of title 47 of the Code of Federal Regulations is amended as follows:

PART 22—PUBLIC MOBILE SERVICE

1. The authority citation for part 22 continues to read as follows:

Authority: Secs. 4, 303, 48 Stat. 1066, 1082, as amended (47 U.S.C. 154, 303), sec. 553 of the Administrative Procedure Act (5 U.S.C. 553), unless otherwise noted.

2. Section 22.501(j) is amended by adding a group entry for New York—Northeastern New Jersey after Los Angeles, Group 2 to read as follows:

§ 22.501 Frequencies.

* * * * *

(j) * * *

* * * * *

New York—Northeastern New Jersey

Group I:

473.0125	473.1125	479.0875
473.0375	479.0125	479.1125
473.0625	479.0375	
473.0875	479.0625	

* * * * *

3. Section 22.501(j)(7)(i) is amended by adding entry of New York—Northeastern New Jersey after Los Angeles, California in Table A to read as follows:

* * * * *

(j) * * *

(7) * * *

(i) * * *

* * * * *

New York—Northeastern

New Jersey ..... 40°45′06″–73°59′39″

* * * * *

4. Section 22.501(k)(4) is amended by revising the heading and the frequencies for the grouping of "Chicago, Cleveland, New York—Northeastern New Jersey" to read as follows:

* * * * *

(k) * * *

(4) * * *

* * * * *

New York—Northeastern New Jersey

Group 1:

470.0125	470.2125	476.1125
470.0375	470.2375	476.1375
470.0675	470.2625	476.1625
470.0875	470.2875	476.1875
470.1125	476.0125	476.2125
470.1375	476.0375	476.2375
470.1625	476.0675	476.2625
470.1875	476.0875	476.2875

Group 2:

473.1375	473.2625	479.2125
473.1625	473.2875	479.2375
473.1875	479.1375	479.2625
473.2125	479.1625	479.2875
473.2375	479.1875	

* * * * *

[FR Doc. 92-19363 Filed 8-17-92; 8:45 am]

BILLING CODE 6712-01-M

---

47 CFR Part 64

[CC Docket No. 90-313; FCC 92-247]

Operator Service Providers

AGENCY: Federal Communications Commission.

ACTION: Final rule; Order on reconsideration.

SUMMARY: Six petitions for reconsideration and/or clarification were filed regarding Policies and Rules Concerning Operator Service Providers, (CC Docket No. 90-313, 6 FCC Rcd 2744 (1991), 56 FR 18519 (April Report and Order)), in which the Commission adopted regulations to establish policies and standards for the provision of operator services and to implement provisions of the Telephone Operator Consumer Services Improvement Act of 1990 (47 U.S.C. 226), (TOCSIA). In response to the petitions, the Commission adopted an Order on Reconsideration (Order) in which it clarified (1) that OSPs may provide the first audible identification or "brand" before or immediately after the bong tone, and that OSPs using automated equipment that route calls to other OSPs based on the billing information provided by the consumer may brand immediately after the input of such billing information so that the consumer hears only the brand of the OSP who is actually handling the call; (2) that the OSP named in the brand must be consistent with the OSP named in the written information posted on or near the telephone by the aggregator; (3) that OSPs in equal access areas who cannot subscribe to a form of access that provides answer supervision capability are prohibited from "knowingly" billing for unanswered calls; and (4) that OSPs using automated equipment may route emergency calls to a live operator for handling.

EFFECTIVE DATE: June 18, 1992.

FOR FURTHER INFORMATION CONTACT: Sally J. Novak, Enforcement Division, Common Carrier Bureau, (202) 632-4887.

SUPPLEMENTARY INFORMATION: This is a summary of the Commission's Order on Reconsideration in CC Docket No. 90-313 (FCC 92-247), adopted June 9, 1992, and released June 18, 1992. The full text of the Order on Reconsideration is available for inspection and copying during normal business hours in the FCC Dockets Branch, room 230, 1919 M Street, NW., Washington, DC. The full text of the Order on Reconsideration may also be purchased from the Commission's duplicating contractor, Downtown Copy Center, 1114 21st Street, NW., Washington, DC 20036, (202) 452-1422.

Summary of Order on Reconsideration

I. Background

1. On June 14, 1990, the Commission adopted the initial Notice of Proposed Rule Making in CC Docket No. 90-313,[1] in which it proposed specific rules aimed at solving problems in the operator services industry that had persisted despite previous Commission action. The Commission asked interested parties to express their views on a number of related issues and proposals.[2]

2. Prior to final action by the Commission on the NPRM, Congress passed TOCSIA, which was signed into law in October 1990. The purpose of TOCSIA is "to protect consumers who make interstate operator services calls from pay telephones, hotels, and other public locations against unreasonably high rates and anticompetitive practices." [3]

3. Under TOCSIA, the Commission was required to, *inter alia*, conduct a "general" rule making proceeding beyond the scope of the initial *NPRM* and prescribe regulations to implement statutory provisions and establish certain standards and policies. On December 21, 1990, the Commission released a Further Notice of Proposed Rule Making.[4] The rules proposed in the FNPRM supplanted those proposed in the initial NPRM. On April 9, 1991, after reviewing comments filed by numerous interested parties, the Commission adopted the regulations that are the subject of the petitions for reconsideration that are addressed in this Order.

II. Discussion

A. Section 64.703 Branding

1. Timing of First Brand

4. In the April Report and Order, the Commission stated that the first brand, required by Section 64.703(a) [5] must occur prior to the bong tone and, for automated systems, prior to the validation of a billing number provided by the consumer and before the bong tone.[6]

5. Upon reconsideration, the Commission is persuaded that allowing OSPs to brand either before or immediately after the bong tone, except as indicated below, is consistent with TOCSIA. The legislative history of TOCSIA requires only that the first brand occur at the beginning of the call; it does not specify that the first brand occur prior to the bong tone.[7] The Commission's goal of ensuring that consumers can make informal choice of OSP will be furthered by allowing the first brand before or immediately after the bong tone without imposing additional costs on OSPs to retrofit their systems.

---

[1] Policies and Rules Concerning Operator Service Providers, CC Docket No. 90-313, Notice of Proposed Rule Making, 5 FCC Rcd 4630 (1990) (hereinafter "NPRM"). This action was partially in response to a petition for rule making filed by the National Association of Regulatory Utility Commissioners as well as our growing awareness that significant problems persisted in the operator services industry. *See* Petition of the National Association of Regulatory Utility Commissioners, RM-6767 (filed April 17, 1989).

[2] NPRM, 5 FCC Rcd at 4631-35, 4637-38 (these related issues included double branding, charging for unanswered or uncompleted calls, and standards for the handling of emergency calls).

[3] S. Rep. No. 439, 101st Cong., 2d Sess. 1 (1990) (Senate Report); see also H.R. Rep. No. 213, 101st Cong., 1st Sess. 2 (1989) ("The purpose of [the Act] is to protect telephone consumers against unfair prices and practices of some operator service providers (OSPs), yet allow the legitimate companies in the industry the opportunity to compete in the market.").

[4] Policies and Rules Concerning Operator Service Providers, CC Docket No. 90-313, Further Notice Of Proposed Rule Making, 6 FCC Rcd 120 (1990) (hereinafter "FNPRM").

[5] Section 64.703(a) of the Commission's rules, 47 CFR 64.703(a), provides that Each provider of operator services shall:

(1) identify itself, audibly and distinctly, to the consumer at the beginning of each telephone call and before the consumer incurs any charge for the call.

Accord 47 U.S.C. 226(b)(1)(A).

[6] April Report and Order, 6 FCC Rcd at 2757.

[7] The purpose of this provision is to ensure that consumers are informed of the identity of the carrier handling their call. * * *

By identifying itself at the beginning of the call, the carrier ensures that the consumer has the opportunity to hang up or request a transfer of the call before the call is put through and before the consumer incurs a charge for the call.

Senate Report at 12.

6. With regard to OSPs using automated equipment [8] that will under certain circumstances transfer a call to another carrier, the Commission finds that it is consistent with TOCSIA to allow that brand after the input of billing information. This approach should help minimize consumer confusion by avoiding situations where a consumer hears the brand of the OSP using automated equipment, inputs billing information, hears the brand of a second OSP that will actually be handling the call, and then hears yet a third brand by the latter OSP prior to connection of that call. The Commission notes that OSPs using automated equipment who brand after the input of billing information (and do not transfer a call as described above) and OSPs to whom a call is transferred must also provide a second brand before the call is connected and before the consumer incurs any charge for the calling compliance with § 64.703(c) of the Commission's rules.[9] The Commission cautions that any such transfers by an OSP using automated equipment must not result in call splashing [10] in violation of § 64.705(a)(3) of the Commission's rules.[11]

2. OSP Named in Brand

7. In the April Report and Order, the Commission held that to the extent that multiple parties are involved in setting rates for particular operator services, these parties may jointly decide which party will be named in the brand.[12] The Commission prohibited parties from branding in the name of another party if that party has not consented to the use of its name in the brand.[13]

8. Upon reconsideration, the Commission is not persuaded that requiring branding to be consistent with a LEC's presubscription records will further the goals of TOCSIA or the Commission of providing consumers with sufficient information to make informed choices from among competing OSPs. The Commission reiterates that parties involved in rate setting may agree on the name to be used in the brands.[14] The Commission emphasizes, however, that branding and signage must be consistent in all instances.[15] The OSP named in the brands must be the OSP identified in the signage posted by aggregators at their telephones. To require otherwise would lead to consumer confusion rather than achieve the Commission's goal of informed consumers using the OSP of their choice. The Commission will not address the issue of who should pay for a signage change, because that issue is best treated as a private matter to be worked out between the parties involved. The Commission notes that "agreggators" are responsible for placing correct signage on their telephones and joint aggregators are jointly responsible for complying with posting requirements of § 64.703(b) of the Commission's rules. Further, each OSP must ensure that each aggregator for whom such OSP is the presubscribed OSP complies with the posting requirement. See 47 CFR 64.703(e); accord 7 U.S.C. 226(b)(1)(D).

B. Section 64.705 Billing for Unanswered Calls

9. Section 64.705(a) of the Commission's rules, 47 CFR 64.705(a),[16] requires that OSPs not bill for unanswered telephone calls in areas where equal access is available and not knowingly bill for unanswered telephone calls where equal access is not available. In the April Report and Order, the Commission stated that OSPs in equal access areas are prohibited from billing for unanswered calls.[17]

10. The Commission is persuaded, upon reconsideration, that some clarification of § 64.705(a) is appropriate. A review of the legislative history of TOCSIA indicates Congress' concern that "[i]f the carrier subscribes to a form of access that does not include 'answer supervision', there is no way for the carrier to 'know' whether any of those calls are answered." [18] Indeed, while answer supervision is available in equal access end offices, the record in this proceeding does not support a finding that answer supervision is available to all OSPs in equal access areas.[19] Accordingly, OSPs in equal access areas that cannot subscribe to a form of access that provides answer supervision capability are prohibited from knowingly billing for unanswered calls under § 64.705(a)(2) of the Commission's rules.[20] The Commission cautions, however, that as answer supervision becomes available to these OSPs, such OSPs will be held to the strict standard contained in § 64.705(a)(1) of the Commission's rules.[21] Further, the Commission stresses that OSPs in equal access areas that can subscribe to a form of access that provides answer supervision capability are prohibited from billing for unanswered calls [regardless of whether they choose to subscribe to such access]. An OSP may not avoid the requirement of § 64.705(a)(1) of the Commission's rules simply by choosing not to subscribe to a form of access that includes answer supervision capability if that type of access is available.

C. Section 64.706 Immediate Routing of Emergency Calls

11. In the April Report and Order, the Commission adopted a minimum standard regarding the handling of emergency calls by OSPs. The Commission requires OSPs to connect an emergency call immediately to the emergency service provider that responds to the type of reported emergency at the site of the emergency, if known, or, if not known, to the originating location of the call.[22]

---

[8] "OSPs using automated equipment" refers to OSPs using S&F, bong-in-the box, and other automated technologies. "Store-and-forward," as well as "bong-in-the-box," devices are microprocessors located within telephones that perform automated call completion and billing services.

[9] 47 CFR 64.703(c); *accord* 47 U.S.C. 226(b)(2).

[10] "Call splashing" is the transfer of a telephone call from one provider of operator services to another such provider in such a manner that the subsequent provider is unable or unwilling to determine the location of the origination of the call and, because of such inability or unwillingness, is prevented from billing the call on the basis of such location.

47 CFR 64.708(c); *accord* 47 U.S.C. 226(a)(3).

[11] 47 CFR 64.705(a)(3); *accord* 47 U.S.C. 226(b)(1)(H). The Commission further cautions that it will be sensitive to consumer complaints regarding mis-billing or double billing of these calls.

[12] April Report and Order, 6 FCC Rcd at 2757.

[13] *Id.*

[14] Of course, nothing would preclude any entity that uses its own records to prepare signage for its telephones from requiring, through contract or some other means, that it be apprised of any changes regarding service to those telephones.

[15] The Commission notes that "XYZ Telecommunications Corporation" may brand as "XYZ" and meet our requirement for consistency between signage and branding.

[16] Accord 47 U.S.C. 226(b)(1)(F)–(G).

[17] April Report and Order, 6 FCC Rcd at 2764.

[18] Senate Report at 14.

[19] The record reflects that no LEC has challenged the assertion that answer supervision is unavailable to competitive pay telephones. The Commission notes further that some parties have taken the position that "answer supervision" contemplated by § 64.705(a) means "unbundled answer supervision." TOCSIA's legislative history, however, speaks only in terms of a "form of access that provides answer supervision," not in terms of unbundled answer supervision. See Senate Report at 14. Issues regarding the precise form or terms of answer supervision are beyond the scope of this proceeding.

[20] 47 CFR 64.705(a)(2); accord 47 U.S.C. 226(b)(1)(G).

[21] 47 CFR 64.705(a)(1); accord 47 U.S.C. 226(b)(1)(F).

[22] April Report and Order, 6 FCC Rcd at 2767.

Section 64.706 of the Commission's rules, 47 CFR 64.706, provides that upon receipt of any emergency telephone call, a provider of operator services shall immediately connect the call to the appropriate emergency service of the reported location of the emergency, if known, and, if not known, of the originating location of the call.

12. Upon reconsideration, the Commission finds that, in the case of automated systems, it is not unreasonable for the OSP to satisfy the immediate routing requirement by having the consumer follow a call sequence that allows them to speak with a live operator who will process the emergency call. The Commission notes that the emergency standard it has adopted is a minimum standard that is not intended to preempt state emergency call standards.[23] The Commission will not, at this time, prescribe a set amount of time between the dialing of any sequence to initiate an emergency call and the connection of the consumer with a live operator although the Commission expects such a transfer to be completed as quickly as possible. The Commission cautions that it will further consider the need for such action if it finds that emergency calls are being unreasonably delayed because of this arrangement. The Commission reiterates that states may adopt requirements that go beyond the minimum requirements embodied in the Commission's rule.

D. Section 64.708(b) Definition of Aggregator

13. Both TOCSIA and the Commission's rule define "aggregator" as "any person that, in the ordinary course of its operations, makes telephones available to the public or to transient users of its premises, for interstate telephone calls using a provider of operator services." [24]

14. The Commission determined that "[e]ach entity that exercises control over telephone equipment, whether through ownership of the equipment, control of access to the equipment or some other means, will be responsible as an 'aggregator' under [TOCSIA] and our rules." [25] The Commission further stated that joint aggregators are equally responsible for compliance with TOCSIA and the Commission's rules.[26]

15. In the *April Report and Order*,[27] the Commission found that the appropriate balance between the interests of the pay telephone owner and the premises owner was achieved by interpreting the definition of aggregator broadly enough to ensure compliance with the goals of ensuring the availability of consumer information and consumer choice.[28] The Commission is not persuaded on reconsideration that this approach is incorrect. The Commission noted in the April Report and Order that "in some situations" a pay telephone owner and a premises owner will have joint responsibility as aggregators because of their joint access to and control over the telephone equipment.[29] This is a determination that must be made based on the facts of each situation.[30] A blanket determination regarding who the aggregator is with regard to all pay telephones would not appear to further any Commission or TOCSIA goal. The adoption of a new rule exempting LECs from aggregator status in certain situations will likewise serve no useful purpose. Accordingly, the Commission reaffirms its determination that joint aggregators are equally responsible for compliance with and equally liable for failure to comply with the requirements of TOCSIA and our rules. The Commission points out that it will not hesitate to take appropriate action under its forfeiture authority against entities violating its rules.[31]

E. Summary

16. The rules, as clarified in this Order, will help protect consumers from unfair and deceptive practices related to their use of operator services to place interstate telephone calls and ensure that consumers have the opportunity to make informed choices in making such calls.

III. Ordering Clauses

17. Accordingly, *it is ordered*, Pursuant to sections 1, 4(i), 4(j), 201–205, 226, and 405 of the Communications Act of 1934, as amended, 47 U.S.C. 151, 154(i), 154(j), 201–205, 226, and 405, that the petitions for reconsideration, partial reconsideration and/or clarification filed by American Public Communications Council, Bell Atlantic, HF Communications Corporation, Intellicall, Inc., National Telephone Cooperative Association, and Public Telecommunications Council in this proceeding are denied, except as provided herein.

18. *It is further ordered* That the Motion for Stay Pendente Lite filed on May 24, 1991 by Intellicall, Inc., and the Petition for Partial Temporary Waiver filed on May 23, 1991, and amended on June 17, 1991, by the Ameritech Operating Companies are dismissed; and that the Motion for Leave to File Out of Time filed on August 9, 1991 by RCI Long Distance, Inc. is denied.

List of Subjects in 47 CFR Part 64

Communications common carriers, Telephone.

Federal Communications Commission.

William F. Caton,

Acting Secretary.

[FR Doc. 92–19278 Filed 8–10–92; 8:45 am]

BILLING CODE 6712-01-M

[23] See April Report and Order, 6 FCC Rcd at 2767.

[24] 47 CFR 64.708(b); accord 47 U.S.C. 226(a)(2). On February 6, 1992, the Association of College and University Telecommunications Administrators (ACUTA) along with the American Council on Education and the National Association of College and University Business Officers filed a Petition for Clarification (ACUTA Petition) regarding the status of universities as "aggregators" with respect to telephones located in dormitory rooms. This issue will not be addressed herein, but rather is being addressed separately in response to the ACUTA Petition. See Public Notice, 7 FCC Rcd 1926 (1992).

[25] April Report and Order, 6 FCC Rcd at 2751.

[26] *Id.* at 2751–2752.

[27] *Id.* at 2750–2752.

[28] *Id.* at 2751.

[29] *Id.*

[30] *Id.*

[31] See *id.* at 2762.

Proposed Rules

Federal Register
Vol. 57, No. 160
Tuesday, August 18, 1992

This section of the FEDERAL REGISTER contains notices to the public of the proposed issuance of rules and regulations. The purpose of these notices is to give interested persons an opportunity to participate in the rule making prior to the adoption of the final rules.

FEDERAL RESERVE SYSTEM

12 CFR Part 220

[Regulation T; Docket No. R-0772]

Securities Credit Transactions; Review of Regulation T, "Credit by Brokers and Dealers"

AGENCY: Board of Governors of the Federal Reserve System.

ACTION: Advance notice of proposed rulemaking and request for comment.

SUMMARY: As part of a program of continually reviewing regulations, the Board proposes to amend Regulation T to recognize the current financial environment, classify new products and transactions, and clarify the reach of existing definitions. Comment is invited on all areas of Regulation T.

Regulation T was completely rewritten in 1983 after several years of review and comments. The completely revised and simplified regulation appears in general to have met the Board's statutory obligations under the Securities Exchange Act of 1934 with a greatly reduced burden. The Board has amended Regulation T several times since 1983 to increase the types of securities that can be purchased on credit and/or used as collateral in a margin account and to allow broker-dealers to help customers exercise employee stock options. In 1990 the Board adopted a series of amendments to accommodate transactions in foreign securities. The continuing introduction of new products and types of transactions and the expansion of global markets, however, creates the need for a more broadly based review. In addition, over the past several years, Board staff has issued numerous opinions concerning the provisions of Regulation T. Some of these opinions may be codified in the regulation as a result of this review. After the review of Regulation T is completed, the Board may propose related changes to its other margin regulations, Regulations G, U, and X.

DATES: Comments should be received on or before October 16, 1992.

ADDRESSES: Comments, which should refer to Docket No. R-0772, may be mailed to Mr. William W. Wiles, Secretary, Board of Governors of the Federal Reserve System, 20th Street and Constitution Avenue, NW., Washington, DC 20551. Comments addressed to Mr. Wiles may also be delivered to the Board's mail room between 8:45 a.m. and 5:15 p.m., and to the security control room outside of those hours. Both the mail room and the security control room are accessible from the courtyard entrance on 20th Street between Constitution Avenue and C Street, NW. Comments may be inspected in room B-1122 between 9:00 a.m. and 5:00 p.m., except as provided in § 261.8 of the Board's Rules Regarding the Availability of Information, 12 CFR 261.8.

FOR FURTHER INFORMATION CONTACT: Laura Homer, Assistant Director, or Scott Holz, Senior Attorney (202/452/2781), Division of Banking Supervision and Regulation , Board of Governors of the Federal Reserve System. For the hearing impaired *only*, Telecommunications Device for the Deaf (TDD), Dorothea Thompson (202) 452-3544, Board of Governors of the Federal Reserve System, 20th and C Streets, NW., Washington, D.C.

SUPPLEMENTARY INFORMATION: Comment is invited on all areas of Regulation T. Some of the areas already identified for review are listed below in alphabetical order.

Arranging

In 1990, the Board adopted a number of amendments to Regulation T to accommodate transactions in foreign securities. The "arranging" provision found in § 220.13 was amended at that time to allow broker-dealers to arrange for a customer to obtain credit from a foreign lender on foreign securities without regard to the broker-dealer's ability to extend the credit itself. In adopting the amendment, the Board declined to add language suggested by some commenters to allow broker-dealers to arrange (1) short sales in foreign markets, and (2) loans of foreign securities. The Board indicated that these proposed enlargements would be addressed after some experience was gained with the amendments adopted at that time. The Securities Industry Association has recently raised the issue again. Comment is requested on the advisability of such amendments, subject to the considerations explained below.

The Board has long taken the position that an investor with a given amount of money should not be able to effect a greater amount of short selling than long buying. There is some concern about encouraging customers of U.S. broker-dealers to sell short in countries that do not have such a requirement. Also, some countries allow short sales to be effected without disclosure of the parties and without identifying whether the sale is short or long. Comments should, therefore, address the possible effect that allowing broker-dealers to arrange for foreign short sales could have on short sales in the United States.

In addition, comment is invited on the appropriateness of allowing broker-dealers to arrange for the borrowing and lending of foreign securities without regard to the limitations found in § 220.16 of Regulation T, the section which covers broker-dealers when they lend or borrow securities directly. As discussed immediately below, the Board is also inviting comment on that section. If that section is amended to allow broker-dealers greater freedom when borrowing and lending securities, an amendment to the arranging section may not be needed. Comments should address situations in which it is appropriate to allow broker-dealers to arrange transactions of this type which they cannot effect themselves.

Borrowing and Lending of Securities

Section 220.16 of Regulation T restricts the ability of broker-dealers to borrow and lend securities in two ways: (1) A loan of securities must be for a permitted purpose, i.e., to complete a short sale or failure to receive securities, and (2) a loan of securities must be at least 100 percent collateralized with specific types of collateral. Board staff is unaware of other valid purposes for borrowing and lending securities. If commenters believe other purposes should be permitted, they should identify appropriate situations.

Comment is invited on additional types of appropriate collateral. Originally, all loans of securities had to be collateralized by cash. Treasury securities were the first noncash instruments allowed as collateral for these loans. The Board expanded the list

of acceptable collateral in 1982 to include securities issued or guaranteed by United States agencies and certain bank letters of credit, certificates of deposit, and bankers acceptances. Since that time, Board staff has indicated it believes that marginable foreign sovereign debt securities should be allowed as collateral for loans of securities denominated in that foreign currency.

One of the reasons for restricting the ability of broker-dealers to borrow and lend securities is the possible evasion of the margin requirements by someone who obtains 100 percent credit on a security through characterization of the transaction as a stock loan. Permissible collateral for broker-dealers who borrow securities from their customers is also covered in Securities and Exchange Commission (SEC) Rule 15c3-3 (17 CFR 240.15c3-3), the SEC's customer protection rule. The Board intends to coordinate its approach in this area with that of the SEC as closely as possible, while taking into account the different reasons for the two rules.

As noted above in the section on arranging, it has been suggested that broker-dealers should be able to arrange for the borrowing and lending of foreign securities without regard to the purpose of the transaction or the collateral securing it. Interested commenters should identify those situations in which it would be appropriate to allow broker-dealers to arrange these transactions outside of the parameters of § 220.16 of Regulation T.

Section 220.16 as currently written clearly applies to exempted securities. Comment is invited on the need for continuing regulation of borrowing and lending of U.S. government securities in Regulation T. At least one primary dealer has argued that government securities dealers cannot easily document that their securities borrowing and lending is for a permitted purpose, although short sales and fails are the primary reasons for such transactions (see staff opinion in the Federal Reserve Regulatory Service at 5-615.19). In addition, the enactment of the Government Securities Act of 1986 has imposed new regulation in this market, raising the question of whether Regulation T requirements are still appropriate.

Borrowing by Creditors

Section 8(a) of the Securities Exchange Act of 1934 (15 U.S.C. 78h(a)) restricts the ability of broker-dealers to borrow using exchange-traded securities as collateral. Under this section, the only lenders to whom a broker-dealer can pledge exchange-traded securities are banks that are members of the Federal Reserve System; nonmember banks (including foreign banks with U.S. branches and agencies) that have agreed to be bound by the provisions in the Federal Reserve Act, the Banking Act of 1933, and the Securities Exchange Act of 1934 covering securities loans; and other broker-dealers as specified in Regulation T. The requirements of section 8(a) can be found in § 220.15 of Regulation T and § 221.4 of Regulation U (12 CFR 221.4). In addition, § 207.4 of Regulation G (12 CFR 207.4) mirrors the statutory limitation by prohibiting lenders who are neither banks nor broker-dealers from lending to broker-dealers on the collateral of margin stock, unless the loan is to meet emergency needs arising from exceptional circumstances.

Some broker-dealers have expressed the opinion that the statutory limitation on the types of lenders to whom they can pledge exchange-traded securities is overly restrictive and anti-competitive. The Board does not have the authority to expand the eligible types of lenders for loans that are not to meet "emergency needs." Comment is invited on whether the Board should recommend legislative changes to permit additional types of entities, such as insurance companies, to lend to broker-dealers on the collateral of exchange-traded securities.

Cash Account

Since the last revision of Regulation T in 1983, Board staff has received many inquiries concerning the ability to use a cash account for transactions not specifically authorized in § 220.8, the section governing cash accounts. Investors and some self regulatory organizations (SROs) have indicated that certain institutional customers are precluded, either under state law or corporate charter, from opening a margin account cr leaving cash and securities at a broker-dealer. These customers sometimes wish to engage in a variety of transactions, generally involving options, where their risk is limited to an amount deposited in a cash account or evidenced by an escrow receipt. Situations which Board staff could not conclude were covered by the language of § 220.8 have sometimes been referred to the SEC for a possible "no-action" position (see staff opinion in the Federal Reserve Regulatory Service at 5-666.251). Comment is invited on possible revisions to the cash account provisions to accommodate transactions in which combinations of securities limit the customer's exposure and cash or securities in the account cover that exposure.

Another area in which Board staff has received numerous inquiries about the cash account concerns transactions in exempted securities. These questions generally concern net settlement of multiple transactions or repurchase/reverse repurchase agreements.

Transactions in a cash account are settled individually to prevent "free-riding," the purchase of a security by a customer who does not have the ability to pay for it followed by the sale of the same security so that the purchase can be paid for with the proceeds of its sale. In order to reduce the number and size of large-dollar wire transfers, however, Board staff has not objected to net settlement in the cash account of transactions in exempted securities for institutional customers whose business is conducted on a delivery-versus-payment basis through a depository environment.

An SRO has noted that institutions sometimes purchase U.S. government securities in a cash account and finance their purchase through a repurchase agreement. This type of transaction appears to be more appropriate for the margin account given the current language of the cash account, but some customers may be unable to use a margin account. Comment is invited on the appropriate treatment of transactions in exempted securities in a cash account. Repurchase transactions are also discussed generally in a separate section below.

Cross-Margining

Financial futures and options on financial futures are often based on the same securities index as index options traded on a national securities exchange. Although one may be a "commodity" and the other a "security," the products are related. The concept of "cross-margining" includes the recognition that positions in financial futures can be used to hedge positions in securities index options and vice versa. While most would agree that cross-margining should be encouraged, there is a statutory limitation in this area. Section 7(c) of the Securities Exchange Act of 1934 generally prohibits broker-dealers from extending credit to purchase or carry securities unless the loan is collateralized by securities in accordance with Board rules. This statutory prohibition has prevented Board staff from opining that commodities can serve as margin for related securities positions under Regulation T. In lieu of an opinion, Board staff has indicated that it does not object to the issuance of an SEC "no-action" position permitting cross-

margining for specialists in certain circumstances. Comment is solicited on methods of accommodating cross-margining.

"Customer" Status of Certain Broker-Dealers

Broker-dealers who use another broker-dealer to clear and carry their proprietary trades are treated as customers of the clearing broker-dealer. It has been suggested that "customer" status for these broker-dealers is unnecessary as they are also subject to the SEC's net capital rule (17 CFR 240.15c3-1). However, this may present equitable problems if the SEC's net capital rule requires less capital for broker-dealers with no public customers than the amount of margin required for a non-broker-dealer with the same positions.

If broker-dealers continue to be treated as customers of their clearing broker-dealers for proprietary positions, should the provision in Regulation T covering joint and common back offices (§ 220.11(a)(2)) be amended? This provision allows broker-dealers who do not clear and carry their own transactions to avoid being treated as customers of their clearing firms if the non-clearing broker-dealer has an ownership interest in the clearing firm. When the Board adopted this provision, it declined to define an appropriate ratio between the non-clearing broker-dealer's interest in the clearing firm and the amount of transactions it needs cleared. However, several SROs have expressed concern that this section of Regulation T is being abused by non-clearing broker-dealers who make a minimal investment in a clearing firm. If this section of the regulation is being used by broker-dealers to avoid other provisions of Regulation T, comment is invited on how those sections can be amended to reduce the incentive to abuse the section on joint and common back offices.

Questions have also arisen on the treatment of foreign broker-dealers. Some parts of Regulation T apply to brokerdealers generally, such as the section on borrowing and lending securities (§ 220.16). Other parts apply only to broker-dealers registered with the SEC, such as omnibus accounts (§ 220.10). Should Regulation T take greater account of foreign broker-dealers? If so, how can the phrase "foreign broker-dealer" be defined? Also, should affiliated foreign broker-dealers be treated differently from non-affiliated foreign broker-dealers?

Derivative Securities

Margin requirements for securities positions are found in the Regulation T supplement, § 220.18. Margin depends on the type of security involved: margin equity security, margin debt security, exempted security, short options position, etc. Different margins are required for long purchases and short sales. Following the introduction of standardized, exchange-traded options in 1973, the Board amended Regulation T frequently to accommodate new options products and transactions. In 1985, the Board simplified its rules in this area by defining margin for the writing of options by reference to the maintenance rules of the exchange that trades the option. In the past few years, a variety of new products have been developed, such as index participations and capped options, that do not fit easily into one of the categories in the supplement. Board staff has tried to respond to inquiries on new products on an ad hoc basis. Comment is invited on possible generic approaches to categorizing the margin treatment of the continuing list of new products, especially those with characteristics of more than one type of security.

There appears to be an increasing number of transactions involving nonstandardized, over-the-counter options. The margin for these options is the amount required by the maintenance margin rules of the broker-dealer's SRO. Margin must be collected for nonstandardized options that are "issued, endorsed, or guaranteed" by the broker-dealer. Board staff has recently been asked about over-the-counter options that are not issued, endorsed, or guaranteed by a broker-dealer. The argument has been made that a broker-dealer who buys such an option from its customer is merely purchasing a security and no margin need be charged to the customer because the broker-dealer does not have a continuing obligation vis-a-vis the customer. One of the reasons broker-dealers traditionally endorse or guarantee OTC options is to make them transferable. Although OTC options that are not endorsed or guaranteed by a broker-dealer may not be transferable, there is nothing to stop a broker-dealer from writing a similar option to offset the option purchased from the customer. This is in many ways the equivalent of endorsing a customer option for sale to another investor. Comment is requested on the appropriate treatment of OTC options, whether or not endorsed or guaranteed by a broker-dealer.

Extensions of Time

Most customer purchases in a margin or cash account must be paid for within seven business days of trade date or the broker-dealer is required to cancel or otherwise liquidate the transaction. Under §§ 220.4(c)(3) and 220.8(d), a broker-dealer may obtain an extension of this time period from an SRO. One SRO has asked the SEC to approve a rule requiring broker-dealers to obtain extensions of time from their designated examining authority. Staff of the SEC is currently studying this issue and exploring the possibility of requiring the SRO that grants the extension to do compliance examinations. Others have suggested that broker-dealers should be able to grant extensions of time without approval from any SRO. There is some concern that this would allow broker-dealers to grant more favorable extensions to certain customers. In addition, the Board believes settlement and payment should occur as soon as possible. The Group of Thirty, a private sector group concerned with international financial issues, has recommended a world-wide standard of settlement on the third day after trade date. The Board may consider shortening the time for customer payment once the settlement period is shortened from the current five days. Comment is invited on the current need for changes to rules regarding extensions of time for customer payment.

Hedges, Offsets, and Cover in Lieu of Margin

Under § 220.18(c), the short sale of a nonexempted security requires a margin of 150 percent of the security's current market value. One hundred percent is met by the proceeds of the short sale and the customer must post an additional 50 percent margin. The additional 50 percent is not required if the account also holds securities "exchangeable or convertible within 90 calendar days without restriction other than the payment of money." Concerns have been raised about the equity of using a corporate warrant as a hedge for a short sale of the underlying stock because the warrant is not of comparable value to the underlying security. In addition, the continuing proliferation of derivative securities has led to the suggestion that like, but not identical, products should be recognized as hedges. Comment is invited on this area. Commenters who believe the relationship between like products should be recognized should describe how close a correlation between the

products should be required for the hedge to be recognized.

Specialists in options are permitted good faith credit in their specialty option and any "permitted offset positions" specified in § 220.12(b). However, permitted offsets are determined by the "underlying" security, defined in § 220.2(aa) as "the security that will be delivered upon exercise of an option." This precludes the use of permitted offsets for specialists in cash-settled index options, as no securities are delivered upon exercise. While this can be remedied by changing definitions, comment is invited generally on the area of permitted offsets.

Although margin for the writing of exchange-traded options is generally determined by reference to the rules of the exchange that trades the option, the Federal Reserve still determines what qualifies as cover and positions in lieu of margin for equity securities options. Section 220.5(c) of Regulation T recognizes lesser margin requirements for various option positions such as certain spreads and straddles. These combinations are treated as one position for Regulation T purposes. Board staff has received letters from investors who believe certain new or additional strategies should be recognized, especially multiple combinations of option positions. Comment is invited on improvements and simplifications in this area.

Repurchase and Reverse Repurchase Agreements (See Also Cash Account Above)

It is generally recognized that while repurchase (repo) and reverse repurchase agreements involve the purchase and sale of a security, the transactions can be used as a financing tool. The Board has not specified the exact treatment of these agreements for purposes of Regulation T. Because U.S. government securities are entitled to good faith loan value and are often valued at very close to 100 percent of their current market value, the repo of such a security does not present problems under Regulation T from a credit standpoint. On the other hand, the repo of a margin equity security at greater than 50 percent would be a violation of the margin regulations. Corporate debt securities fall somewhere in between U.S. government securities and corporate equities. Most corporate debt securities are entitled to good faith loan value. However, the combination of credit risk and the maintenance rules of the SROs means that such securities are not generally given as high a loan value as U.S. government securities. Comment is invited on how repurchase agreements can be defined to identify those transactions that may be effected without restriction under the margin regulations. Additional comment is sought concerning which accounts may be used to effect such transactions.

Two-Tiered Market

One of the issues often discussed in the past few years is the ability of so-called sophisticated investors to operate with lesser regulation than so-called average investors. In the margin area, the Board took note of sophisticated investors when it amended, in 1975, the general prohibition on broker-dealers arranging for credit they cannot themselves extend to allow broker-dealers to arrange for credit in private placements. The Board's rationale was that the SEC and the courts have recognized that private placements are made to limited, sophisticated group of persons who will not be lured into the transaction by the availability of credit. At the SRO level, the New York Stock Exchange has established special accounts with less regulation for large institutions. Comment is invited on the desirability of adopting less restrictive rules to apply to specified customers who are sophisticated investors. Comments must necessarily address how such customers can be identified and which restrictions can be eliminated.

When-Distributed Securities

Purchases in the cash account must generally be paid for within seven business days from trade date. A 1943 amendment to Regulation T recognized an exception for "when-distributed" securities. These securities were usually issued by public utility companies undergoing reorganizations. The amendment allows customers a maximum of seven business days from the date when the "when-distributed" security is made available, rather than seven business days from trade date.

In the 1980s, the cash account provision on "whendistributed" securities (§ 220.8(b)(1)(i)(C)) was used in connection with privatizations in the United Kingdom done on an installment basis. While publicly-traded stock is not sold on an installment basis in this country, large issues in the U.K. have used this method. Characterizing these securities as not being distributed until final payment is made therefor allowed U.S. broker-dealers to participate in the offering without being viewed as arranging for impermissible credit in a new issue. Board staff indicated that it would not object to the use of the "when-distributed" exception as an accommodation to a foreign government privatizing its state-owned companies. Questions have recently been raised about the ability of foreign private issuers to use the "when-distributed" language in Regulation T. Comment is invited on this area, including possible amendments that would recognize foreign sovereign and possibly private installment sale offerings without relying on the "when-distributed" exception.

By order of the Board of Governors of the Federal Reserve System, August 13, 1992.

William W. Wiles,

Secretary of the Board.

[FR Doc. 92-19640 Filed 8-17-92; 8:45 am]

BILLING CODE 6210-01-F

DEPARTMENT OF THE TREASURY

Office of Thrift Supervision

12 CFR Parts 552 and 563

[No. 92-137]

RIN 1550-AA47

Regulations for Federal Savings Associations; Incorporation, Organization, and Conversion of Federal Stock Associations; Combinations Involving Federal Stock Associations; Conversions to Federal Stock Associations; Regulations Applicable to All Savings Associations; Operations; Merger, Consolidation, Purchase or Sale of Assets, or Assumption of Liabilities.

AGENCY: Office of Thrift Supervision, Treasury.

ACTION: Proposed rule with request for comment.

SUMMARY: The Office of Thrift Supervision (OTS) proposes to amend its regulations governing mergers and combinations involving Federal stock savings associations to implement sections 501 and 502 of the Federal Deposit Insurance Corporation Improvement Act of 1991 (FDICIA).[1] In general, the FDICIA amendments to the insurance conversion provisions of the Federal Deposit Insurance Act (FDIA)[2] and to the Savings and Loan Holding Company Act provisions of the Home Owners' Loan Act (HOLA)[3] ease

[1] Pub. L. No. 102-242, 105 Stat. 2236, 2388.

[2] Title V. section 501 of the FDICIA, amending section 5(d)(3) of the FDIA, 12 U.S.C. 1815(d)(3).

[3] Title V. Section 501 of the FDICIA, adding subsection (t) to section 10 of the HOLA, to be codified at 12 U.S.C. 1467a(t).

previous restrictions on conversion transactions to permit all insured depository institutions to merge, assume each other's deposits, and transfer assets to each other in exchange for assuming deposit liabilities, provided the applicable Federal banking agency (AFBA) approved the transaction and the resulting institution continues to pay proportionate assessments to the Appropriate Federal deposit insurance fund. The OTS is amending its regulations to effect these changes.

This proposal would amend the OTS's current regulations governing mergers and other combinations involving Federal savings associations to allow Federal savings associations to convert directly to state and national banks, and to permit any insured depository institution that qualified for Federal Home Loan Bank membership and otherwise meets the requirements of a federal thrift charter to convert to a Federal savings association charter, as long as the transaction is approved by the AFBA of the resulting depository institution. In addition, the proposal would amend the OTS's regulations governing mergers and merger application procedures to specify the types of transactions that would require either prior notice or application to the OTS and the time frames governing review of these filings. Finally, the proposal would further clarify, streamline and consolidate OTS regulations by incorporating the OTS's merger and transfer of assets policy statement into the merger regulation.

DATES: Comments must be received on or before September 17, 1992.

ADDRESSES: Send comments to: Director, Information Services Division, Public Affairs, Office of Thrift Supervision, 1700 G Street, NW., Washington, DC 20552, Attention Docket No. [92-137]. These submissions may be hand delivered to 1700 G Street, NW. from 9 a.m. to 5 p.m. on business days; they may be sent via facsimile transmission to FAX Number (202) 906-7753 or (202) 906-7755. Submissions must be received by 4 p.m. on the day they are due in order to be considered by the OTS. Late-filed, misaddressed or misidentified submissions will not be considered in this rulemaking. Comments will be available for public inspection at 1776 G Street, NW., street level.

FOR FURTHER INFORMATION CONTACT: Michael P. Vallely, Senior Attorney, Corporate and Securities Division, (202) 906-6241; Therese L. Monahan, Project Manager, Supervisory Programs, (202) 906-5740; or Gary Masters, Financial Analyst, Corporate Activities Division, (202) 906-6729; Office of Thrift Supervision, 1700 G Street, NW., Washington, DC. 20552.

SUPPLEMENTARY INFORMATION:

I. Background

A. Financial Institutions Reform, Recovery, and Enforcement Act of 1989

Section 5(d) of the FDIA, in effect since the enactment of the Financial institutions Reform, Recovery, and Enforcement Act of 1989 (FIRREA),[4] contains a series of provisions that restrict so-called "conversion transactions" whereby an insured depository institution switches insurance funs or combines with or transfers deposits to a depository institution insured by a different fund.[5] This provision generally prohibits any SAIF-insured savings association from engaging in any conversion transaction until August 8, 1994.[6]

Until enactment of the FDICIA, exceptions to the five-year moratorium were available in four situations only: (1) Transfers of deposits between institutions that involved an amount defined to be an insubstantial portion of the total deposits of each participating depository institution; (2) certain conversion transactions involving the acquisition of a SAIF or BIF member in default or in danger of default; (3) combinations of SAIF-insured savings associations and BIF-insured bank subsidiaries of holding companies under the so-called "Oakar amendment" to the FDIA;[7] and (4) conversions by a SAIF-insured savings association to a bank charter, provided the resulting bank remains a SAIF member, under the so-called "Sasser amendment" to the FDIA.[8]

B. The FDICIA Amendments to the FDIA and the HOLA

New section 5(d)(3) of the FDIA eases the general conversion prohibition to permit mergers, consolidations and transfer of asset and assumption of liability transactions between SAIF and BIF insured institutions, provided that certain conditions are met and that proportionate insurance premiums are paid to both the SAIF and the BIF funds after the transaction.[9]

Specifically, the FDICIA expands the FIRREA's "Oakar" exception to eliminate the requirement that the combining bank and thrift be under the common control of a bank holding company, and to eliminate relative asset size requirements for the institutions involved. The FDICIA requires prior OTS approval of combinations between savings associations and other types of insured depository institutions where the acquiring, assuming, or resulting institution is a savings association. The OTS is required to review such transactions under the standards of section 18(c) of the FDIA (the Bank Merger Act (BMA)) [10] and must determine that the resulting savings association and any holding company thereof meet applicable capital requirements upon consummation.[11] The savings association resulting from the transaction must continue to pay proportionate assessments to the BIF and SAIF insurance funds based on the deposits of the acquiring institutions and the acquired deposits.[12]

In conjunction with this expansion of the "Oakar" provision, the FDICIA also gives Federally-chartered savings associations specific authority to undertake mergers, consolidations and transfer of asset and assumption of liability transactions with banks and other insured depository institutions, consistent with new section 5(d)(3) of the FDIA. Specifically, new section 10(t) of the HOLA provides that, subject to certain laws, any Federal savings association may acquire or be acquired by any insured depository institution.[13] The term "acquire" is defined to mean to acquire, directly or indirectly, ownership or control through a merger or consolidation or an acquisition of assets or assumption of liabilities, provided that following such merger, consolidation, or acquisition, an acquiring insured depository institution may not own the shares of the acquired insured depository institution.[14]

---

[4] Pub. L. 101-73, 103 Stat. 183 (1989).

[5] A conversion transaction" is broadly defined to include (1) a change in status from a Savings Association Insurance Fund ("SAIF") member to a Bank Insurance Fund ("BIF") member; (2) the merger or consolidation of a SAIF member with a BIF member; (3) the assumption of any liability by a BIF member to pay any deposits of a SAIF member; and (4) the transfer of assets by a SAIF member to a BIF member in consideration of the BIF member's assumption of any portion of the SAIF member's deposit liabilities. Conversion transactions are also defined to include BIF-to-SAIF insurance conversions and deposit transfers. See 12 U.S.C. 1815(d)(2)(B).

[6] 12 U.S.C. 1815(d)(2)(A)(ii).

[7] 12 U.S.C. 1815(d)93) (1989 & Supp. 1991).

[8] 12 U.S.C. 1815(d)(2)(G).

[9] See sections 5(d)(3)(B), (C), (D), (E) and (F) of the FDIA, to be codified at 12 U.S.C. 1815(d)93)(B), (C), (D), (E) and (F).

[10] 12 U.S.C. 1828(c)(2).

[11] Section 5(d)(3)(E)(iv) of the FDIA, to be codified at 12 U.S.C. 1815(d)(3)(E)(iv).

[12] Sections 5(d)(3)(B), (C) and (D) of the FDIA, to be codified at 12 U.S.C. 1815(d)(3)(B), (C) and (D).

[13] Section 10(t)(1) of the HOLA, to be codified at 12 U.S.C. 1467a(t)(1).

[14] Section 10(t)(3) of the HOLA, to be codified at 12 U.S.C. 1467a(t)(3).

New section 10(t) of the HOLA mandates that any application by a savings association to acquire or be acquired by another insured depository institution shall be approved or disapproved in writing by the Director before the end of the 60-day period beginning on the date such application is filed with the agency.[15] This period can be extended for an additional 30-day period if the Director determines that an applicant has not furnished all the necessary information or the information furnished is substantially inaccurate or incomplete.[16]

II. Proposed Amendments

A. Expansion of Permissible Combinations for Federal Associations

The proposed regulation would revise § 552.13(c) [17] to permit Federal stock savings associations to "acquire" or "be acquired by" any insured depository institution, upon compliance with appropriate application or notice requirements, described in Section 11.C. below. In addition, the proposed regulation would add definitions for the terms "acquire" and "insured depository institution" to implement the new provisions of the HOLA and the FDIA.[18]

B. Charter Conversions by and to Federal Associations

The proposal adds a new § 552.2–7 to the Federal stock association regulations that specifically permits Federal stock savings associations to convert to state or national banks. Applications under new § 552.2–7 would be subject to the requirements of the OT's merger and transfer of assets regulation at § 563.22,[19] and would be processed in accordance with the expedited process established by new paragraph (h)(1) of that regulation. Applications would be in the form of a notice described in Section II.C. below.

In addition, the proposal amends § 552.2–6 of the regulations [20] to permit any stock-form insured depository institutions that is, or is eligible to become, a member of a Federal Home Loan Bank and other requirements of a Federal savings association charter, to convert to a Federal stock charter, provided such conversion was permissible under Federal or state law governing conversion by the institution. This change would provide financial institutions with a reciprocal chartering option, thereby further enhancing the ability of a bank or thrift to operate pursuant to whatever charter it chooses. Applications filed under revised § 552.2–6 would need to comply with § 552.2–1 and other sections in part 552 regarding establishment of a Federal thrift charter.

C. Application Processing

As noted, the FDICIA requires prior OTS approval of combinations between savings associations and other types of insured depository institutions where the acquiring, assuming, or resulting institution is a savings association. In such transactions, the OTS will require an application under the merger regulations.[21] The OTS will continue to process and review such applications under the current procedures and review standards for transactions requiring OTS approval under the BMA.

Under current regulations, any savings association that proposes to transfer deposit liabilities to a bank in an Oakar transaction, or convert to a bank in a Sasser conversion, is required to file a transfer of assets application with the OTS.[22] The OTS continues to believe that an application process requiring prior written approval is necessary in certain situations, discussed below. However, with respect to Sasser transactions, and Oakar transactions in which no savings association survives, the OTS's experience has indicated that a notice requirement would be sufficient. In such transactions, the OTS believes an application is unnecessary because the Federal banking regulator of the surviving institution will perform a detailed review under applicable laws and regulations. A notice to the OTS will enable the agency, among other things, to identify any pending or potential supervisory concerns or enforcement actions involving the savings associations that are parties to the transaction, and advise the future bank regulatory agency regarding these concerns.

The OTS believes that a notice procedure also would be appropriate for transactions in which less than all or substantially all of a savings association's deposit liabilities are transferred to a bank, and for purchases of assets by a savings association or sales of less than all or substantially all of the assets of an association (*i.e.*, "bulk sales and transfers not in the ordinary course of business"),[23] that are not subject to OTS approval under the BMA, provided that the association is well capitalized and otherwise qualifies for "expedited treatment" under the OTS's Applications Restructuring regulation at part 516.[24] Accordingly, the OTS proposes to establish notice and application procedures, as set forth below.

1. New Filing Requirements and Processing Time Frames

Under the proposal, a new paragraph (h) has been added to the merger regulations at § 563.22 setting forth special procedures applicable to: (1) Charter conversions under new § 522.2–7 of the regulations; (2) Oakar transactions under section 5(d)(3) of the FDIA; and (3) purchases of assets by a savings association that do not require OTS approval under the BMA, or bulk sales of less than all or substantially all of the assets of an association.

a. Transactions with no surviving savings association. Section 563.22(h)(1) of the proposal requires a notice to be submitted to the OTS for thrift-to-bank charter conversions and Oakar transactions where no savings association will survive consummation of the transaction. The notice would be in the form of either a letter describing material information regarding the transaction or a copy of a filing made with the regulatory agency of the resulting institution that must approve the transaction. These notices must be filed at the same time the application is filed with the regulatory agency of the resulting agency to give the OTS the opportunity to identify any pending or potential supervisory concerns or enforcement actions involving the savings associations that are parties to the transaction and alert the regulatory authority of the resulting institution regarding any supervisory concerns over the disappearing savings association or associations.

b. Transactions where a savings association survives. Section 563.22(h)(2) of the proposal establishes an "expedited notice" or "standard application" requirement, depending on the health of the savings associations involved, for three categories of transactions in which one or more savings associations would survive the transaction: (1) Purchases of assets by a savings association that do not require

[15] Section 10(t)(2)(A) of the HOLA, to be codified at 12 U.S.C. 1467a(t)(2)(A). This provision applies to any application required to be filed with the OTS under section 5(d)(3) of the FDIA.

[16] Section 10(t)(2)(B) of the HOLA, to be codified at 12 U.S.C. 1467a(t)(2)(B).

[17] 12 CFR 552.13(c).

[18] Section 10(t)(3) of the HOLA, to be codified at 12 U.S.C. 1467a(t)(3); section 3(c)(2) of the FDIA, 12 U.S.C. 1813(c)(2).

[19] 12 CFR 563.22.

[20] 12 CFR 552.2–6.

[21] 12 CFR 563.22(a), (c), (d), (e) and 571.5.

[22] 12 CFR 563.22(b).

[23] 12 CFR 571.5(a). Applications to engage in these transfer transactions are currently required under 12 CFR 563.22(b).

[24] *See* 57 FR 14329 (April 20, 1992).

OTS approval under the BMA; (2) bulk sales of less than all or substantially all of the assets of an association; and (3) Oakar transactions under section 5(d)(3) of the FDIA in which a savings association transfers less than all or substantially all of its deposit liabilities to a bank, a so-called "Oakar branch sale."

Under proposed § 563.22(h)(2)(i), an expedited notice procedure is available for all three categories of transactions where all constituent savings associations meet the conditions for "expedited treatment" under § 516.3(a).[25] Notices under this provision of the proposal would be deemed approved automatically 30 days after receipt, unless the OTS determines that an application is required.

Under proposed § 563.22(h)(2)(ii) and 563.22(h)(2)(iii), a standard application procedure must be followed where any constituent savings association does not meet the criteria for "expedited treatment" under § 516.3(a), or where a notice filed under § 563.22(h)(2)(i) is incomplete or otherwise does not satisfy the notice requirements. These applications will be subject to the review periods set forth in part 516, with certain exceptions. As with other applications, the OTS is required to notify an applicant under proposed § 563.22(h)(2)(iii) within 30 calendar days after proper submission of an application whether it is "sufficient" or "complete," and what additional information is required, if any, in order to render the submission sufficient, or that the submission is materially deficient and will not be processed.[26] In addition, the 60-day period for review for an application under this provision of the proposal commences on the date the OTS determines the application to be sufficient.[27]

Under part 516, the OTS may extend the application review period for an additional 30-day period upon notice to the applicant,[28] and also permits the OTS to extend the review period in cases involving a significant issue of law or policy [29] or where a protest has been filed under the Community Reinvestment Act ("CRA").[30] However, § 563.22(h)(2)(iii) of this proposal specifically provides that the 60-day review period for an application may be extended only if the OTS determines that the applicant has failed to furnish information requested by the OTS, or if the information furnished is substantially inaccurate.

The OTS solicits comment on the proposed processing procedures and time frames, including whether applications under proposed § 563.22(h)(2)(iii) should be deemed "filed" for purposes of the new section 10(t)(2) of the HOLA when deemed complete under § 516.2. In addition, comments are requested on whether the OTS should suspend the proposed processing time frames for applications challenged on CRA grounds.

2. Review Standards

The OTS policy statement on mergers and transfers of assets currently set forth, among other things, the review standards for mergers and combinations among savings associations and between savings associations and banks under the Oakar and Sasser provisions of the FDIA.[31] The OTS intends to continue to apply the standards currently set forth in §§ 571.5(b) through (j) of the merger policy statement to transactions requiring OTS approval under the BMA and to Oakar transactions where a savings association survives. To streamline applicable regulations, the OTS proposes to amend § 563.22 to incorporate these standards, and to eliminate § 571.5.

The OTS requests comments on the standards that should be used to review these transactions. More specifically, comments are requested on whether any of the standards in current section § 571.5 should be streamlined, clarified or otherwise modified or deleted in connection with their incorporation into § 563.22.

D. Mandatory Federal Home Loan Bank Membership for Converting Savings Associations

Federal Home Loan Bank (FHLBank) membership is statutorily required of Federal savings associations [32] and has been required of state-chartered associations as a condition of deposit insurance.[33] In addition, since enactment of the FIRREA, the OTS has required resulting institutions in thrift-to-bank charter conversions and Oakar transactions to continue participation in the FHLBank system in accordance with the requirements of the Federal Housing Finance Board.

On March 12, 1992, the OTS proposed amending its regulations regarding operations of all savings associations to add a provision requiring all savings associations to obtain and maintain FHLBank membership.[34] In proposing the mandatory FHLBank membership rule, the OTS emphasized that membership in the FHLBank system contributes to the safety and soundness of both the thrift industry as a whole and individual savings associations.[35] Among other benefits of FHLBank membership noted by the OTS, the FHLBank system provides savings associations with a potential source of borrowings to use as a tool to manage their interest rate risk effectively and to meet their liquidity requirements.[36]

The OTS solicits comment on whether the OTS should continue to require FHLBank membership of resulting institutions in the context of thrift-to-bank mergers and charter conversions not resulting in one or more savings associations, and if such converting thrifts are not required to remain FHLBank members, the manner in which they should contribute to Resolution Funding Corporation interest financing. In addition, comment is solicited on the manner in which any such requirement would be imposed in connection with the notice requirement of proposed § 563.22(h)(1).

E. Issues Regarding Mutual Savings Associations

The current regulations generally provide that merger transactions involving Federal mutual savings associations must result in a mutual form of association, unless the mutual institution converts to a stock association as part of the transaction.[37] The proposal would not amend these regulations. Accordingly, a mutual savings association would still not be permitted to merge with a stock thrift or bank except in conjunction with a mutual-to-stock conversion process. The OTS solicits comment as to whether the mutual savings associations should be

[25] To be codified at 12 CFR 516.3(a).

[26] To be codified at 12 CFR 516.2(c).

[27] To be codified at 12 CFR 516.2(d).

[28] To be codified at 12 CFR 516.2(e).

[29] To be codified at 12 CFR 516.2(f).

[30] To be codified at 12 CFR 516.2(c)(6). Under this provision, the automatic approval time frames in part 516 may be temporarily suspended in the case of an application protested on CRA grounds until a record sufficient to support a determination on the protest is developed.

[31] See 12 CFR 563.22(c)(1), cross-referencing the OTS' policy statement on mergers and transfers of assets, 12 CFR 571.5.

[32] See section 5(f) of the HOLA. 12 U.S.C. 1464(f).

[33] FHLBank membership was required by order of the Federal Home Loan Bank Board ("Bank Board") as a condition of insurance of accounts, pursuant to the Bank Board's general authority to ensure the safe and sound operation and regulation of savings associations. The Director of the OTS has been conferred the same authority under the HOLA. See 12 U.S.C. 1462a and 1463.

[34] 57 FR 8732 (March 12, 1992).

[35] 57 FR at 8733.

[36] *Id.*

[37] 12 CFR 552.13(c)(1).

permitted to merge with banks or other institutions otherwise than in conjunction with a mutual-to-stock conversion, and if permitted what safeguards should be established with respect to these transactions.[38]

F. Technical Amendments

Sections 552.13(b)(1) through 552.13(b)(11) have been renumbered §§ 552.13(b)(1) through 552.13(b)(13) to accommodate the addition of new definitions for "acquire" and "insured depository institution," in proper alphabetical order. In addition, the definition of "merger" at renumbered § 552.13(b)(9), and "resulting association" at renumbered § 552.13(b)(11), have been amended to substitute "depository institution" for "association," in order to the broaden the definitions' application to transactions permitted under new § 552.13(c).

Under the proposal, paragraph (d) of § 552.13 and paragraphs (b) and (e) of § 563.22 regarding application requirements and approval standards for mergers and other combinations have been amended to cross-reference the requirements and procedures set forth in proposed paragraph (h) of § 563.22. In addition, paragraph (a) of § 563.22 regarding applications under the Bank Merger Act has been amended to clarify that paragraph (a)(1) is applicable only in situations in which the acquiring or resulting institution is a savings association.

G. Regulatory Streamlining

To streamline and consolidate the regulations governing combinations of savings associations, the OTS proposes to incorporate the provisions of the policy statement on mergers and transfers of assets into the regulation that implements the BMA and requires prior approval of transfer transactions. As previously noted, the OTS is also proposing to incorporate the approval standards, definitional provisions and other provisions of the merger policy statement into § 563.22. Although the OTS is proposing this revision to its regulations, the proposed regulatory text set forth below does not incorporate this aspect of the proposal. Commenters should refer to § 571.5 for the text of the provisions proposed to be incorporated into revised § 563.22.

[38] For example, if mutual thrifts were permitted to merge with banks or other institutions without first converting to stock form, should such transactions be treated as a liquidation of the mutual institution with the attendant protections accorded to account holders? See 12 CFR 563b.3(f).

Solicitation of Comments

The OTS requests public comment on all aspects of the proposals set forth herein. To facilitate processing of comments, the OTS requests that any comments clearly reference the Resolution Number of this proposal. The OTS has determined that a thirty (30)-day public comment period is appropriate because prompt action is mandated by the FDICIA and is in the public interest.

Regulatory Flexibility Act

Pursuant to section 605(b) of the Regulatory Flexibility Act, it is certified that this proposal, if promulgated, will not have a significant economic impact on a substantial number of small entities. Accordingly, an initial Regulatory Flexibility Analysis is not required.

Executive Order 12291

The OTS has determined that this proposed regulation does not constitute a "major rule" for purposes of Executive Order 12291. Therefore, preparation of a preliminary Regulatory Impact Analysis is not required.

List of Subjects

12 CFR Part 552

Reporting and recordkeeping requirements, Savings associations, Securities.

12 CFR Part 563

Accounting, Advertising, Crime, Currency, Flood insurance, Investments, Reporting and recordkeeping requirements, Savings associations, Securities, Surety bonds.

Accordingly, the Director of the OTS hereby proposes to amend parts 552 and 563, chapter V, title 12, Code of Federal Regulations, as set forth below:

SUBCHAPTER C—REGULATIONS FOR FEDERAL SAVINGS ASSOCIATIONS

PART 552—INCORPORATION, ORGANIZATION, AND CONVERSION OF FEDERAL STOCK ASSOCIATIONS

1. The authority citation for part 552 continues to read as follows:

Authority: Sec 2, 48 Stat. 128, as amended (12 U.S.C. 1462); sec. 3, as added by sec. 301, 103 Stat. 278 (12 U.S.C. 1462a); sec. 4, as added by sec. 301, 103 Stat. 280 (12 U.S.C. 1463); sec. 5, 48 Stat. 132, as amended (12 U.S.C. 1464); sec. 10, as added by sec. 301, 103 Stat. 318 (12 U.S.C. 1467a).

2. Section 552.2–6 is revised to read as follows:

§ 552.2–6 Conversion from stock insured depository institution to Federal stock association.

With the approval of the Office, any stock depository institution, the deposits of which are insured by the Federal Deposit Insurance Corporation and which is, or is eligible to become, a member of a Federal Home Loan Bank and otherwise qualifies for a federal savings association charter, may convert into a Federal stock association.

3. Section 552 is amended by adding a new § 552.2–7 to read as follows:

§ 552.2–7 Conversion to National banking association or State bank.

A Federal stock savings association may convert to a National banking association or a State bank after giving notice to the Office in accordance with § 563.22(h) of subchapter D of this chapter.

4. Section 552.13 is amended by revising paragraphs (b) through (d) to read as follows:

§ 552.13 Combinations involving Federal stock associations.

* * * * *

(b) *Definitions.* The following definitions apply to §§ 552.13 and 552.14 of this part:

(1) *Acquire.* For purposes of paragraph (c)(4) of this section, "acquire" means to acquire, directly or indirectly, ownership or control through a merger or consolidation or acquisition of assets or assumption of liabilities, provided that following such merger, consolidation, or acquisition, an acquiring insured depository institution may not own the shares of the acquired insured depository institution.

(2) *Association.* "Association" has the same meaning as the term "savings association," as defined in § 561.43 of subchapter D of this chapter.

(3) *Bulk purchase of assets.* A transfer of all or substantially all the assets and may include the assumption of all or substantially all the liabilities of an association or a depository institution to or from a Federal stock association.

(4) *Consolidation.* Fusion of two or more associations into a newly-created association having the combined powers and rights of all its constituents.

(5) *Constituent association.* Resulting or disappearing association.

(6) *Depository institution.* Any commercial bank (including a private bank), a savings bank, a trust company, a savings and loan association, a building and loan association, a homestead association, a cooperative bank, an industrial bank or a credit union, chartered in the United States

and having its principal office located in the United States.

(7) *Disappearing association.* An association whose corporate existence does not continue after a merger or consolidation effected under this section.

(8) *Insured depository institution.* Any depository institution the deposits of which are insured by the Federal Deposit Insurance Corporation.

(9) *Merger.* Uniting two or more depository institutions by the transfer of all property rights and franchises to the resulting depository institution, which retains its corporate identity.

(10) *Mutal association.* Any association organized in a form not requiring non-withdrawable stock under Federal or State law.

(11) *Resulting institution.* Any depository institution whose corporate existence continues after a merger, or the depository institution resulting from a consolidation of two or more depository institutions.

(12) *State.* Includes the District of Columbia, Commonwealth of Puerto Rico, and States, territories, and possessions of the United States.

(13) *Stock association.* Any association organized in a form requiring non-withdrawable stock.

(c) *Forms of combination.* (1) A Federal stock association may require or be acquired by any insured depository institution, provided that:

(i) The acquisition is in compliance with, and receives all applicable approvals required under, sections 5(d)(3) and 18(c) of the Federal Deposit Insurance Act;

(ii) If any constituent savings association is a mutual association, the resulting institution shall be mutually held, unless:

(A) The transaction involves a supervisory merger;

(B) The transaction is approved under part 563b of subchapter D of this chapter; or

(C) The transaction involves an interim stock Federal savings association or an interim stock State association.

(2) A Federal stock association may make bulk purchases of assets and/or assumptions of deposit liabilities, provided that:

(i) The resulting association meets the requirements for Federal Home Loan Bank membership and insurance of accounts;

(ii) The resulting association conforms with the time prescribed by the Director, or his delegate, to the requirements of section 5(c) of the Home Owners' Loan Act; and

(iii) The selling or transferring institution is not a mutual association, except in the context of a mutual holding company reorganization under section 10(o) of the Home Owners' Loan Act.

(d) *Office approval.* Prior written approval of the Office is required for every combination, except as provided in § 563.22(h) of subchapter D of this chapter. In determining whether to confer to such approval, the Office shall apply the criteria set out in § 563.22 of subchapter D of this chapter and shall impose any conditions it deems necessary or appropriate to ensure compliance with those criteria and the requirements of this chapter. Prior written approval of the Federal Deposit Insurance Corporation is required for every combination involving both a Federal association insured by the Federal Deposit Insurance Corporation and an association not insured by such corporation.

* * * * *

SUBCHAPTER D—REGULATIONS APPLICABLE TO ALL SAVINGS ASSOCIATIONS

PART 563—OPERATIONS

5. The authority citation for part 563 continues to read as follows:

Authority: Sec. 2, 48 Stat. 128, as amended (12 U.S.C. 1462); sec. 3, as added by sec. 301, 103 Stat. 278 (12 U.S.C. 1462a); sec. 4, as added by sec. 301, 103 Stat. 280 (12 U.S.C. 1463); sec. 5, 48 Stat. 132, as amended (12 U.S.C. 1464); sec. 10, as added by sec. 301, 103 Stat. 318 (12 U.S.C. 1467a); sec. 11, as added by sec. 301, 103 Stat. 342 (12 U.S.C. 1468); sec. 18, 64 Stat. 891, as amended by sec. 321, 103 Stat. 267 (12 U.S.C. 1828); sec. 1204, 101 Stat. 662 (12 U.S.C. 3806); sec. 202, 87 Stat. 982, as amended (42 U.S.C. 4106).

6. Section 563.22 is amended by revising paragraphs (a) and (b), by revising the introductory text of paragraph (e)(1), and by adding a new paragraph (h) to read as follows:

§ 563.22 Merger, consolidation, purchase or sale of assets, or assumption of liabilities.

(a) No savings association may, without application to and approval by the Office:

(1) Merge or consolidate with any insured depository institution, if the acquiring or resulting institution is to be a savings association; or

(2) Directly or indirectly acquire the assets of, or assume liability to pay any deposit made in, any insured depository institution.

(b) No savings association may convert to a national or state bank, merge or consolidate with another insured depository institution where the savings association is not the resulting institution, or make any other transfer, as defined in § 571.5 of this subchapter (excluding transfers subject to paragraph (a) of this section), without application to and approval by the Office, except as provided in paragraph (h) of this section.

* * * * *

(e) *Automatic approvals by the Office.* (1) Applications filed pursuant to paragraphs (a) and (b) of this section, not involving a transaction subject to paragraph (h) of this section, shall be deemed to be approved automatically by the Office 30 calendar days after the Office sends written notice to the applicant that the application is complete, unless:

* * * * *

(h) *Special requirements and procedures for certain transactions*—(1) *Transactions with no surviving savings association.* A notice must be submitted to the Office for any transaction under paragraph (b) of this section or § 552.2–7 of subchapter C of this chapter in which no savings association survives the transaction. Notices must be submitted at the same time the application is filed with the regulatory agency of the resulting institution, and may be in the form of either a letter describing the material features of the transaction or a copy of a filing made with another Federal or state regulatory agency seeking approval from that agency for the transaction under the Bank Merger Act or other applicable statute.

(2) *Transactions in which one or more savings associations survive*—(i) *Expedited treatment.* A notice in conformity with § 516.3(a)(2) of subchapter A of this chapter may be submitted to the Office for any transaction under paragraph (b) of this section in which one or more savings associations survive, provided all constituent savings associations meet the conditions for expedited treatment under § 516.3(a) of subchapter A of this chapter. Notices submitted under this paragraph shall be deemed approved automatically by the Office 30 calendar days after receipt, unless the Office advises the applicant in writing prior to the expiration of such period that the proposed transaction may not be consummated without the Office's approval of an application under paragraph (h)(2)(ii) or (2)(iii) of this section.

(ii) *Standard treatment.* An application in conformity with § 516.3(b)(2) of subchapter A of this chapter and paragraph (c)(2) of this section must be submitted to and

approved by the Office for any transaction under paragraph (b) of this section in which one or more savings associations survive, where any constituent savings association does not meet the conditions for expedited treatment under § 516.3(a) of subchapter A of this chapter, except as provided in paragraph (h)(2)(iii) of this section. Applications under this paragraph shall be processed in accordance with the time frames set forth in § 516.2 of subchapter A of this chapter.

(iii) *Standard treatment for transactions under section 5(d)(3) of the Federal Deposit Insurance Act.* An application in conformity with § 516.3(b)(2) of subchapter A of this chapter must be submitted to and approved by the Office for any transaction under section 5(d)(3) of the Federal Deposit Insurance Act. (12 U.S.C. 1815(d)(3)) and paragraph (b) of his section in which one or more savings associations survive, where any constituent savings association does not meet the conditions for expedited treatment under § 516.3(a) of subchapter A of this chapter. However, the period for review may be extended only if the Office determines that the applicant has failed to furnish all requested information or that the information submitted is substantially inaccurate.

Dated: March 27, 1992.

By the Office of Thrift Supervision.

Jonathan L. Fiechter,

Deputy Director for Washington, Operations.

[FR Doc. 92-19366 Filed 8-17-92; 8:45 am]

BILLING CODE 6720-01-M

DEPARTMENT OF TRANSPORTATION

Federal Aviation Administration

14 CFR Part 39

[Docket No. 92-CE-37-AD]

Airworthiness Directives; Piper Aircraft Corporation PA-32R Series Airplanes

AGENCY: Federal Aviation Administration, DOT.

ACTION: Notice of proposed rulemaking (NPRM).

SUMMARY: This document proposes to adopt a new airworthiness directive (AD) that would be applicable to certain Piper Aircraft Corporation (Piper) PA-32R series airplanes. The proposed action would require inspection, possible repair, and modification of the airframe and engine mount supporting structure. The Federal Aviation Administration (FAA) has received several reports of cracks developing in the engine mount cluster welds near the upper nose gear drag brace bushings on the affected airplanes. The actions specified by the proposed AD are intended to prevent separation of the engine from the airplane because of a cracked engine mount structure.

DATES: Comments must be received on or before November 6, 1992.

ADDRESSES: Submit comments in triplicate to the FAA, Central Region, Office of the Assistant Chief Counsel, Attention: Rules Docket No. 92-CE-37-AD, room 1558, 601 E. 12th Street, Kansas City, Missouri 64106. Comments may be inspected at this location between 8 a.m. and 4 p.m., Monday through Friday, holidays excepted.

Service information that is applicable to this AD may be obtained from the Piper Aircraft Corporation, Customer Services, 2926 Piper Drive, Vero Beach, Florida 32960. This information also may be examined at the Rules Docket at the address above.

FOR FURTHER INFORMATION CONTACT: Mr. Charles Perry, Aerospace Engineer, FAA, Atlanta Aircraft Certification Office, 1669 Phoenix Parkway, suite 210C, Atlanta, Georgia 30349; Telephone (404) 991-2910; Facsimile (404) 991-3606.

SUPPLEMENTARY INFORMATION:

Comments Invited

Interested persons are invited to participate in the making of the proposed rule by submitting such written data, views, or arguments as they may desire. Communications should identify the Rules Docket number and be submitted in triplicate to the address specified above. All communications received on or before the closing date for comments, specified above, will be considered before taking action on the proposed rule. The proposals contained in this notice may be changed in light of the comments received.

Comments are specifically invited on the overall regulatory, economic, environmental, and energy aspects of the proposed rule. All comments submitted will be available, both before and after the closing date for comments, in the Rules Docket for examination by interested persons. A report that summarizes each FAA-public contact concerned with the substance of this proposal will be filed in the Rules Docket.

Commenters wishing the FAA to acknowledge receipt of their comments submitted in response to this notice must submit a self-addressed, stamped postcard on which the following statement is made: "Comments to Docket No. 92-CE-37-AD." The postcard will be date stamped and returned to the commenter.

Availability of NPRMs

Any person may obtain a copy of this NPRM by submitting a request to the FAA, Central Region, Office of the Assistant Chief Counsel, Attention: Rules Docket No. 92-CE-37-AD, room 1558, 601 E. 12th Street, Kansas City, Missouri 64106.

Discussion

The FAA has received several reports of cracks developing in the engine mount cluster welds near the upper nose gear drag brace bushings on certain Piper PA-32R series airplanes. Further investigation reveals that some of the referenced in-service airplanes may have been assembled with an improperly secured nose gear actuator attachment bracket. If not detected and corrected, cracking of the engine mount structure could result in separation of the engine from the airplane.

Piper has issued Service Bulletin (SB) No. 955, dated March 3, 1992, which specifies procedures for (1) inspecting the engine mount for cracks and repairing any cracks; and (2) inspecting and reinforcing the nose gear actuator attachment bracket. This service bulletin also references instructions contained in Engine Mount Drag Link Installation Kit, Piper Part No. 766-252 (for turbocharged models); and Engine Mount Drag Link Installation Kit, Piper Part No. 766-253 (for normally aspirated models).

After examining the circumstances and reviewing all available information related to the incidents described above including the referenced service information, the FAA has determined that AD action should be taken to prevent separation of the engine from the airplane because of a cracked engine mount structure.

Since the condition described is likely to exist or develop in other Piper PA-32R series airplanes of the same type design, the proposed AD would require (1) an inspection of the engine mount structure for cracks, and repair of any cracked structure; (2) modification of the airframe structure to strengthen the landing gear and engine mount attach areas; and (3) an inspection and possible reinforcement of the nose gear actuator attachment bracket. The proposed actions would be accomplished in accordance with Piper SB No. 955, dated March 3, 1992, and the instructions to the referenced installation kits.

The FAA estimates that 1,968 normally aspirated airplanes and 803 turbocharged airplanes in the U.S. registry would be affected by the proposed AD, that it would take approximately 15 workhours per normally aspirated airplane and 30 workhours per turbocharged airplane to accomplish the proposed action, and that the average labor rate is approximately $55 an hour. Parts cost approximately $295 per normally aspirated airplane and $330 per turbocharged airplane. Based on these figures, the total cost impact of the proposed AD on U.S. operators is estimated to be $3,794,100 ($2,204,160 for normally aspirated airplanes plus $1,589,940 for turbocharged airplanes).

The regulations proposed herein would not have substantial direct effects on the States, on the relationship between the national government and the States, or on the distribution of power and responsibilities among the various levels of government. Therefore, in accordance with Executive Order 12612, it is determined that this proposal would not have sufficient federalism implications to warrant the preparation of a Federalism Assessment.

For the reasons discussed above, I certify that this action (1) is not a "major rule" under Executive Order 12291; (2) is not a "significant rule" under DOT Regulatory Policies and Procedures (44 FR 11034, February 26, 1979); and (3) if promulgated, will not have a significant economic impact, positive or negative, on a substantial number of small entities under the criteria of the Regulatory Flexibility Act. A copy of the draft regulatory evaluation prepared for this action has been placed in the Rules Docket. A copy of it may be obtained by contacting the Rules Docket at the location provided under the caption **"ADDRESSES"**.

List of Subjects in 14 CFR Part 39

Air transportation, Aircraft, Aviation safety, Safety.

The Proposed Amendment

Accordingly, pursuant to the authority delegated to me by the Administrator, the Federal Aviation Administration proposes to amend 14 CFR part 39 of the Federal Aviation Regulations as follows:

PART 39—AIRWORTHINESS DIRECTIVES

1. The authority citation for part 39 continues to read as follows:

Authority: 49 U.S.C. App. 1354(a), 1421 and 1423; 49 U.S.C. 106(g); and 14 CFR 11.89.

§ 39.13 [Amended]

2. Section 39.13 is amended by adding the following new AD:

Piper Aircraft Corporation Docket No. 92–CE–37–AD.

Applicability: The following model and serial number airplanes, certificated in any category:

Model	Serial Nos.
PA-32R-300	32R-7680001 through 32R-7880068.
PA-32RT-300	32R-7885001 through 32R-7985105.
PA-32RT-300T	32R-7887001 through 32R-7987126.
PA-32R-301	32R-8013001 through 32R-8613005 and 3213001 through 3213037.
PA-32R-301T	32R-8029001 through 32R-8629006 and 3229001 through 3229003.

Compliance: Required within the next 100 hours time-in-service (TIS) after the effective date of this AD, unless already accomplished.

Note 1: The compliance times referenced in this AD take precedence over those cited in the referenced service information.

To prevent separation of the engine from the airplane because of a cracked engine mount structure, accomplish the following:

(a) Inspect the engine mount as specified in and in accordance with the INSTRUCTIONS: PART I section of Piper Service Bulletin (SB) No. 955, dated March 3, 1992. Prior to further flight, repair any cracks in accordance with Piper SB No. 955.

(b) Modify the airframe structure and strengthen the landing gear and engine mount attach areas in accordance with the instructions contained in either Engine Mount Drag Link Installation Kit, Piper Part No. 766–252 (for turbocharged models); or Engine Mount Drag Link Installation Kit, Piper Part No. 766–253 (for normally aspirated models). These kits are referenced in Piper SB No. 955, dated March 3, 1992.

(c) Inspect the nose gear actuator attachment bracket for correct rivet dimensions in accordance with the INSTRUCTIONS: PART III section of Piper SB No. 955, dated March 3, 1992. If any rivets are found that are not of the dimensions referenced in Piper SB No. 955, prior to further flight, reinforce the nose gear actuator attachment bracket in accordance with the referenced service information.

(d) If the parts that are required to accomplish the modification specified in paragraph (b) of this AD have been ordered, but are not available from the manufacturer, reinspect the engine mount as required by paragraph (a) of this AD at intervals not to exceed 100 hours TIS until parts become available.

e) Special flight permits may be issued in accordance with FAR 21.197 and 21.199 to operate the airplane to a location where the requirements of this AD can be accomplished.

(f) An alternative method of compliance or adjustment of the compliance time that provides an equivalent level of safety may be approved by the Manager, Atlanta Aircraft Certification Office, 1669 Phoenix Parkway, Suite 210C, Atlanta, Georgia 30349. The request shall be forwarded through an appropriate FAA Maintenance Inspector, who may add comments and then send it to the Manager, Atlanta Aircraft Certification Office.

Note 2: Information concerning the existence of approved alternative methods of compliance with this AD, if any, may be obtained from the Atlanta Aircraft Certification Office.

(g) All persons affected by this directive may obtain copies of the document referred to herein upon request to the Piper Aircraft Corporation, 2926 Piper Drive, Vero Beach, Florida 32960; or may examine this document at the FAA, Central Region, Office of the Assistant Chief Counsel, room 1558, 601 E. 12th Street, Kansas City, Missouri 64106.

Issued in Kansas City, Missouri, on August 12, 1992.

Dwight A. Young,

Acting Manager, Small Airplane Directorate, Aircraft Certification Service.

[FR Doc. 92–19592 Filed 8–17–92; 8:45 am]

BILLING CODE 4910–13–M

DEPARTMENT OF HOUSING AND URBAN DEVELOPMENT

Office of the Assistant Secretary for Housing-Federal Housing Commissioner

24 CFR Parts 207, 213, 220, 221, 231, 232, 234, 242, and 244

[Docket No. R–92–1534; FR–2892–P–01]

RIN 2502–AF14

Expansion of Operating Loss Loan Program

AGENCY: Office of the Assistant Secretary for Housing-Federal Housing Commissioner, HUD.

ACTION: Proposed rule.

SUMMARY: This rule proposes to implement section 427 of the Housing and Community Development Act of 1987. That section expands the coverage of insured operating loss loans in connection with HUD insured multifamily projects to include operating losses (and certain mortgagor cash contributions) for any consecutive 24-month period within the first 10 years after the date of completion of the project. Before the enactment of section 427, operating loss loans were limited to losses incurred during the first 24 months of operation of the project.

DATES: Comment Due Date: October 19, 1992.

ADDRESSES: Interested persons are invited to submit comments regarding this rule to the Rules Docket Clerk, Office of General Counsel, room 10276, Department of Housing and Urban Development, 451 Seventh Street, SW., Washington, DC 20410. Communications should refer to the above docket number and title. A copy of each communication submitted will be available for public inspection and copying between 7:30 a.m. and 5:30 p.m. weekdays at the above address.

FOR FURTHER INFORMATION CONTACT: Linda D. Cheatham, Acting Director, Office of Insured Multifamily Housing Development, room 6134, Department of Housing and Urban Development, 451 Seventh Street, SW., Washington, DC 20410, telephone (202) 708-3000. A telecommunications device for deaf persons (TDD) is available at (202) 708-4594. (These are not toll-free telephone numbers.)

SUPPLEMENTARY INFORMATION: Section 427 of the Housing and Community Development Act of 1987 (Pub.L. 100-242, approved February 5, 1988) extensively amends subsection 223(d) of the National Housing Act. As amended, subsection 223(d) is described below:

(d)(1) Notwithstanding any other provision of this Act, the Secretary is authorized to insure loans made to cover the operating losses of certain projects that have existing project mortgages insured by the Secretary. Insurance under this subsection shall be in the Secretary's discretion and upon such terms and conditions as the Secretary may prescribe, and shall be provided in accordance with the provisions of this subsection. For purposes of this subsection, the term "operating loss" means the amount by which the sum of the taxes, interest on the mortgage debt, mortgage insurance premiums, hazard insurance premiums, and the expense of maintenance and operation of the project covered by the mortgage, exceeds the income of the project.

(2) To be eligible for insurance pursuant to this paragraph—

(A) The existing project mortgage (i) shall have been insured by the Secretary at any time before or after the date of enactment of the Housing and Community Development Act of 1987; and (ii) shall cover any property, other than a property upon which there is located a 1- to 4-family dwelling;

(B) The operating loss shall have occurred during the first 24 months after the date of completion of the project, as determined by the Secretary; and

(C) The loan shall be in an amount not exceeding the operating loss.

(3) To be eligible for insurance pursuant to this paragraph—

(A) The existing project mortgage (i) shall have been insured by the Secretary at any time before or after the date of enactment of the Housing and Community Development Act of 1987; (ii) shall cover any property, other than a property upon which there is located a 1-to 4-family dwelling; and (iii) shall not cover a subsidized project, as defined by the Secretary;

(B) The loan shall be in an amount not exceeding 80 percent of the unreimbursed cash contributions made on or after March 18, 1987, by the project owner for the use of the project, during any period of consecutive months (not exceeding 24 months) in the first 10 years after the date of completion of the project, as determined by the Secretary, except that in no event may the amount of the loan exceed the operating loss during such period;

(C) The loan shall be made within 10 years after the end of the period of consecutive months referred to in the preceding subparagraph; and

(D) The project shall meet all applicable underwriting and other requirements of the Secretary at the time the loan is to be made.

(4) Any loan insured pursuant to this subsection shall (A) bear interest at such rate as may be agreed upon by the mortgagor and mortgagee; (B) be secured in such manner as the Secretary shall require; (C) be limited to a term not exceeding the unexpired term of the original mortgage; and (D) be insured under the same section as the original mortgage. The Secretary may provide insurance pursuant to paragraph (2) or (3), or pursuant to both such paragraphs, in connection with an existing project mortgage, except that the Secretary may not provide insurance pursuant to both such paragraphs in connection with the same period of months referred to in paragraphs (2)(B) and (3)(B). The Secretary is authorized to collect a premium charge for insurance of loans pursuant to this section in an amount computed at the same premium rate as is applicable to the original mortgage. This premium shall be payable in cash or in debentures of the insurance fund under which the loan is insured at par plus accrued interest. In the event of a failure of the borrower to make any payment due under such loan or under the original mortgage, both the loan and original mortgage shall be considered in default, and if such default continues for a period of thirty days, the lender shall be entitled to insurance benefits computed in the same manner for the original mortgage, except that in determining the interest rate under section 224 for the debentures representing the portion of the claim applicable to the loan, the date of the commitment to insure the loan shall be taken into consideration rather than the commitment or insurance date for the original mortgage.

(5) A loan involving a project covered by a mortgage insured under section 213 that is the obligation of the Cooperative Management Housing Insurance Fund shall be the obligation of such fund, and loans involving projects covered by the mortgage insured under section 236 or under any section of this title pursuant to subsection (e) of this section shall be the obligation of the Special Risk Insurance Fund.

The major change from previous law effected by the 1987 Act was the inclusion of the above-quoted subsection (d)(3) authorizing an operating loan program for unsubsidized projects which (1) does not limit coverage to losses in the first 24 months of operation and (2) can be in an amount "not exceeding 80 percent of the unreimbursed cash contributions made on or after March 18, 1987, by the project owner for the use of the project".

It should be noted that, under these new statutory provisions, the amount of any loan may not exceed the "operating loss" for the period of 24 or fewer months covered by the loan. The "operating loss" is defined in section 223(d)(1) of the statute. Only expenditures made to cover such operating losses will be eligible for treatment as an "unreimbursed cash contribution" under the proposed rule.

This rule proposes to implement the above quoted subsection 223(d)(3) of the National Housing Act. It should be noted the rule provides that, where the FHA Commissioner has already insured a loan under the pre-1987 law covering the first two years of losses, only one additional loan can be insured under new, post-1987 authority. In no event, may more than two operating loss loans be insured by the Commissioner for any particular project.

Procedural Matters

This rule does not constitute a "major rule" as that term is defined in section 1(d) of Executive Order 12291 on Federal Regulations issued by the President on February 17, 1981. An analysis of the rule indicates that it does not (1) have an annual effect on the economy of $100 million or more; (2) cause a major increase in costs or prices for consumers, individual industries, Federal, State, or local government agencies, or geographic regions; or (3) have a significant adverse effect on

competition, employment, investment, productivity, innovation, or on the ability of United States-based enterprises to compete with foreign-based enterprises in domestic or export markets.

A Finding of No Significant Impact with a respect to the environment has been made in accordance with HUD regulations in 24 CFR part 50, which implement section 102(2) of the National Environmental Policy Act of 1969. The Finding of No Significant Impact is available for public inspection between 7:30 a.m. and 5:30 p.m. weekdays in the Office of the Rules Docket Clerk at the above address.

In accordance with 5 U.S.C. 605(b) (the Regulatory Flexibility Act), the undersigned hereby certifies that this rule does not have a significant economic impact on a substantial number of small entities. The rule would expand the availability of operating loss loans for FHA multifamily mortgagors. This limited category of small entities would be provided additional assistance in their efforts to maintain and operate successful multifamily projects.

This rule was listed as item H-35-90 (Sequence No. 1146) in the Department's Semiannual Agenda of Regulations published on April 27, 1992 (57 FR 16804, 16824) pursuant to Executive Order 12291 and the Regulatory Flexibility Act.

Executive Order 12606, The Family

The General Counsel, as the Designated Official under Executive Order 12606, The Family, has determined that this rule does not have potential for significant impact on family formation, maintenance, and general well-being, and, thus, is not subject to review under the Order. By providing additional assistance to FHA mortgagors for the successful maintenance and operation of their multifamily projects the rule should prove beneficial to families who rent units in these projects.

Executive Order 12612, Federalism

The General Counsel, as the Designated Official under section 6(a) of Executive Order 12612, Federalism, has determined that the policies contained in this rule will not have Federalism implications and, thus, are not subject to review under the Order. The rule does not change in any way existing relationships between HUD, the States and local governments.

The Catalog of Federal Domestic Assistance program number is 14.167.

List of Subjects

24 CFR Part 207

Manufactured homes, Mortgage insurance, Reporting and recordkeeping requirements, Solar energy.

24 CFR Part 213

Cooperatives, Mortgage insurance, Reporting and recordkeeping requirements.

24 CFR Part 220

Home improvement, Loan programs—housing and community development, Mortgage insurance, Reporting and recordkeeping requirements, Urban renewal.

24 CFR Part 221

Low and moderate income housing, Mortgage insurance, Reporting and recordkeeping requirements.

24 CFR Part 231

Low and moderate income housing, Mortgage insurance, Reporting and recordkeeping requirements.

24 CFR Part 232

Fire prevention, Health facilities, Loan programs—health, Loan programs—housing and community development, Mortgage insurance, Nursing homes, Reporting and recordkeeping requirements.

24 CFR Part 234

Condominiums, Mortgage insurance, Reporting and recordkeeping requirements.

24 CFR Part 242

Hospitals, Mortgage insurance, Reporting and recordkeeping requirements.

24 CFR Part 244

Health facilities, Mortgage insurance, Reporting and recordkeeping requirements.

Accordingly, 24 CFR parts 207, 213, 220, 221, 231, 232, 234, 242 and 244 are amended to read as follows:

PART 207—MULTIFAMILY HOUSING MORTGAGE INSURANCE

1. The authority citation for 24 CFR part 207 would continue to read as follows:

Authority: 12 U.S.C. 1701z-11(e), 1713, and 1715b; 42 U.S.C. 3535(d).

2. Section 207.4 would be amended by revising paragraph (f)(3) and by adding a new paragraph (g), to read as follows:

§ 207.4 Maximum mortgage amounts.

* * * * *

(f) * * *

(3) *Maximum interest rate.* The loan may bear interest at a rate agreed upon by the mortgagor and mortgagee. Interest shall be payable in monthly installments on the principal then outstanding.

* * * * *

(g) In addition to the insurance of loans to cover two-year operating losses under paragraph (f) of this section, the Commissioner may also insure any operating loss loan that meets the following conditions:

(1) The existing project mortgage:

(i) Shall have been insured by the Commissioner at any time before or after the date of enactment of the Housing and Community Development Act of 1987;

(ii) shall cover any property, other than a property upon which there is located a 1- to 4-family dwelling; and

((iii) shall not cover a subsidized project. For purposes of this paragraph (g)(1)(iii), subsidized projects are:

(A) Projects insured under section 236.

(B) Projects insured under the section 221(d)(3) Below Market Interest Rate (BMIR) program.

(C) Insured projects with Rent Supplement contracts.

(D) Insured projects with Rental Assistance Payments (RAP).

(E) Insured projects with project-based Section 8 assistance (e.g., new/sub rehab, mod rehab, project-based certificates, LMSA, Property Disposition).

(D) Insured projects with Rental Assistance Payments (RAP).

(E) Insured projects with project-based certificates, LMSA, Property Disposition).

(2) The principal amount for the loan shall not exceed the lesser of the following:

(i) 80 percent of the unreimbursed cash contributions made on or after March 18, 1987, by the project owner for the use of the project, to cover operating losses, as defined in paragraph (f)(1) of this section, incurred during any period of consecutive months (not exceeding 24 months) in the first 10 years after the date of completion of the project, as determined by the Commissioner, or

(ii) An amount which, when added to the outstanding indebtedness relating to the property, does not exceed the maximum amount insurable under section 207 of the Act.

(3) The loan shall be made within 10 years after the end of the period of consecutive months referred to in paragraph (g)(2) of this section.

(4) Project shall meet all applicable underwriting and other requirements of

the Commissioner at the time the loan is to be made.

(5) Any loan insured under this paragraph (g) shall:

(i) Bear interest at a rate agreed upon by the mortgagor and mortgagee;

(ii) Be secured in such manner as the Commissioner shall require;

(iii) Be limited to a term not exceeding the unexpired term of the original mortgage; and

(iv) Be insured under the same part of this chapter as the original mortgage.

(6) The Commissioner may provide insurance under § 207.4(f) or under this paragraph (g), or under both paragraphs (f) and (g) of this section, in connection with an existing project mortgage, except that the Commissioner may not provide insurance under both of these paragraphs in connection with the same period of months referred to in paragraph (g)(2) of this section.

(7) Where the Commissioner has already provided insurance under § 207.4(f), no more than one additional loan may be insured under this paragraph (g). Where no previous insurance has been provided under § 207.4(f), a maximum of two loans may be insured under this paragraph (g).

PART 213—COOPERATIVE HOUSING MORTGAGE INSURANCE

3. The authority citation for 24 CFR part 213 would continue to read as follows:

Authority: 12 U.S.C. 1715b, 1715e; 42 U.S.C. 3535(d).

4. Section 213.7 would be amended by revising paragraph (k)(3) and by adding a new paragraph (n), to read as follows:

§ 213.7 Maximum insurable amounts.

* * * * *

(k) * * *

(3) *Maximum interest rate.* The loan may bear interest at such rate as may be agreed upon by the mortgagor and mortgagee. Interest shall be payable in monthly installments on the principal then outstanding.

* * * * *

(n) In addition to the insurance of loans to cover two-year operating losses under paragraph (k) of this section, the Commissioner may also insure any operating loss loan that meets the following conditions:

(1) The existing project mortgage:

(i) shall have been insured by the Commissioner at any time before or after the date of enactment of the Housing and Community Development Act of 1987;

(ii) shall cover any property, other than a property upon which there is located a 1- to 4-family dwelling; and

(iii) shall not cover a subsidized project. For purposes of this paragraph (n)(1)(iii), subsidized projects are:

(A) Projects insured under section 236.

(B) Projects insured under the section 221(d)(3) Below Market Interest Rate (BMIR) program.

(C) Insured projects with Rent Supplement contracts.

(D) Insured projects with Rental Assistance Payments (RAP).

(E) Insured projects with project-based Section 8 assistance (e.g., new/sub rehab, mod rehab, project-based certificates, LMSA, Property Disposition).

(2) The principal amount of the loan shall not exceed the lesser of:

(i) 80 percent of the unreimbursed cash contributions made on or after March 18, 1987, by the project owner for the use of the project, to cover operating losses as defined in paragraph (k) of this section, incurred during any period of consecutive months (not exceeding 24 months) in the first 10 years after the date of completion of the project, as determined by the Commissioner, or

(ii) an amount which, when added to the existing indebtedness relating to the property, does not exceed the amount insurable under section 213 of the Act.

(3) The loan shall be made within 10 years after the end of the period of consecutive months referred to in paragraph (n)(2) of this section.

(4) The project shall meet all applicable underwriting and other requirements of the Commissioner at the time the loan is to be made.

(5) Any loan insured under this paragraph (n) shall (i) bear interest at a rate agreed upon by the mortgagor and mortgagee; (ii) be secured in such manner as the Commissioner shall require; (iii) be limited to a term not exceeding the unexpired term of the original mortgage; and (iv) be insured under the same part of this chapter as the original mortgage.

(6) The Commissioner may provide insurance in accordance with § 213.7(k) or under this paragraph (n), or under both paragraphs (k) and (n) of this section, in connection with an existing project mortgage, except that the Commissioner may not provide insurance under both of these paragraphs in connection with the same period of months referred to in paragraph (n)(2) of this section.

(7) Where the Commissioner has already provided insurance under § 213.7(k), no more than one additional loan may be insured under this paragraph (n). Where no previous insurance has been provided under § 213.7(k), a maximum of two loans may be insured under this paragraph (n).

PART 220—MORTGAGE INSURANCE AND INSURED IMPROVEMENT LOANS FOR URBAN RENEWAL AND CONCENTRATED DEVELOPMENTS AREAS

5. The authority citation for 24 CFR part 220 would continue to read as follows:

Authority: 12 U.S.C. 1713, 1715b, 1715k; 42 U.S.C. 3535(d).

6. Section 220.507 would be amended by adding a new paragraph (f) to read as follows:

§ 220.507 Maximum mortgage amounts.

* * * * *

(f) In addition to the insurance of loans to cover two-year operating losses under paragraph (e) of this section, the Commissioner may also insure any operating loss loan that meets the following conditions:

(1) The existing project mortgage:

(i) Shall have been insured by the Commissioner at any time before or after the date of enactment of the Housing and Community Development Act of 1987;

(ii) shall cover any property, other than a property upon which there is located a 1- to 4-family dwelling; and

(iii) shall not cover a subsidized project. For purposes of this paragraph (f)(1)(iii), subsidized projects are:

(A) Projects insured under section 236.

(B) Projects insured under the section 221(d)(3) Below Market Interest Rate (BMIR) program.

(C) Insured projects with Rent Supplement contracts.

(D) Insured projects with Rental Assistance Payments (RAP).

(E) Insured projects with project-based section 8 assistance (e.g., new/sub rehab, mod rehab, project-based certificates, LMSA, Property Disposition).

(2) The principal amount of the loan shall not exceed

(i) 80 percent of the unreimbursed cash contributions made on or after March 18, 1987, by the project owner for the use of the project, to cover operating losses as defined in paragraph (e) of this section incurred during any period of consecutive months (not exceeding 24 months) in the first 10 years after the date of completion of the project, as determined by the Commissioner, or

(ii) An amount which, when added to the outstanding indebtedness relating to the property, does not exceed the maximum amount insurable under section 220 of the Act.

(3) The loan shall be made within 10 years after the end of the period of

consecutive months referred to in paragraph (f)(2) of this section.

(4) The project shall meet all applicable underwriting and other requirements of the Commissioner at the time the loan is to be made.

(5) Any loan insured under this paragraph (f) shall

(i) Bear interest at a rate agreed upon by the mortgagor and mortgagee;

(ii) Be secured in such manner as the Commissioner shall require;

(iii) Be limited to a term not exceeding the unexpired term of the original mortgage; and

(iv) Be insured under the same part of this chapter as the original mortgage.

(6) The Commissioner may provide insurance in accordance with § 220.507(e) or under this paragraph (f), or under both paragraphs (e) and (f), in connection with an existing project mortgage, except that the Commissioner may not provide insurance under both of these paragraphs in connection with the same period of months referred to in paragraph (f)(2) of this section.

(7) Where the Commissioner has already provided insurance under § 220.507(e), no more than one additional loan may be insured under this paragraph (f). Where no previous insurance has been provided under § 220.507(e), a maximum of two loans may be insured under this paragraph (f).

PART 221—LOW COST AND MODERATE INCOME MORTGAGE INSURANCE

7. The authority citation for 24 CFR part 221 would be revised to read as follows:

Authority: 12 U.S.C. 1707(a), 1715b, and 1715*l*; 42 U.S.C. 3535(d).

8. Section 221.514 would be amended by revising paragraph (e)(3) and by adding a new paragraph (f), to read as follows:

§ 221.514 Maximum mortgage amounts.

* * * * *

(e) * * *

(3) *Maximum interest rate.* The loan may bear interest at a rate agreed upon by the mortgagor and mortgagee. Interest shall be payable in monthly installments on the principal then outstanding.

* * * * *

(f) In addition to the insurance of loans to cover two-year operating losses under paragraph (e) of this section, the Commissioner may also insure any operating loss loan that meets the following conditions:

(1) The existing project mortgage:

(i) Shall have been insured by the Commissioner at any time before or after the date of enactment of the Housing and Community Development Act of 1987;

(ii) shall cover any property, other than a property upon which there is located a 1- to 4-family dwelling; and

(iii) shall not cover a subsidized project. For purposes of this paragraph (f)(1)(iii), subsidized projects are:

(A) Projects insured under section 236.

(B) Projects insured under the section 221(d)(3) Below Market Interest Rate (BMIR) program.

(C) Insured projects with Rent Supplement contracts.

(D) Insured projects with Rental Assistance Payments (RAP).

(E) Insured projects with project-based Section 8 assistance (e.g., new/sub rehab, mod rehab, project-based certificates, LMSA, Property Disposition).

(2) The principal amount of the loan shall not exceed 80:

(i) 80 percent of the unreimbursed cash contributions made on or after March 18, 1987, by the project owner for the use of the project, to cover operating losses as defined in paragraph (e) of this section, incurred during any period of consecutive months (not exceeding 24 months) in the first 10 years after the date of completion of the project, as determined by the Commissioner, or

(ii) An amount which, when added to the outstanding indebtedness relating to the property, does not exceed the maximum amount insurable under section 221 of the Act.

(3) The loan shall be made within 10 years after the end of the period of consecutive months referred to in paragraph (f)(2) of this section.

(4) The project shall meet all applicable underwriting and other requirements of the Commissioner at the time the loan is to be made.

(5) Any loan insured under this paragraph (f) shall

(i) Bear interest at a rate agreed upon by the mortgagor and mortgagee;

(ii) Be secured in such manner as the Commissioner shall require;

(iii) Be limited to a term not exceeding the unexpired term of the original mortgage; and

(iv) Be insured under the same part of this chapter as the original mortgage.

(6) The Commissioner may provide insurance in accordance with § 221.514(e) or under this paragraph (f), or under both paragraphs (e) and (f) of this section, in connection with an existing project mortgage, except that the Commissioner may not provide insurance under both of these paragraphs in connection with the same period of months referred to in paragraph (f)(2) of this section.

(7) Where the Commissioner has already provided insurance under § 221.514(e), no more than one additional loan may be insured under this paragraph (f). Where no previous insurance has been provided under § 221.514(e), a maximum of two loans may be insured under this paragraph (f).

PART 231—HOUSING MORTGAGE INSURANCE FOR THE ELDERLY

9. The authority citation for 24 CFR part 231 would continue to read as follows:

Authority: 12 U.S.C. 1715b, 1715v; 42 U.S.C. 3535(d).

10. Section 231.7 would be revised to read as follows:

§ 231.7 Loans to cover operating loss.

(a) *Loans to cover operating loss during first two years.* (1) When the Commissioner determines that an operating loss has occurred during the first two years following completion of the project, the Commissioner may, in his or her discretion, accept for insurance under this part, a loan to cover the loss. For the purposes of this section, an operating loss shall occur when the Commissioner determines that the total of the taxes, interest on the mortgage debt, mortgage insurance premiums, hazard insurance premiums, and the expenses of maintenance and operation of the project (excluding depreciation) exceeds the project income.

(2) The loan shall be secured by an instrument in a form approved by the Commissioner for use in the jurisdiction in which the project is located.

(3) The loan may bear interest at a rate agreed upon by the mortgagee and the mortgagor. Interest shall be payable in monthly installments on the principal then outstanding.

(4) The loan shall be limited to a term not exceeding the unexpired term of the original mortgage.

(b) *Other operating loss loans.* In addition to the insurance of loans to cover two-year operating losses under paragraph (a) of this section, the Commissioner may also insure any operating loss loan that meets the following conditions:

(1) The existing project mortgage:

(i) Shall have been insured by the Commissioner at any time before or after the date of enactment of the Housing and Community Development Act of 1987;

(ii) Shall cover any property, other than a property upon which there is located a 1- to 4-family dwelling; and

(iii) Shall not cover a subsidized project. For purposes of this paragraph (b)(1)(iii), subsidized projects are:

(A) Projects insured under section 236.

(B) Projects insured under the section 221(d)(3) Below Market Interest Rate (BMIR) program.

(C) Insured projects with Rent Supplement contracts.

(D) Insured projects with Rental Assistance Payments (RAP).

(E) Insured projects with project-based Section 8 assistance (e.g., new/sub rehab, mod rehab, project-based certificates, LMSA, Property Disposition).

(2) The principal amount of the loan shall not exceed;

(i) 80 percent of the unreimbursed cash contributions made on or after March 18, 1987, by the project owner for the use of the project, to cover operating losses (as defined in paragraph (a) of this section, incurred during any period of consecutive months (not exceeding 24 months) in the first 10 years after the date of completion of the project, as determined by the Commissioner, or

(ii) An amount which, when added to the outstanding indebtedness relating to the property, does not exceed the maximum amount insurable under section 213 of the Act.

(3) The loan shall be made within 10 years after the end of the period of consecutive months referred to in paragraph (b)(2) of this section.

(4) The project shall meet all applicable underwriting and other requirements of the Commissioner at the time the loan is to be made.

(5) Any loan insured under this paragraph (b) shall:

(i) Bear interest at a rate agreed upon by the mortgagor and mortgagee;

(ii) Be secured in such manner as the Commissioner shall require;

(iii) Be limited to a term not exceeding the unexpired term of the original mortgage; and

(iv) be insured under the same part of this chapter as the original mortgage.

(6) The Commissioner may provide insurance in accordance with § 231.7(a) or under this paragraph (b), or under both paragraphs (a) and (b) of this section, in connection with an existing project mortgage, except that the Commissioner may not provide insurance under both of these paragraphs in connection with the same period of months referred to in paragraph (b)(2) of this section.

(7) Where the Commissioner has already provided insurance under § 231.7(a), no more than one additional loan may be insured under this paragraph (b). Where no previous insurance has been provided under § 231.7(a), a maximum of two loans may be insured under this paragraph (b).

PART 232—MORTGAGE INSURANCE FOR NURSING HOMES, INTERMEDIATE CARE FACILITIES, AND BOARD AND CARE HOMES

11. The authority citation for 24 CFR part 232 would continue to read as follows:

Authority: 12 U.S.C. 1715b, 1715w, and 1715z(9); 42 U.S.C. 3535(d).

12. Section 232.31a would be revised to read as follows:

§ 232.31a Loans to cover operating loss.

(a) *Loans to cover operating loss during first two years.* (1) When the Commissioner determines that an operating loss has occurred during the first two years following completion of the project, the Commissioner may, in his or her discretion, accept for insurance under this part, a loan to cover the loss. For the purposes of this section, an operating loss shall occur when the Commissioner determines that the total of the taxes, interest on the mortgage debt, mortgage insurance premiums, hazard insurance premiums, and the expenses of maintenance and operation of the project (excluding depreciation) exceeds the project income.

(2) The loan shall be secured by an instrument in a form approved by the Commissioner for use in the jurisdiction in which the project is located.

(3) The loan may bear interest at such rate agreed upon by the mortgagee and the mortgagor. Interest shall be payable in monthly installments on the principal then outstanding.

(4) The loan shall be limited to a term not exceeding the unexpired term of the original mortgage.

(b) *Other operating loss loans.* In addition to the insurance of loans to cover two-year operating losses under paragraph (a) of this section, the Commissioner may also insure any operating loss loan that meets the following conditions:

(1) The existing project mortgage:

(i) Shall have been insured by the Commissioner at any time before or after the date of enactment of the Housing and Community Development Act of 1987 and

(ii) Shall cover any property, other than a property upon which there is located a 1- to 4-family dwelling.

(2) The principal amount of the loan shall not exceed:

(i) 80 percent of the unreimbursed cash contributions made on or after March 18, 1987, by the project owner for the use of the project, to cover operating losses, as defined in paragraph (a) of this section, incurred during any period of consecutive months (not exceeding 24 months) in the first 10 years after the date of completion of the project, as determined by the Commissioner, or

(ii) An amount which, when added to the outstanding indebtedness relating to the property, does not exceed the maximum amount insurable under section 232 of the Act.

(3) The loan shall be made within 10 years after the end of the period of consecutive months referred to in paragraph (b)(2) of this section.

(4) The project shall meet all applicable underwriting and other requirements of the Commissioner at the time the loan is to be made.

(5) Any loan insured under this paragraph (b) shall:

(i) Bear interest at a rate agreed upon by the mortgagor and mortgagee;

(ii) Be secured in such manner as the Commissioner shall require;

(iii) Be limited to a term not exceeding the unexpired term of the original mortgage; and

(iv) Be insured under the same part of this chapter as the original mortgage.

(6) The Commissioner may provide insurance in accordance with § 232.31a(a) or under this paragraph (b), or under both paragraphs (a) and (b) of this section, in connection with an existing project mortgage, except that the Commissioner may not provide insurance under both of these paragraphs in connection with the same period of months referred to in paragraph (b)(2) of this section.

(7) Where the Commissioner has already provided insurance under § 232.31a(a), no more than one additional loan may be insured under this paragraph (b). Where no previous insurance has been provided under § 232.31(a), a maximum of two loans may be insured under this paragraph (b).

PART 234—CONDOMINIUM OWNERSHIP MORTGAGE INSURANCE

13. The authority citation for 24 CFR part 234 would continue to read as follows:

Authority: 12 U.S.C. 1707(a), 1715b, and 1715y; 42 U.S.C. 3535(d).

14. Section 234.531 would be revised to read as follows:

§ 234.531 Loans to cover operating loss.

(a) *Operating loss loans during the first two years.* (1) When the Commissioner determines that an operating loss has occurred during the first two years following completion of the project, the Commissioner may, in

his or her discretion, accept for insurance under this part, a loan to cover the loss. For the purposes of this section, an operating loss shall occur when the Commissioner determines that the total of the taxes, interest on the mortgage debt, mortgage insurance premiums, hazard insurance premiums, and the expenses of maintenance and operation of the project (excluding depreciation) exceeds the project income.

(2) The loan shall be secured by an instrument in a form approved by the Commissioner for use in the jurisdiction in which the project is located.

(3) The loan may bear interest at a rate agreed upon by the mortgagee and the mortgagor. Interest shall be payable in monthly installments on the principal then outstanding.

(4) The loan shall be limited to a term not exceeding the unexpired term of the original mortgage.

(b) *Other operating loss loans.* In addition to the insurance of loans to cover two-year operating losses under paragraph (a) of this section, the Commissioner may also insure any operating loss loan that meets the following conditions:

(1) The existing project mortgage:

(i) Shall have been insured by the Commissioner at any time before or after the date of enactment of the Housing and Community Development Act of 1987;

(ii) Shall cover any property, other than a property upon which there is located a 1- to 4-family dwelling; and

(iii) Shall not cover a subsidized project. For purposes of this paragraph (b)(1)(iii), subsidized projects are:

(A) Projects insured under section 236.

(B) Projects insured under the section 221(d)(3) Below Market Interest Rate (BMIR) program.

(C) Insured projects with Rent Supplement contracts.

(D) Insured projects with Rental Assistance Payments (RAP).

(E) Insured projects with project-based Section 8 assistance (e.g., new/sub rehab, mod rehab, project-based certificates, LMSA, Property Disposition).

(2) The principal amount of the loan shall not exceed:

(i) 80 percent of the unreimbursed cash contributions made on or after March 18, 1987, by the project owner for the use of the project, to cover operating losses (as defined in paragraph (a) of this section) incurred during any period of consecutive months (not exceeding 24 months) in the first 10 years after the date of completion of the project, as determined by the Commissioner, or

(ii) An amount which, when added to the outstanding indebtedness relating to the property, does not exceed the maximum amount insurable under section 234 of the Act.

(3) The loan shall be made within 10 years after the end of the period of consecutive months referred to in paragraph (b)(2) of this section.

(4) The project shall meet all applicable underwriting and other requirements of the Commissioner at the time the loan is to be made.

(5) Any loan insured under this paragraph (b) shall:

(i) Bear interest at a rate agreed upon by the mortgagor and mortgagee;

(ii) Be secured in such manner as the Commissioner shall require;

(iii) Be limited to a term not exceeding the unexpired term of the original mortgage; and

(iv) Be insured under the same part of this chapter on the original mortgage.

(6) The Commissioner may provide insurance in accordance with § 234.531(a) or under this paragraph (b), or under both paragraphs (a) and (b) of this section, in connection with an existing project mortgage, except that the Commissioner may not provide insurance under both of these paragraphs in connection with the same period of months referred to in paragraph (b)(2) of this section.

(7) Where the Commissioner has already provided insurance under § 234.531(a), no more than one additional loan may be insured under this paragraph (b). Where no previous insurance has been provided under § 234.531(a), a maximum of two loans may be insured under this paragraph (b).

PART 242—MORTGAGE INSURANCE FOR HOSPITALS

15. The authority citation for 24 CFR part 242 would continue to read as follows:

Authority: 12 U.S.C. 1715b, 1715n(f), and 1715z-7; 42 U.S.C. 3535(d).

16. Section 242.95 would be revised to read as follows:

§ 242.95 Loans to cover operating loss.

(a) *Operating loss loans during the first two years.* (1) When the Commissioner determines that an operating loss has occurred during the first two years following completion of the project, the Commissioner may, in his or her discretion, accept for insurance under this part, a loan to cover the loss. For the purposes of this section, an operating loss shall occur when the Commissioner determines that the total of the taxes, interest on the mortgage debt, mortgage insurance premiums, hazard insurance premiums, and the expenses of maintenance and operation of the project (excluding depreciation) exceeds the project income.

(2) The loan shall be secured by an instrument in a form approved by the Commissioner for use in the jurisdiction in which the project is located.

(3) The loan may bear interest at a rate agreed upon by the mortgagee and the mortgagor. Interest shall be payable in monthly installments on the principal then outstanding.

(4) The loan shall be limited to a term not exceeding the unexpired term of the original mortgage.

(b) *Other operating loss loans.* In addition to the insurance of loans to cover two-year operating losses under paragraph (a) of this section, the Commissioner may also insure any operating loss loan that meets the following conditions:

(1) The existing project mortgage:

(i) Shall have been insured by the Commissioner at any time before or after the date of enactment of the Housing and Community Development Act of 1987 and

(ii) Shall cover any property, other than a property upon which there is located a 1- to 4-family dwelling.

(2) The principal amount of the loan shall not exceed:

(i) 80 percent of the unreimbursed cash contributions made on or after March 18, 1987, by the project owner for the use of the project, to cover operating losses as defined in paragraph (a) of this section, during any period of consecutive months (not exceeding 24 months) in the first 10 years after the date of completion of the project, as determined by the Commissioner, or

(ii) An amount which, when added to the outstanding indebtedness relating to the property, does not exceed the maximum amount insurable under section 242 of the Act.

(3) The loan shall be made within 10 years after the end of the period of consecutive months referred to in paragraph (b)(2) of this section.

(4) The project shall meet all applicable underwriting and other requirements of the Commissioner at the time the loan is to be made.

(5) Any loan insured under this paragraph (b) shall:

(i) Bear interest at a rate agreed upon by the mortgagor and mortgagee;

(ii) Be secured in such manner as the Commissioner shall require;

(iii) Be limited to a term not exceeding the unexpired term of the original mortgage; and

(iv) Be insured under the same part of this chapter as the original mortgage.

(6) The Commissioner may provide insurance in accordance with § 242.95(a) or under this paragraph (b), or under both paragraphs (a) and (b) of this section, in connection with an existing project mortgage, except that the Commissioner may not provide insurance under both of these paragraphs in connection with the same period of months referred to in paragraph (b)(2) of this section.

(7) Where the Commissioner has already provided insurance under § 242.951(a), no more than one additional loan may be insured under this paragraph (b). Where no previous insurance has been provided under § 242.951(a), a maximum of two loans may be insured under this paragraph (b).

PART 244—MORTGAGE INSURANCE FOR GROUP PRACTICE FACILITIES [TITLE XI]

19. The authority citation for 24 CFR part 244 would be revised to read as follows:

Authority: 12 U.S.C. 1715b, 1749aaa–5; 42 U.S.C. 3535(d).

20. Section 244.38 would be revised to read as follows:

§ 244.38 Loans to cover operating loss.

(a) *Operating loss loans during the first two years.* (1) When the Commissioner determines that an operating loss has occurred during the first two years following completion of the project, the Commissioner may, in his or her discretion, accept for insurance under this part, a loan to cover the loss. For the purposes of this section, an operating loss shall occur when the Commissioner determines that the total of the taxes, interest on the mortgage debt, mortgage insurance premiums, hazard insurance premiums, and the expenses of maintenance and operation of the project (excluding depreciation) exceeds the project income.

(2) The loan shall be secured by an instrument in a form approved by the Commissioner for use in the jurisdiction in which the project is located.

(3) The loan may bear interest at a rate agreed upon by the mortgagee and the mortgagor. Interest shall be payable in monthly installments on the principal then outstanding.

(4) The loan shall be limited to a term not exceeding the unexpired term of the original mortgage.

(b) *Other operating loss loans.* In addition to the insurance of loans to cover two-year operating losses under paragraph (a) of this section, the Commissioner may also insure any operating loss loan that meets the following conditions:

(1) The existing project mortgage

(i) Shall have been insured by the Commissioner at any time before or after the date of enactment of the Housing and Community Development Act of 1987 and

(ii) Shall cover any property, other than a property upon which there is located a 1- to 4-family dwelling.

(2) The principal amount of the loan shall not exceed the lesser of the following:

(i) 80 percent of the unreimbursed cash contributions made on or after March 18, 1987, by the project owner for the use of the project, to cover operating losses, as defined in paragraph (a) of this section, incurred during any period of consecutive months (not exceeding 24 months) in the first 10 years after the date of completion of the project, as determined by the Commissioner, or

(ii) An amount which, when added to the outstanding indebtedness relating to the property, does not exceed the maximum amount insurable under section 244 of the Act.

(3) The loan shall be made within 10 years after the end of the period of consecutive months referred to in paragraph (b)(2) of this section.

(4) The project shall meet all applicable underwriting and other requirements of the Commissioner at the time the loan is to be made.

(5) Any loan insured under this paragraph (b) shall:

(i) Bear interest at a rate agreed upon by the mortgagor and mortgagee;

(ii) Be secured in such manner as the Commissioner shall require;

(iii) Be limited to a term not exceeding the unexpired term of the original mortgage; and

(iv) be insured under the same part of this chapter as the original mortgage.

(6) The Commissioner may provide insurance in accordance with § 244.38(a) or under this paragraph (b), or under both paragraphs (a) and (b) of this section, in connection with an existing project mortgage, except that the Commissioner may not provide insurance under both of these paragraphs in connection with the same period of months referred to in paragraph (b)(2) of this section.

(7) Where the Commissioner has already provided insurance under § 244.38(a), no more than one additional loan may be insured under this paragraph (b). Where no previous insurance has been provided under § 244.38(a), a maximum of two loans may be insured under this paragraph (b).

Dated: August 11, 1992.

Arthur J. Hill,

Assistant Secretary for Housing-Federal Housing Commissioner.

[FR Doc. 92–19521 Filed 8–17–92; 8:45 am]

BILLING CODE 4210–27–M

DEPARTMENT OF LABOR

Occupational Safety and health Administration

29 CFR Parts 1910, 1915, 1917, 1918, 1926, and 1928

[Docket No. H–020 A]

RIN 1218–AB26

Air Contaminants

AGENCY: Occupational Safety and Health Administration (OSHA), Department of Labor.

ACTION: Proposed rule; extension of comment period and postponement of hearings.

SUMMARY: The Occupational Safety and Health Administration (OSHA) proposed on June 12, 1992, at 57 FR 26002, to issue more protective exposure limits for 376 toxic substances for employees in the construction, maritime and agriculture industries. A comment period and hearings were scheduled. This proposal followed a similar final rule for air contaminants in general industry issued January 19, 1989, at 54 FR 2332.

On July 7, 1992, in *American Federation of Labor, et al.* v. *Occupational Safety and Health Administration*, (No. 89–7185 et al.), the Eleventh Circuit Court of Appeals vacated and remanded the general industry final rule for air contaminants. OSHA continues to believes that the final rule is necessary to protect worker health and is considering appropriate responses to the decision.

The Air Contaminant proposal for construction, maritime and agriculture is similar in approach to the general industry rule. Accordingly, the court's decision makes it advisable to extend the comment period and delay the hearings while future actions in response to the decision are implemented.

Therefore, OSHA is indefinitely extending the comment period which had been set to close September 25, 1992 for the proposal. OSHA is also postponing the hearings which had been scheduled for Washington, DC on October 20–30, 1992, San Diego, California on November 17–20, 1992 and

Des Moines, Iowa on December 8–11, 1992. OSHA is also withdrawing the requirement to file a notice of intention to appear by September 11, 1992.

The record for the Air Contaminants proposal for construction, maritime and agriculture will remain open, and parties may continue to submit comments to Docket No. H–020A. In approximately six months OSHA will publish a new closing date for comments and notices of intention to appear, and a new schedule for hearings. It is anticipated that when a new notice is published, approximately three months will be allowed for the close of the comment period and the commencement of hearings.

DATES: The comment period scheduled to close September 25, 1992 is indefinitely extended. The requirement to file a notice of intention to appear by September 11, 1992 is withdrawn. The hearings which had been scheduled for October, November and December, 1992 are postponed.

ADDRESSES: Written comments should be submitted to the OSHA Docket Office, Docket No. H–020A, room N–2634, U.S. Department of Labor, 200 Constitution Avenue, NW., Washington, DC 20210, telephone (202) 523–7894.

FOR FURTHER INFORMATION CONTACT: Mr. James F. Foster, U.S. Department of Labor, Occupational Safety and Health Administration, room N–3647, 200 Constitution Avenue, NW., Washington, DC 20210; telephone: (202) 523–8151.

Signed at Washington, DC this 12th day of August, 1992.

Dorothy L. Strunk,

Acting Assistant Secretary of Labor.

[FR Doc. 92–19591 Filed 8–17–92; 8:45 am]

BILLING CODE 4510–26–M#

DEPARTMENT OF THE INTERIOR

Office of Surface Mining Reclamation and Enforcement

30 CFR Part 913

Illinois Permanent Regulatory Program

AGENCY: Office of Surface Mining Reclamation and Enforcement (OSM), Interior.

ACTION: Proposed rule.

SUMMARY: OSM is announcing the receipt of a proposed amendment to the Illinois permanent regulatory program (hereinafter referred to as the Illinois program) under the Surface Mining Control and Reclamation Act of 1977 (SMCRA). The amendment is intended to make the requirements of the Illinois program no less effective than the Federal program, to enhance the clarity of Illinois' regulations, and to meet State codification rules and guidelines. It concerns changes made to the Illinois Administrative Code (IAC), title 62, Mining, chapter I.

This document sets forth the times and locations that the Illinois program and proposed amendment to that program are available for public inspection, the comment period during which interested persons may submit written comments on the proposed amendment and the procedures that will be followed regarding the public hearing, if one is requested.

DATES: Written comments must be received on or before 4 p.m. September 17, 1992. If requested, a public hearing on the proposed amendment will be held at 1 p.m. on September 14, 1992. Requests to present oral testimony at the hearing must be received on or before 4 p.m. on September 2, 1992.

ADDRESSES: Written comments should be mailed or hand delivered to: Mr. James F. Fulton, Director, Springfield Field Office, at the address listed below. Copies of the Illinois program, the proposed amendment, and all written comments received in response to this notice will be available for public review at the addresses listed below during normal business hours, Monday through Friday, excluding holidays. Each requester may receive, free of charge, one copy of the proposed amendment by contacting OSM's Springfield Office.

Office of Surface Mining Reclamation and Enforcement, Springfield Field Office, 511 West Capitol, suite 202, Springfield, Illinois 62704, Telephone: (217) 492–4495.

Illinois Department of Mines and Minerals, 300 West Jefferson Street, suite 300, Springfield, Illinois 62791, Telephone: (217) 782–4970.

FOR FURTHER INFORMATION CONTACT: James F. Fulton, Director, Springfield Field Office; (217) 492–4495.

SUPPLEMENTARY INFORMATION:

I. Background

On June 1, 1982, the Secretary of the Interior conditionally approved the Illinois program. Information pertinent to the general background of the Illinois submission, as well as the Secretary's findings, the disposition of comments, and a detailed explanation of the conditions of approval can be found in the June 1, 1982, **Federal Register** (47 FR 23883). Subsequent actions concerning the conditions of approval and program amendments are identified at 30 CFR 913.11, 913.15, 913.16, and 913.17.

II. Discussion of Proposed Amendment

OSM notified Illinois of deficiencies in its program regulations which were determined to be less effective than the Federal regulation requirements for surface mining and reclamation operations in the **Federal Register** decision notice of an Illinois program amendment approved by the Director on December 13, 1991 (56 FR 64986). Illinois identified additional regulations that required amendment in order to clarify their purposes and to be consistent with their Federal counterparts. Illinois is also taking this opportunity to reorganize its hearing regulations in order to more effectively carry out its responsibilities under the State Act. The amendment also contains nonsubstantive revisions to eliminate editorial and typographical errors and to accomplish necessary recodification required by the addition or deletion of provisions.

In response to the OSM notification and its own initiatives, Illinois by letter dated June 22, 1992 (Administrative Record No. IL–1192) submitted the following proposed changes to its program.

Illinois proposes the following revisions at 62 IAC 1701. Appendix A, which contains general definitions. Under the definition of "land use," the land use categories of "cropland," "pastureland," "grazingland," "recreation," "fish and wildlife habitat," and "developed water resources" are revised to define allowable support facilities and joint or seasonal uses within specific land use categories. The land use category of "undeveloped land or no current use or land management" is revised to limit its use to areas not to be affected by mining operations. The definition of "public park" is revised by adding the word "primarily" before the phrase "for public recreational use" to make it consistent with its Federal counterpart definition. A definition for "riparian zone" is added for clarification purposes. The definition of "valid existing rights" is deleted from this section and its substantive provisions are moved to part 62 IAC 1761. Statutory citations throughout the section are amended to reflect correct dates, and clerical errors are corrected.

Illinois proposes the following revisions at 62 IAC 1702.11 which contains application requirements and procedures for the exemption of coal extraction incidental to the extraction of other minerals. The heading "Application for exemption" is added to subsection (a). Subsection (a)(2) is revised by correcting the reference

citation. In subsection (f), the administrative review citation is revised to reflect reorganization of the Illinois hearing regulations, and a new sentence "The hearing shall be conducted in accordance with 62 Ill. Adm. Code 1847.3" is added.

At 62 IAC 1702.12(g), a typographical error is corrected.

Illinois proposes the following revisions at 62 IAC 1702.17, which provides revocation and enforcement of exemptions for coal extraction incidental to the extraction of other minerals. In subsection (c)(1) a notification provision in the event a decision is made not to revoke an exemption is added, and a typographical error is corrected. In subsections (c)(2) and (c)(3), the old administrative hearing section citation is revised to reflect reorganization of the Illinois hearing regulations.

At 1702.18(a)(1), a typographical error is corrected.

Illinois proposes to revise 62 IAC 1705.21 by changing the appeals procedures citation for restriction on financial interest of state employees in order to reflect reorganization of the Illinois hearing regulations.

Illinois proposes the following revisions at 62 IAC 1761 which contains provisions for areas designated by Act of Congress. A new § 1761.5 is added to define "valid existing rights" and to specify how such rights may be established.

Illinois proposes the following restrictions at 62 IAC 1761.11 which specifies the areas where mining is prohibited or limited. At subsection (g) a new sentence, "Cemeteries may be relocated if authorized by applicable State law or regulations," is added. Subsection (h) is removed since it is duplicative of other provisions.

Illinois proposes the following revisions at 62 IAC 1761.12 which contains procedures for implementing the limitations and prohibitions of § 1761.11. A new subsection (b) is added to specify what information must be submitted during the permitting process by a person claiming to have VER to mine in a § 1761.11 area, and the existing subsections are redesignated (c) through (h). It is clarified in subsection (c)(2) that VER is not something that is requested, but rather an assertion by an operator that he has the right to conduct mining within a prohibited area. Subsections (d) and (e) are changed to clarify that they contain procedures for those cases where the mining applicant does not have VER. Subsection (d)(4) is changed to clarify that the road authority does not make any determination for mining activity within 100 feet of a road, and the word "affected" is moved to modify both "public" and "landowners." A heading, "Effect of waiver," is added for subsection (e)(3). The administrative and judicial review code citations in subsection (h) are changed to reflect the reorganization of the Illinois hearing regulations.

At 62 IAC 1764.19(d), Illinois proposes to revise the judicial review citation in order to reflect the reorganization of the Illinois hearing regulations.

At 62 IAC 1772.12(e), Illinois proposes to add a section heading, "Notice and review," and the administrative and judicial review citation in paragraph (2) is changed to reflect reorganization of the Illinois hearing regulations.

Illinois proposes the following revisions to 62 IAC 1773.13 which contains provisions for public participation in permit application processing. Subsection (a)(1)(E) is revised to require that permit applicants, in specified instances, include in their advertisement a description of the activities proposed within 100 feet of a road. Subsection (c)(2) is revised by changing the time limit within which the Department must hold an informal conference regarding its decision on a permit application from 75 days to a reasonable time. Subsection (d)(3) is revised by updating the statutory citation date.

Illinois proposes the following revisions at 62 IAC 1773.15 which contains the requirements for review of permit applications. Subsection (b)(1)(B) is revised to clarify that any review under 30 CFR 775.13 will be conducted by the federal district court and not the state circuit court. Administrative and judicial appeal citations are revised in subsections (b)(1)(B) and (b)(3) to reflect reorganization of the Illinois hearing regulations. A typographical error is corrected in subsection (c)(12). The existing language in subsection (d) is removed, and new language is proposed which provides for expiration of the written findings within one year if performance bond and permit fees are not submitted by the applicant.

Illinois proposes at 62 IAC 1773.20(b)(2)(B) and 62 IAC 1773.21(c) to revise administrative and judicial review citations in order to reflect reorganization of the Illinois hearing regulations.

Illinois proposes at 62 IAC 1774.11 to revise the administrative and judicial review citation in subsection (c) in order to reflect reorganization of the Illinois hearing regulations.

Illinois proposes the following revisions at 62 IAC 1774.13 which contains the provisions for permit revisions. Subsection (b)(2)(E) is revised to define under what circumstances a significant permit revision would be required for land use changes. Subsection (d)(2) is revised to clarify that incidental boundary revisions are allowable if contiguous to the shadow area and to allow non-contiguous incidental boundary revisions for long-term surface support facilities at underground mines.

Subsection (d)(4) is revised to clarify that non-contiguous incidental boundary revisions will be subject to the performance standards for minor underground facilities. Subsection (d)(5) is revised to limit the amount of acreage which may be added to an existing non-contiguous incidental boundary area. A new subsection (d)(6) is added to provide public notice and comment for incidental boundary revision applications. Old subsection (d)(6) is redesignated as subsection (e). The administrative and judicial review citation in subsection (f) is revised to reflect reorganization of the Illinois hearing regulations.

Illinois proposes to repeal part 62 IAC 1775, which contained the requirements and procedures for administrative and judicial review of administrative decisions, in order to reflect reorganization of the Illinois hearings regulations. The substantive provisions of part 62 IAC 1775 are incorporated into proposed new part 62 IAC 1847.

At 62 IAC 1777.17, which contains the requirements for submission of permit fees, Illinois proposes the following revisions. New subsection (a) contains the provisions of old subsection (c). New subsections (b)(1) and (b)(2) contain the provisions of old subsections (a) and (b). New subsection (c) adds provisions for payment of permit fees. New subsection (d) adds the provision that failure to submit permit fees within one year after the issuance of written findings approving a permit application will result in the expiration of the findings.

At 62 IAC 1778.15, which contains provisions for right-of-entry information, Illinois proposes the following revisions. The first proposed revision to subsection (a) eliminates confusion by deleting the words "and related surface activities" from the first sentence. The second proposed revision to subsection (a) clarifies that the permit applicant must provide a description of the documents upon which it bases its legal right to enter and mine, rather than the actual documents, and that Illinois has the authority to require the documents during the permitting process. New subsection (e) is added to clarify that permit applicants claiming valid existing

rights must comply with additional permitting requirements.

At 62 IAC 1779.19(b), a comma is added to separate a dependent clause from an independent clause, and the reference regulation citation is corrected.

Illinois proposed the following revisions at 62 IAC 1780 which contains the minimum requirements for the reclamation and operation plans for surface mining permit applications. Section 1780.21 contains the requirements for hydrologic information, and the revisions to subsections (b)(1)(A) and (b)(1)(B) require additional hydrologic information from the applicant. In § 1780.33, a clerical error in a reference citation is corrected in the first paragraph. The repeal of § 1780.38 is proposed in order to be consistent with Federal regulations.

At 62 IAC 1783.19(b), a reference regulation citation is corrected.

Illinois proposes the following revisions at 62 IAC 1784 which contains the minimum requirements for the reclamation and operation plans for underground mining permit applications. Section 1784.14 contains the requirements for hydrologic information, and subsections (b)(1)(A) and (b)(1)(B) are revised to require additional hydrologic information from the applicant. In § 1784.18, a clerical error in a reference regulation citation is corrected in the first paragraph. The repeal of § 1784.27 is proposed in order to be consistent with Federal regulations.

At 62 IAC 1785.13, revisions are proposed for two subsections. In subsection (a), a statute citation date is updated and a regulation citation is revised. In subsection (g), the administrative and judicial review citation is revised to reflect reorganization of the Illinois hearing regulations.

Illinois proposes the following revisions at 62 IAC 1800.11 which contains provisions for the filing of a performance bond. Subsection (a) is proposed to be revised by adding paragraph (1) to clarify that failure to file a performance bond within one year of the written findings approving a permit application will result in the expiration of the findings and by adding paragraph (2) to provide provisions and restrictions for filing of a minimum performance bond. A heading, "Bond coverage," is added to subsection (b). Illinois proposes the following revisions at 62 IAC 1800.40 which contains provisions for the release of performance bonds. Subsection (a)(3) is added to require the permittee to include with his bond release application a notarized statement certifying that all statutory and regulatory requirements have been met. The bond release hearing provisions are removed from subsections (e) through (h) and are added to 62 IAC 1847.9 to reflect reorganization of the Illinois hearing regulations.

Illinois proposes the following revisions at 62 IAC 1800.50 which contains the requirements for forfeiture of bonds. The bond forfeiture hearing provisions are removed from subsections (c)(2) through (c)(5) and are added to 62 IAC 1847.7 to reflect reorganization of the Illinois hearing regulations. A heading, "Reclamation costs," is added at subsection (e). Subsection (g) is added to clarify Illinois' policy that it may elect not to proceed with state enforcement action during bond forfeiture proceedings in specified situations.

Illinois proposes to revise 62 IAC 1816.42, which contains hydrologic balance requirements for surface mining activities, by updating citations in order to reflect the Illinois Department of Mines and Minerals, Land Reclamation Division's designation as a regulatory authority pursuant to 35 Ill. Adm. Code 620 and to require additional information necessary to implement groundwater quality standards.

Illinois proposes the following revision at 62 IAC 1816.43 which contains requirements for diversions for surface mining activities. The proposed revision to subsection (a)(2)(D) corrects the date for the statutory citation. Subsection (b)(4) is amended to clarify the design standard for post-mining riparian zones.

Illinois proposes the following revisions at 62 IAC 1816.49 which contains requirements for impoundments. Subsection (a)(9)(B) is revised to require quarterly inspections during construction with the provision that at least one inspection be conducted for impoundments completed in less than one quarter. A minor wording change is proposed for subsection (a)(10). The existing temporary impoundment provisions of subsections (c)(2)(A) and (c)(2)(B) are reorganized into subsection (c)(2)(A) and an alternate spillway system provision is added to subsection (c)(2)(B).

Illinois proposes to revise 62 IAC 1816.84(b)(2), which contains construction requirements for coal mine waste impounding structures, by providing a spillway capacity to safely pass, adequate storage capacity to safely contain, or a combination of storage capacity and spillway capacity to safely control the probable maximum precipitation of a 6-hour precipitation event or greater event as specified by Illinois.

Illinois proposes the following revisions at 62 IAC 1816.116 which contains requirements for revegetation success standards for surface mining operations. The proposed revisions to subsection (a)(2)(C) further define normal husbandry practices in Illinois. The proposed revisions to subsections (a)(3)(A) and (a)(3)(B) specify the percentage of ground cover required for each land use and when in the responsibility period the ground cover is to be measured. Proposed revisions to subsections (a)(3)(C) and (a)(3)(E) specify proper management of cropland, pasture, hayland, and grazingland during the responsibility period if the productivity standards have been met prior to the last year of the responsibility period. A proposed revision to subsection (b)(2) adds language that specifies that the report of reclamation activities conducted during the previous calendar year are ones which initiate or alter the responsibility period and deletes old language of a partial listing of activities to be reported.

Illinois proposes the following revisions at 62 IAC 1816.117 which contains the revegetation requirements for tree and shrub vegetation. A proposed revision to subsection (a)(1) eliminates any confusion as to when success of vegetation for trees and shrubs shall be determined by specifying the fifth year of the responsibility period or later in the responsibility period. A proposed revision to subsection (a)(2) adds the requirement that vegetative ground cover shall not be less than 70 percent during the last year of the responsibility period. A proposed revision to subsection (a)(5) adds references to all of the normal conservation practices approved for rill and gully repairs in 62 IAC 1816.116. The proposed revision to subsection (b) clarifies the tree or shrub population requirement for riparian zones. It is proposed that subsection (d)(6) be deleted since the substantive provisions are added to other sections.

Illinois proposes to revise 62 IAC 1816.151(b), which contains requirements for primary roads, by adding design standards as an alternative to the minimum static factor of safety of 1.3.

Illinois proposes to revise 62 IAC 1817.42, which contains hydrologic balance requirements for underground mining activities, by updating citations in order to reflect the Illinois Department of Mines and Minerals,

Land Reclamation Division's designation as a regulatory authority pursuant to 35 Ill. Adm. Code 620 and to require additional information necessary to implement groundwater quality standards.

Illinois proposes the following revisions at 62 IAC 1817.43 which contains requirements for diversions for underground mining operations. The proposed revision to subsection (a)(2)(D) corrects the date within the statutory citation. Subsection (b)(4) is amended to clarify the design standard for post-mining riparian zones.

Illinois proposes the following revisions at 62 IAC 1817.49 which contains requirements for impoundments for underground mining operations. Subsection (a)(9)(B) is revised to require quarterly inspections during construction with the provision that at least one inspection be conducted for impoundments completed in less than one quarter. A minor wording change is proposed for subsection (a)(10). The existing temporary impoundment provisions of subsections (c)(2)(A) and (c)(2)(B) are proposed to be reorganized into subsection (c)(2)(A). An alternate spillway system provision is proposed in subsection (c)(2)(B).

Illinois proposes to revise 62 IAC 1817.84(b)(2), which contains construction requirements for coal mine waste impounding structures, to provide a spillway capacity to safely pass, adequate storage capacity to safely contain, or a combination of storage capacity and spillway capacity to safely control the probable maximum precipitation of a 6-hour precipitation event or greater event as specified by Illinois.

Illinois proposes the following revisions at 62 IAC 1817.116 which contains requirements for revegetation success standards for underground mining operations. A typographical error is corrected in subsection (a)(2)(A). The proposed revisions to subsection (a)(2)(C) further define normal husbandry practices in Illinois. The proposed revisions to subsection (a)(3)(A) and (a)(3)(B) specify the percentage of ground cover required for each land use and when in the responsibility period the ground cover is to be measured. A typographical error is corrected in subsection (a)(3)(C). Proposed revisions to subsections (a)(3)(C) and (a)(3)(E) specify proper management of cropland, pasture, hayland, and grazingland during the responsibility period if the productivity standards have been met prior to the last year of the responsibility period. A proposed revision to subsection (b)(2) adds language that specifies that the report of reclamation activities conducted during the previous calendar year are ones which initiate or alter the responsibility period and deletes old language of a partial listing of activities to be reported.

Illinois proposes the following revision at 62 IAC 1817.117 which contains the revegetation requirements for tree and shrub vegetation for underground mining operations. A proposed revision to subsection (a)(1) eliminates any confusion as to when success of vegetation for trees and shrubs shall be determined by specifying the fifth year of the responsibility period or later in the responsibility period. A proposed revision to subsection (a)(2) adds the requirement that vegetative ground cover shall not be less than 70 percent during the last year of the responsibility period. A proposed revision to subsection (a)(5) adds references to all of the normal conservation practices approved for rill and gully repairs in 62 IAC 1817.116. The proposed revision to subsection (b) clarifies the tree or shrub population requirement for riparian zones. A sentence deletion in subsection (c)(4) corrects a clerical error. It is proposed that subsection (d)(6) be deleted since the substantive provisions are added to other sections.

Illinois proposes to revise 62 IAC 1817.151(b) which contains requirements for primary roads for underground mining operations, by adding design standards as an alternative to the minimum static factor of safety of 1.3.

Illinois proposes the following revisions at 62 IAC 1817.182 which contains requirements regarding minor underground mine facilities. A regulation citation is corrected in subsection (a). A heading, "Roads," is added at subsection (d). Subsections (d)(2), (d)(3)(C) and (d)(4)(B) are proposed to be revised by updating the regulation code citations.

Illinois proposes the following revisions at 62 IAC 1827.12 which contains performance standards for coal preparation plants not located within the permit area of a mine. A regulation code citation is updated in subsection (b). A revision to subsection (d) adds ground water quality compliance requirements for coal preparation plants and removes the phrase "all discharges from these areas."

Illinois proposes to revise 62 IAC 1843.12(i) by updating the state enforcement appeal citation in order to reflect reorganization of the Illinois hearing regulations.

Illinois proposes the following revisions at 62 IAC 1843.13 which contains requirements for suspension or revocation of permits. A heading, "Requirements," added for subsection (a), and a heading, "Considerations," is added for subsection (a)(4). In subsection (c), the hearing regulation citation for an order to show cause is revised to reflect reorganization of the Illinois hearing regulations. The hearing and review provisions for show cause orders are removed from subsections (e) through (i) and (k) and added to 62 IAC 1847.6 to reflect reorganization of the Illinois hearing regulations. Subsection (j) is redesignated as (f).

At 62 IAC 1843.14(a)(2), additional alternative means of service of notices of violation, cessation orders and show cause orders are proposed. Illinois is proposing a revision at 62 IAC 1843.15(a) to clarify that an informal public hearing for a notice of violation or cessation order which requires cessation of mining may be waived.

Illinois is proposing to repeal 62 IAC 1843.16, which contained provisions for a formal review of citations, since its substantive provisions are added to 62 IAC 1847.4 in order to reflect reorganization of the Illinois hearing regulations.

Illinois is proposing to repeal 62 IAC 1843.17, which contained provisions for temporary injunctive relief for enforcement citations, since its substantive provisions are added to 62 IAC 1847.4(o) In order to reflect reorganization of the Illinois hearing regulations.

Illinois is proposing to repeal 62 IAC 1843.20, which contained provisions for intervention in state enforcement proceedings, since its substantive provisions are added to 62 IAC 1848.8 in order to reflect reorganization of the Illinois hearing rules.

Illinois is proposing to repeal 62 IAC 1843.21, which contained provisions for discovery in state enforcement proceedings, since its substantive provisions are added to 62 IAC 1848.9 in order to reflect reorganization of the Illinois hearing regulations.

Illinois proposes to revise 62 IAC 1845.12, which provides provisions for penalty assessment, by adding new subsections (c) and (d) to clarify Illinois' policy and practice that an assessment below $1,100 is not required to be paid unless it is the permittee's second related violation within a 12-month period.

Illinois is proposing the following revisions at 62 IAC 1845.13(b)(4) which provides provisions for the award of good faith credit for achieving rapid compliance in the abatement of a violation. Paragraphs (A) is revised to

clarify that good faith credit awards are based upon rapid compliance and extraordinary measures, rather than simply abating the violation within the time set for abatement. Paragraph (B) was revised to define rapid compliance. Paragraph (C) was added to clarify that good faith credit would not be awarded for normal compliance, and defines normal compliance. Paragraph (D) was added to clarify Illinois' policy and practice that administrative violations are not eligible for good faith credit awards.

Illinois is proposing the following revisions at 62 IAC 1845.17 which provides procedures for assessment of civil penalties. Subsection (b) is revised to provide an alternative means of service of proposed assessments. Subsections (b)(2)(B) and (c) are revised by updating the hearing regulation citations to reflect reorganization of the Illinois hearing regulations. Illinois is proposing the following revisions at 62 IAC 1845.18, which contains requirements for payment of a penalty. Subsection (a)(2) is revised by updating the hearing regulation citation, and subsection (c) is removed and added to 62 IAC 1847.5(a) to reflect reorganization of the Illinois hearing regulations.

Illinois proposes to repeal 62 IAC 1845.19, which contains procedures for civil penalty administrative and judicial hearings, since its substantive provisions are added to 62 IAC 1847.5 in order to reflect reorganization of the Illinois hearing regulations.

Illinois proposes that the hearing regulation citation at 62 IAC 1845.20(a) be updated to reflect reorganization of the Illinois hearing regulations.

Illinois proposes that the administrative review regulation citation at 62 IAC 1846.17(b)(1) be updated to reflect reorganization of the Illinois hearing regulations.

Illinois proposes that the administrative review regulation citation for civil penalty assessments at 62 IAC 1846.18(b) be updated to reflect reorganization of the Illinois hearing regulations

Illinois proposes new part 62 IAC 1847, which contains provisions for the various types of Illinois administrative reviews, in order to reorganize the Illinois hearing regulations for consistency and clarity.

Illinois proposes new part 62 IAC 1848, which contains general rules relating to procedure and practice applicable to administrative hearings, in order to reorganize the Illinois hearing regulations for consistency and clarity.

III. Public Comments Procedures

In accordance with the provisions of 30 CFR 732.17(h), OSM is seeking comments on whether the proposed amendment satisfies the applicable program approval criteria of 30 CFR 732.15.

If the amendment is deemed adequate, it will become part of the Illinois program.

Written Comments

Written comments should be specific, pertain only to the issues proposed in this rulemaking, and include explanations in support of the commenter's recommendations. Comments received after the time indicated under "**DATES**" or at locations other than the OSM Springfield Field Office will not necessarily be considered and included in the Administrative Record for the final rulemaking.

Public Hearing

Persons wishing to comment at the public hearing should contact the person listed under "**FOR FURTHER INFORMATION CONTACT**" by 4 p.m. on September 2, 1992. If no one requests an opportunity to comment at a public hearing, the hearing will not be held.

Filing of a written statement at the time of the hearing is requested as it will greatly assist the transcriber. Submission of written statements in advance of the hearing will allow OSM officials to prepare adequate responses and appropriate questions.

The public hearing will continue on the specified date until all persons scheduled to comment have been heard. Persons in the audience who have not been scheduled to comment, and who wish to do so, will be heard following those scheduled. The hearing will end after all persons scheduled to comment and persons present in the audience who wish to comment have been heard.

Public Meeting

If only one person requests an opportunity to comment at a hearing, a public meeting rather than a public hearing, may be held. Persons wishing to meet with OSM representatives to discuss the proposed amendment may request a meeting at the OSM office listed under "**ADDRESSES**" by contacting the person listed under "**FOR FURTHER INFORMATION CONTACT**". All such meetings will be open to the public, and, if possible, notices of meetings will be posted at the locations under "**ADDRESSES**". A written summary of each meeting will be made a part of the Administrative Record.

Executive Order No. 12291 and the Regulatory Flexibility Act

On July 12, 1984, the Office of Management and Budget (OMB) granted OSM an exemption from sections 3, 4, 7, and 8 of Executive order 12291 for actions related to approval or conditional approval of State regulatory programs. Therefore, preparation of a regulatory impact analysis and OMB regulatory review is not required.

The Department of the Interior has determined that this rule will not have a significant economic impact on a substantial number of small entities under the Regulatory Flexibility Act (5 U.S.C. 601 *et seq.*). The State submittal which is the subject of this rule is based upon counterpart Federal regulations for which an economic analysis was prepared and certification made that such regulations would not have a significant economic effect upon a substantial number of small entities. Hence, this rule will ensure that existing requirements previously promulgated by OSM will be implemented by the State. In making the determination as to whether this rule would have a significant economic impact, the Department relied upon the data and assumption for the counterpart Federal regulations.

Executive Order 12778

The Department of the Interior has conducted the reviews required by section 2 of Executive Order 12778 and has determined that, to the extent allowed by law, this rule meets the applicable standards of subsections (a) and (b) of that section. However, these standards are not applicable to the actual language of State regulatory programs and program amendments since each such program is drafted and promulgated by a specific State, not by OSM. Under section 503 and 505 of SMCRA (30 U.S.C. 1253 and 1255) and 30 CFR 730.11, 732.15, and 732.17(h) (10), decisions on proposed State regulatory programs and program amendments submitted by the State must be based solely on a determination of whether the submittal is consistent with SMCRA and its implementing Federal regulations and whether the requirements of 30 CFR part 730, 731, and 732 have been met.

Paperwork Reduction Act

This rule does not contain information collection requirements which require approval by the Office of Management and Budget under the Paperwork Reduction Act 44 U.S.C. 3507 *et seq.*

List of Subjects in 30 CFR Part 913

Intergovernmental relations, Surface mining, Underground mining.

Dated: July 10, 1992.

Jeffrey D. Jarrett,

Acting Assistant Director, Eastern Support Center.

[FR Doc. 92-19575 Filed 8-17-92; 8:45 am]

BILLING CODE 4310-05-M

---

30 CFR Part 916

Kansas Permanent Regulatory Program

AGENCY: Office of Surface Mining Reclamation and Enforcement (OSM), Interior.

ACTION: Proposed rule; public comment period and opportunity for public hearing on proposed amendment.

SUMMARY: OSM is announcing the receipt of a proposed amendment to the Kansas permanent regulatory program (hereinafter, the "Kansas program") under the Surface Mining Control and Reclamation Act of 1977 (SMCRA). The proposed amendment consists of changes to provisions of the Kansas regulations pertaining to general requirements, definitions, permit application, public hearings, civil penalties, permit review, coal exploration, bonding procedures, performance standards, underground mining, small operator assistance, lands unsuitable for mining, blaster and enforcement. The amendment is intended to revise the State program to be consistent with the corresponding Federal standards, clarify ambiguities, and improve operational efficiency.

This document sets forth the times and locations that the Kansas program and proposed amendment to that program are available for public inspection, the comment period during which interested persons may submit written comments on the proposed amendment, and procedures that will be followed regarding the public hearing, if one is requested.

DATES: Written comments must be received by 4 p.m., c.d.t. September 17, 1992. If requested, a public hearing on the proposed amendment will be held on September 14, 1992. Requests to present oral testimony at the hearing must be received by 4 p.m., c.d.t. on September 2, 1992.

ADDRESSES: Written comments should be mailed or hand delivered to Jerry R. Ennis at the address listed below.

Copies of the Kansas program, the proposed amendment, and all written comments received in response to this notice will be available for public review at the addresses listed below during normal business hours, Monday through Friday, excluding holidays. Each requester may receive one free copy of the proposed amendment by contacting OSM's Kansas City Field Office.

Jerry R. Ennis, Director, Kansas City Field Office, Office of Surface Mining Reclamation and Enforcement, 934 Wyandotte, room 500, Kansas City, MO 64105, Telephone: (816) 374-6405.

Kansas Department of Health and Environment, Surface Mining Section, 1501 S. Joplin, P.O. Box 1418, Pittsburg, KS 66762, Telephone: (316) 231-8615.

FOR FURTHER INFORMATION CONTACT: Jerry R. Ennis, telephone: (816) 374-6405.

SUPPLEMENTARY INFORMATION:

I. Background on the Kansas Program

On January 21, 1981, the Secretary of Interior conditionally approved the Kansas program. General background information on the Kansas program, including the Secretary's findings, the disposition of comments, and the conditions of approval of the Kansas program can be found in the January 21, 1981, **Federal Register** (46 FR 5892). Subsequent actions concerning Kansas' program and program amendments can be found at 30 CFR 916.12, 916.15, and 916.16.

II. Proposed Amendment

By letter dated July 10, 1992, (Administrative Record No. KS-511) Kansas submitted a proposed amendment to its program pursuant to SMCRA. Kansas submitted the proposed amendment with the intent of satisfying the required program amendments at 30 CFR 916.16(b) and at the States own initiative to improve its program.

The regulations that Kansas proposes to amend are: Kansas Administrative Regulations (K.A.R.) 47-1-9, Notice of Citizen Suits; 47-2-14, Complete and Accurate Application Defined; 47-2-53a, Regulatory Program Defined; 47-2-58, Significant, Imminent Environmental Harm to Land, Air, or Water Resources Defined; 47-2-67, Surety Bond Defined; 47-2-75, Definitions-Adoption by Reference; 47-3-2, Application for Mining Permit-Adoption by Reference; 47-3-3a, Application for Mining Permit-Maps; 47-3-42, Application for Mining Permit-Adoption by Reference; 47-4-14a, Administrative Hearing Procedure; 47-4-15, Administrative Hearings, Discovery; 47-4-17, Administrative Hearings, Award of Costs and Expenses; 47-5-5a, Civil Penalties-Adoption by Reference; 47-5-16, Civil Penalties-Final Assessment and Payment; 47-6-1, Permit Review; 47-6-3, Permit Renewals-Adoption by Reference; 47-6-4, Permit Transfers, Assignments, and Sales-Adoption by Reference; 47-6-7, Permit Suspension or Revocation; 47-6-8, Termination of Jurisdiction-Adoption by Reference; 47-6-9, Exemption for Coal Extraction Incident to Government Financed Highway or Other Construction-Adoption by Reference; 47-6-10, Exemption for Coal Extraction Incidental to the Extraction of Other Minerals-Adoption by Reference; 47-7-2, Coal Exploration-Adoption by Reference; 47-8-9, Bonding Procedures-Adoption by Reference; 47-8-11, Use of Forfeited Bond Funds; 47-9-1, Performance Standards-Adoption by Reference; 47-9-4, Interim Program Performance Standards-Adoption by Reference; 47-10-1, Underground Mining-Adoption by Reference; 47-11-8, Small Operator Assistance Program-Adoption by Reference; 47-12-4, Lands Unsuitable for Surface Mining-Adoption by Reference; 47-13-4, Training and Certification of Blasters-Adoption by Reference; 47-13-5, Responsibilities of Operators and Blasters-in-Charge; 47-14-7, Employee Financial Interest-Adoption by Reference; 47-15-1a, Inspection and Enforcement-Adoption by Reference; 47-15-4, Injunctive Relief; 47-15-7, State Inspections; and 47-15-8, Citizen's Request for State Inspections.

III. Public Comment Procedures

In accordance with the provisions of 30 CFR 732.17(h), OSM is seeking comments on whether the proposed amendment satisfies the applicable programs criteria of 30 CFR 732.15. If the amendment is deemed adequate, it will become part of the Kansas program.

Written Comments

Written comments should be specific, pertain only to the issue proposed in this rulemaking, and include explanations in support of the commenter's recommendations. Comments received after the time indicated under **DATES** or at locations other than the Kansas City Field Office will not necessarily be considered in the final rulemaking or included in the administrative record.

Public Hearing

Persons wishing to testify at the public hearing should contact the person listed under **FOR FURTHER INFORMATION CONTACT** by 4 p.m., c.d.t. September 2, 1992. The location and time of the hearing will be arranged with those persons requesting the hearing. If no one requests an opportunity to testify at the public hearing, the hearing will not be held.

Filing of a written statement at the time of the hearing is requested as it will greatly assist the transcriber. Submission of written statements in advance of the hearing will allow OSM officials to prepare adequate responses and appropriate questions.

The public hearing will continue on the specified date until all persons scheduled to comment have been heard. Persons in the audience who have not been scheduled to testify, and who wish to do so, will be heard following those who have been scheduled. The hearing will end after all persons scheduled to testify and persons present in the audience who wish to testify have been heard.

Public Hearing

If only one person requests an opportunity to testify at a hearing, a public hearing, rather than a public hearing, may be held. Persons wishing to meet with OSM representatives to discuss the proposed amendment may request a meeting at the OSM office listed under **FOR FURTHER INFORMATION CONTACT.** All such meetings will be open to the public and, if possible, notices of meetings will be posted at the locations listed under **ADDRESSES.** A written summary of each meeting will be made part of the administrative record.

IV. Procedural Determinations

Executive Order No. 12291 and the Regulatory Flexibility Act

On July 12, 1984, the Office of Management and Budget (OMB) granted OSM an exemption from sections 3, 4, 7, and 8 of Executive Order 12291 for actions related to approval or conditional approval of State regulatory programs. Therefore, preparation of a regulatory impact analysis and OMB regulatory review is not required.

The Department of the Interior has determined that this rule will not have a significant economic impact on a substantial number of small entities under the Regulatory Flexibility Act (5 U.S.C. 601 *et seq.*). The State submittal which is the subject of this rule is based upon counterpart Federal regulations for which an economic analysis was prepared and certification made that such regulations would not have a significant economic effect upon a substantial number of small entities. Hence, this rule will ensure that existing requirements previously promulgated by OSM will be implemented by the State. In making the determination as to whether this rule would have a significant economic impact, the Department relied upon the data and assumption for the counterpart Federal regulations.

Executive Order 12778

The Department of the Interior has conducted the reviews required by section 2 of Executive Order 12778 and has determined that, to the extent allowed by law, this rule meets the applicable standards of subsections (a) and (b) of that section. However, these standards are not applicable to the actual language of State regulatory programs and program amendments since each such program is drafted and promulgated by a specific State, not by OSM. Under section 503 and 505 of SMCRA (30 U.S.C. 1253 and 1255) and 30 CFR 730.11, 732.15, and 732.17(h) (10), decisions on proposed State regulatory programs and program amendments submitted by the State must be based solely on a determination of whether the submittal is consistent with SMCRA and its implementing Federal regulations and whether the requirements of 30 CFR part 730, 731, and 732 have been met.

Paperwork Reduction Act

This rule does not contain information collection requirements that require approval by OMB under 44 U.S.C. 3507.

List of Subjects in 30 CFR Part 916

Intergovernmental relations, Surface mining, Underground mining.

Dated: July 15, 1992.

Raymond L. Lowrie,

Assisant Director, Western Support Center.

[FR Doc. 92-19577 Filed 8-17-92; 8:45 am]

BILLING CODE 4310-05-M

---

30 CFR Part 920

Maryland Permanent Regulatory Program; Excess Spoil

AGENCY: Office of Surface Mining Reclamation and Enforcement (OSM), Interior.

ACTION: Proposed rule.

SUMMARY: OSM is announcing receipt and requesting comments on a proposed amendment to the Maryland permanent regulatory program (hereinafter referred to as the Maryland program) under the Surface Mining Control and Reclamation Act of 1977 (SMCRA). The amendment allows excess spoil from a permitted area to be placed on an abandoned mine land site to aid reclamation.

This document sets forth the times and locations that the Maryland program and the proposed amendment to that program are available for public inspection, the comment period during which interested persons may submit written comments on the amendment and the procedures that will be followed regarding the public hearing, if one is requested.

DATES: Written comments must be received on or before 4 p.m. on September 17, 1992 to ensure consideration in the rulemaking process. If requested, a public hearing on the amendment will be held at 9 a.m. on September 14, 1992. Requests to present oral testimony at the hearing must be received on or before 4 p.m. on September 2, 1992.

ADDRESSES: Written comments and requests to testify at the hearing should be mailed or hand delivered to Robert J. Biggi, Director, Harrisburg Field Office, at the address listed below. Copies of the Maryland program, the proposed amendment, and all written comments received in response to this notice will be available for public review at the addresses listed below during normal business hours, Monday through Friday, excluding holidays.

Each requestor may receive, free of charge, one copy of the proposed amendment by contacting OSM's Harrisburg Field Office:

Office of Surface Mining Reclamation and Enforcement, Harrisburg Field Office, Harrisburg Transportation Center, Third Floor, suite 3C, 4th and Market Streets, Harrisburg, Pennsylvania 17101, Telephone: (717) 782-4036.

Maryland Bureau of Mines, 160 South Water Street, Frostburg, Maryland 21532, Telephone (301) 689-4136.

A public hearing, if held, will be at the Penn Harris Motor Inn and Convention Center at the Camp Hill Bypass and U.S. Routes 11 and 15, Camp Hill, Pennsylvania, or at some other location in the area of interested parties.

FOR FURTHER INFORMATION CONTACT: Robert J. Biggi, Director, Harrisburg Field Office, (717) 782-4036.

SUPPLEMENTARY INFORMATION:

I. Background on the Maryland Program

The Secretary of the Interior approved the Maryland program on February 18, 1982. Information on the background of the Maryland program including the Secretary's findings, the disposition of comments and a detailed explanation of the conditions of approval of the Maryland program can be found in the February 18, 1982, **Federal Register** (47 FR 7214-7217). Subsequent actions concerning amendments to the Maryland Program are in 30 CFR 920.15 and 30 CFR 920.16.

II. Discussion of Amendment

The Maryland Bureau of Mines submitted a program amendment to OSM on June 23, 1992. The amendment (Administrative Record Number MD-555.00) is a copy of the Maryland General Assembly's House of Delegates Bill Number 1234. The bill that is now referenced as chapter 599 of the 1992 laws of Maryland revises the section 7-508(b) of the Natural Resources Article, Annotated Code of Maryland by adding paragraph (b)(2). The new paragraph allows excess spoil from a permitted area to be placed on an abandoned mine site. To be considered excess, the spoil must not be needed to achieve approximate original contour or to meet any other permit requirements. Excess spoil placement must be approved by the Maryland Department of Natural Resources. Chapter 599, signed by the Governor on May 26, 1992, takes effect on October 1, 1992.

III. Public Comment Procedures

In accordance with the provisions of 30 CFR 732.17(h), OSM is now seeking comments on whether the amendments proposed by Maryland satisfy the applicable program approval criteria of 30 CFR 732.15. If the amendments are deemed adequate, they will become part of the Maryland program.

Written Comments

Written comments should be specific, pertain only to the issues proposed in this rulemaking, and include explanations in support of the commenter's recommendations. Comments received after the time indicated under **DATES** or at locations other than the Harrisburg Field Office will not necessarily be considered in the final rulemaking or included in the Administrative Record.

Public Hearing

Persons wishing to comment at the public hearing should contact the person listed under **FOR FURTHER INFORMATION CONTACT** by 4 p.m. on September 2, 1992. If no one requests an opportunity to comment at a public hearing, the hearing will not be held.

Filing of a written statement at the time of the hearing is requested as it will greatly assist the transcriber. Submission of written statements in advance of the hearing will allow OSM officials to prepare adequate responses and appropriate questions. The public hearing will continue on the specified date until all persons scheduled to comment have been heard. Persons in the audience who have not been scheduled to comment, and who wish to do so, will be heard following those scheduled. The hearing will end after all persons scheduled to comment and persons present in the audience who wish to comment have been heard.

Public Meeting

If only one person requests an opportunity to comment at a hearing, a public meeting, rather than a public hearing, may be held. Persons wishing to meet with OSM representatives to discuss the proposed amendments may request a meeting at the Harrisburg Field Office by contacting the person listed under **FOR FURTHER INFORMATION CONTACT**. All such meetings will be open to the public and, if possible, notices of meetings will be posted at the locations listed under **ADDRESSES**. A written summary of each meeting will be made part of the Administrative Record.

Executive Order No. 12291 and the Regulatory Flexibility Act

On July 12, 1984, the Office of Management and Budget (OMB) granted OSM an exemption from sections 3, 4, 7, and 8 of Executive Order 12291 for actions related to approval or conditional approval of State regulatory programs. Therefore, preparation of a regulatory impact analysis and OMB regulatory review is not required.

The Department of the Interior has determined that this rule will not have a significant economic impact on a substantial number of small entities under the Regulatory Flexibility Act (5 U.S.C. 601 *et seq.*). The State submittal which is the subject of this rule is based upon counterpart Federal regulations for which an economic analysis was prepared and certification made that such regulations would not have a significant economic effect upon a substantial number of small entities. Hence, this rule will ensure that existing requirements previously promulgated by OSM will be implemented by the State. In making the determination as to whether this rule would have a significant economic impact, the Department relied upon the data and assumption for the counterpart Federal regulations.

Executive Order 12778

The Department of the Interior has conducted the reviews required by section 2 of Executive Order 12778 and has determined that, to the extent allowed by law, this rule meets the applicable standards of subsections (a) and (b) of that section. However, these standards are not applicable to the actual language of State regulatory programs and program amendments since each such program is drafted and promulgated by a specific State, not by OSM. Under section 503 and 505 of SMCRA (30 U.S.C. 1253 and 1255) and 30 CFR 730.11, 732.15, and 732.17(h) (10), decisions on proposed State regulatory programs and program amendments submitted by the State must be based solely on a determination of whether the submittal is consistent with SMCRA and its implementing Federal regulations and whether the requirements of 30 CFR part 730, 731, and 732 have been met.

Paperwork Reduction Act

This rule does not contain information collection requirements which require approval by the Office of Management and Budget under the Paperwork Reduction Act 44 U.S.C. 3507 *et seq.*

List of Subjects in 30 CFR Part 920

Intergovernmental relations, Surface mining, Underground mining.

Dated: July 10, 1992.

Jeffrey D. Jarrett,
Acting Assistant Director, Eastern Support Center.

[FR Doc. 92-19573 Filed 8-17-92; 8:45 am]
BILLING CODE 4310-05-M

---

30 CFR Part 920

Maryland Permanent Regulatory Program; Definitions

AGENCY: Office of Surface Mining Reclamation and Enforcement (OSM), Interior.

ACTION: Proposed rule.

SUMMARY: OSM is announcing receipt and requesting comments on a proposed amendment to the Maryland permanent regulatory program (hereinafter referred to as the Maryland program) under the Surface Mining Control and Reclamation Act of 1977 (SMCRA). The amendment revises the definition of the term, "operator."

This notice sets forth the times and locations that the Maryland program and the proposed amendment to that program are available for public inspection, the comment period during which interested persons may submit written comments on the amendment and the procedures that will be followed regarding the public hearing, if one is requested.

DATES: Written comments must be received on or before September 17, 1992 to ensure consideration in the rulemaking process. If requested, a public hearing on the amendment will

be held on September 14, 1992. Requests to present oral testimony at the hearing must be received on or before September 2, 1992.

ADDRESSES: Written comments and requests to testify at the hearing should be mailed or hand delivered to Robert J. Biggi, Director, Harrisburg Field Office at the address listed below. Copies of the Maryland program, the proposed amendment, and all written comments received in response to this notice will be available for public review at the addresses listed below during normal business hours, Monday through Friday, excluding holidays.

Each requestor may receive, free of charge, one copy of the proposed amendment by contacting OSM's Harrisburg Field Office.

Office of Surface Mining Reclamation and Enforcement, Harrisburg Field Office, Harrisburg Transportation Center, Third Floor, Suite 3C, 4th and Market Streets, Harrisburg, Pennsylvania, 17101, Telephone: (717) 782–4036.

Maryland Bureau of Mines, 69 Hill Street, Frostburg, Maryland 21532, Telephone (301)–689–4136.

A public hearing, if held, will be at the Penn Harris Motor Inn and Convention Center at the Camp Hill Bypass and U.S. Routes 11 and 15, Camp Hill, Pennsylvania, or at some other location in the area of interested parties.

FOR FURTHER INFORMATION CONTACT: Robert J. Biggi, Director, Harrisburg Field Office, (717) 782–4036.

SUPPLEMENTARY INFORMATION:

I. Background on the Maryland Program

The Secretary of the Interior approved the Maryland program on February 18, 1982. Information on the background of the Maryland program including the Secretary's findings, the disposition of comments and a detailed explanation of the conditions of approval of the Maryland program can be found in the February 18, 1992, **Federal Register** (47 FR 7214–7217). Subsequent actions concerning amendments to the Maryland program are in 30 CFR 920.15 and 30 CFR 920.16.

II. Discussion of Amendment

The Maryland Bureau of Mines submitted a program amendment to OSM on June 11, 1992. The amendment (Administrative Record Number MD–554.00) is a copy of the Maryland General Assembly's Senate Bill Number 114. The bill that is now referenced as Chapter 76 of the 1992 laws of Maryland revises the definition of the term "operator" in sections 7–101(k), 7–510(o) and 7–5A–01(h), Natural Resources Article, Annotated Code of Maryland. As revised, the definition of operator means any person, partnership, or corporation who removes or intends to remove more than 250 tons of coal from the earth by surface coal mining or deep coal mining within 12 consecutive calendar months in any one location. Chapter 76, signed by the Governor on May 5, 1992, is effective October 1, 1992.

III. Public Comment Procedures

In accordance with the provisions of 30 CFR 732.17(h), OSM is now seeking comments on whether the amendments proposed by Maryland satisfy the applicable program approval criteria of 30 CFR 732.15. If the amendments are deemed adequate, they will become part of the Maryland program.

Written Comments

Written comments should be specific, pertain only to the issues proposed in this rulemaking, and include explanations in support of the commenter's recommendations. Comments received after the time indicated under "DATES" or at locations other than the Harrisburg Field Office will not necessarily be considered in the final rulemaking or included in the Administrative Record.

Public Hearing

Persons wishing to comment at the public hearing should contact the person listed under "FOR FURTHER INFORMATION CONTACT" by 4 p.m. on September 2, 1992. If no one requests an opportunity to comment at a public hearing, the hearing will not be held.

Filing of a written statement at the time of the hearing is requested as it will greatly assist the transcriber. Submission of written statements in advance of the hearing will allow OSM officials to prepare adequate responses and appropriate questions. The public hearing will continue on the specified date until all persons scheduled to comment have been heard. Persons in the audience who have not been scheduled to comment, and who wish to do so, will be heard following those scheduled. The hearing will end after all persons scheduled to comment and persons present in the audience who wish to comment have been heard.

Public Meeting

If only one person requests an opportunity to comment at a hearing, a public meeting, rather than a public hearing, may be held. Persons wishing to meet with OSM representatives to discuss the proposed amendments may request a meeting at the Harrisburg Field Office by contacting the person listed under "FOR FURTHER INFORMATION CONTACT." All such meetings will be open to the public and, if possible, notices of meetings will be posted at the locations listed under "ADDRESSES." A written summary of each meeting will be made part of the Administrative Record.

Executive Order No. 12291 and the Regulatory Flexibility Act

On July 12, 1984, the Office of Management and Budget (OMB) granted OSM an exemption from section 3, 4, 7, and 8 of Executive Order 12291 for actions related to approval or conditional approval of State regulatory programs. Therefore, preparation of a regulatory impact analysis and OMB regulatory review is not required.

The Department of the Interior has determined that this rule will not have a significant economic impact on a substantial number of small entities under the Regulatory Flexibility Act (5 U.S.C. 601 *et seq.*). The State submittal which is the subject of this rule is based upon counterpart Federal regulations for which an economic analysis was prepared and certification made that such regulations would not have a significant economic effect upon a substantial number of small entities. Hence, this rule will ensure that existing requirements previously promulgated by OSM will be implemented by the State. In making the determination as to whether this rule would have a significant economic impact, the Department relied upon the data and assumption for the counterpart Federal regulations.

Executive Order 12778

The Department of the Interior has conducted the reviews required by section 2 of Executive Order 12778 and has determined that, to the extent allowed by law, this rule meets the applicable standards of subsections (a) and (b) of that section. However, these standards are not applicable to the actual language of State regulatory programs and program amendments since each such program is drafted and promulgated by a specific State, not by OSM. Under section 503 and 505 of SMCRA (30 U.S.C. 1253 and 1255) and 30 CFR 730.11, 732.15, and 732.17(h) (10), decisions on proposed State regulatory programs and program amendments submitted by the State must be based solely on a determination of whether the submittal is consistent with SMCRA and its implementing Federal regulations and whether the requirements of 30 CFR part 730, 731, and 732 have been met.

Paperwork Reduction Act

This rule does not contain information collection requirements which require approval by the Office of Management and Budget under the Paperwork Reduction Act 44 U.S.C. 3507 *et seq.*

List of Subjects in 30 CFR Part 920

Intergovernmental relations, Surface mining, Underground mining.

Dated: July 10, 1992.

Jeffrey D. Jarrett,

Acting Assistant Director, Eastern Support Center.

[FR Doc. 92-19571 Filed 8-17-92; 8:45 am]

BILLING CODE 4310-05-M

---

30 CFR Part 935

Ohio Permanent Regulatory Program; Evaluation of Revegetation Success

AGENCY: Office of Surface Mining Reclamation and Enforcement (OSM), Interior.

ACTION: Proposed rule; reopening of public comment period.

SUMMARY: OSM is reopening the public comment period on Revised Program Amendment No. 25 to the Ohio permanent regulatory program (hereinafter referred to as the Ohio program) under the Surface Mining Control and Reclamation Act of 1977 (SMCRA). Ohio has submitted one rule change and additional Administrative Record information describing the statistically valid sampling method which Ohio proposes to use to evaluate revegetation success. Ohio also discusses the statistical validity of a 100-percent sample and discusses training for Ohio's staff in the use of Ohio's proposed sampling method. Ohio's submission is intended to demonstrate that the Ohio program will be as effective as the corresponding Federal regulations regarding revegetation success.

This notice sets forth the times and locations that the Ohio program and proposed amendments to that program will be available for public inspection, the comment period during which interested persons may submit written comments on the proposed amendments, and the procedures that will be followed regarding the public hearing, if one is requested.

DATES: Written comments must be received on or before 4 p.m. on September 17, 1992. If requested, a public hearing on the proposed amendments will be held at 1 p.m. on September 14, 1992. Requests to present oral testimony at the hearing must be received on or before 4 p.m. on September 2, 1992.

ADDRESSES: Written comments and requests to testify at the hearing should be mailed or hand-delivered to Mr. Richard J. Seibel, Director, Columbus Field Office, at the address listed below. Copies of the Ohio program, the proposed amendments, and all written comments received in response to this notice will be available for public review at the addresses listed below during normal business hours, Monday through Friday, excluding holidays.

Each requester may receive, free of charge, one copy of the proposed amendments by contacting OSM's Columbus Field Office.

Office of Surface Mining Reclamation and Enforcement, Columbus Field Office, 2242 South Hamilton Road, room 202, Columbus, Ohio 43232, Telephone: (614) 866-0578.

Ohio Department of Natural Resources, Division of Reclamation, 1855 Fountain Square Court, Building H-3, Columbus, Ohio 43224, Telephone: (614) 265-6675.

FOR FURTHER INFORMATION CONTACT: Mr. Richard J. Seibel, Director, Columbus Field Office, (614) 866-0578.

SUPPLEMENTARY INFORMATION:

I. Background

On August 16, 1982, the Secretary of the Interior conditionally approved the Ohio program. Information on the general background of the Ohio program submission, including the Secretary's findings, the disposition of comments, and a detailed explanation of the conditions of approval of the Ohio program, can be found in the August 10, 1982, **Federal Register** (47 FR 34688). Subsequent actions concerning the conditions of approval and program amendments are identified at 30 CFR 935.11, 935.12, 935.15, and 935.16.

II. Discussion of the Proposed Amendments

On December 15, 1989 (54 FR 51397), the Director of OSM announced his decision on Ohio's initial submission of Revised Program Amendment No. 25. In that decision, the Director found that Ohio had not demonstrated that its method of evaluating the success of revegetation is no less effective than the Federal rules at 30 CFR 816.116(a). The Director therefore continued the requirement at 30 CFR 935.16(f) that Ohio amend its program to include a statistically valid technique to evaluate revegetation success and provided additional time for Ohio to amend its program.

By letter dated December 12, 1989 (Administrative Record No. OH-1245), Ohio proposed a continuation of Revised Program Amendment Number 25. In this continuation, Ohio proposed to revise section 1501:13-9-15 of the Ohio Administrative Code (OAC) to include a statistically valid method of evaluating revegetation success in order to satisfy the OSM requirement at 30 CFR 935.16(f).

On January 8, 1990, OSM published a notice in the **Federal Register** (55 FR 649) announcing receipt of Ohio's proposed continuation of Revised Program Amendment No. 25 and inviting public comment on its adequacy. The public comment period ended on February 7, 1990. The public hearing scheduled for February 2, 1990, was not held because no one requested an opportunity to testify.

By letter dated March 23, 1990 (Administrative Record No. OH-1292), OSM notified Ohio that the proposed revisions to OAC section 1501:13-9-15 were less effective than the Federal regulations at 30 CFR 816.116(a) because Ohio proposed to use statistically valid sampling methods only on "questionable" areas.

By letter dated July 24, 1990 (Ohio Administrative Record No. OH-1343), Ohio submitted further proposed revisions to OAC section 1501:13-9-15 which were intended to respond to OSM's comments of March 23, 1990. Ohio proposed to revise paragraph (I)(1) to specify that success of revegetation shall be measured by using a statistically valid sampling technique with a ninety per cent statistical confidence interval (i.e. one-sided test with 0.10 alpha error). Ohio also proposed to revise paragraph (i)(3)(c)(iv) to delete the requirement that, for Phase III bond release, species planted must meet the standard that no single area with less than thirty percent cover shall exceed the lesser of three thousand square feet or 0.3 percent of the land affected.

On August 10, 1990, OSM published a notice in the **Federal Register** (55 FR 32643) announcing receipt of Ohio's further revisions to the continuation of Revised Program Amendment No. 25 and inviting public comment on its adequacy. The public comment period ended on September 10, 1990. The public hearing scheduled for September 4, 1990, was not held because no one requested an opportunity to testify.

By letter dated October 24, 1990 (Administrative Record No. OH-1398), OSM provided Ohio with its questions and comments about the additional revisions submitted on July 24, 1990. OSM requested that Ohio provide the details of Ohio's statistically valid sampling method for OSM's review and

approval. OSM also requested that Ohio provide a justification for the proposed deletion of the vegetation standard limiting the size of areas with less than thirty percent vegetative cover.

By letter dated March 1, 1991 (Administrative Record No. OH–1471), Ohio submitted administrative record information in support of the revisions proposed on July 24, 1990, and intended to respond to OSM's comments of October 24, 1990. This administrative record information provided the details of Ohio's proposed statistically valid method of sampling revegetation success and was intended to justify the deletion of the standard for areas with less than thirty percent vegetative cover.

By letter dated March 21, 1991 (Administrative Record No. OH–1489), Ohio withdrew its March 1, 1991, submission of Administrative Record information. Ohio also withdrew the revisions to Ohio Administrative Code section 1501:13–9–15 paragraphs (I)(1) and (I)(3)(c)(iv) which the State proposed on July 24, 1990. OSM announced Ohio's withdrawal of the July 24, 1990, and March 1, 1991, amendment submissions in the **Federal Register** on May 7, 1991 (56 FR 21113).

By letter dated June 19, 1991, Ohio submitted an informal version of Revised Program Amendment Number 25 for preliminary review by OSM. This informal submission proposed that Ohio will use two visual estimates of revegetation success followed by statistical verification of those visual estimates. In this informal submission, Ohio proposed to retain the revegetation standard limiting the size of areas with less than thirty percent vegetative cover.

By letter dated August 9, 1991 (Administrative Record No. OH–1556), Ohio withdrew the informal submission of June 18, 1991, and resubmitted a formal version of Revised Program Amendment Number 25. In this formal amendment submission, Ohio proposed revisions to Ohio administrative Code (OAC) section 1501:13–9–15 to delete the revegetation standard at paragraph (I)(3)(c)(i)(d) limiting the size of areas with less than thirty percent vegetative cover and to add new paragraph (I)(3)(C)(ii) stating that "Success of the ground-cover [for phase III bond release shall be measured using a statistically valid sampling technique with a ninety per cent statistical confidence interval (i.e. one-sided test with 0.10 alpha error."

As part of its August 9, 1991, resubmission, Ohio also reinstated the March 1, 1991, Administrative Record information which provided the details of Ohio's proposed statistically valid sampling method modeled on the Rennie-Farmer Stick Method. The March 1, 1991, Administrative Record information also proposed justification to support Ohio's proposed deletion of its vegetation standard limiting the size of areas with less than thirty percent vegetative cover.

On August 27, 1991, OSM published a notice in the **Federal Register** (56 FR 42299) announcing receipt of Ohio's August 9, 1991, submission of Revised Program Amendment No. 25 and inviting public comment on its adequacy. The public comment period ended on September 26, 1991. The public hearing scheduled for September 23, 1991, was not held because no one requested an opportunity to testify.

By letter dated January 3, 1992 (Administrative Record No. OH–1623), OSM provided Ohio with its questions and comments about the August 9, 1991, submission of the amendment. OSM requested that Ohio provide the details of Ohio's procedure for statistical analysis of the sampling results. OSM also requested that Ohio provide a justification that Ohio's proposed standard of 70 percent ground cover is comparable to unmined sites in the Ohio mining area. Finally, OSM requested that Ohio further revise the rule to require statistically valid sampling for ground cover, production, and stocking.

By letter dated February 10, 1992 (Administrative Record No. OH–1647), Ohio requested a meeting between Ohio, OSM, and Ohio Agricultural Research and Development Center (OARDC) personnel to clarify the issues and concerns expressed in OSM's January 3, 1992, letter. On March 31, 1992, representatives of Ohio, OSM, and the OARDC met at OARDC to discuss those issues (Administrative Record OH–1683).

By letter dated June 22, 1992 (Administrative Record No. OH– 1725), Ohio submitted a new version of Revised Program Amendment Number 25 and withdrew its August 9, 1991, submission. The new submission is intended to address the issues in OSM's January 3, 1992, letter. The June 22, 1992, submission proposes to revise OAC 1501:13–9–05 paragraph (J)(1) to incorporate additional language previously proposed in Ohio's July 24, 1990, submission of paragraph (I)(1) and in Ohio's August 9, 1991, submission of paragraph (I)(3)(c)(ii). In its June 22, 1992, submission, Ohio is proposing to add the following sentence at the end of OAC 1501:13–9–05 paragraph (J)(1):

Success of revegetation shall be measured using a statistically valid sampling technique with a ninety percent statistical confidence interval (i.e. one-sided test with 0.10 alpha error).

Accompanying this proposed rule change, Ohio has submitted four Administrative Record documents. These documents discuss the statistical validity of a 100-percent census of a population, provide the details of the visual method of ground cover evaluation which Ohio proposes to use on 100 percent of proposed bond release areas, and discuss the methods by which Ohio will train and refresh the training of its inspectors in the use of the visual method of estimating revegetation success.

In the June 22, 1992, resubmission of Revised Program Amendment Number 25, Ohio is retaining the single barren area ground cover standard which restricts areas with less than thirty percent vegetative cover.

III. Public Comment Procedures

In accordance with the provisions of 30 CFR 732.17(h), OSM is now seeking comment on whether the amendments proposed by Ohio satisfy the applicable program approval criteria of 30 CFR 732.15. If the amendments are deemed adequate, they will become part of the Ohio program.

Written Comments

Written comments should be specific, pertain only to the issues proposed in this rulemaking, and include explanations in support of the commenter's recommendations. Comments received after the time indicated under "DATES" or at locations other than the Columbus Field Office will not necessarily be considered in the final rulemaking or included in the Administrative Record.

Public Hearing

Persons wishing to comment at the public hearing should contact the person listed under "**FOR FURTHER INFORMATION CONTACT**" by 4 p.m. on September 2, 1992. If no one requests an opportunity to comment at a public hearing, the hearing will not be held.

Filing a written statement at the time of the hearing is requested as it will greatly assist the transcriber. Submission of written statements in advance of the hearing will allow OSM officials to prepare adequate responses and appropriate questions.

The public hearing will continue on the specified date until all persons scheduled to comment have been heard. Persons in the audience who have not been scheduled to comment and who wish to do so will be heard following those scheduled. The hearing will end after all persons scheduled to comment

and persons present in the audience who wish to comment have been heard.

Public Meeting

If only one person requests an opportunity to comment at a hearing, a public meeting, rather than a public hearing, may be held. Persons wishing to meet with OSM representatives to discuss the proposed amendments may request a meeting at the Columbus Field Office by contacting the person listed under "**FOR FURTHER INFORMATION CONTACT.**" All such meetings shall be open to the public and, if possible, notices of the meetings will be posted at the locations listed under "**ADDRESSES.**" A written summary of each public meeting will be made a part of the Administrative Record.

Executive Order No. 12291 and the Regulatory Flexibility Act

On July 12, 1984, the Office of Management and Budget (OMB) granted OSM an exemption from sections 3, 4, 7, and 8 of Executive Order 12291 for actions related to approval or conditional approval of State regulatory programs. Therefore, preparation of a regulatory impact analysis and OMB regulatory review is not required.

The Department of the Interior has determined that this rule will not have a significant economic impact on a substantial number of small entities under the Regulatory Flexibility Act (5 U.S.C. 601 *et seq.*). The State submittal which is the subject of this rule is based upon counterpart Federal regulations for which an economic analysis was prepared and certification made that such regulations would not have a significant economic effect upon a substantial number of small entities. Hence, this rule will ensure that existing requirements previously promulgated by OSM will be implemented by the State. In making the determination as to whether this rule would have a significant economic impact, the Department relied upon the data and assumption for the counterpart Federal regulations.

Executive Order 12778

The Department of the Interior has conducted the reviews required by section 2 of Executive Order 12778 and has determined that, to the extent allowed by law, this rule meets the applicable standards of subsections (a) and (b) of that section. However, these standards are not applicable to the actual language of State regulatory programs and program amendments since each such program is drafted and promulgated by a specific State, not by OSM. Under sections 503 and 505 of SMCRA (30 U.S.C. 1253 and 1255) and 30 CFR 730.11, 732.15, and 732.17(h)(10), decisions on proposed State regulatory programs and program amendments submitted by the State must be based solely on a determination of whether the submittal is consistent with SMCRA and its implementing Federal regulations and whether the requirements of 30 CFR part 730, 731, and 732 have been met.

Paperwork Reduction Act

This rule does not contain information collection requirements which require approval by the Office of Management and Budget under the Paperwork Reduction Act 44 U.S.C. 3507 *et seq.*

List of Subjects in 30 CFR Part 935

Intergovernmental relations, Surface mining, Underground mining.

Dated: July 10, 1992.

Jeffrey D. Jarrett,

Acting Assistant Director, Eastern Support Center.

[FR Doc. 92-19572 Filed 8-17-92; 8:45 am]

BILLING CODE 4310-05-M

---

30 CFR Part 935

Ohio Permanent Regulatory Program; Revision of Administrative Rule

AGENCY: Office of Surface Mining Reclamation and Enforcement (OSM), Interior.

ACTION: Proposed rule.

SUMMARY: OSM is announcing the receipt of proposed Program Amendment Number 59 to the Ohio permanent regulatory program (hereinafter referred to as the Ohio program) under the Surface Mining Control and Reclamation Act of 1977 (SMCRA). The amendment is intended to make the Ohio program as effective as the corresponding Federal regulations. The amendment concerns the permitting of coal preparation plants or support facilities operated in connection with a coal mine but not located within the permit area for a specific mine.

This document sets forth the times and locations that the Ohio program and proposed amendments to that program will be available for public inspection, the comment period during which interested persons may submit written comments on the proposed amendments, and the procedures that will be followed regarding the public hearing, if one is requested.

DATES: Written comments must be received on or before 4 p.m. on September 17, 1992. If requested, a public hearing on the proposed amendments will be held at 1 p.m. on September 14, 1992. Requests to present oral testimony at the hearing must be received on or before 4 p.m. on September 2, 1992.

ADDRESSES: Written comments and requests to testify at the hearing should be mailed or hand-delivered to Mr. Richard J. Seibel, Director, Columbus Field Office, at the address listed below. Copies of the Ohio program, the proposed amendments, and all written comments received in response to this notice will be available for public review at the addresses listed below during normal business hours, Monday through Friday, excluding holidays. Each requester may receive, free of charge, one copy of the proposed amendments by contacting OSM's Columbus Field Office:

Office of Surface Mining Reclamation and Enforcement, Columbus Field Office, 2242 South Hamilton Road, room 202, Columbus, Ohio 43232, Telephone: (614) 866-0578.

Ohio Department of Natural Resources, Division of Reclamation, 1855 Fountain Square Court, Building H-3, Columbus, Ohio 43224, Telephone: (614) 265-6675.

FOR FURTHER INFORMATION CONTACT: Mr. Richard J. Seibel, Director, Columbus Field Office, (614) 866-0578.

SUPPLEMENTARY INFORMATION:

I. Background

On August 16, 1982, the Secretary of the Interior conditionally approved the Ohio program. Information on the general background of the Ohio program submission, including the Secretary's findings, the disposition of comments, and a detailed explanation of the conditions of approval of the Ohio program, can be found in the August 10, 1982, **Federal Register** (47 FR 34688). Subsequent actions concerning the conditions of approval and program amendments are identified at 30 CFR 935.11, 935.12, 935.15, and 935.16.

II. Discussion of the Proposed Amendments

By letter dated June 30, 1992 (Administrative Record No. OH-1730), Ohio submitted proposed Program Amendment No. 59. This amendment proposes to add the phrase "in connection with a coal mine but" to paragraph (A) of Ohio Administrative Code (OAC) section 1501:13-13-06. Revised paragraph (A) would read:

(A) Applicability. Each person who operates a coal preparation plant or support facility *in connection with a coal mine* but not located within the

permit area for a specific mine shall obtain a permit in accordance with paragraph (I) of rule 1501:13–4–12 of the Administrative Code, obtain a bond in accordance with these rules and operate the plant or support facility in accordance with these rules (emphasis added).

III. Public Comment Procedures

In accordance with the provisions of 30 CFR 732.17(h), OSM is now seeking comment on whether the amendments proposed by Ohio satisfy the applicable program approval criteria of 30 CFR 732.15. If the amendments are deemed adequate, they will become part of the Ohio program.

Written Comments

Written comments should be specific, pertain only to the issues proposed in this rulemaking, and include explanations in support of the commenter's recommendations. Comments received after the time indicated under "DATES" or at locations other than the Columbus Field Office will not necessarily be considered in the final rulemaking or included in the Administrative Record.

Public Hearing

Persons wishing to comment at the public hearing should contact the person listed under **FOR FURTHER INFORMATION CONTACT** by 4 p.m. on September 2, 1992. If no one requests an opportunity to comment at a public hearing, the hearing will not be held.

Filing of a written statement at the time of the hearing is requested as it will greatly assist the transcriber. Submission of written statements in advance of the hearing will allow OSM officials to prepare adequate responses and appropriate questions.

The public hearing will continue on the specified date until all persons scheduled to comment have been heard. Persons in the audience who have not been scheduled to comment and who wish to do so will be heard following those scheduled. The hearing will end after all persons scheduled to comment and persons present in the audience who wish to comment have been heard.

Public Meeting

If only one person requests an opportunity to comment at a hearing, a public meeting, rather than a public hearing, may be held. Persons wishing to meet with OSM representatives to discuss the proposed amendments may request a meeting at the Columbus Field Office by contacting the person listed under **FOR FURTHER INFORMATION CONTACT**." All such meetings shall be open to the public and, if possible, notices of the meetings will be posted at the locations listed under "**ADDRESSES**." A written summary of each public meeting will be made a part of the Administrative Record.

Executive Order No. 12291 and the Regulatory Flexibility Act

On July 12, 1984, the Office of Management and Budget (OMB) granted OSM an exemption from sections 3, 4, 7, and 8 of Executive Order 12291 for actions related to approval or conditional approval of State regulatory programs. Therefore, preparation of a regulatory impact analysis and OMB regulatory review is not required.

The Department of the Interior has determined that this rule will not have a significant economic impact on a substantial number of small entities under the Regulatory Flexibility Act (5 U.S.C. 601 *et seq.*). The State submittal which is the subject of this rule is based upon counterpart Federal regulations for which an economic analysis was prepared and certification made that such regulations would not have a significant economic effect upon a substantial number of small entities. Hence, this rule will ensure that existing requirements previously promulgated by OSM will be implemented by the State. In making the determination as to whether this rule would have a significant economic impact, the Department relied upon the data and assumption for the counterpart Federal regulations.

Executive Order 12778

The Department of the Interior has conducted the reviews required by section 2 of the Executive Order 12778 and has determined that, to the extent allowed by law, this rule meets the applicable standards of subsections (a) and (b) of that section. However, these standards are not applicable to the actual language of State regulatory programs and program amendments since each such program is drafted and promulgated by a specific State, not by OSM. Under section 503 and 505 of SMCRA (30 U.S.C. 1253 and 1255) and 30 CFR 730.11, 732.15, and 732.17(h)(10), decisions on proposed State regulatory programs and program amendments submitted by the State must be based solely on a determination of whether the submittal is consistent with SMCRA and its implementing Federal regulations and whether the requirements of 30 CFR part 730, 731, and 732 have been met.

Paperwork Reduction Act

This rule does not contain information collection requirements which require approval by the Office of Management and Budget under the Paperwork Reduction Act 44 U.S.C. 3507 *et seq.*

List of Subjects in 30 CFR Part 935

Intergovernmental relations, Surface mining, Underground mining.

Dated: July 10, 1992.

Jeffrey D. Jarrett,

Acting Assistant Director, Eastern Support Center.

[FR Doc. 92–19574 Filed 8–17–92; 8:45 am]

BILLING CODE 4310–05–M

DEPARTMENT OF THE TREASURY

Fiscal Service

31 CFR Part 257

RIN Number—1510–AA26

Payment on Account of Deposits in the Postal Savings System

AGENCY: Financial Management Service, Fiscal Service, Treasury.

ACTION: Notice of proposed rulemaking.

SUMMARY: This document proposes to remove the regulation governing payment on account of deposits in the Postal Savings System. This regulation is obsolete. Application for payment are precluded by the Postal Savings System Statute of Limitations Act of 1984 (Pub. L. 98–359). The effect of this notice is to remove an unnecessary regulation.

DATES: Comments must be submitted on or before September 17, 1992.

ADDRESSES: Comments should be sent to Director, Funds Management Division, Financial Management Service, Washington, DC 20227.

FOR FURTHER INFORMATION CONTACT: Mia Abeya on (202) 874–8740.

SUPPLEMENTARY INFORMATION: In 1966, the Postmaster General was directed to transfer unpaid Postal Savings System deposits to the Treasury Department. Public Law 89–377, 80 Stat. 92 (March 28, 1966). The Treasury Department promulgated this regulation in 1968 to instruct claimants on how to file a claim for Postal Savings System deposits. In 1984, the Postal Savings System Statute of Limitations Act, Public Law 98–359, 98 Stat. 402, established July 18, 1985, as the final date upon which a claim for a Postal Savings System deposit could be filed. Therefore, this regulation is no longer necessary.

It has been determined that this document is not a major regulation as defined in E.O. 12291 and a regulatory impact analysis is not required. The removal of this unused regulation will

have little or no effect on the economy or consumers. It is hereby certified that removal of this regulation will not have a significant economic impact on a substantial number of small entities. Accordingly, a regulatory flexibility analysis is not required. The removal of this unused regulation will have little or no effect on small entities.

List of Subjects in 31 CFR Part 257

Claims, Investments.

For the reasons set out in the preamble, 31 CFR Part 257 is proposed to be removed as follows:

PART 257—[REMOVED]

Part 257 is removed.

Russell D. Morris,

Commissioner.

[FR Doc. 92-19564 Filed 8-17-92; 8:45 am]

BILLING CODE 4810-35-M

NUCLEAR REGULATORY COMMISSION

48 CFR Chapter 20

RIN 3150-AE34

Acquisition Regulation (NRCAR); Organizational Conflicts of Interest

AGENCY: Nuclear Regulatory Commission.

ACTION: Proposed rule.

SUMMARY: The Nuclear Regulatory Commission (NRC) is proposing an amendment to its proposed Nuclear Regulatory Commission Acquisition Regulation (NRCAR) concerning organizational conflicts of interest. The proposed NRCAR, published for public comment on October 2, 1989 (54 FR 40420), addresses a full range of agency acquisition matters. A portion of the proposed NRCAR, relating to debarment, suspension and ineligibility procedures, has been adopted as a final agency regulation (57 FR 29220; July 1, 1992). The remainder of the proposed NRCAR is in preparation for publication as a final rule. One aspect of the NRCAR relates to the agency's organizational conflicts of interest rules. The amendment proposed by this notice modifies a section of the conflicts of interest rules relating to work for others during the period work is being performed for NRC. If the NRCAR is issued as a final rule before the Commission decides on the amendment proposed by this notice, the proposed amendment will be considered for amendment of the NRCAR. Otherwise, the proposed amendment will be considered for incorporation into the NRCAR when published as a final rule.

DATES: The comment period expires September 17, 1992. Comments received after this date will be considered if it is practical to do so, but assurance of consideration cannot be given except as to comments received on or before this date.

ADDRESSES: Submit written comments to: The Secretary of the Commission; U.S. Nuclear Regulatory Commission; Attention: Docketing and Service Branch, Washingon, DC 20555. Copies of comments received may be examined or obtained for a fee at the NRC Public Document Room, 2120 L Street, NW. (Lower Level), Washington, DC (telephone (202) 634-3273).

FOR FURTHER INFORMATION CONTACT: Edward L. Halman, Director, Division of Contracts and Property Management, Nuclear Regulatory Commission, Washington, DC 20555. Telephone: (301) 492-4347.

SUPPLEMENTARY INFORMATION:

Background

On August 15, 1991, the Commission approved a revision to its proposed NRCAR published October 2, 1989 (54 FR 40420) concerning organizational conflicts of interest (COI). The thrust of this revision limited COI restrictions to the relatively narrow scope and shorter duration of individual task orders rather than to the entire scope and term of the basic contract. While the NRC staff believed that the revised policy would increase competition for NRC technical assistance and research work, additional restrictions were added to (a) avoid the potential for unfair competitive advantage that could result if NRC contractors were permitted to market their services while working for NRC at a licensee site, and (b) ensure that NRC contractors do not have divided financial interests while working at a licensee site.

Two of NRC's major technical assistance and research contractors commented that the COI provision, approved on August 15, 1991, was overly restrictive and would impede rather than enhance NRC's ability to increase competition in the technical assistance marketplace. Therefore, the NRC held a public meeting on March 26, 1992, in order that all interested parties could provide further comments on the proposed revision of the Commission's COI regulation or provide alternatives that would achieve an equivalent level of COI protection (57 FR 4652; February 6, 1992).

Statement of Considerations

The nature of the comments received in connection with the March 26, 1992, meeting varied with respect to how the commenters viewed the restrictiveness of the policy. While a number of commenters found the existing COI language adequate, others stated the policy was overly restrictive and lacking in flexibility.

The Commission has considered the comments concerning the substantial restrictions against performing any work at an NRC licensee site where the contractor performs on-site work for NRC, coupled with the lack of flexibility in applying this restriction, and agrees that exceptions to the blanket restriction may be permitted in appropriate cases. Thus, the Commission has modified the restriction to authorize the NRC contractor to perform work for NRC licensees at the site of work performed for NRC if:

(a) The work is not the same technical area as the work performed for NRC; and

(b) The contracting officer determines that the specific situation will not pose a potential for technical bias or unfair competitive advantage.

In making the determination, the contracting officer will consider factors such as: The relative value of the work for NRC; whether there has been an on-going contractual or financial relationship between the NRC contractor and the NRC licensee that predates the NRC contract; whether the NRC contractor gained information about the availability of work for the NRC licensee as a result of contractor access to the site under the NRC contract; the relative amount of time spent at the site by the NRC contractor's personnel; whether the work for NRC at the site is specific or is a part of a generic task or contract; and any other factors that may indicate financial ties or competitive advantage.

Another section of this clause on which the Commission received objections related to the requirement to disclose all other work proposed to be done by the contractor for others that may give rise to a COI situation. The specific objection related to the requirement that the NRC be informed of the work at least 15 days in advance of undertaking the work. Some companies complained that it is difficult for diversified firms to ensure that the division performing the work for NRC would be aware of the work by other divisions 15 days in advance in all cases. Giving due consideration to these comments, the Commission has

modified the provision to require that the contractor use due diligence to identify and obtain information about work for others that would fall within the scope of the NRC contract, and report the information to NRC 15 days in advance of undertaking the work. The Commission has also added a corresponding provision which indicates that the contracting officer may approve reporting not in accordance with this provision in cases where the contractor justifies the deviation on the grounds of urgency or by showing that despite the exercise of due diligence, the contractor's officials responsible for the NRC contract were not aware of the work for others falling within this provision.

Administrative Procedure Act

Section 553 of the Administrative Procedure Act (5 U.S.C. 551 et seq) exempts rules relating to public contracts from the prior notice and comment procedure normally required for rulemaking. However, the Office of Federal Procurement Policy (OFPP), Office of Management and Budget, has established procedures to be used by all Federal agencies in the promulgation of procurement regulations. The Commission published the proposed NRCAR, including proposed COI regulations, on October 2, 1989 (54 FR 40420). Nonetheless, this proposal provides a further opportunity for public comment on a proposed amendment to the conflict of interest provisions presented in the October 2, 1989, proposed rule.

Environmental Impact: Categorical Exclusion

The NRC has determined that this regulation is the type of action described in the categorical exclusion set forth in 10 CFR 51.22(c) (5) and (6). Therefore, neither an environmental impact statement nor an environmental assessment has been prepared for this proposed rule.

Paperwork Reduction Act Statement

This proposed rule amends information collection requirements that are subject to the Paperwork Reduction Act of 1980 (44 U.S.C. 3501 et seq.). This rule has been submitted to the Office of Management and Budget for review and approval of the paperwork requirements.

The public reporting burden for this collection of information is estimated to average one hour per response, including the time for reviewing instructions, searching existing data sources, gathering and maintaining the data needed, and completing and reviewing the collection of information. Send comments regarding this burden estimate or any other aspect of this collection of information, including suggestions for reducing this burden, to the Information and Records Management Branch (MNBB-7714), U.S. Nuclear Regulatory Commission, Washington, DC 20555, and to the Desk Officer, Office of Information and Regulatory Affairs, NEOB-3019, (3150-), Office of Management and Budget, Washington, DC 20503.

Regulatory Analysis

This proposed rule establishes the policy, procedures, and requirements necessary to comply with 42 U.S.C. 2221, section 170 A of the Atomic Energy Act of 1954, as amended, as it addresses COI. This provision will not have an additional adverse economic impact on any contractor or potential contractor because it merely implements the statute which governs COI in the award of NRC's contracts.

Regulatory Flexibility Certification

As required by the Regulatory Flexibility Act of 1980, 5 U.S.C. 605(b), the Commission certifies that this rule does not have a significant economic impact on a substantial number of small entities. The proposed rule establishes the agency's COI policy and procedures to comply with 42 U.S.C. 221, section 170 A of the Atomic Energy Act of 1954, as amended. Because the proposed rule establishes procedures applicable only in certain instances, these provisions do not have a significant economic impact on any contractor, including small entities.

Backfit Analysis

The NRC has determined that the backfit rule, 10 CFR 50.109, does not apply to this proposed rule. Therefore, a backfit analysis is not required because the rule does not involve any provision which would impose backfits as defined in 10 CFR 50.109(a)(1).

List of Subjects in 48 CFR Chapter 20

Government procurement, Nuclear Regulatory Commission Acquisition Regulations, Reporting and recordkeeping requirements.

For the reasons set out in the preamble and under the authority of the Atomic Energy Act of 1954, as amended, the Energy Reorganization Act of 1974, as amended, 5 U.S.C. 553, and FAR subpart 1.3, the NRC is proposing to adopt the following amendments to the provisions of paragraphs (c) and (d) of proposed section 2052.209-74, "Contractor organizational conflicts of interest", which was contained in the proposed rule published in the **Federal Register** on October 2, 1989 (54 FR 40420).

PART 2052—SOLICITATION PROVISIONS AND CONTRACT CLAUSES

1. The authority citation for part 2052, as proposed to be added at 54 FR 40436; October 2, 1989, continues to read as follows:

Authority: Sec. 161, 68 Stat. 948, as amended (42 U.S.C. 2201); Sec. 201, 88 Stat. 1242, as amended (42 U.S.C. 5841); Pub. L. 93-400, 88 Stat. 796, as amended by Pub. L. 96-83, 93 Stat. 648, Pub. L. 98-577, 98 Stat. 3074 (41 U.S.C. 401 et seq.).

2. Section 2052.209-74, as proposed to be added at 54 FR 40437; October 2, 1989, is proposed to be further amended by revising paragraphs (c) and (d) to read as follows:

2052.209-74 Contractor organizational conflicts of interest.

* * * * *

(c) *Work for others.* (1) Notwithstanding any other provision of this contract, during the term of this contract, the contractor agrees to forego entering into consulting or other contractual arrangements with any firm or organization, the result of which may give rise to a conflict of interest with respect to the work being performed under this contract. The contractor shall ensure that all employees under this contract abide by the provision of this clause. If the contractor has reason to believe, with respect to itself or any employee, that any proposed consultant or other contractual arrangement with any firm or organization may involve a potential conflict of interest, the contractor shall obtain the written approval of the contracting officer before the execution of such contractual arrangement.

(2) The contractor may not represent, assist, or otherwise support an NRC licensee or applicant undergoing an NRC audit, inspection, or review where the activities that are subject of the audit, inspection, or review are the same as or substantially similar to the services within the scope of this contract (or task order as appropriate), except where the NRC licensee or applicant requires the contractor's support to explain or defend the contractor's prior work for the utility or other entity which NRC questions.

(3) When the contractor performs work for the NRC under this contract at any NRC licensee or applicant site, the contractor shall neither solicit nor perform work in the same or similar

technical area for that licensee or applicant organization for a period commencing with the award of the task order or beginning of work on the site (if not a task order contract and ending one year after completion of all work under the associated task order, or last time at the site (if not a task order contract).

(4) When the contractor performs work for the NRC under this contract at any NRC licensee or applicant site,

(i) The contractor may not solicit work at that site for that licensee or applicant during the period of performance of the task order or the contract, as appropriate.

(ii) The contractor may not perform work at that site for that licensee or applicant during the period of performance of the task order or the contract, as appropriate, and for one year thereafter.

(iii) Notwithstanding the foregoing, the contracting officer may authorize the contractor to solicit or perform this type of work if the contracting officer determines that the situation will not pose a potential for technical bias or unfair competitive advantage.

(d) *Disclosure after award.* (1) The contractor warrants that to the best of its knowledge and belief, and except as otherwise set forth in this contract, it does not have any organizational conflicts of interest as defined in 48 CFR 2009.570–2.

(2) The contractor agrees that, if after award, it discovers organizational conflicts of interest with respect to this contract, it shall make an immediate and full disclosure in writing to the contracting officer. This statement must include a description of the action which the contractor has taken or proposes to take to avoid or mitigate such conflicts. The NRC may, however, terminate the contract if termination is in the best interest of the government.

(3) It is recognized that the scope of work of a task-order-type contract necessarily encompasses a broad spectrum of activities. Consequently, if this is a task-order-type contract, the contractor agrees that it will disclose all proposed new work involving NRC licensees or applicants which comes within the scope of work of the underlying contract. Further, if this contract involves work at a licensee or applicant site, the contractor agrees to exercise diligence to discover and disclose any new work at that licensee or applicant site. This disclosure must be made before the submission of a bid or proposal to the utility or other regulated entity and must be received by the NRC at least 15 days before the proposed award date in any event, unless a written justification demonstrating urgency and due diligence to discover and disclose is provided by the contractor and approved by the contracting officer. The disclosure must include the statement of work, the dollar value of the proposed contract, and any other documents that are needed to fully describe the proposed work for the regulated utility or other regulated entity. NRC may deny approval of the disclosed work only when the NRC has issued a task order which includes the technical area and, if site-specific, the site, or has plans to issue a task order which includes the technical area and, if site-specific, the site, or when the work violates paragraphs (c)(2), (c)(3) or (c)(4) of this section.

* * * * *

Dated at Bethesda, Maryland this 6th day of August, 1992.

For the Nuclear Regulatory Commission.

Patricia G. Norry,

Director, Office of Administration.

[FR Doc. 92–19627 Filed 8–17–92; 8:45 am]

BILLING CODE 7590-01-M

DEPARTMENT OF DEFENSE

Defense Logistics Agency

48 CFR Parts 5446 and 5452

DLA Acquisition Regulation; Statistical Process Control

AGENCY: Defense Logistics Agency, DOD.

ACTION: Withdrawal of proposed rule.

SUMMARY: The Defense Logistics Agency (DLA) is withdrawing the proposed Defense Logistics Agency acquisition regulation on the use of Statistical Process Control (SPC) in select DLA contracts. The proposed coverage would have established a new 48 CFR chapter 54 by adding prescriptive language and a contract clause at parts 5446 and 5452, respectively. The proposed rule was published for public comment in the **Federal Register** on December 20, 1991 (56 FR 66008). A correction to the proposed rule was published in the **Federal Register** on March 12, 1992 (57 FR 8740), and the comment period was reopened.

FOR FURTHER INFORMATION CONTACT: Ms. Ynette Shelkin, Defense Logistics Agency, DLA-PPR at (703) 274–6431.

SUPPLEMENTARY INFORMATION: In the past, DLA relied on end item inspection to assess the quality of the products it purchased. Now, however, emphasis is being placed on controlling quality in the early stages of product manufacture. SPC is a widely recognized techique that provides for continuous quality assessment and improvement by focusing on the manfacturing process rather than the end-product.

Neither the Federal Acquisition Regulation (FAR) nor the Defense FAR Supplement (DFARS) currently contains regulatory coverage on SPC. As a result, DLA proposed adding coverage on SPC to its DLAR 4105.1, which implements and supplements the FAR, the DFARS, and other DOD publications, and establishes DLA procedures relating to the acquisition of supplies and services. The supplementary coverage would have standardized the use of SPC as a quality control tool by the various supply centers in DLA. The coverage was designed to encourage the use of SPC at contractor facilities to ensure consistent production of conforming material. However, after careful consideration of the comments received and the current emphasis on minimizing the burden of Government regulation, the determination was made to withdraw the proposed rule.

List of Subjects in 48 CFR Parts 5446 and 5452

Government procurement.

By order of the Director.

Jack S. Carver,

Acting Chief, Publications Division, Office of Administration.

[FR Doc. 92–19550 Filed 8–17–92; 8:45 am]

BILLING CODE 3620-01-M

Notices

Federal Register
Vol. 57, No. 160
Tuesday, August 18, 1992

This section of the FEDERAL REGISTER contains documents other than rules or proposed rules that are applicable to the public. Notices of hearings and investigations, committee meetings, agency decisions and rulings, delegations of authority, filing of petitions and applications and agency statements of organization and functions are examples of documents appearing in this section.

DEPARTMENT OF AGRICULTURE

Commodity Credit Corporation

Bylaws of Corporation

The Bylaws of the Commodity Credit Corporation, amended July 29, 1992, are as follows:

Offices

1. The principal office of the Corporation shall be in the City of Washington, District of Columbia, and the Corporation shall also have offices at such other places as it may deem necessary or desirable in the conduct of its business.

Seal

2. There is impressed below the official seal which is hereby adopted for the Corporation. Said seal may be used by causing it or a facsimile thereof to be impressed or affixed or reproduced.

Meetings of the Board

3. Regular meetings of the Board shall be held, whenever necessary, on Wednesday at 9:30 a.m. in the Board meeting room in the U.S. Department of Agriculture in the City of Washington, DC Notice of such meetings shall be provided in the same manner as is specified for special meetings in Paragraph 4. No regular meetings of the Board shall be held except in accordance with provisions of the Government in the Sunshine Act (5 U.S.C. 552b).

4. Special meetings of the Board may be called at any time by the Chairman, the Vice Chairman, or by the President, or the Executive Vice President and shall be called by the Chairman, the Vice Chairman, the President, or the Executive Vice President at the written request of any five Members. Notice of special meetings shall be given either personally or by mail (including intradepartmental mail channels of the Department of Agriculture or interdepartmental mail channels of the Federal Government) or by mailgram, and notice by telephone shall be personal notice. Any member may waive in writing such notice as to himself, whether before or after the time of the meeting, and the presence of a Member at any meeting shall constitute a waiver of notice of such meeting. No notice of an adjourned meeting need be given. Any and all business may be transacted at any special meeting unless otherwise indicated in the notice thereof. No special meetings of the Board shall be held except in accordance with provisions of the Government in the Sunshine Act (5 U.S.C. 552b).

5. The Secretary of Agriculture shall serve as Chairman of the Board. The Deputy Secretary of Agriculture shall serve as Vice Chairman of the Board and, in the absence or unavailability of the Chairman, shall preside at meetings of the Board. In the absence or unavailability of the Chairman and the Vice Chairman, the President of the Corporation shall preside at meetings of the Board. In the absence or unavailability of the Chairman, the Vice Chairman, and the President, the Members present at the meeting shall designate a Presiding Officer.

6. At any meeting of the Board a quorum shall consist of five Members. The act of a majority of the Members present at any meeting at which there is a quorum shall be the act of the Board.

7. The General Counsel of the Department of Agriculture, whose office shall perform all legal work of the Corporation, and the Associate General Counsel in the Office of the General Counsel who is in immediate charge of legal work for the Corporation shall, as General Counsel and Associate General Counsel of the Corporation, respectively, attend meetings of the Board.

8. The Executive Vice President, the Vice President who is the Associate Administrator of the Agricultural Stabilization and Conservation Service, and the Secretary shall attend meetings of the Board. Each of the other Vice Presidents and Deputy Vice Presidents, and the Controller shall attend meetings of the Board during such time as the meetings are devoted to consideration of matters as to which they have responsibility.

9. Other persons may attend meetings of the Board upon specific authorization by the Chairman, Vice Chairman, or President.

Compensation of Board Members

10. The compensation of each Member shall be prescribed by the Secretary of Agriculture. Any Member who holds another office or position under the Federal Government, the compensation for which exceeds that prescribed by the Secretary of Agriculture for such Member, may elect to receive compensation at the rate provided for such other office or position in lieu of compensation as a Member.

Officers

11. The officers of the Corporation shall be a President, Vice Presidents, and Deputy Vice Presidents as hereinafter provided for, a Secretary, a Controller, a Treasurer, a Chief Accountant, and such additional officers as the Secretary of Agriculture may appoint.

12. The Under Secretary of Agriculture for International Affairs and Commodity Programs shall be ex officio President of the Corporation.

13. The following officials of the Agricultural Stabilization and Conservation Service (hereinafter referred to as ASCS), Foreign Agricultural Service (hereinafter referred to as FAS), Food and Nutrition Service (hereinafter referred to as FNS), and the Agricultural Marketing Service (hereinafter referred to as AMS) shall ex officio officers of the Corporation:

Administrator, ASCS; Executive Vice President.
Administrator, AMS; Vice President.
Administrator, FAS; Vice President.
Deputy Administrator, FNS; Vice President.

General Sales Manager and Associate Administrator, FAS; Vice President.
Associate Administrator, ASCS; Vice President.
Deputy Administrator, State and County Operations, ASCS; Deputy Vice President.
Deputy Administrator, Commodity Operations, ASCS; Deputy Vice President.
Deputy Administrator, Management, ASCS; Deputy Vice President.
Deputy Administrator, Policy Analysis, ASCS; Deputy Vice President.
Executive Assistant to the Administrator, ASCS; Secretary.
Director, Executive Analysis and Appraisal Staff, Office of the Administrator, ASCS; Deputy Secretary.
Director, Financial Management Division, ASCA; Controller.
Deputy Director for Domestic Programs, Financial Management Division, ASCS; Deputy Controller.
Deputy Director for Foreign Programs, Financial Management Division, ASCS; Treasurer.
Chief, Financial Accounting, Reports and Analysis Branch, Financial Management Division, ASCS; Chief Accountant.

The person occupying, in an acting capacity, the office of any person designated ex officio by this paragraph 13 as an officer of the Corporation shall, during his occupancy of such office, act as such officer.

14. Officers who do not hold office ex officio shall be appointed by the Secretary of Agriculture and shall hold office until their respective appointments shall have been terminated.

The President

15. (a) The President shall have general supervision and direction of the Corporation, its officers and employees.

(b) The President shall establish and direct an Office of the Secretariat. Such office shall be responsible for obtaining on developing, or as the President determines, information on major program or policy proposals submitted to the Board.

The Vice Presidents

16. (a) The Executive Vice President shall be the chief executive officer of the Corporation and shall be responsible for submission of all Corporation policies and programs to the Board. Except as provided in paragraphs (b), (c), (d), and (e) below, the Executive Vice President shall have general supervision and direction of the preparation of policies and programs for submission to the Board, of the administration of the policies and programs approved by the Board, and of the day-to-day conduct of the business of the Corporation and of its officers and employees.

(b) The Vice President who is the Administrator, FAS, shall be responsible for preparation for submission by the Executive Vice President to the Board of those policies and programs of the Corporation which are for performance through the facilities and personnel of FAS. He shall also have responsibility for the administration of those operations of the Corporation, under policies and programs approved by the Board, which are carried out through facilities and personnel of FAS. He shall also perform such special duties and exercise such powers as may be prescribed, from time to time, by the Secretary of Agriculture, the Board, or the President of the Corporation.

(c) The Vice President who is Administrator, AMS, shall be responsible for the administration of those operations of the Corporation, under policies and programs approved by the Board, which are carried out through facilities and personnel of AMS. He shall also perform such special duties and exercise such powers as may be prescribed, from time to time, by the Secretary of Agriculture, the Board, or the President of the Corporation.

(d) The Vice President who is the General Sales Manager and Associate Administrator, FAS, shall be responsible for preparation for submission by the Executive Vice President to the Board of policies and programs of the Corporation which are for performance through the facilities and personnel of FAS. He shall also have responsibility for the administration of those operations of the Corporation, under the policies and programs approved by the Board, which are carried out through facilities and personnel of FAS. He shall also perform such special duties and exercise such powers as may be prescribed, from time to time, by the Secretary of Agriculture, the Board, or the President of the Corporation.

(e) The Vice President who is the Administrator, FNS, shall be responsible for the administration of those operations of the Corporation, under policies and programs approved by the Board, which are carried out through facilities and personnel of FNS. He shall also perform such special duties and exercise such powers as may be prescribed, from time to time, by the Secretary of Agriculture, the Board, or the President of the Corporation.

17. The Vice President who is the Associate Administrator, ASCS, and the Deputy Vice Presidents shall assist the Executive Vice President in the performance of his duties and the exercise of his powers to such extent as the President or the Executive Vice President shall prescribe, and shall perform such special duties and exercise such powers as may be prescribed, from time to time, by the Secretary of Agriculture, the Board, the President of the Corporation, or the Executive Vice President of the Corporation.

The Secretary

18. The Secretary shall attend and keep the minutes of all meetings of the Board; shall attend to the giving and serving of all required notices of meetings of the Board; shall sign all powers and instruments to which his signature shall be necessary or appropriate; shall attest the authenticity of and affix the seal of the Corporation upon any instrument requiring such action and shall perform such other duties and exercise such other powers as are commonly incidental to the Office of Secretary as well as such other duties as may be prescribed, from time to time, by the President or the Executive Vice President.

The Controller

19. (a) The Controller shall have charge of all fiscal and accounting affairs of the Corporation, including all borrowings and related financial arrangements, claims activities, and formulation of prices in accordance with established policies; and shall perform such other duties as may be prescribed, from time to time, by the President or the Executive Vice President.

(b) The Deputy Controller shall assist the Controller in the administration of all fiscal and accounting affairs of the Corporation, including all borrowings and related financial arrangements, claims activities, and formulation of prices in accordance with established policies; and shall perform such other duties as may be prescribed, from time to time, by the President or the Executive Vice President.

The Treasurer

20. The Treasurer, under the general supervision and direction of the Controller, shall have charge of the custody, safekeeping and disbursement of all funds of the Corporation; shall designate qualified persons to authorize disbursement of corporate funds; shall direct the disbursement of funds by disbursing officers of the Corporation or by the Treasurer of the United States, Federal Reserve Banks and other fiscal agents of the Corporation; and shall issue instructions incidental thereto; shall be responsible for documents

relating to the general financing operations of the Corporation, including borrowings from the United States Treasury, commercial banks and others; shall arrange for the payment of interest on and the repayment of such borrowings; shall arrange for the payment of interest on the capital stock of the Corporation; shall coordinate and give general supervision to the claims activities of the Corporation and shall have authority to collect all monies due the Corporation, to receipt therefor and to deposit same for the account of the Corporation; and shall perform such other duties relating to the fiscal and accounting affairs of the Corporation as may be prescribed, from time to time, by the Controller.

The Chief Accountant

21. The Chief Accountant, under the general supervision and direction of the Controller, shall have charge of the general books and accounts of the Corporation and the preparation of financial statements and reports. He shall be responsible for the initiation, preparation and issuance of policies and practices related to accounting matters and procedures, including official inventories, records, accounting and related office procedures where standardized, and adequate subsidiary records of revenues, expenses, assets and liabilities; and shall perform such other duties relating to the fiscal and accounting affairs of the Corporation as may be prescribed, from time to time, by the Controller.

Other Officials

22. Except as otherwise authorized by the Secretary of Agriculture or the Board, the operations of the Corporation shall be carried out through the facilities and personnel of ASCS, FAS, FNS, and AMS in accordance with any assignment of functions and responsibilities made by the Secretary of Agriculture and, within his respective agency or office, by the Administrators of ASCS, FAS, FNS, AMS, or the General Sales Manager and Associate Administrator, FAS.

23. The Directors of the divisions and the Directors of the Kansas City Commodity Office and the Kansas City Management Office of the ASCS shall be Contracting Officers and executives of the Corporation in general charge of the activities of the Corporation carried out through their respective divisions or offices. The responsibilities of such Directors in carrying out activities of the Corporation, which shall include the authority to settle and adjust claims by and against the Corporation arising out of activities under their jurisdiction, shall be discharged in conformity with these Bylaws and applicable programs, policies, and procedures.

Contracts of the Corporation

24. Contracts of the Corporation relating to any of its activities may be executed in its name by the Secretary of Agriculture or the President. The Vice Presidents, the Deputy Vice Presidents, the Controller, the Deputy Controller, the Treasurer, and the Directors of the divisions and the Directors of the Kansas City Commodity Office and the Kansas City Management Office of the ASCS may execute contracts relating to the activities of the Corporation for which they are respectively responsible.

25. The Executive Vice President who is the Administrator of ASCS and, subject to the written approval by such Executive Vice President of each appointment, the Vice Presidents, the Deputy Vice Presidents, the Controller, the Deputy Controller, and the Directors of the divisions and the Directors of the Kansas City Commodity Office and the Kansas City Management Office of the ASCS may appoint, by written instrument or instruments, such Contracting Officers as they deem necessary, who may, to the extent authorized by such instrument or instruments, execute contracts in the name of the Corporation. A copy of each such instrument shall be filed with the Secretary.

26. Appointments of Contracting Officers may be revoked by written instrument or instruments by the Executive Vice President or by the official who made the appointment. A copy of each instrument shall be filed with the Secretary.

27. In executing a contract in the name of the Corporation, an official shall indicate his title.

Annual Report

28. The Executive Vice President shall be responsible for the preparation of an annual report of the activities of the Corporation, which shall be filed with the Secretary of Agriculture and with the Board.

Amendments

29. These Bylaws may be altered or amended or repealed by the Secretary of Agriculture, or subject to his approval by action of the Board at any regular meeting of the Board or at any special meeting of the Board, if notice of the proposed alteration, amendment, or repeal be contained in the notice of such special meeting.

Approval of Board Action

30. The actions of the Board shall be subject to the approval of the Secretary of Agriculture.

I, James V. Hansen, Secretary, Commodity Credit Corporation, do hereby certify that the above is a full, true, and correct copy of the Bylaws of Commodity Credit Corporation, as amended July 29, 1992.

In witness whereof I have officially subscribed my name and have caused the corporate seal of the said Corporation to be affixed this tenth day of August, 1992.

James V. Hansen,

Secretary, Commodity Credit Corporation.

[FR Doc. 92-19623 Filed 8-17-92; 8:45 am]

BILLING CODE 3410-05-M

Forest Service

Polk Inlet Project Area, Tongass National Forest, Ketchikan Area, Prince of Wales Island, AK

AGENCY: Forest Service, USDA.

ACTION: Revision of notice of intent to prepare environmental impact statement.

The Department of Agriculture, Forest Service, hereby revises the Notice of Intent to prepare an Environmental Impact Statement (EIS) for the Polk Inlet project area. The Notice of Intent for this project was published September 6, 1991.

The project planning area for the Polk Inlet Environmental Impact Statement will be expanded to include all of Management Areas K17 and K18, including areas outside the Ketchikan Pulp Company Sale Area. Timber sale offerings within the Primary Sale Area would be made available to Ketchikan Pulp Company. Sale offerings outside the Primary Sale Area could be made available to either the Long-Term Sale Contract or the Ketchikan Area Independent Timber Sale Program.

The Responsible Official has been delegated from the Regional Forester to the Ketchikan Area Forest Supervisor.

DATES: Initial scoping was accomplished during the Fall of 1991. Additional comments concerning this clarification need to be received by September 15, 1992.

ADDRESSES: Written comments must be sent to David D. Rittenhouse, Forest Supervisor, Tongass National Forest,

Ketchikan Area, Federal Building, Ketchikan, AK 99901.

FOR FURTHER INFORMATION CONTACT: Questions should be directed to David Arrasmith, Planning Team Staff Officer, Tongass National Forest, Ketchikan Area, Federal Building, Ketchikan, AK 99901, phone 907-225-3101.

David D. Rittenhouse, Forest Supervisor, Tongass National Forest, Ketchikan Area, Federal Building, Ketchikan, Alaska, is the responsible official. The responsible official will consider the comments, responses, disclosure of environmental consequences, and applicable laws, regulations, and policies in making a decision regarding this proposal. The responsible official will document the decision and rationale in the Record of Decision.

Dated: August 12, 1992.

David D. Rittenhouse,

Forest Supervisor.

[FR Doc. 92-19595 Filed 8-17-92; 8:45 am]

BILLING CODE 3410-11-M

DEPARTMENT OF COMMERCE

Agency Forms Under Review by the Office of Management and Budget

DOC has submitted to the Office of Management and Budget (OMB) for clearance the following proposals for collection of information under the provisions of the Paperwork Reduction Act (44 U.S.C. Chapter 35).

Agency: International Trade Administration (ITA).

Title: Overseas Business Interest Questionnaire.

Agency Form Number: ITA-471P.

OMB Approval Number: 0625-0039.

Type of Request: Extension of the expiration date of a currently approved collection.

Burden: 500 hours.

Number of Respondents: 1,000.

Avg Hours Per Response: 30 minutes.

Needs and Uses: This collection allows U.S. firms participating in overseas trade events sponsored by ITA to specifically identify their marketing objective for the event, as well as current marketing activities and status in the specific foreign markets where the event will take place. The U.S. and Foreign Commercial Service/ITA overseas posts use the information to schedule business appointments during the trade event, arrange "blue ribbon" calls on key agents or distributors identified by participants prior to an event, and to issue specific show invitations to appropriate prospective overseas business partners.

Affected Public: Businesses or other for-profit institutions, small businesses or organizations.

Frequency: On occasion.

Respondent's Obligation: Required to obtain or retain a benefit.

OMB Desk Officer: Gary Waxman, (202) 395-7340, room 3208, New Executive Office Building, Washington, DC 20503.

Agency: National Oceanic and Atmospheric Administration (NOAA).

Title: Geostationary Operational Environmental Satellite (GOES) Weather Facsimile Transmission System (WEFAX).

Agency Form Number: No number assigned.

OMB Approval Number: 0648-0227.

Type of Request: Revision of a currently approved collection.

Burden: 50 hours.

Number of Respondents: 200.

Avg Hours Per Response: 15 minutes.

Needs and Uses: Respondents are an International User Community in the public domain who desire to receive and use satellite-derived products from GOES, TIROS, GMS, and METSAT satellites. NOAA requires information to determine the users station location, receiving status, and the type of satellite transmissions received.

Affected Public: Individuals, state or local governments, farms, business or other for-profit organizations, Federal agencies or employees, non-profit institutions, small businesses or organizations.

Frequency: Annually.

Respondent's Obligation: Voluntary.

OMB Desk Officer: Ron Minsk, (202) 395-3084, room 3019, New Executive Office Building, Washington, DC 20503.

Copies of the above information collection proposals can be obtained by calling or writing Edward Michals, DOC Forms Clearance Officer, (202) 377-3271, Department of Commerce, room 5327, 14th and Constitution Avenue, NW., Washington, DC 20230.

Written comments and recommendations for the proposed information collections should be sent to the respective OMB Desk Officer listed above.

Dated: August 12, 1992.

Edward Michals,

Departmental Forms Clearance Officer, Office of Management and Organization.

[FR Doc. 92-19579 Filed 8-17-92; 8:45 am]

BILLING CODE 3510-CW-F

Bureau of Export Administration

[Docket Numbers OEE-1-92, OEE-2-92]

Karl Cording and A. Rosenthal (PTY) Ltd., Appellants; Final Decision and Order

On March 19, 1992, at the request of the Deputy Chief Counsel for Enforcement and Litigation, the then Acting Assistant Secretary for Export Administration issued an Order temporarily denying export privileges (TDO) to Appellants and others. The request stated that an investigation by the Office of Export Enforcement, Bureau of Export Administration, United States Department of Commerce (the Department) gave reason to believe that Appellants "have obtained and may continue to obtain U.S.-origin shotguns having a barrel length of 18 inches or more (shotguns), by misrepresenting the shotguns' end user and ultimate destination, in order to divert them from their licensed destination to South Africa, either directly, or indirectly through other African nations." In particular, the request asserted that U.S.-origin shotguns licensed for export to a Charleshill Trading Company in Ghanzi, Botswana, had been and were likely to be diverted to Namibia and South Africa, countries subject during various times to an arms embargo.

Based on this information, the Acting Assistant Secretary issued the TDO pursuant to the provisions of § 788.19 of the Export Administration Regulations (currently codified at 15 CFR parts 768-799 (1991)), issued pursuant to the Export Administration Act of 1979, as amended (currently codified at 50 U.S.C.A. app. 2401-2420 (1991)).[1] The Acting Assistant Secretary found that "an order temporarily denying the export privileges of respondents is necessary in the public interest to prevent an imminent violation of the Act and the Regulations and to give notice to companies in the United States and abroad to cease dealing with respondents in goods and technical data subject to the Act and the Regulations." The TDO is to be effective for 180 days.

On July 22, 1992, the Administrative Law Judge entered a Recommended Decision in which he concluded, "[T]here is neither a factual nor legal basis for the Temporary Denial Order." Recommended Decision, p. 22. The ALJ recommended that the TDO be vacated.

[1] The Act expired on September 30, 1990. Executive Order 12730 (55 FR 40373, October 2, 1990) continued the Regulations in effect under the International Emergency Economic Powers Act (50 U.S.C.A. 1701-1706 (1991)).

The ALJ dismissed the Department's contention that the Charleshill Trading Company did not exist and that the inclusion of U.S.-origin guns and munitions in a catalog and advertisement circulated in Namibia as well as South Africa demonstrated an intention to violate U.S. export controls. The ALJ concluded, "[T]he record in support of a temporary denial order, when such action is permitted, must include at least a probable cause showing of a violation as well as evidence of the probability of an imminent violation." Recommended Decision, pp. 21–22.

Pursuant to section 13(d)(2) of the Export Administration Act, a TDO is to be affirmed "only if it is reasonable to believe that the order is required in the public interest to prevent an imminent violation of this act or any regulation, order, or license issued under this Act (citations omitted)." 50 U.S.C.A. app. 2412(b)(2). I note that the Department received credible information from a commercial officer in the American Embassy in Botswana that Charleshill did not exist. Most significantly in this regard, the Botswana police, which maintains an "arms registry", had no record of Charleshill being listed as a company authorized to buy, sell, or trade arms and/or ammunition. Moreover, correspondence from Respondent Cording suggests that Charleshill ceased operations in the late 1980's. Therefore, I find that the evidence in the record is sufficient to support the TDO. The conclusion of the ALJ is hereby vacated.

The ALJ also held that the Department lacked legislative authority to issue the TDO in light of the expiration of the Export Administration Act of 1979. On May 15, 1992, the Department's General Counsel provided the ALJ with a Memorandum of Law on the effect of the expiration. The General Counsel advised that Executive Order 12730 issued by the President on September 30, 1990 pursuant to his authority under the Constitution and the International Economic Emergency Powers Act provided the necessary authority for administrative proceedings to enforce export control regulations. In In the Matter of Iran Air (Docket No. 0120–01), I adopted this opinion *in toto*. I do likewise here. Therefore, the General Counsel's opinion is the law in this case and all references in the ALJ's Recommended Decision that purport to question the Department's authority under the Export Administration Act and Regulations as provided by Executive Order 12730 are also hereby vacated.

Accordingly, I find that the record supports a reasonable belief that a temporary denial order is required to prevent an imminent violation of U.S. export controls. I hereby affirm the TDO against Appellants. This constitutes the final agency action on this matter.

Dated: July 29, 1992.

Joan M. McEntee,

Acting Under Secretary for Export Administration.

[FR Doc. 92–19599 Filed 8–17–92; 8:45 am]

BILLING CODE 3510–DT–M

International Trade Administration

[A–100–003 and C–100–004]

Advanced Notice of Additional Streamlining Procedures for the Antidumping and Countervailing Duty Investigations of Certain Steel Products From Various Countries

AGENCY: Import Administration, International Trade Administration, Department of Commerce.

EFFECTIVE DATE: August 18, 1992. Written comments will be considered before the Department issues a final decision regarding this matter, if received not later than five business days after publication of this notice.

FOR FURTHER INFORMATION CONTACT: Ann Sebastian, APO Specialist for Investigations, at (202) 377–3354, or Gary Taverman, Division Director, Office of Antidumping Investigations, at (202) 377–0161.

SUMMARY: The International Trade Administration (ITA) is proposing an additional streamlining procedure to be used in the antidumping (AD) and countervailing duty (CVD) investigations of certain steel product from various countries.

Under the proposal, the records of the AD investigations of each class or kind of merchandise from one country would be combined to create a single AD record for each country, as is now being done in the CVC investigations. A single administrative protective order (APO) would apply to the consolidated record for each country subject to AD or CVD investigations. Under this proposal, respondents would file only one set of AD or CVD questionnaire responses, as appropriate, for all relevant classes or kinds of merchandise for each country, including both the narrative response, and computer tape/diskette submissions, rather than separate responses and databases for each class or kind of merchandise subject to investigation. Likewise, only a single set of ten copies, rather than up to four sets of ten copies, of any other submission by any party would have to be made for one country. The intent is that each party would make only one APO version (and one public version) of any submission for each country, rather than one for each separate class or kind, or different combinations of classes or kinds of merchandise. A single APO version of a submission substantially reduces the possibility of inadvertent APO violations.

Under this proposal, only the records would be combined under a lead case number. Separate investigations for each class or kind of merchandise will continue to be conducted. The proposed procedure is intended to simplify the administration of the AD and CVD duty provisions of the Tariff Act of 1930, as amended. It is also intended to reduce the number of filings required of parties in each investigation, and to prevent inadvertent APO violations.

If adopted, any party to the proceedings who wishes to apply for an APO would submit its applications using the lead case number for all applicable classes or kinds of merchandise from that country being investigated. Lead case numbers are currently being utilized in the CVD investigations. The lead AD case numbers by country would be as follows: Argentina (A–357–808), Australia (A–602–803), Austria (A–433–803), Belgium (A–423–803), Brazil (A–351–814), Canada (A–122–820), Finland (A–405–802), France (A–427–806), Germany (A–428–813), Italy (A–475–807), Japan (A–588–824), Korea (A–580–814), Mexico (A–201–808), Netherlands (A–421–803), Poland (A–455–802), Romania (A–485–803), Spain (A–469–802), Sweden (A–401–805) and United Kingdom (A–412–814). For example, counsel participating in any of the above-referenced AD investigations from France would file one application to include hot-rolled, cold-rolled and corrosion resistant carbon steel flat products and certain cut-to-length carbon steel plate from France, using (A–427–806) as the lead case number. However, all appropriate case numbers should continue to appear on each document. Similar practices would continue to be followed in the CVD investigations.

This would not affect the deadlines for filing applications for APO as set forth in 19 CFR 353.34(b) and 355.34(b). The Department would accept amendments to previously submitted protective order requests to reflect these changes.

Comments: Written comments will be considered before the Department issues a final decision regarding this matter, if

received not later than five business days after publication of this notice. Address written comments (10 copies) to Alan M. Dunn, Assistant Secretary for Import Administration, Central Records Unit, room B-099, U.S. Department of Commerce, Pennsylvania Avenue and 14th Street, NW., Washington, DC 20230. Comments should be addressed: Attention: Notice of Proposed Combined Steel Records.

Dated: August 14, 1992.

Alan M. Dunn,

Assistant Secretary for Import Administration.

[FR Doc. 92-19825 Filed 8-14-92; 8:45 am]

BILLING CODE 3300-8-700-M

National Oceanic and Atmospheric Administration

Florida Keys, National Marine Sanctuary Advisory Council; Meetings

AGENCY: Sanctuaries and Reserves Division (SRD), Office of Ocean and Coastal Resource Management (OCRM), National Ocean Service (NOS), National Oceanic and Atmospheric Administration (NOAA), Department of Commerce.

ACTION: Florida Keys National Marine Sanctuary Advisory Council notice of open meeting.

SUMMARY: The Council was established in December 1991 to advise and assist the Secretary of Commerce in the development and implementation of the comprehensive management plan for the Florida Keys National Marine Sanctuary.

TIME AND PLACE: August 31 and September 1, 1992 from 9 a.m. until adjournment. The meeting location will be at the Hawks Cay Resort, Mile Marker 61, Route 1, Duck Key, Florida.

AGENDA:

1. Discussion of Water Use Zoning Scheme.
2. Discussion of Management Alternatives.
3. Discussion of Interim Memorandum of Agreement between NOAA and the State of Florida.

PUBLIC PARTICIPATION: The meeting will be open to public participation; each day the time periods from 11:30 a.m. to noon, and 4 p.m. to 5 p.m., will be set aside for oral comments and questions. Seats will be set aside for the public and the media. Seats will be available on a first-come first-served basis.

FOR FURTHER INFORMATION CONTACT: Pamala James at (305) 743-2437 or Ben Haskell at (202) 606-4016.

Federal Domestic Assistance Catalog Number 11.429 Marine Sanctuary Program.

Dated: August 8, 1992.

W. Stanley Wilson,

Assistant Administrator for Ocean Services and Coastal Zone Management.

[FR Doc. 92-19596 Filed 8-17-92; 8:45 am]

BILLING CODE 3510-08-M

COMMITTEE FOR THE IMPLEMENTATION OF TEXTILE AGREEMENTS

Request for Public Comments on Bilateral Textile Consultations with the Government of India on Certain Cotton and Man-Made Fiber Textile Products

August 12, 1992.

AGENCY: Committee for the Implementation of Textile Agreements (CITA).

ACTION: Issuing a directive to the Commissioner of Customs establishing a limit.

EFFECTIVE DATE: August 19, 1992.

FOR FURTHER INFORMATION CONTACT: Jennifer Tallarico, International Trade Specialist, Office of Textiles and Apparel, U.S. Department of Commerce, (202) 377-4212. For information on the quota status of this limit, refer to the Quota Status Reports posted on the bulletin boards of each Customs port or call (202) 927-6705. For information on embargoes and quota re-openings, call (202) 377-3715. For information on categories on which consultations have been requested, call (202) 377-3740.

SUPPLEMENTARY INFORMATION:

Authority: Executive Order 11651 of March 3, 1972, as amended; section 204 of the Agricultural Act of 1956, as amended (7 U.S.C. 1854).

On July 28, 1992, under the terms of the Bilateral Cotton, Wool, Man-Made Fiber, Silk Blend and Other Vegetable Fiber Textile Agreement of February 6, 1987, as amended and extended, between the Governments of the United States and India, the United States Government requested consultations with the Government of India with respect to cotton and man-made fiber coats in Categories 334/634.

The purpose of this notice is to advise the public that, pending agreement on a mutually satisfactory solution concerning Categories 334/634, the Government of the United States has decided to control imports during the ninety-day period which began on July 28, 1992 and extends through October 25, 1992.

If no solution is agreed upon in consultations between the two governments, CITA, pursuant to the agreement, may later establish a specific limit for the entry and withdrawal from warehouse for consumption of textile products in Categories 334/634, produced or manufactured in India and exported during the prorated period beginning on July 28, 1992 and extending through December 31, 1992, of not less than 36,587 dozen.

A summary market statement concerning Categories 334/634 follows this notice.

Anyone wishing to comment or provide data or information regarding the treatment of Categories 334/634, under the agreement with the Government of India, or to comment on domestic production or availability of products included in Categories 334/634, is invited to submit 10 copies of such comments or information to Auggie D. Tantillo, Chairman, Committee for the Implementation of Textile Agreements, U.S. Department of Commerce, Washington, DC 20230; ATTN: Helen L. LeGrande. The comments received will be considered in the context of the consultations with the Government of India.

Because the exact timing of the consultations is not yet certain, comments should be submitted promptly. Comments or information submitted in response to this notice will be available for public inspection in the Office of Textiles and Apparel, room H3100, U.S. Department of Commerce, 14th and Constitution Avenue, NW., Washington, DC.

Further comments may be invited regarding particular comments or information received from the public which the Committee for the Implementation of Textile Agreements considers appropriate for further consideration.

The solicitation of comments regarding any aspect of the agreement or the implementation thereof is not a waiver in any respect of the exemption contained in 5 U.S.C. 553(a)(1) relating to matters which constitute "a foreign affairs function of the United States."

The United States remains committed to finding a solution concerning Categories 334/634. Should such a solution be reached in consultations with the Government of India, further notice will be published in the **Federal Register**.

A description of the textile and apparel categories in terms of HTS numbers is available in the CORRELATION: Textile and Apparel Categories with the Harmonized Tariff Schedule of the United States (see

Federal Register notice 56 FR 60101, published on November 27, 1991).

Auggie D. Tantillo,

Chairman, Committee for the Implementation of Textile Agreements.

Market Statement—India

Category 334/634—Cotton and Man-Made Fiber Coats

July 1992

Import Situation and Conclusion

U.S. imports of men's and boys' cotton and man-made fiber coats, Category 334/634, from India reached 70,160 dozen in the year ending May 1992, 79 percent above the 39,098 dozen imported a year earlier. During the first five months of 1992, imports of Category 334/634 from India reached 21,732 dozen, 28 percent above their January-May 1991 level.

The sharp and substantial increase in Category 334/634 imports from India is causing a real risk of disruption in the U.S. market for men's and boys' cotton and man-made fiber coats.

U.S. Production, Import Penetration, and Market Share

U.S. production of men's and boys' cotton and man-made fiber coats, Category 334/634, declined from 5,380,000 dozen in 1987 to 3,714,000 dozen in 1991, a 31 percent decline. In contrast, U.S. imports of men's and boys' cotton and man-made fiber coats, Category 334/634, increased from 5,164,000 dozen in 1987 to 5,792,000 dozen in 1991, an increase of 12 percent. Category 334/634 imports surged in 1992 increasing 24 percent over the January-May 1991 level. The domestic manufacturers' share of the U.S. men's and boys' cotton and man-made fiber coats market fell from 51 percent in 1987 to 39 percent in 1991, a drop of 12 percentage points. The ratio of imports to domestic production increased from 96 percent in 1987 to 156 percent in 1991.

Duty-Paid Value and U.S. Producers' Price

Approximately 73 percent of Category 334/634 imports from India during the year ending May 1992 entered under HTSUSA numbers 6201.92.2050—men's cotton anoraks, windbreakers, and similar coats, other than those of corduroy or blue denim and 6201.93.3000—men's or boys' water resistant man-made fiber anoraks, windbreakers, and similar coats. These coats entered the U.S. at landed duty-paid values below U.S. producers' prices for comparable coats.

Committee for the Implementation of Textile Agreements

August 12, 1992.

Commissioner of Customs,

Department of the Treasury, Washington, DC 20229.

Dear Commissioner: Under the terms of section 204 of the Agricultural Act of 1956, as amended (7 U.S.C. 1854), and the Arrangement Regarding International Trade in Textiles done at Geneva on December 20, 1973, as further extended on July 31, 1991; pursuant to the Bilateral Cotton, Wool, Man-Made Fiber, Silk Blend and Other Vegetable Fiber Textile Agreement of February 6, 1987, as amended and extended, between the Governments of the United States and India; and in accordance with the provisions of Executive Order 11651 of March 3, 1972, as amended, you are directed to prohibit, effective on August 19, 1992, entry into the United States for consumption and withdrawal from warehouse for consumption of cotton and man-made fiber textile products in Categories 334/634, produced or manufactured in India and exported during the ninety-day period beginning on July 28, 1992 and extending through October 25, 1992, in excess of 24,877 dozen [1].

Textile products in Categories 334 and 634 which have been exported to the United States on and after January 1, 1992 shall remain subject to the Group II limit established in the directive dated January 13, 1992 for the period January 1, 1992 through December 31, 1992.

Textile products in Categories 334 and 634 which have been exported to the United States prior to July 28, 1992 shall not be subject to the limit established in this directive.

In carrying out the above directions, the Commissioner of Customs should construe entry into the United States for consumption to include entry for consumption into the Commonwealth of Puerto Rico.

The Committee for the Implementation of Textile Agreements has determined that this action falls within the foreign affairs exception of the rulemaking provisions of 5 U.S.C. 553(a)(1).

Sincerely,

Auggie D. Tantillo,

Chairman, Committee for the Implementation of Textile Agreements.

[FR Doc. 92-19600 Filed 8-17-92; 8:45 am]

BILLING CODE 3510-DR-F

[1] The limit has not been adjusted to account for any imports exported after July 27, 1992.

COPYRIGHT ROYALTY TRIBUNAL

CRT [Docket No. 92-2-PBRA]

1992 Adjustment of the Public Broadcasting Royalty Rates and Terms

AGENCY: Copyright Royalty Tribunal.

ACTION: Deferring date for submission of direct cases.

SUMMARY: The Copyright Royalty Tribunal commenced the public broadcasting rate proceeding effective June 30, 1992 and established a date of September 21, 1992 for the filing of direct cases (57 FR 29066). At the request of the Public Broadcasting Service and the National Public Radio, in order to permit additional time for possible settlement, the Tribunal extends the date for the submission of the direct cases until October 19th.

DATES: Direct cases are to be submitted by October 19, 1992.

FOR FURTHER INFORMATION CONTACT: J.C. Argetsinger, Commissioner, Copyright Royalty Tribunal, 1825 Connecticut Avenue NW., suite 918, Washington, DC 20009, (202) 606-4400.

Dated: August 13, 1992.

Cindy Daub,

Chairman.

[FR Doc. 92-19628 Filed 8-17-92; 8:45 am]

BILLING CODE 1410-09-M

DEPARTMENT OF DEFENSE

General Services Administration

National Aeronautics and Space Administration

[OMB Control No. 9000-0029]

OMB Clearance Request for Extraordinary Contractual Action Requests

AGENCIES: Department of Defense (DOD), General Services Administration (GSA), and National Aeronautics and Space Administration (NASA).

ACTION: Notice of request for an extension to an existing OMB clearance (9000-0029).

SUMMARY: Under the provisions of the Paperwork Reduction Act of 1980 (44 U.S.C. chapter 35), the Federal Acquisition Regulation (FAR) Secretariat has submitted to the Office of Management and Budget (OMB) a request to review and approve an extension of a currently approved information collection requirement concerning Extraordinary Contractual Action Requests.

FOR FURTHER INFORMATION CONTACT: Beverly Fayson, Office of Federal Acquisition Policy, GSA (202) 501-4755.

SUPPLEMENTARY INFORMATION:

A. Purpose

This request covers the collection of information as a first step under Public Law 85-804, as amended by Public Law 93-155 and Executive Order 10789 dated November 14, 1958, that allows contracts to be entered into, amended, or modified in order to facilitate national defense. In order for a firm to be granted relief under the Act, specific evidence must be submitted which

supports the firm's assertion that relief is appropriate and that the matter cannot be disposed of under the terms of the contract.

The information is used by the Government to determine if relief can be granted under the Act and to determine the appropriate type and amount of relief.

B. Annual Reporting Burden

The annual reporting burden is estimated as follows: Respondents, 100; responses per respondent, 1; total annual responses, 100; preparation hours per response, 16; and total response burden hours, 1,600.

Obtaining Copies of Proposals

Requester may obtain copies of OMB applications or justifications from the General Services Administration, FAR Secretariat (VRS), room 4037, Washington, DC 20405, telephone (202) 501-4755. Please cite OMB Control No. 9000-0029, Extraordinary Contractual Action Requests, in all correspondence.

Dated: August 5, 1992.

Beverly Fayson,

FAR Secretariat.

[FR Doc. 92-19561 Filed 8-17-92; 8:45 am]

BILLING CODE 6820-34-M

Public Information Collection Requirement Submitted to OMB for Review

ACTION: Notice.

The Department of Defense has submitted to OMB for clearance the following proposal for collection of information under the provisions of the Paperwork Reduction Act (44 U.S.C. chapter 35).

Title, Applicable Form, and Applicable OMB Control Number: HEALTH PROFESSIONS ACCESSION FORMS; ATC Forms 1322, 1402, and 1437; OMB No. 0701-0078.

Type of Request: Revision.

Average Burden Hours/Minutes per Response: 1 Hour and 45 Minutes.

Responses per Respondent: 1.

Number of Respondent: 3,600.

Annual Burden Hours: 6,300.

Annual Responses: 3,600.

Needs and Uses: These forms are used by field recruiters in the processing of Health Professions applicants applying for a commission in the United States Air Force.

Affected Public: Individuals or households.

Frequency: On occasion.

Respondent's Obligation: Required to obtain or retain a benefit.

OMB Desk Officer: Mr. Edward C. Springer. Written comments and recommendations on the proposed information collection should be sent to Mr. Springer at the office of Management and Budget, Desk Officer for DoD, room 3235, New Executive Office Building, Washington, DC 20503.

DOD Clearance Officer: Mr. William P. Pearce. Written requests for copies of the information collection proposal should be sent to Mr. Pearce, WHS/DIOR, 1215 Jefferson Davis Highway, suite 1204, Arlington Virginia 22202-4302.

Dated: August 12, 1992.

L.M. Bynum,

Alternate OSD Federal Register Liaison Officer, Department of Defense.

[FR Doc. 92-19559 Field 8-17-92; 8:45 am]

BILLING CODE 3810-01-M

Public Information Collection Requirement Submitted to OMB for Review

ACTION: Notice.

The Department of Defense has submitted to OMB for clearance the following proposal for collection of information under the provisions of the Paperwork Reduction Act (44 U.S.C. chapter 35).

Title, Applicable Form, and Applicable OMB Control Number: OFFICER TRAINING GROUP ACCESSIONS; ATC Forms 1413 and 1422; OMB No. 0701-0080.

Type of Request: Extension of the expiration date of a currently approved collection without any change in the substance or in the method of collection.

Average Burden Hours/Minutes per Response: 1 Hour and 15 Minutes.

Responses per Respondent: 1.

Number of Respondents: 2,000.

Annual Burden Hours: 2,500.

Annual Responses: 2,000.

Needs and Uses: These forms are used by field recruiters in the processing of Officer Training Group applications for commissioning in the United States Air Force.

Affected Public: Individuals or households.

Frequency: On occasion.

Respondent's Obligation: Required to obtain or retain a benefit.

OMB Desk Officer: Mr. Edward C. Springer. Written comments and recommendations on the proposed information collection should be sent to Mr. Springer at the Office of the Management and Budget, Desk Officer for DoD, room 3235, New Executive Office Building, Washington, DC 20503.

DOD Clearance Officer: Mr. William P. Pearce. Written requests for copies of the information collection proposal should be sent to Mr. Pearce, WHS/DIOR, 1215 Jefferson Davis Highway, suite 1204, Arlington, Virginia 22202-4302.

Dated August 12, 1992.

L. M. Bynum,

Alternate OSD Federal Register Liaison Officer, Department of Defense.

[FR Doc. 92-19560 Filed 8-17-92; 8:45 am]

BILLING CODE 3810-01-M

Office of the Secretary

DOD Advisory Group on Electron Devices; Advisory Committee Meeting

SUMMARY: Working Group A (Microwave Devices) of the DoD Advisory Group on Electron Devices (AGED) announces a closed session meeting.

DATES: The meeting will be held at 0900, Monday, 31 August 1992.

ADDRESSES: The meeting will be held at Palisades Institute for Research Services, Inc. 2011 Crystal Drive, suite 307, Arlington, VA 22202.

FOR FURTHER INFORMATION CONTACT: Walter Gelnovatch, AGED Secretariat, 2011 Crystal Drive, suite 307, Arlington, Virginia 22202.

SUPPLEMENTARY INFORMATION: The mission of the Advisory Group is to provide the Under Secretary of Defense for Acquisition, the Director, Defense Advanced Research Projects Agency and the Military Departments with technical advice on the conduct of economical and effective research and development programs in the area of electron devices.

The Working Group A meeting will be limited to review of research and development programs which the Military Departments propose to initiate with industry, universities or in their laboratories. This microwave device area includes programs on developments and research related to microwave tubes, solid state microwave devices, electronic warfare devices, millimeter wave devices, and passive devices. The review will include details of classified defense programs throughout.

In accordance with section 10(d) of Public Law No. 92-463, as amended, (5 U.S.C. app. II 10(d) (1988)), it has been determined that this Advisory Group meeting concerns matters listed in 5 U.S.C. 552b(c)(1) (1988), and that accordingly, this meeting will be closed to the public.

Dated: 12 August 1992.

L. M. Bynum,

Alternate OSD Federal Register Liaison Officer Department of Defense.

[FR Doc. 92-19562 Filed 8-17-92; 8:45 am]

BILLING CODE 3810-01-M

DOD Government-Industry Technical Data Committee; Meeting Cancellation

AGENCY: Office of The Under Secretary of Defense (Acquisition).

ACTION: Cancellation.

SUMMARY: The DoD Government-Industry Technical Data Committee meeting scheduled for August 20, 1992 (57 FR 34913, August 7, 1992) is hereby cancelled. The meetings scheduled for August 19 and September 16-17 are not affected by this change.

Dated: August 12, 1992.

L.M. Bynum,

Alternate OSD Federal Register Liaison Officer, Department of Defense.

[FR Doc. 92-19563 Filed 8-17-92; 8:45 am]

BILLING CODE 3810-01-M

Department of the Army

Armed Forces Epidemiological Board Meeting

AGENCY: Armed Forces Epidemiological Board, DOD.

ACTION: Notice of open meeting.

1. In accordance with section 10(a)(2) of the Federal Advisory Committee Act (Pub. L. 92-463) announcement is made of the following committee meeting:

Name of Committee: Armed Forces Epidemiological Board, DOD.

Date of Meeting: 29-30 October 1992.

Time: 0830-1700—29 October 1992; 0800-1100—30 October 1992.

Place: Parson's Island, Chester, Maryland.

Proposed Agenda: Military preventive medicine program reports, military health care and infectious disease issues.

2. This meeting will be open to the public but limited by space accommodations. Any interested person may attend, appear before, or file statements with the committee at the time and in the manner permitted by the committee. Interested persons wishing to participate should advise the Executive Secretary, AFEB, Skyline Six, 5109 Leesburg Pike, room 667, Falls Church, Virginia 22041-3258.

Kenneth L. Denton,

Army Federal Register Liaison Officer.

[FR Doc. 92-19551 Filed 8-17-92; 8:45 am]

BILLING CODE 3710-08-M

DEPARTMENT OF EDUCATION

[CFDA No.: 84-021A]

Fulbright-Hays Group Projects Abroad Program; Notice Inviting Applications for New Awards for Fiscal Year (FY) 1993

Purpose of Program: The Group Projects Abroad program provides grants to institutions of higher education, State departments of education, and private nonprofit educational organizations to support overseas projects in training, research, and curriculum development in modern foreign languages and area studies by teachers, students, and faculty engaged in a common endeavor. Projects may include short-term seminars, curriculum development, group research or study, or advanced intensive language projects.

Eligible Applicants: Institutions of higher education, State departments of education, private nonprofit educational organizations, and consortia of such institutions, departments, and organizations.

Deadline for Transmittal of Applications: October 23, 1992.

Applications Available: September 4, 1992.

Available Funds: The Administration has requested $2,300,000 for this program for FY 1993. However, the actual level of funding is contingent upon final congressional action.

Estimated Range of Awards: $40,000 to $200,000.

Estimated Average Size of Awards: $70,000.

Estimated Number of Awards: 32.

Project Period: five weeks for short-term seminar projects, six to eight weeks for curriculum development projects, two to twelve months for group research or study projects and up to 36 months for advanced overseas intensive language training projects.

Applicable Regulations: (a) Higher Education Programs in Modern Foreign Language Training and Area Studies—Group Projects Abroad program, 34 CFR part 664; and (b) Education Department General Administrative Regulations (EDGAR), 34 CFR parts 74, 75, 77, 80, 81, 82, 85, and 86.

Priorities

Competitive Priority

Under 34 CFR 75.105(c)(2)(i) and 34 CFR 664.32, the Secretary gives preference to applications that meet the following competitive priority. The Secretary awards up to 5 points to an application that meets this competitive priority in a particularly effective way. These points are in addition to any points the application earns under the selection criteria for the program:

Short-term seminars that develop and improve foreign language and area studies at elementary and secondary schools.

Absolute Priorities

Under 34 CFR 75.105(c)(3) and 34 CFR 664.32, the Secretary gives an absolute preference to applications that meet one of the following priorities. The Secretary funds under this program only applications that meet one of these absolute priorities. The priorities are the following world areas:

Absolute Priority 1—Sub-Saharan Africa.

Absolute Priority 2—Latin America and the Caribbean.

Absolute Priority 3—East Asia.

Absolute Priority 4—Southeast Asia and the Pacific.

Absolute Priority 5—East Central Europe (i.e., Poland, Czechoslovakia, Hungary, Bulgaria, Albania, Rumania, and the new republics that were formerly part of Yugoslavia(, the Baltic States, and other new republics of the former Union of Soviet Socialist Republics.

Absolute Priority 6—The Near East and North Africa.

Absolute Priority 7—South Asia.

For Applications or Information Contact: Lungching Chiao, U.S. Department of Education, 400 Maryland Avenue SW., room 3052, ROB-3, Washington, DC 20202-5332. Telephone: (202) 708-7283. Deaf and hearing impaired individuals may call the Federal Dual Party Relay Service at 1-800-877-8339 (in the Washington, DC 202 area code, 708-9300) between 8 a.m. and 7 p.m., Eastern time.

Program Authority: 22 U.S.C. 2452(b)(6).

Dated: August 11, 1992.

Carolynn Reid-Wallace,

Assistant Secretary for Postsecondary Education.

[FR Doc. 92-19589 Filed 8-17-92; 8:45 am]

BILLING CODE 4000-01-M

International Education Programs: Undergraduate International Studies and Foreign Language Program and the Business and International Education Program

AGENCY: Department of Education.

ACTION: Combined notice inviting applications for new awards for fiscal year (FY) 1993.

SUMMARY: Applications are invited for new awards for FY 1993 under title VI of the Higher Education Act of 1965, as amended (the HEA), for the Undergraduate International Studies and Foreign Language Program and the Business and International Education Program. These programs support America 2000, the President's strategy for moving the Nation toward the National Education Goals. Specifically, National Education Goal 5 calls for all Americans to possess the knowledge and skills necessary to compete in a global economy.

ADDRESSES: The addresses for obtaining applications for, or further information about, these two programs are in the respective announcements for the programs. Deaf and hearing impaired individuals may call the Federal Dual Party Relay Service at 1-800-877-8339 (in the Washington, DC 202 area code, telephone 708-9300) between 8 a.m. and 7 p.m., Eastern time.

INTERNATIONAL EDUCATION PROGRAMS

Title and CFDA No.	Applications available	Application deadline date	Deadline for intergovernmental review	Available funds	Estimated range of awards	Estimated average size of awards	Estimated number of awards
Undergraduate International Studies and Foreign Language Program (84.016)	9/4/1992	11/2/1992	1/4/1993	$1,896,500	$30,000 to 85,000	$61,000	31
Business and International Education Program (84.153)	9/4/1992	11/9/1992	1/11/1993	$1,658,500	$40,000 to 100,000	$73,000	23

Note: The Department is not bound by any estimates in this notice.

CFDA No. 84.016—Undergraduate International Studies and Foreign Language Program

Purpose of Program: Provides grants to strengthen and improve undergraduate instruction in international studies and foreign languages in the United States.

Eligible Applicants: Institutions of higher education, combinations of institutions of higher education, and public and private nonprofit agencies and organizations, including professional and scholarly associations.

Applicable Regulations: (a) The Education Department General Administrative Regulations in 34 CFR parts 74, 75, 77, 79, 82, 85 and 86; and (b) The regulations for this program in 34 CFR parts 655 and 658.

Priority

Under 34 CFR 75.105(c)(2)(i) and section 604(a)(4), title VI of the Higher Education Act of 1965, as amended by the Higher Education Amendments of 1992, the Secretary gives preference to applications that meet the following competitive priority. The Secretary awards 5 points to an application that meets this competitive priority in a particularly effective way. These points are in addition to any points the application earns under the selection criteria for the program:

Applications from institutions of higher education or combinations of such institutions that require entering students to have successfully completed at least 2 years of secondary school foreign language instruction or that require each graduating student to earn 2 years of postsecondary credit in a foreign language (or have demonstrated equivalent competence in the foreign language) or, in the case of a two-year degree granting institutions, offer 2 years of postsecondary credit in a foreign language.

Project Period: 24 to 36 months.

Matching Requirements: An institutional grantee shall pay a minimum of 50 percent of the cost of the project for each fiscal year. This is a new statutory requirement under the Higher Education Amendments of 1992.

For Applications or Information Contact: Christine Corey, U.S. Department of Education, 400 Maryland Avenue SW., room 3053 ROB-3, Washington, DC 20202-5332. Telephone: (202) 708-7283.

Program Authority: 20 U.S.C. 1124.

DFDA No. 84.153—Business and International Education Program

Purpose of Program: Provides grants to enhance international business education programs and to expand the capacity of the business community to engage in international economic activities.

Eligible Applicants: Institutions of higher education that have entered into agreements with business enterprises, trade organizations or associations engaged in international economic activity.

Applicable Regulations: (a) The Education Department General Administrative Regulations in 34 CFR parts 74, 75, 77, 79, 82, 85 and 86; and (b) The regulations for this program in 34 CFR parts 655 and 661.

Project Period: 24 months.

For Applications or Information Contact: Susanna C. Easton, U.S. Department of Education, 400 Maryland Avenue SW., room 3053 ROB-3, Washington, DC 20202-5332. Telephone: (202) 708-7283.

Program Authority: 20 U.S.C. 1130-1130b.

Dated: August 11, 1992.

Carolynn Reid-Wallace,

Assistant Secretary for Postsecondary Education.

[FR Doc. 92-19568 Filed 8-17-92; 8:45 am]

BILLING CODE 4000-01-M

DEPARTMENT OF ENERGY

Federal Energy Regulatory Commission

[Docket Nos. ER92-765-000, et al.]

Potomac Electric Power Company, et al.; Electric Rate, Small Power Production, and Interlocking Directorate Filings

Take notice that the following filings have been made with the Commission:

1. Potomac Electric Power Co.

[Docket No. ER92-765-000]

August 10, 1992.

Take notice that on August 4, 1992, the Potomac Electric Power Company (Pepco) tendered for filing Notice of Termination for Pepco FPC Rate

Schedule No. 18. An effective date of July 31, 1992 is requested for good cause.

Comment date: August 24, 1992, in accordance with Standard Paragraph E at the end of this notice.

2. New England Power Co.

[Docket No. ER92-764-000]

August 10, 1992.

Take notice that on August 4, 1992, New England Power Company (NEP) tendered for filing a new transmission tariff entitled FERC Electric Tariff Original Volume No. 7, Tariff for Transmission Service Over the New Hampshire Corridor. NEP states that the tariff is designed to implement the New Hampshire Corridor Proposal that was approved by the Commission in Northeast Utilities Service Company, Docket Nos. EC90-10-000, *et al.* NEP requests an effective date of September 3, 1992.

Comment date: August 24, 1992, in accordance with Standard Paragraph E at the end of this notice.

3. Northeast Utilities Service Co. (Re: Public Service Company of New Hampshire)

[Docket No. ER92-766-000]

August 10, 1992.

Take notice that on August 4, 1992, Northeast Utilities Service Company (NUSCO) tendered for filing Transmission Tariff No. 4, pursuant to NUSCO's commitment to file the rates, terms and conditions for firm transmission service implementing the New Hampshire Corridor Plan within sixty (60) days of the consummation of the merger between Northeast Utilities (NU) and Public Service Company of New Hampshire (PSNH). NUSCO requests that Tariff No. 4 be made effective on October 5, 1992, which is sixty (60) days after the date of this filing. When effective Tariff No. 4 will make available for subscription 440 MW of long-term firm transmission service across the PSNH system with termination dates ranging from October 31, 2000 to October 31, 2020.

Copies of the filing have been served by first-class mail upon all parties on the official service list compiled by the Secretary in this proceeding. This includes delivery to the public utility commissions in all six New England states.

Comment date: August 24, 1992, in accordance with Standard Paragraph E at the end of this notice.

4. Entergy Services, Inc.

[Docket No. ER92-761-000]

August 10, 1992.

Take notice that on July 31, 1992, Entergy Services, Inc. (Entergy Services), as agent for Arkansas Power & Light Company, Louisiana Power & Light Company, Mississippi Power & Light Company, New Orleans Public Service Inc. on July 31, tendered for filing a Transmission Service Agreement (TSA) between Entergy Services and Entergy Power, Inc. (Entergy Power). The TSA sets out the terms and conditions of firm and non-firm transmission service, for two separate sales of power and energy by Entergy Power to Oglethorpe Power Corporation, under the Entergy Operating Companies Transmission Service Tariff, which has been filed in Docket No. ER91-569-002.

Comment date: August 24, 1992, in accordance with Standard Paragraph E at the end of this notice.

5. Virginia Electric and Power Co.

[Docket No. ER92-466-000]

August 10, 1992.

Take notice that on August 5, 1992, Virginia Electric and Power Company (Virginia Power or the Company) tendered an amendment to its filing of an initial rate schedule in the form of a limited term power purchase agreement (the Agreement) between the Company and Old Dominion Electric Cooperative (Old Dominion) dated November 26, 1991. The schedule provides for Virginia Power to supply Old Dominion with peaking capacity and associated energy for a period beginning January 1, 1993 and ending no later than December 31, 1996. Under the power service agreement, Virginia Power will supply Old Dominion with firm capacity and energy until such time as Old Dominion's output is available from the Clover Generating Station, which is jointly owned by Virginia Power and Old Dominion. This limited term power sales does not affect the Company's existing rates currently on file with the Commission which are applicable to Old Dominion's supplemental power requirements.

Copies of the amended filing were served upon Old Dominion and its counsel, Virginia Municipal Electric Association No. 1, the Virginia State Corporation Commission, and the North Carolina Utilities Commission.

Comment date: August 24, 1992, in accordance with Standard Paragraph E at the end of this notice.

6. Connecticut Light and Power Co.

[Docket No. ER92-523-000]

August 10, 1992.

Take notice that on July 31, 1992, Northeast Utilities Service Company (NUSCO) as agent for The Connecticut Light and Power Company (CL&P) tendered for filing supplemental information regarding a short term sales agreement and addenda for sales to the New York Power Authority (NYPA).

NUSCO states that the filing was made in response to a request by the Commission for additional information. The filing also provides for additional sales pursuant to the original agreement and provides that CL&P's affiliate, Public Service Company of New Hampshire, will be a partial supplier of capacity and energy to NYPA in July, 1992.

NUSCO states that a copy of this filing has been mailed to NYPA.

NUSCO requests that the Commission waive its standard notice period and filing notice regulations to the extent necessary to permit the rate schedule originally filed to become effective April 20, 1992 and for the addenda to become effective June 1, June 17, and July 1, 1992 as dated.

Comment date: August 24, 1992, in accordance with Standard Paragraph E at the end of this notice.

7. Tucson Electric Power Co.

[Docket No. ER92-762-000]

August 10, 1992.

Take notice that on August 3, 1992, Tucson Electric Power Company (Tucson) tendered for filing a Notice of Cancellation of the Short Term Power Sale Agreement between Tucson Electric Power Company and Citizen's Utilities Company.

Comment date: August 24, 1992, in accordance with Standard Paragraph E at the end of this notice.

8. Central and South West Services, Inc.

[Docket No. ER92-760-000]

August 10, 1992.

Take notice that on July 31, 1992, Central and South West Services, Inc. (CSWS), on behalf of the four Central and South West Corporation Operating Companies, Central Power and Light Company, Public Service Company of Oklahoma, Southwestern Electric Power Company and West Texas Utilities Company, tendered for filing a revised Transaction Cost Compensation Procedure for the Central and South West system. The revised Procedure makes available to each of the CSW Operating Companies the option to participate in directly compensating

non-CSW companies for losses by returning energy in kind.

CSWS requests that the revised Procedure be made effective as of October 1, 1992. Copies of the filing have been served on the Arkansas Public Service Commission, the Louisiana Public Service Commission, the Oklahoma Corporation Commission and the Public Utility Commission of Texas. Copies of the filing are also available for inspection in the main offices of each of the CSW Operating Companies.

Comment date: August 24, 1992, in accordance with Standard Paragraph E at the end of this notice.

9. KIAC Partners

[Docket No. QF91-54-002]

August 10, 1992.

On July 24, 1992 and August 4, 1992, KIAC Partners tendered for filing two amendments to its filing in this docket. No determination has been made that the submittal constitutes a complete filing.

The amendments provide additional information pertaining primarily to the ownership structure of the cogeneration facility.

Comment date: August 26, 1992, in accordance with Standard Paragraph E at the end of this notice.

10. Citizens Utilities Co.

[Docket No. ES92-50-000]

August 11, 1992.

Take notice that on August 6, 1992, Citizens Utilities Company (Citizens) filed an application with the Federal Energy Regulatory Commission under section 204 of the Federal Power Act requesting authorization to issue not more than 761,260 shares of common stock, Series B, pursuant to the Citizens Utilities Company 1992 Employee Stock Purchase Plan. Also, Citizens requests exemption from the Commission's competitive bidding regulations.

Comment date: September 8, 1992, in accordance with Standard Paragraph E at the end of this notice.

11. Iowa Southern Utilities Co.

[Docket No. ES92-17-001]

August 11, 1992.

Take notice that on August 5, 1992, Iowa Southern Utilities Company (Iowa Southern) filed an amendment with the Federal Energy Regulatory Commission under section 204 of the Federal Power Act requesting that the authorization be amended as follows:

1. Increase the amount of short-term notes authorized to $50 million for a interim period of 90 days.

2. Permit Iowa Southern to use the inter-company money pool, in addition to commercial paper and short-term notes issued through commercial banks, for short-term financing.

Comment date: August 26, 1992, in accordance with Standard Paragraph E at the end of this notice.

Standard Paragraphs

E. Any person desiring to be heard or to protest said filing should file a motion to intervene or protest with the Federal Energy Regulatory Commission, 825 North Capitol Street, NE., Washington, DC 20426, in accordance with rules 211 and 214 of the Commission's Rules of practice and procedure (18 CFR 385.211 and 385.214). All such motions or protests should be filed on or before the comment date. Protests will be considered by the Commission in determining the appropriate action to be taken, but will not serve to make protestants parties to the proceeding. Any person wishing to become a party must file a motion to intervene. Copies of this filing are on file with the Commission and are available for public inspection.

Lois D. Cashell,

Secretary.

[FR Doc. 92-19608 Filed 8-17-92; 8:45 am]

BILLING CODE 6717-01-M

[Project No. 3706-010 Pennsylvania]

American Hydro Power Co.; Availability of Environmental Assessment

August 12, 1992.

In accordance with the National Environmental Policy Act of 1969 and the Federal Energy Regulatory Commission's regulations, 18 CFR part 380 (Order No. 486, 52 FR 47910), the Office of Hydropower Licensing (OHL) has reviewed an application to breech the timber frame portion of Mussers Dam and to decommission the remaining project facilities. The purpose of the proposed action would be to address concerns regarding the safety of the timber frame portion of the dam.

The Commission's OHL prepared an Environmental Assessment (EA) for the proposed action. The EA concludes that approval of the proposed action would not constitute a major federal action significantly affecting the quality of the human environment.

Copies of the EA are available for review in the Reference and Information Center, room 3308, of the Commission's offices at 941 North Capitol Street, NE., Washington, DC 20426.

Lois D. Cashell,

Secretary.

[FR Doc. 92-19614 Filed 8-17-92; 8:45 am]

BILLING CODE 6717-01-M

[Docket No. TA92-2-31-005]

Arkla Energy Resources, a Division of Arkla, Inc., Petition for Waiver of Commission's Regulations

August 12, 1992.

Take notice that on July 30, 1992, Arkla Energy Resources, a division of Arkla, Inc. (AER), hereby requests a waiver of the Commission's PGA regulations to permit AER to continue to include certain costs in its rates.

AER states that on April 16, 1992, the Commission accepted and suspended the tariff sheets it filed on February 18, 1992. In its order, the Commission required AER to recalculate its assessment of past performance test to reflect the removal of exchange transactions for the third and fourth test intervals. AER states that on May 18, 1992, it filed its tariff sheets to comply with the Commission's April 16 order.

AER states that on June 30, 1992, the Commission issued an order in this proceeding indicating that in performing the recalculation required in the April 16 order, AER had exceeded by $24,352 the 103% threshold for the third test interval in its May 18 filing. AER asserts that the Commission direct AER to either remove the cost from its Account No. 191 or to file a request for waiver of the Commission's regulations to include these costs in its rates.

Any person desiring to protest said filing should file a protest with the Federal Energy Regulatory Commission, 825 North Capitol Street, NW., Washington, DC 20426, in accordance with rule 211 of the Commission's Rules of Practice and Procedure 18 CFR 385.211. All such protests should be filed on or before August 19, 1992. Protests will be considered by the Commission in determining the appropriate action to be taken, but will not serve to make protestants parties to the proceeding. Copies of this filing are on file with the Commission and are available for public inspection.

Lois D. Cashell,

Secretary.

[FR Doc. 92-19552 Filed 8-17-92; 8:45 am]

BILLING CODE 6717-01-M

[Docket No. TA92-1-63-001 and TQ92-7-63-000]

Carnegie Natural Gas Co.; Proposed Changes in FERC Gas Tariff

August 12, 1992.

Take notice that on August 6, 1992, Carnegie Natural Gas Company ("Carnegie") tendered for filing the following substitute primary and alternate revised tariff sheets to its FERC Gas Tariff, Second Revised Volume No. 1:

Sub Thirty-Fourth Revised Sheet No. 8
Sub Thirty-Fourth Revised Sheet No. 9
Sub Alt Thirty-Fourth Revised Sheet No. 8
Sub Alt Thirty-Fourth Revised Sheet No. 9

The above tariff sheets are proposed to become effective September 1, 1992.

Carnegie states that, pursuant to § 154.305(c)(4) of the Commission's regulations, it is updating its Annual PGA filed on July 2, 1992, in Docket No. TA92-1-63-000, to reflect recent changes in the effective sales rates of Carnegie's pipeline supplier, Texas Eastern Transmission Corporation ("Texas Eastern"), pursuant to Texas Eastern's July 30, 1992 filing in Docket No. TQ92-7-17-000. Carnegie states that, except for the correction of a transportaion error in the PGA demand surcharge rate for Rate Schedules LVWS and CDS, no other changes to Carnegie's originally-filed Annual PGA are reflected in this filing.

Carnegie's filing reflects a current estimated average cost of gas of $1.8002 per Dth, based upon total projected commodity costs of $12,007,404 and projected jurisdictional sales of 6,670,000 Dth. The revised rates reflect the following changes from Carnegie's last fully-supported PGA filing in Docket No. TQ92-6-63-000: a $0.0110 per Dth decrease in the demand component of its sales rates under its LVWS and CDS rate schedules; a $0.0347 per Dth decrease in the commodity component of its sales rates under its LVWS and CDS rate schedules; a $0.0003 per Dth decrease in the DCA component of its sales rates under its LVWS and CDS rate schedules; a 0.0351 per Dth decrease in the maximum commodity rate under Rate Schedule SEGSS and a 0.0347 per Dth decrease in the minimum commodity rate under Rate Schedule SEGSS.

Carnegie also states that the base rates reflected in its proposed tariff sheets correspond with the respective base rate changes proposed in the primary and alternate tariff sheets filed by Carnegie in Docket No. RP92-190-000 on June 16, 1992. Carnegie requests that the Commission's acceptance of either the substitute primary or substitute alternate tariff sheets filed in this Annual PGA proceeding be made subject to the outcome of the proceeding in Docket No. RP92-190-000.

Carnegie states that copies of its filing have been served on all jurisdictional customers and interested state commissions.

Any person desiring to intervene or protest said filing should file an intervention and/or protest with the Federal Energy Regulatory Commission, 825 North Capitol Street, NE., Washington, DC 20426, in accordance with rules 214 and 211 of the Commission's Rules of practice and procedure (18 CFR sections 385.214 and 385.211). All such pleadings should be filed on or before August 19, 1992. Protests will be considered by the Commission in determining the appropriate action to be taken, but will not serve to make protestants parties to the proceeding. Copies of this filing are on file with the Commission and are available for public inspection.

Lois D. Cashell,

Secretary.

[FR Doc. 92-19553 Filed 8-17-92; 8:45 am]

BILLING CODE 6717-01-M

[Docket No. RS92-14-000]

CNG Transmission Corp.; Prefiling Conference

August 12, 1992.

Take notice that a prefiling conference will be held in this proceeding on Thursday, August 27, 1992, at 9 a.m. at a location in Washington, DC to be determined later. The purpose of the conference is to discuss CNG's proposed plan for implementation of Order Nos. 636 and 636-A. All parties and the Commission Staff are invited to attend. For additional information, contact William J. Collins at (202) 208-0248.

Lois D. Cashell,

Secretary.

[FR Doc. 92-19610 Filed 8-17-92; 8:45 am]

BILLING CODE 6717-01-M

[Project No. 2809-008 Maine]

Consolidated Hydro Maine, Inc.; Availability of Environmental Assessment

August 12, 1992.

In accordance with the National Environmental Policy Act of 1969 and the Federal Energy Regulatory Commission's regulations, 18 CFR part 380 (Order No. 486, 52 FR 47910), the Office of Hydropower Licensing (OHL) has reviewed the application for a license amendment to include 1-foot-high flashboard already existing at the American Tissue Project on the Cobbosseecontee Stream, Kennebec County, Maine. The staff of OHL's Division of Project Compliance and Administration has prepared an Environmental Assessment (EA) for the proposed actions. In the EA, the staff concludes that approval of the amendment would not constitute a major federal action significantly affecting the quality of the human environment.

Copies of the EA are available for review in the Reference and Information Center, room 3308, of the Commission's Offices at 941 North Capitol Street, NE., Washington, DC 20426.

Lois D.Cashell,

Secretary.

[FR Doc. 92-19615 Filed 8-17-92; 8:45 am]

BILLING CODE 6717-01-M

[Docket No. RP92-217-000]

Distrigas of Massachusetts Corp.; Proposed Changes in FERC Gas Tariff

August 12, 1992.

Take note that the Distrigas of Massachusetts Corporation ("DOMAC"), on August 5, 1992, tendered for filing of its FERC Gas Tariff, First Revised Sheet Volume No. 1, the following tariff sheets:

First Revised Sheet No. 75
Original Sheet No. 75A

These tariff sheets have a proposed effective date of September 4, 1992.

The proposed changes would modify the limits, or "caps," on the call payment that DOMAC is allowed to charge for firm service by including on an interim basis in the formula for calculating the call payment cap under the FVSS rate schedule the demand charges associated with an alternative firm service available in DOMAC's market. The purpose of the proposed change is not to increase customer charges but to permit DOMAC to respond flexibly to current competitive market conditions.

DOMAC states that copies of the filing were served upon DOMAC's jurisdictional customers and interested state commissions.

Any person desiring to be heard or to protect such filing should file a motion to intervene or protest with the Federal Energy Regulatory Commission, 825 North Capitol Street, NE., Washington, DC 20426, in accordance with 18 CFR 385.214 and 385.211 of the Commission's Rules and Procedures. All such motions or protests should be filed on or before August 19, 1992. Protests will be considered by the Commission in

determining the appropriate action to be taken, but will not serve to make protestants parties to the proceeding. Any person wishing to become a party must file a motion to intervene. Copies of this filing are on file with the Commission and are available for public inspection in the public reference room.

Lois D. Cashell,

Secretary.

[FR Doc. 92-19555 Filed 8-17-92; 8:45 am]

BILLING CODE 6717-01-M

[Docket Nos. RS92-60-002 and RS92-60-003]

El Paso Natural Gas Co.; Clarifying Procedures

August 12, 1991.

On July 31, 1992, El Paso Natural Gas Company (El Paso), tendered for filing and acceptance, certain tariff sheets, in order to partially comply with Order No. 636. These tariff sheets would (i) implement a capacity releasing program; and (ii) establish procedures for the assignment of firm upstream capacity held by El Paso. On August 7, 1992, El Paso amended the partial compliance filing in light of Order No. 636-A.

Notice is given that any protest to, or comments on, El Paso's partial compliance filing must be filed with the Commission within 21 days of the August 7, 1992 amended filing, or August 28, 1992. Copies of this filing are on file with the Commission and are available for public inspection in the Public Reference Room.

Lois D. Cashell,

Secretary.

[FR Doc. 92-19609 Filed 8-17-92; 8:45 am]

BILLING CODE 6717-01-M

[Docket No. RP92-216-000]

Florida Gas Transmission Co., Petition for Limited Waiver of Tariff Provisions

August 12, 1992.

Take notice that on August 5, 1992, Florida Gas Transmission Company (FGT) hereby petitions the Federal Energy Regulatory Commission (Commission) for a limited waiver of Commission policy and FGT's FERC Gas Tariff, to the extent necessary, to permit Peoples Gas System, Inc. (Peoples) to retain its existing priority date while adding a new delivery point to an agreement for firm transportation service under Rate Schedule FTS-1; to an agreement for preferred transportation service under Rate Schedule PTS-1; and to an agreement for interruptible transportation service under Rate Schedule ITS-1.

FGT states that good cause exists for granting the requested waivers in that (i) FGT will continue to serve the same customer, Peoples; (ii) the new delivery point will be located in the same geographic location as other existing delivery points at which FGT presently serves Peoples; and (iii) the new delivery point will not interfere with FGT's ability to render firm service to FGT's other customers.

Any person desiring to be heard or to make any protest with reference to said application should on or before August 19, 1992 file with the Federal Energy Regulatory Commission, 825 North Capitol Street, NE., Washington, DC 20426 a motion to intervene or protest in accordance with § 385.211 and 385.214 of the Commission's Rules of practice and procedure 18 CFR 385.211 and 385.214. Protests will be considered by it in determining the appropriate action to be taken, but will not serve to make protestants parties to the proceeding. Any person wishing to become a party must file a motion to intervene in accordance with the Commission's rules.

Copies of this filing are on file with the Commission and are available for public inspection in the Public Reference Room.

Lois D. Cashell,

Secretary.

[FR Doc. 92-19556 Filed 8-17-92; 8:45 am]

BILLING CODE 6717-01-M

[Docket No. RS92-16-000]

Florida Gas Transmission Co.; Prefiling Conference

August 12, 1992.

Take notice that a prefiling conference will be convened in this proceeding on September 2, 1992 at 1:30 p.m. It is expected to continue on September 3, 1992. It will be held at the offices of the Federal Energy Regulatory Commission, 810 First Street, NE., Washington, DC. The conference will address the July 7, 1992 summary of proposal to comply with Order No. 636 submitted by Florida Gas Transmission Company (Florida Gas), together with any changes in that proposal that Florida Gas may submit before September 2, 1992 or at the time of the conference.

All interested parties are invited to attend. Attendance at the conference, however, will not confer party status. For additional information, interested parties can call Joanne Leveque at (202) 208-5705.

Lois D. Cashell,

Secretary.

[FR Doc. 92-19611 Filed 8-11-92; 8:45 am]

BILLING CODE 6717-01-M

[Docket No. RP92-73-000]

National Fuel Gas Supply Corp.; Informal Settlement Conference

August 12, 1992.

Take notice that an informal settlement conference will be convened in this proceeding commencing at 10 a.m. on Friday, September 11, 1992. The conference will be held at the offices of the Federal Energy Regulatory Commission, 810 First Street NE., Washington, DC, for the purpose of exploring the possible settlement of the above-captioned proceeding.

Any party, as defined by 18 CFR 385.102(c), or any participant as defined in 18 CFR 385.102(b), is invited to attend. Persons wishing to become a party must move to intervene and receive intervenor status pursuant to the Commission's regulations (18 CFR 385.214).

For additional information, contact Joanne Leveque at (202) 208-5705 or Warren Wood at (202) 208-2091.

Lois D. Cashell,

Secretary.

[FR Doc. 92-19613 Filed 8-17-92; 8:45 am]

BILLING CODE 6717-01-M

[Docket No. RS92-10-000]

Southern Natural Gas Co.; Conference

August 12, 1992.

Take notice that on Friday, September 11, 1992, at 9:30 a.m., a conference will be convened in the above-captioned docket to discuss Southern Natural Gas Company's summary of its proposed plan for implementation of Order No. 636.

The conference will be held at the Four Seasons Hotel, Salon A, 2800 Pennsylvania Avenue NW., Washington, DC 20007. All interested parties are invited to attend. Attendance at the conference will not confer party status. For additional information, interested persons can call Barbara Reideler, (202) 208-2015, or Robert J. Szekely at (202) 208-0442.

Lois D. Cashell,

Secretary.

[FR Doc. 92-19612 Filed 8-17-92; 8:45 am]

BILLING CODE 6717-01-M

[Docket No. RP92-48-005]

Viking Gas Transmission Co.; Compliance Filing

August 12, 1992.

Take notice that on August 5, 1992, Viking Gas Transmission Company ("Viking") filed the following tariff sheets to be effective June 1, 1992:

Original Volume No. 1

First Revised Nineteenth Revised Sheet No. 6
Sup. Alternate 19th
Substitute Second Revised Sheet No. 60
Substitute Second Revised Sheet No. 64
Second Substitute Second Revised Sheet No. 65
Substitute Third Revised Sheet No. 81E
Third Substitute Original Sheet No. 97A
Third Substitute Original Sheet No. 97B
Substitute Original Sheet No. 97C

Viking states that the purpose of this filing is to comply with the order issued by the Commission on July 21, 1992 in the above-referenced docket.

Any person desiring to protest said filing should file a protest with the Federal Energy Regulatory Commission, 825 North Capitol Street, NE., Washington, DC 20426, in accordance with rule 211 of the Commission's rules of Practice and procedure 18 CFR 385.211. All such protests should be filed on or before August 19, 1992. Protests will be considered by the Commission in determining the appropriate action to be taken, but will not serve to make protestants parties to the proceeding. Copies of this filing are on file with the Commission and are available for public inspection.

Lois D. Cashell,

Secretary.

[FR Doc. 92-19554 Filed 8-17-92; 8:45 am]

BILLING CODE 6717-01-M

Office of Fossil Energy

[Docket Nos. 92-99-NG, 92-105-NG]

Neste Trading (USA), Inc., Redwood Resources Inc.; Applications for Blanket Authorization To Import and Export Natural Gas

AGENCY: Office of Fossil Energy, DOE.

ACTION: Notice of applications.

SUMMARY: The Office of Fossil Energy (FE) of the Department of Energy (DOE) gives notice that the applications identified in the attached appendix were filed pursuant to section 3 of the Natural Gas Act and DOE Delegation Order Nos. 0204-111 and 0204-127. The applicants request blanket authorization to import or export natural gas from or to Canada or Mexico on a short-term or spot market basis over a period of two years beginning on the date of the first delivery. The proposed imports and exports would take place at any point on the borders of the United States that would not require the construction of new pipeline facilities.

Copies of these applications are available for inspection and copying in the Office of Fuels Programs docket room, 3F-056, at the below address. The docket room is open between the hours of 8 a.m. and 4:30 p.m., Monday through Friday, except Federal holidays. You are invited to submit protests, motions to intervene, notices of intervention, and written comments with respect to any docket listed above.

DATES: Protests, motions to intervene or notices of intervention, as applicable, requests for additional procedures and written comments are to be filed in the specific docket at the address listed below no later than 4:30 p.m., eastern time, September 17, 1992.

ADDRESSES: Office of Fuels Programs, Fossil Energy, U.S. Department of Energy, Forrestal Building, room 3F-056, FE-50, 1000 Independence Avenue SW., Washington, DC 20585.

FOR FURTHER INFORMATION CONTACT: P.J. Fleming, Office of Fuels Programs, Fossil Energy, U.S. Department of Energy, Forrestal Building, room 3F-056, 1000 Independence Avenue SW., Washington, DC 20585, (202) 586-4819.

SUPPLEMENTARY INFORMATION: Notice of these applications is consolidated for administrative reasons, but DOE is conducting separate proceedings and will issue individual decisions on each application. Any protestor, intervenor, commenter, or other respondent who wishes to participate in more than one docket must submit a separate filing in each docket. DOE's decision on applications for import authority will be made consistent with DOE's gas import policy guidelines, under which the competitiveness of an import arrangement in the market served is the primary consideration in determining whether it is in the public interest (49 FR 6684, February 22, 1984). In reviewing natural gas export applications DOE considers domestic need for the gas and any other issue determined to be appropriate, including whether the arrangement is consistent with the DOE policy of promoting competition in the natural gas marketplace by allowing commercial parties to freely negotiate their own trade arrangements. Parties, especially those that may oppose any of these applications, should comment on these issues as they relate to the requested import/export authority. The applicants assert that their proposals are in the public interest. Parties opposing any of these applications bear the burden of overcoming these assertions.

NEPA Compliance

The National Environmental Policy Act (NEPA), 42 U.S.C. 4321 *et seq.*, requires DOE to give appropriate consideration to the environmental effects of its proposed actions. No final decision will be issued in these proceedings until DOE has met its NEPA responsibilities.

Public Comment Procedures

In response to this notice, any person may file a protest, motion to intervene or notice of intervention, as applicable, and written comments. Any person wishing to become a party to a proceeding and to have written comments considered as the basis for any decision on an application must, however, file a motion to intervene or notice of intervention, as applicable. The filing of a protest with respect to an application will not serve to make the protestant a party to that proceeding, although protests and comments received from persons who are not parties will be considered in determining the appropriate action to be taken on an application. The filing of an intervention with respect to a particular docket will not serve to make the person a party in any other docket. All protests, motions to intervene, notices of intervention, and written comments must meet the requirements that are specified by the regulations in 10 CFR part 590. Protests, motions to intervene, notices of intervention, requests for additional procedures, and written comments should be filed to the specific docket with the Office of Fuels Programs at the address listed above.

It is intended that a decisional record on an application will be developed through responses to this notice by parties, including the parties' written comments and replies thereto. Additional procedures will be used as necessary to achieve a complete understanding of the facts and issues. A party seeking intervention may request that additional procedures be provided, such as additional written comments, an oral presentation, a conference, or trial-type hearing. Any request to file additional written comments should explain why they are necessary. Any

request for an oral presentation should identify the substantial question of fact, law, or policy at issue, show that it is material and relevant to a decision in the proceeding, and demonstrate why an oral presentation is needed. Any request for a conference should demonstrate why the conference would materially advance the proceeding. Any request for a trial-type hearing must show that there are factual issues genuinely in dispute that are relevant and material to a decision and that a trial-type hearing is necessary for a full and true disclosure of the facts.

If an additional procedure is scheduled, notice will be provided to all parties. If no party requests additional procedures, a final opinion and order may be issued based on the official record, including the application and responses filed by parties pursuant to this notice, in accordance with 10 CFR 590.316.

Issued in Washington, DC, on August 12, 1992.

Anthony J. Como,

Director, Office of Coal & Electricity, Office of Fuels Programs, Office of Fossil Energy.

APPENDIX

Filing date	Applicant name and docket No.	Two-year maximum		Comments
		Import volume	Export volume	
7/30/92	Neste Trading (USA) Inc. (92-99-NG)		21.9 Bcf [1]	Exports to Canada and Mexico.
8/10/92	Redwood Resources Inc. (92-105-NG)	50.0 Bcf		Imports from Canada.

[1] Combined total of exports.

[FR Doc. 92-19639 Filed 8-17-92; 8:45 am]

BILLING CODE 6450-01-M

ENVIRONMENTAL PROTECTION AGENCY

[FRL-4196-4]

Agency Information Collection Activities Under OMB Review

AGENCY: Environmental Protection Agency (EPA).

ACTION: Notice.

SUMMARY: In compliance with the Paperwork Reduction Act (44 U.S.C. 3501 *et seq.*), this notice announces that the Information Collection Request (ICR), abstracted below, has been forwarded to the Office of Management and Budget (OMB) for review and comment. The ICR describes the nature of the information collection and its expected cost and burden; where appropriate, it includes the actual data collection instrument.

DATES: Comments must be submitted on or before September 17, 1992.

FOR FURTHER INFORMATION OR A COPY OF THIS ICR, CONTACT: Sandy Farmer at EPA, (202) 260-2740.

SUPPLEMENTARY INFORMATION:

Office of Air and Radiation

Title: Amendment to the Information Collection Request Application for Motor Vehicle Emission Certification and Fuel Economy Labeling (OMB No. 2060-0104); Inherently Low-Emission Vehicle Emission Certification and Fuel Economy Labeling: Clean Fuel Fleet Credit Programs, Transportation Control Measure Exemptions, and Related Provisions (ICR No. 783.19).

This ICR requests revision of a currently approved collection.

Abstract: The Clean Air Act (CAA) Amendments of 1990 require that a Clean Fuel Fleet Program be established in certain areas which have significant air pollution problems. A percentage of new vehicles purchased annually by certain fleet owners in these areas must meet clean-fuel fleet vehicle (CFFV) emission standards. CFFVs are to be exempt from certain temporal-based transportation control measures (TCMs). A fleet credit program will also be instituted which will grant CFFV credits to fleet owners who choose to exceed the program's minimum requirements (e.g., by purchasing more CFFVs than required in a given year or by purchasing cleaner vehicles than required). The fleet program is to be established, administered, and enforced by the individual states which contain the air quality areas of concern. One additional aspect of the program, that of inherently low-emission vehicles (ILEVs), will be administered by EPA. Because of their fuel or technology, ILEVs will have no significant evaporative emissions and greatly reduced notrigen oxide (NOx) emissions. ILEVs bought for fleet use in covered areas will be exempt from ordinances which restrict certain traffic lanes to high-occupancy vehicles (HOVs). Participation in the ILEV program is voluntary for fleet owners and vehicle manufacturers.

This supporting statement amends the existing ICR to reflect the new regulations associated with the certification of ILEVs. Any federal information collection burden which may be associated with other aspects of the fleet program will be covered in a later IRC, prepared in conjunction with an upcoming Notice of Proposed Rulemaking on the general provisions of the fleet program.

Burden Statement The public reporting burden for this collection of information is estimated to average 4,100 hours per response, including time for reviewing instructions, gathering and maintaining the data needed, and completing and reviewing the collection of information. This results in an overall program average of 15,092 hours per response.

Respondents: Motor Vehicle Manufacturers.

Estimated Number of Respondents: 86.

Estimated Total Annual Burden on Respondents: 1,417,000 Hours.

Frequency of Collection: Annually.

Send comments regarding the burden estimate, or any other aspect of this information collection, including suggestions for reducing the burden, to:

Sandy Farmer, U.S. Environmental Protection Agency, Information Policy Branch (PM-223Y), 401 M Street SW., Washington, DC 20460,

and

Troy Hillier, Office of Management and Budget, Office of Information and Regulatory Affairs, 725 17th Street NW., Washington, DC 20503.

Dated: August 11, 1992.

Richard D. Wilson,

Director, Office of Mobile Sources.

[FR Doc. 92-19643 Filed 8-17-92; 8:45 am]

BILLING CODE 6560-50-M

[FRL-4195-5]

EPA's Scientific Reassessment of Dioxin

AGENCY: U.S. Environmental Protection Agency (EPA).

ACTION: Notice of upcoming activities regarding EPA's reassesment of dioxin.

SUMMARY: The EPA has scheduled two peer-review workshops to be held in mid-September 1992 to review draft documents on exposure assessment procedures and health assessment issues related to its reassessment of dioxin. These draft documents, authored primarily by outside scientific experts, are, at this stage, very preliminary, developmental, and do not represent Agency policy. The draft documents are being made available in advance of the workshops as part of the Agency's continuing commitment to conduct the reassessment of dioxin in an open and participatory manner, to keep the public informed of its progress, and to encourage public participation in the document development process. The public is invited to attend the workshops, to present oral comments, and/or to submit written comments. Seating will be limited, and advance reservations are suggested. Information about attending the meetings and obtaining copies of the draft documents is provided elsewhere in this notice. After the workshops, external review drafts will be prepared by the Agency and will be released for public review and comment and review by the Agency's Science Advisory Board.

At the first workshop, scheduled for September 10 and 11, 1992, a panel of scientific experts from outside the Agency will review a draft document on procedures for assessing exposure to dioxin titled, Estimating Exposures to Dioxin-Like Compounds (EPA/600/6-88/005B). Information about obtaining copies of this draft document is provided elsewhere in this **Federal Register** notice.

The second workshop, scheduled for September 22 through 25, 1992, will focus on a review of draft chapters that will ultimately be part of a full health assessment of 2, 3, 7, 8-tetrachlorodibenzo-p-dioxin (TCDD) and related compounds. The peer-review panel, a group of scientific experts from outside the Agency, also will discuss and formulate points to be included in a risk characterization chapter, which will be further developed by the Agency following the workshop. Information about obtaining copies of these draft chapters is provided elsewhere in this **Federal Register** notice.

DATES: The peer-review workshop to review the draft document on procedures for assessing exposures to dioxin will be held September 10 and 11, 1992. Copies of the draft document will be available on or about August 10, 1992.

The peer-review workshop to review the draft health assessment chapters will be held September 22 through 25, 1992. Copies of the draft chapters will be available on or about August 24, 1992.

ADDRESSES: Eastern Research Group, Inc. (ERG), an EPA contractor, is providing logistical support for the peer-review workshops. Both meetings will be held at the Sheraton Premiere at Tysons Corner, 8861 Leesburg Pike, Tysons Corner, VA. For additional information, please contact Helen Murray, ERG, at (617) 674-7307 or fax (617) 674-2906. Further, members of the public wishing to present formal statements at either meeting should request a time when making their reservations. Time will be limited in order to give everyone an equal opportunity to speak. Individuals and organizations who are not assigned a time in advance of the workshops will be heard as time permits. In addition, during the meetings some time will be designated for questions and comments from the floor to encourage interactions among authors, peer-panel members, and the other meeting attendees.

Members of the public may also submit written comments and other materials relevant to the scientific reassessment of dioxin to: Eastern Research Group, Inc., 110 Hartwell Avenue, Lexington, MA 02173-3198, Attention: Helen Murray. Comments will be accepted up to 10 working days following each meeting. After that time, written comments should be directed to: Office of Health and Environmental Assessment (RD-689), U.S. Environmental Protection Agency, 401 M Street, SW., Washington, DC 20460, Attention: Dioxin Reassessment.

Members of the public wishing to make a reservation simply to attend one or both of the meetings may phone ERG at (617) 674-7270 to leave their name on ERG's automated registration system. The system is available 24 hours a day.

To obtain a copy of the draft exposure document or any of the draft health assessment chapters, interested parties should contact the ORD Publications Center, CERI-FRN, U.S. Environmental Protection Agency, 26 W. Martin Luther King Drive, Cincinnati, OH 45268; telephone (513) 569-7562; fax (513) 569-7566. Please provide your name, mailing address, and the appropriate document title and number from the list below.

Estimating Exposures to Dioxin-Like Compounds EPA/600/6-88/005B

Health Assessment Chapters:

Chapter 1. Disposition and Pharmacokinetics EPA/600/AP-92/AP-92/001a.

Chapter 2. Mechanisms of Toxic Actions EPA/600/AP-92/001b.

Chapter 3. Acute, Subchronic, and Chronic Toxicity EPA/600/AP-92/001c.

Chapter 4. Immunotoxic Effects EPA/600/AP-92/001d.

Chapter 5. Reproductive and Developmental Toxicity EPA/600/AP-92/001e.

Chapter 6. Carcinogenicity of TCDD in animals EPA/600/AP-92/001f.

Chapter 7. Epidemiology/Human Data EPA/600/AP-92/001g.

Chapter 8. Dose-Response Relationships EPA/600/AP-92/001h.

Once available, the draft documents also will be provided for inspection at the ORD Public Information Shelf, EPA Headquarters Library, 401 M Street, SW., Washington, DC 20460, between the hours of 8:30 a.m. and 4:30 p.m., Monday through Friday, except for Federal holidays, and at all of the EPA Regional and Laboratory libraries.

FOR FURTHER INFORMATION CONTACT: For copies of documents: ORD Publications Center, CERI-FRN, Office of Research and Development, U.S. Environmental Protection Agency, 26 W. Martin Luther King Drive, Cincinnati, OH 45268; telephone (513) 569-7562; fax (513) 569-7566. For questions on exposure: John Schaum, Exposure Assessment Group, Office of Health and Environmental Assessment (RD-689), Office of Research and Development, U.S. Environmental Protection Agency, 401 M Street, SW., Washington, DC 20460; telephone (202) 260-5988; fax (202) 260-1722.

For questions on the health assessment: William Farland, Office of Health and Environmental Assessment (RD-689), Office of Research and Development, U.S. Environmental Protection Agency, 401 M Street, SW., Washington, DC 20460; telephone (202) 260-7315; fax (202) 260-0393.

SUPPLEMENTARY INFORMATION: In April 1991, EPA Administrator William Reilly announced that EPA would conduct a scientific reassessment of the risks of exposure to 2,3,7,8-tetrachlorodibenzo-p-dioxin (TCDD) and chemically similar compounds collectively known as dioxin. The reassessment is part of the Administrator's goals of improving the research and science base of the Agency, and incorporating improved research and science into EPA decisions.

The EPA has undertaken this task in response to emerging scientific knowledge of the biological, human health, and environmental effects of dioxin. Significant advances have

occurred in the scientific understanding of mechanisms of dioxin toxicity, of the carcinogenic and other adverse health effects of dioxin in people, of the pathways to human exposure, and of the toxic effects of dioxin to the environment.

The EPA is making this reassessment of dioxin an open and participatory effort. It has convened two public meetings (on November 15, 1991, and April 28, 1992) to inform the public of the Agency's plans and activities, to hear and receive public comments and reviews of the proposed plans for the reassessment, and receive any current, scientifically relevant information.

The scientific reassessment of dioxin consists of five activities:

1. Development of a biologically based dose-response model for dioxin.
2. Update and revision of the health assessment document for dioxin.
3. Laboratory research in support of the dose-response model.
4. Update and revision of the dioxin exposure assessment document.
5. Research to characterize ecological risks in aquatic ecosystems.

The first three activities will be combined as the reassessment activities result in a revised health assessment. The process for developing the health assessment document consists of three phases:

Phase 1 includes completing state-of-the-science chapters and a dose-response model for the health assessment document and conducting a peer review by a panel of experts. Drafts of the chapters, which ultimately will comprise the Agency's health assessment document for 2,3,7,8-tetrachlorodibenzo-p-dioxin (TCDD) and related compounds, have been completed, and the peer-review workshop is scheduled.

Phase 2, preparation of the risk characterization, will begin during the workshop. The peer-review panel will discuss and formulate points to be carried forward into the risk characterization. Following the workshop, a draft health assessment document will be assembled.

Phase 3 will involve review of the draft health assessment and exposure documents by the EPA's Science Advisory Board (SAB) and the public. These activities will be announced in the **Federal Register** at the appropriate time. Anticipated dates include public review and comment of the two draft documents in late 1992 and completion of Phase 3 in mid-1993.

The fourth activity has been completed. A draft exposure document titled, Estimating Exposures to Dioxin-Like Compounds, will be the subject of a separate peer-review workshop and additional reviews as outlined in the preceding paragraph.

The fifth activity is in progress. EPA's Environmental Research Laboratory in Duluth, Minnesota, is directing the efforts and conducting studies related to characterizing ecological risks in aquatic ecosystems from exposure to dioxins. Research efforts are focused on the study of organisms in aquatic food webs to identify the effects of dioxin exposure that are likely to result in significant population impacts. Both the study results and the risk characterization will undergo peer and SAB review in 1994. Ultimately, these data will support the development of aquatic life criteria which will aid in the implementation of the Clean Water Act.

Dated: August 7, 1992.

Erich W. Bretthauer,

Assistant Administrator for Research and Development.

[FR Doc. 92-19621 Filed 8-17-92; 8:45 am]

BILLING CODE 6560-50-M

[FRL-4195-9]

Virginia: Adequacy Determination of the State's Municipal Solid Waste Permit Program

AGENCY: Environmental Protection Agency (Region III).

ACTION: Notice of tentative determination on application of the Commonwealth of Virginia for adequacy determination, public comment period, and public hearing (if necessary).

SUMMARY: Section 4005(c)(1)(B) of RCRA, as amended by HSWA, requires States to develop and implement permit programs to ensure that Municipal Solid Waste Landfills (MSWLFs) which may receive hazardous household wastes or small quantity generator waste will comply with the revised Federal MSWLF Criteria. Section 4005 (c)(1)(C) requires the EPA Administrator to review these state permit programs to determine if they are adequate to ensure compliance with the Federal Criteria. This authority has been delegated to the Regional Administrator. The EPA has drafted and is in the process of proposing the State/Tribal Implementation Rule (STIR) that allows for States and Tribes to apply for and receive approval of partial permit programs. Adequacy determinations will be made based on the draft STIR and statutory authorities and requirements. Virginia has applied for a determination of adequacy under the Resource Conservation and Recovery Act (RCRA). The Environmental Protection Agency, Region III, has reviewed Virginia's application and has made the tentative decision that Virginia's existing municipal solid waste permit program, along with revisions committed to by the State, in a schedule acceptable to EPA, satisfies all requirements necessary to qualify for a determination of adequacy. Virginia's application is available from EPA Region III and the State for public review and comment. A public hearing will be held to solicit comment and public opinion if sufficient public interest is expressed during the comment period.

DATES: The public hearing, if held, will be in Richmond, Virginia, on October 14, 1992. All comments on Virginia's application for a determination of adequacy must be received at EPA Region III by the close of business on October 14, 1992.

ADDRESSES: Copies of Virginia's application for adequacy determination are available from 9 a.m. to 4 p.m. during normal working days at the following addresses for inspection and copying: Virginia Department of Waste Management, 101 North 14th Street, Richmond, Virginia, 23219, Attn: Mr. Michael Murphy; and U.S. EPA Region III, 841 Chestnut Street, Philadelphia, Pennsylvania, 19107; Attn: Mr. Andrew Uricheck, mailcode 3HW53. Written comments should be sent to the EPA Region III office.

FOR FURTHER INFORMATION CONTACT: EPA Region III, 841 Chestnut Street, Philadelphia, Pennsylvania, 19107, Attn: Mr. Andrew Uricheck, mailcode 3HW53, telephone 215-597-7936.

SUPPLEMENTARY INFORMATION:

A. Background

On October 9, 1991, EPA promulgated revised Criteria for MSWLFs (40 CFR Part 258). Subtitle D of RCRA, as amended by the Hazardous and Solid Waste Amendments of 1984 (HSWA), requires States to develop permitting programs to ensure that MSWLFs comply with the Federal Criteria under Part 258. Section 4005 of Subtitle D also requires that EPA determine the adequacy of State municipal solid waste landfill permit programs to ensure that facilities comply with the revised Federal Criteria. To define State application procedures and the EPA review process, the Agency has drafted and is currently in the process of proposing the State/Tribal Implementation Rule (STIR). This rule specifies the requirements that State and Tribal programs must satisfy to be determined adequate to ensure

compliance with Part 258. It also provides for partial program approval if the State can demonstrate that limited and discrete State requirements must be revised to comply with Part 258. Partial approval would allow the Agency to approve those provisions of the State permit program that meet the requirements and provide the State time to make necessary changes to the remaining portions of its program. As a result, owners/operators will be able to work with the State permitting agency to take advantage of the Criteria's flexibility for those portions of the program which have been approved. Under this procedure, those portions of the Federal Criteria which were not included in the approval would remain in effect, or become effective, and apply directly to the owner/operator. The application must address the authorities and provide a narrative discussion of the structure of the State program that includes a summary of State technical requirements that demonstrate technical comparability with the Federal revised Criteria. The STIR also includes procedures EPA and its Regional Offices should follow in reviewing and determining the adequacy of State permitting programs for MSWLFs.

B. Commonwealth of Virginia

On May 29, 1992, Virginia's application for adequacy determination was received by EPA Region III. EPA has reviewed Virginia's application and has tentatively determined that the State's program, including future revisions committed to by the State, meets all requirements necessary to qualify for a determination of partial approval of adequacy to ensure compliance with the Federal Criteria. Upon completion of the committed revisions to the State's municipal solid waste landfill liner design requirements and their financial assurance requirements as described in its application, the State will submit an amended application to EPA Region III to obtain full approval. Virginia has provided a schedule in their application which indicates that all proposed regulatory revisions, except for those pertaining to financial assurance requirements, will be adopted and effective by January 1993. The financial assurance requirements will be adopted by December 1993.

This partial approval determination is based on the State's commitment to revise its existing liner and financial assurance requirements, and shall automatically expire on October 9, 1995, as suggested in STIR. The State's program will automatically be determined to be inadequate if the proposed revisions have not been made by that time.

In addition to the two major changes required to be made to the Virginia program noted above, the State in its application, proposed numerous other changes to existing regulations to more exactly comply with the requirements of 40 CFR part 258. After these proposed revisions are made, the Virginia municipal solid waste permitting regulations will be virtually identical to the recently issued Federal Criteria.

The major revision to the existing State landfill liner requirement will be the adoption of the composite landfill liner as described in 40 CFR 258.40 as the minimum acceptable liner design. A composite liner consists of two components, the upper component being a flexible membrane liner installed in direct and uniform contact with the lower component of at least two feet of extremely low hydraulic conductivity compacted soil.

The major revision to the existing State financial assurance statutes and regulations is that their applicability will be extended to public landfill owners and operators. They are currently exempt from these requirements.

EPA will consider all public comments received on its tentative determination through October 14, 1992, by letter and at the public hearing on October 14, 1992, if held. Persons requesting that EPA hold a public hearing and/or wishing to be notified of the specific time and location of the hearing, if held, should contact the EPA Region III office no later than September 25, 1992.

EPA will publish its final determination in the **Federal Register**.

Compliance With Executive Order 12291

The Office of Management and Budget has exempted this rule from the requirements of Section 3 of Executive Order 12291.

Certification Under the Regulatory Flexibility Act

40 CFR 258, which this action implements, has fulfilled the requirements of the Regulatory Flexibility Act.

Authority: This notice is issued under the authority of section 4005 of the Solid Waste Disposal Act as amended.

Dated: August 11, 1992.

Edwin B. Erickson,

Regional Administrator.

[FR Doc. 92-19641 Filed 8-17-92; 8:45 am]

BILLING CODE 6560-50-M

[OPPTS-59948; FRL 4160-9]

Certain Chemicals; Premanufacture Notices

AGENCY: Environmental Protection Agency (EPA).

ACTION: Notice.

SUMMARY: Section 5(a)(1) of the Toxic Substances Control Act (TSCA) requires any person who intends to manufacture or import a new chemical substance to submit a premanufacture notice (PMN) to EPA at least 90 days before manufacture or import commences. Statutory requirements for section 5(a)(1) premanufacture notices are discussed in the final rule published in the **Federal Register** of May 13, 1983 (48 FR 21722). In the **Federal Register** of November 11, 1984, (49 FR 46066) (40 CFR 723.250), EPA published a rule which granted a limited exemption from certain PMN requirements for certain types of polymers. Notices for such polymers are reviewed by EPA within 21 days of receipt. This notice announces receipt of 7 such PMN(s) and provides a summary of each.

DATES: Close of review periods:

Y 92-177, August 18, 1992.
Y 92-178, August 20, 1992.
Y 92-179, August 23, 1992.
Y 92-180, 92-181, August 20, 1992.
Y 92-182, August 24, 1992.
Y 92-183, August 25, 1992.

FOR FURTHER INFORMATION CONTACT: Susan B. Hazen, Director, Environmental Assistance Division (TS-799), Office of Pollution Prevention and Toxics, Environmental Protection Agency, Rm. E-545, 401 M St., SW., Washington, DC, 20460, (202) 554-1404, TDD (202) 554-0551.

SUPPLEMENTARY INFORMATION: The following notice contains information extracted from the nonconfidential version of the submission provided by the manufacturer on the PMNs received by EPA. The complete nonconfidential document is available in the TSCA Public Docket Office, NE-G004 at the above address between 8 a.m. and noon and 1 p.m. and 4 p.m., Monday through Friday, excluding legal holidays.

Y 92-177

Manufacturer. Reichhold Chemicals, Inc.

Chemical. (G) Alkyd resin.

Use/Production. (S) Industrial coatings. Prod. range: Confidential.

Y 92-178

Manufacturer. Confidential.

Chemical. (G) Acrylic copolymer solution.

Use/Production. (G) Paint vehicle. Prod. range: Confidential.

Y 92-179

Manufacturer. Confidential.
Chemical. (G) Styrene-acrylic polymer, sodium salts.
Use/Production. (G) Printing ink and coatings vehicle. Prod. range: Confidential.

Y 92-180

Importer. Confidential.
Chemical. (G) Fatty acid polyester.
Use/Import. (G) Printing ink. Import range: Confidential.

Y 92-181

Manufacturer. Eastman Chemical Program.
Chemical. (G) Aliphatic polyester.
Use/Production. (G) Coating intermediate. Prod. range: Confidential.

Y 92-182

Manufacturer. Confidential.
Chemical. (G) Aliphatic polyurethane.
Use/Production. (G) Coatings. Prod. range: Confidential.

Y 92-183

Manufacturer. Henkel Corporation.
Chemical. (G) Polyester.
Use/Production. (S) Plasticizer for polyvinyl chloride resin. Prod. range: 100,000-150,000 kg/yr.

Dated: August 12, 1992.

Steven Newburg-Rinn,

Acting Director, Information Management Division, Office of Pollution Prevention and Toxics.

[FR Doc. 92-19650 Filed 8-17-92; 8:45 am]

BILLING CODE 6560-50-F

[AMS-FRL-4196-1]

Transportation and Air Quality Planning Guidelines; Availability

AGENCY: Environmental Protection Agency (EPA).

ACTION: Notice of availability.

SUMMARY: This action is announcing the availability of a guidance document regarding the transportation and air quality planning process. This guidance is intended to provide State and local governments with an overview of the transportation/air quality provisions of the CAAA of 1990. This action is published in response to the requirements of Section 108(e) of the CAAA of 1990.

DATES: The guidance document will be available August 18, 1992.

ADDRESSES: The documents are available to federal, State, and local governmental Agencies and may be requested from Ms. Norma Gray, Emission Control Strategies Branch, U.S. EPA National Vehicle and Fuel Emissions Laboratory, 2565 Plymouth Road, Ann Arbor, Michigan 48105. Telephone: (313)-741-7884. Facsimile: 313-668-4368. It is suggested that request be made by facsimile. Copies of the document will be available for public viewing in the National Vehicle and Fuel Emissions Laboratory Library, at the same address. The document will be available to non-governmental requestors through the National Technical Information Service (NTIS), 5285 Port Royal Road, Springfield, Virginia 22161. Telephone: (703)-487-4650. Request Document PB 92-201458.

FOR FURTHER INFORMATION CONTACT: Mr. Richard L. Williams II, Emission Control Strategies Branch, U.S. EPA National Vehicles and Fuels Emission Laboratory, 2565 Plymouth Road, Ann Arbor, Michigan 48105. Telephone: (313) 668-4419. Facsimile: 313-668-4368.

SUPPLEMENTARY INFORMATION: Section 108(e) of the Clean Air Act Amendments (CAAA) of 1990 directs the Administrator of the EPA to update the 1978 Transportation-Air Quality Planning Guidelines and publish guidance on the development and implementation of transportation and other measures necessary to demonstrate and maintain attainment of national ambient air quality standards. This document is designed to assist State and local government officials in planning for transportation-related emissions reductions that will contribute to the attainment and maintenance of the NAAQS. It has been prepared in consultation with the Department of Transportation. Public comment was solicited in a Notice of Availability, published in the **Federal Register** on September 4, 1991 at (56 FR 43758).

This Guidelines document provides an overview of the air quality planning process, the transportation planning process and the ways in which they overlap in light of the CAAA. An overview is also provided of the transportation-related provisions of the CAAA. Considerations in the planning process are addressed. These include: planning procedures as required by Section 174; consideration for developing inventory and vehicle miles traveled data; consideration for developing transportation control measures; considerations for addressing PM-10; Conformity; funding; and public participation. Examples of State actions concerning planning procedures are also included.

Dated: August 10, 1992.

Michael Shapiro,

Assistant Administrator, Office of Air and Radiation.

[FR Doc. 92-19644 Filed 8-17-92; 8:45 am]

BILLING CODE 6560-50-M

[FRL-4195-8]

Revision of the Iowa National Pollutant Discharge Elimination System (NPDES) Program To Authorize the Issuance of General Permits

AGENCY: Environmental Protection Agency (EPA).

ACTION: Notice of approval of the national pollutant discharge elimination system general permits program of the State of Iowa.

SUMMARY: On August 4, 1992, the Regional Administrator for the Environmental Protection Agency (EPA), Region 7, approved the State of Iowa's National Pollutant Discharge Elimination System (NPDES) General Permits. This action authorizes the State of Iowa to issue general permits in lieu of individual NPDES permits.

FOR FURTHER INFORMATION CONTACT: Donald C. Toensing, Chief, Permits/Compliance Section, Water Compliance Branch, U.S. Environmental Protection Agency, Region 7, 726 Minnesota Avenue, Kansas City, KS 66101, 913-551-7034.

SUPPLEMENTARY INFORMATION:

I. Background

EPA regulations at 40 CFR 122.28 provide for the issuance of general permits to regulate discharges of wastewater which result from substantially similar operations, contain the same types of wastes, require the same effluent limitations or operating conditions, require similar monitoring, and are appropriately controlled under a general permit rather than individual permits.

Iowa was authorized to administer the NPDES Permit program in 1978. As previously approved, the State's program did not include provisions for the issuance of general permits. There are several categories of discharges which could appropriately be regulated by general permits in Iowa, including storm water. Therefore, the Iowa Department of Natural Resources requested a revision of its NPDES program to provide for issuance of general permits.

Each general permit will be subject to EPA review as provided by 40 CFR 123.44. Public notice and opportunity to

request a hearing is also provided for each general permit.

II. Discussion

The State of Iowa submitted, in support of its request, a Program Description and revised NPDES Memorandum of Agreement between EPA and the State, as well as copies of relevant statutes and regulations. The State also submitted a statement by the Attorney General certifying, with appropriate citations to the statutes and regulations, that the State has adequate legal authority to administer a general permit program consistent with the applicable federal regulations. Based upon Iowa's submission and its experience in administering an approved NPDES program, EPA has concluded that the State will have the necessary approved procedures and resources to administer the general permits program.

Under 40 CFR 123.62, NPDES program revisions are either substantial (requiring publication of proposed program approval in the **Federal Register** for public comment) or non-substantial (where approval may be granted by letter from EPA to the State). EPA has determined that assumption by Iowa of general permit authority is a non-substantial revision of its NPDES program. EPA has generally viewed approval of such authority as non-substantial because it does not alter the substantive obligations of any discharger under the State program, but merely simplifies the procedures by which permits are issued to a number of similar point sources.

Moreover, under the approved program, the State retains authority to issue individual permits where appropriate, and any person may request the State to issue an individual permit to a discharger otherwise eligible for general permit coverage. While not required under 40 CFR 123.62, EPA is publishing notice of this approval action to keep the public informed of the status of its general permits program approvals.

III. Federal Register Notice of Approval of State NPDES Program or Modifications

The following table provides the public with an up-to-date list of the status of State NPDES permitting authority throughout the country. Today's **Federal Register** notice is to announce the approval of Iowa's authority to issue general permits.

STATE NPDES PROGRAM STATUS

	Approved State NPDES permit program	Approved to regulate Federal facilities	Approved State pretreatment program	Approved general permit program
Alabama	10/19/79	10/19/79	10/19/79	06/26/91
Arkansas	11/01/86	11/01/86	11/01/86	11/01/86
California	05/14/73	05/05/78	09/22/89	09/22/89
Colorado	03/27/75			03/04/83
Connecticut	09/26/73	01/09/89	06/03/81	03/10/92
Delaware	04/01/74			
Georgia	06/28/74	12/08/80	03/12/81	01/28/91
Hawaii	11/28/74	06/01/79	08/12/83	09/30/91
Illinois	10/23/77	09/20/79		01/04/84
Indiana	01/01/75	12/09/78		04/02/91
Iowa	08/10/78	08/10/78	06/03/81	08/04/92
Kansas	06/28/74	08/28/85		
Kentucky	09/30/83	09/30/83	09/30/83	09/30/83
Maryland	09/05/74	11/10/87	09/30/85	09/30/91
Michigan	10/17/73	12/09/78	06/07/83	
Minnesota	06/30/74	12/09/78	07/16/79	12/15/87
Mississippi	05/01/74	01/28/83	05/13/82	09/27/91
Missouri	10/30/74	06/26/79	06/03/81	12/12/85
Montana	06/10/74	06/23/81		04/29/83
Nebraska	06/12/74	11/02/79	09/07/84	07/20/89
Nevada	09/19/75	08/31/78		07/27/92
New Jersey	04/13/82	04/13/82	04/13/82	04/13/82
New York	10/28/75	06/13/80		
North Carolina	10/19/75	09/28/84	06/14/82	09/06/91
North Dakota	06/13/75	01/22/90		01/22/90
Ohio	03/11/74	01/28/83	07/27/83	
Oregon	09/26/73	03/02/79	03/12/81	02/23/82
Pennsylvania	06/30/78	06/30/78		08/02/91
Rhode Island	09/17/84	09/17/84	09/17/84	09/17/84
South Carolina	06/10/75	09/26/80	04/09/82	
Tennessee	12/28/77	09/30/86	08/10/83	04/18/91
Utah	07/07/87	07/07/87	07/07/87	07/07/87
Vermont	03/11/74		03/16/82	
Virgin Islands	06/30/76			
Virginia	03/31/75	02/09/82	04/14/89	05/20/91
Washington	11/14/73		09/30/86	09/26/89
West Virginia	05/10/82	05/10/82	05/10/82	05/10/82
Wisconsin	02/04/74	11/26/79	12/24/80	12/19/86
Wyoming	01/30/75	05/18/81		09/24/91
Totals	39	34	27	31

Number of Fully Authorized (Federal Facilities, Pretreatment, General permit) = 22.

IV. Review Under Executive Order 12291 and the Regulatory Flexibility Act

The Office of Management and Budget has exempted this rule from the review requirements of Executive Order 12291 pursuant to section 8(b) of that Order.

Under the Regulatory Flexibility Act, EPA is required to prepare a Regulatory Flexibility Analysis for all rules which may have a significant impact on a substantial number of small entities. Pursuant to section 605(d) of the Regulatory Flexibility Act (5 U.S.C. 601 et seq), I certify that this State General Permit Program will not have a significant impact on a substantial number of small entities. Approval of the Iowa NPDES State General Permit Program establishes no new substantive requirements, nor does it alter the regulatory control over any industrial category. Approval of the Iowa NPDES State General Permit Program merely provides a simplified administrative process.

Dated: August 7, 1992.

Morris Kay,

Regional Administrator, Region 7.

[FR Doc. 92-19642 Filed 8-17-92; 8:45 am]

BILLING CODE 6560-50-M

FEDERAL COMMUNICATIONS COMMISSION

Public Information Collection Requirement Submitted to Office of Management and Budget for Review

August 10, 1992.

The Federal Communications Commission has submitted the following information collection requirement to OMB for review and clearance under the Paperwork Reduction Act of 1980 (44 U.S.C. 3507).

Copies of this submission may be purchased from the Commission's copy contractor, Downtown Copy Center, 1990 M Street, NW., suite 640, Washingon, DC 20036, (202) 452-1422. For further information on this submission contact Judy Boley, Federal Communications Commission, (202) 632-7513. Persons wishing to comment on this information collection should contact Jonas Neihardt, Office of Management and Budget, room 3235 NEOB, Washington, DC 20503, (202) 395-4814

OMB Number: 3060-0072

Title: Application fo.· Individual Airborne Mobile Radio Telephone License in the Public Mobile Radio Service.

Form Number: FCC Form 409.

Action: Extension of a currently approved collection.

Respondents: Businesses or other for-profit (including small businesses).

Frequency of Response: On occasion reporting.

Estimated Annual Burden: 3.000 responses; .084 hours average burden per response; 252 hours total annual burden.

Needs and Uses: FCC Form 409 reporting requirement is necessary for the Commission to fulfill its regulatory responsibilities under the Communications Act of 1934, as amended. The FCC Form 409 is used in applying for authority to operate an airborne mobile radio telephone by individual users who intend to become subscribers to a common carrier service. The form is also used for the modification and renewal of such licenses. FCC 409 is required by 47 CFR part 22. The applicant may be subject to requirements in addition to those specified on the form. Section 22.15(i)(3) requires applicants to include an affirmative representation that he/she has made definite arrangements with a wireline common carrier for service and billing. The data is used by FCC staff to determine the qualifications of the applicant.

Federal Communications Commission.

William F. Caton,

Acting Secretary.

[FR Doc. 92-19566 Filed 8-17-92; 8:45 am]

BILLING CODE 6712-01-M

[General Docket No. 91-2; DA 92-1084]

Information on Application Filing Procedures for the Interactive Video and Data Service

Released: August 14, 1992.

On January 16, 1992, the Commission adopted a Report and Order (R&O) in GEN Docket No. 91-2 establishing an Interactive Video and Data Service (IVDS) under part 95 of its Rules (47 CFR part 95). In the R&O the Commission stated that it would announce by Public Notice the date on which it would begin accepting applications for IVDS system licenses as well as other pertinent information concerning licensing IVDS systems. The purpose of this Public Notice is to establish an IVDS application filing window and explain the filing procedures necessary for filing applications for an IVDS system license in service areas #6 (Boston, MA), #7 (San Francisco, CA), #8 (Washington, DC), #9 (Dallas, TX), and #10 (Houston, TX). For a description of the service areas see the Commission's January 24, 1992, Public Notice, Report No. 92-40.

Applications for an IVDS license for these five service areas must be received at the official filing location listed herein during the three-day filing period beginning September 15, 1992, and ending September 17, 1992. Applications received before September 15, or after September 17, 1992, will be dismissed as untimely filed. The back-up filing procedure and the extra day policy do not apply to IVDS applications.[1]

Note: Applicants may have an interest in only one application in each service area.

All applications must be filed on FCC Form 155 (a separate application is required for each service area) and each application must be accompanied by a separate check made out to the Federal Communications Commission or FCC in the amount of $1,400.00. Failed payment or postdated checks will result in the application being dismissed with prejudice. In section I of Form 155, the "Applicant Name" block must include the applicant's name (either typed or printed) followed by the signature (original) of an individual authorized to sign the application. The mailing address should be addressed to which the applicant wishes official correspondence sent. The number of the service area being applied for (either "006", "007", "008", "009", or "010") must be specified in the box labeled "Call Sign". The fee type code entered in Column (A) must be "PAI", the fee multiple in Column (B) must be "40", and the fee due in column (C) must be $1,400.00. Each individual application (Form 155) and accompanying check ($1,400.00) must be in an individual sealed envelope and properly addressed (see mail in address). Multiple applications, properly packaged, may be delivered in one larger, properly addressed container.

The Commission's official filing location for these applications is Mellon Bank in Pittsburgh, Pa. Applications may be delivered to Mellon Bank in one of two ways, either mailed in or walked in.

[1] The back-up filing procedure enables certain applicants to file late if they follow certain procedures and if their applications are lost or delayed in transit to Pittsburgh, Pennsylvania. The extra day policy allows certain applicants to file one day after the filing deadline. These policies, however, only apply to time critical, feeable applications previously filed in Washington, D.C. and IVDS applications, which are new, have never been filed in Washington. Thus, if an IVDS application is received in Pittsburgh on September 18, 1992, the day after the filing window closes, or thereafter (regardless of the reason for delay), the application will be dismissed as untimely filed.

Mail-Ins

Filings mailed in must be mailed to:

Federal Communications Commission, Interactive Video and Data Service, P.O. Box 358365, Pittsburgh, PA 15251-5365 (This address must be used on the individually sealed envelopes.)

Walk-Ins

Pursuant to provision of 47 CFR 0.401(b)(2), applications may be hand-delivered. Applications hand-delivered must be in a sealed envelope with the mail-in address specified above on its face. A separate envelope is needed for each application and accompanying check. Hand-delivered applications must be deliverd to One Mellon Bank Center, 500 Grant Street, Pittsburgh, PA. 15258 anytime between 12:01 a.m. September 25, 1992, and 11:59 p.m. September 17, 1992.

The street entrance to the Window Filing location is on the Grant Street side of the building (across from the US Air ticket office). Signs will be posted in both One Mellon Bank Center and Three Mellon Bank Center indicating the Filing Window location. The "deliverer" should proceed directly to the street entrance described above and identify himself (herself) as having applications for the IVDS filing window. If a copy is proferred for stamping, one receipt only will be date stamped per application and returned.

Caution: The filing instructions incorporated in this Public Notice are only in effect for the purposes stated herein. These procedures override any other procedures that may be set forth in the Commission's Rules. Failure to follow the filing procedures specified herein will render an application unacceptable for filing. Such an application will be dismissed with prejudice.

After the filing window has closed the Commission will issue a Public Notice as soon as feasible listing the applications filed for these five service areas. In the event the Commission receives more than two acceptable applications for an IVDS system license for any of the service areas, all the applications for that particular service area will be considered mutually exclusive. The Commission will use a lottery conducted in accordance with 47 CFR 1.972 to choose among mutually exclusive applications. If a lottery is necessary, the Commission will announce by Public Notices: (1) When a lottery will be held and (2) the lottery winners (tentative selectees). Tentative selectees will then have two business days from the date of the Public Notice announcing the winners to file a FCC Form 574 (plus required showings) amending their original application. The burden will be on the tentative selectees to provide all necessary information. If for some reason one or both of the tentative selectees' applications in a service area are dismissed, the Commission will open another filing window for that service area.

While the Commission intends to open all 734 service areas as quickly as possible, it will not issue system licenses until the first IVDS transmitter has been type accepted for operation in this service. Moreover, it is important to remember that an applicant that has been awarded an IVDS system license must meet certain construction benchmarks or automatically lose the license. Further an IVDS system licensee is prohibited from transferring the license until the 5-year construction benchmark has been met.

For further information contact Consumer Assistance Branch, 717-337-1212.

Federal Communications Commission.

William F. Catch,

Assistant Secretary.

[FR Doc. 92-19785 Filed 8-17-92; 8:45 am]

BILLING CODE 6712-01-M

[DA 92-1095]

Comments Invited on Georgia Public Safety Plan

August 11, 1992.

The Commission has received the public safety radio communications plan for Georgia (Region 10).

In accordance with the Commission's Memorandum Opinion and Order in General Docket 87-112, Region 10 consists of the State of Georgia (General Docket No. 87-112, 3 FCC Rcd 2113 (1988)).

In accordance with the Commission's Report and Order in General Docket No. 87-112 implementing the Public Safety National Plan, interested parties may file comments on or before September 17, 1992 and reply comments on or before October 2, 1992. (See Report and Order, General Docket No. 87-112, 3 FCC Rcd 905 (1987), at paragraph 54.)

Commenters should send an original and five copies of comments to the Secretary, Federal Communications Commission, Washington, DC 20554 and should clearly identify them as submissions to PR Docket 92-189 Georgia-Public Safety Region 10.

Questions regarding this public notice may be directed to Betty Woolford, Private Radio Bureau, (202) 632-6497 or Ray LaForge, Office of Engineering and Technology, (202) 653-8112.

Federal Communications Commission.

William F. Caton,

Acting Secretary.

[FR Doc. 92-19565 Filed 8-17-92; 8:45 am]

BILLING CODE 6712-01-M

[Report No. 1902]

Petitions for Reconsideration of Actions in Rule Making Proceedings

August 12, 1992.

Petitions for reconsideration have been filed in the Commission rule making proceedings listed in this Public Notice and published pursuant to 47 CFR 1.429(e). The full text of these documents are available for viewing and copying in room 239, 1919 M Street, NW., Washington, DC, or may be purchased from the Commission's copy contractor Downtown Copy Center (202) 452-1422. Oppositions to these petitions must be filed September 2, 1992. § 1.4(b)(1) of the Commission's rules (47 CFR 1.4(b)(1)). Replies to an opposition must be filed within 10 days after the time for filing oppositions has expired.

SUBJECT: Amendment of § 73.202(b) Table of Allotments, FM Broadcast Stations. (St. Augustine, St. Augustine Beach, and Gainesville, Florida) (MM Docket No. 90-164, RM Nos. 6814, 6926, 7706, 7707) Number of Petitions Filed: 1.

SUBJECT: Amendment of § 73.202(b) Table of Allotments, FM Broadcast Stations. (Inglis, Florida) (MM Docket No. 92-11, RM No. 7881) Number of Petitions Filed: 1.

Federal Communications Commission.

William F. Caton,

Acting Secretary.

[FR Doc. 92-19567 Filed 8-17-92; 8:45 am]

BILLING CODE 6712-01-M

DEPARTMENT OF HEALTH AND HUMAN SERVICES

Administration for Children and Families

Agency Information Collection Under OMB Review

AGENCY: Administration for Children and Families Administration on Children, Youth, and Families Head Start Bureau, HHS.

ACTION: Notice. Under the provisions of the Paperwork Reduction Act (44 U.S.C. chapter 35), we have submitted to the Office of Management and Budget (OMB) for approval of information collection requirements contained in a new regulation at 45 CFR part 1305 governing which children will be served

by the Head Start program. The new information collection requirements entitled "Final rule 45 CFR part 1305—Eligibility, Recruitment, Selection, Enrollment and Attendance in Head Start" is submitted by the Head Start Bureau of the Administration for Children and Families.

ADDRESSES: Copies of the information collection request may be obtained from Steve Smith, Office of Information Systems Management, by calling (202) 401-9235.

Written comments and questions regarding the requested approval for information collection should be sent directly to: Kristina Emanuels, OMB Desk Officer for ACF, OMB Reports Management Branch, New Executive Office Building, room 3002, 725 17th Street, NW., Washington, DC 20503 (202) 395-7316.

Information on Document

Title: Final Rule 45 CFR Part 1305—Eligibility, Recruitment, Selection, Enrollment, and Attendance in Head Start.

OMB No.: New Request.

Description: The Head Start Bureau of the Administration for Children, Youth and Families of the Administration for Children and Families has promulgated a new 45 CFR part 1305, Eligibility, Recruitment, Selection, Enrollment and Attendance in Head Start which governs eligibility requirements and limitations for enrollment of children in Head Start. The final regulations contain specific categories of information collection requirements that are integral to the formulation of an effective community needs assessment. These data are readily available in the community from sources such as census data, the United Way and community action agencies as well as from grantee records.

Each grantee must identify its proposed service area in its Head Start grant application and define it by county or Sub-county area. Each grantee must also develop a community needs assessment within its service area once every three years.

The community needs assessment must, among other things, include the collection and analysis of the following information about the grantee's Head Start service area:

—The demographic make-up of Head Start eligible children and families, including their estimated number, geographic location, and racial and ethnic composition;

—Other child development and child care programs that are serving Head Start eligible children, and the approximate number of Head Start eligible children served by each;

—The estimated number of children with disabilities four years old or younger, including types of disabilities and relevant services and resources provided to these children by community agencies; (see section 1305.3)

Annual Number of Recordkeepers: 447.

Annual Hours per Recordkeeper: 40.

Total Recordkeeping Hours: 17,880.

Dated: August 2, 1992.

Naomi B. Marr,

Director, Office of Information Systems Management.

[FR Doc. 92-19547 Filed 8-17-92; 8:45 am]

BILLING CODE 4130-01-M

Alcohol, Drug Abuse, and Mental Health Administration

National Institute on Alcohol Abuse and Alcoholism; Meeting

Pursuant to Public Law 92-463, notice is hereby given of the meeting of the National Advisory Council on Alcohol Abuse and Alcoholism for September 1992.

The Council will be performing review of applications for Federal assistance; therefore, a portion of this meeting will be closed to the public as determined by the Acting Administrator, ADAMHA, in accordance with 5 U.S.C. 552b(c)(6), 5 U.S.C. app. 2 10(d).

A summary of the meeting and roster of the committee members may be obtained from: Ms. Diana Widner, NIAAA Committee Management Officer, Alcohol, Drug Abuse, and Mental Health Administration, Parklawn Building, room 16C-20, 5600 Fishers Lane, Rockville, MD 20857 (Telephone: 301/443-4375).

Substantive program information may be obtained from the contact whose name, room number, and telephone number is listed below.

Committee Name: National Advisory Council on Alcohol Abuse and Alcoholism.

Meeting Date: September 17-18, 1992.

Place: Bethesda Marriott Hotel, 5151 Pooks Hill Road, Bethesda, Maryland 20814.

Open: September 17, 9 a.m.—3 p.m.

Closed: September 17, 3 p.m.—adjournment, September 18, 9 a.m.—adjournment.

Contact: Mr. James F. Vaughan, Room 16C-20, Parklawn Building, Telephone (301) 443-4375.

Dated: August 12, 1992.

Peggy W. Cockrill,

Committee Management Officer, Alcohol, Drug Abuse, and Mental Health Administration.

[FR Doc. 92-19618 Filed 8-17-92; 8:45 am]

BILLING CODE 4160-20-M

Office for Substance Abuse Prevention; Meeting

Pursuant to Public Law 92-463, notice is hereby given of the meeting of the National Advisory Committee on Substance Abuse Prevention of the Office for Substance Abuse Prevention for September 1992.

The National Advisory Committee on Substance Abuse Prevention will be performing review of applications for Federal assistance; therefore, a portion of this meeting will be closed to the public as determined by the Acting Administrator, ADAMHA, in accordance with 5 U.S.C. 552b(c)(6) and 5 U.S.C. app. 2 10(d).

A summary of the meeting and roster of committee members may be obtained from: Ms. D. Herman, OSAP Committee Management Officer, Alcohol, Drug Abuse, and Mental Health Administration, Rockwall II Building, suite 630, 5600 Fishers Lane, Rockville, MD 20857 (Telephone: 301-443-4783). Substantive program information may be obtained from the contact whose name, room number, and telephone number is listed below.

Committee Name: National Advisory Committee on Substance Abuse Prevention.

Meeting Date(s): September 17-18, 1992.

Place: Marriott Residence Inn, 7335 Wisconsin Avenue, Bethesda, Maryland 20814.

Open: September 17, 9:30 a.m.-12:30 p.m., September 18, 9 a.m.-3 p.m.

Closed: Otherwise.

Contact: Yuth Nimit, Ph.D., Rockwall II Building, room 630, Telephone (301) 443-4783.

Dated: August 12, 1992.

Peggy W. Cockrill,

Committee Management Officer, Alcohol, Drug Abuse, and Mental Health Administration.

[FR Doc. 92-19619 Filed 8-17-92; 8:45 am]

BILLING CODE 4160-20-M

Health Resources and Services Administration

Final Funding Preferences for New and Expanded Community and Migrant Health Centers

AGENCY: Health Resources and Services Administration, HHS.

ACTION: Final funding preferences.

SUMMARY: The Health Resources and Services Administration announces final funding preferences for new starts and new area expansion activities under sections 330 and 329 of the Public Health Service (PHS) Act for Community and Migrant Health Centers (C/MHC) and for related major capital improvements up to $200,000.

Proposed funding preferences were published for public comment in the **Federal Register** on April 10, 1992 at 57 FR 12503. Two comments were received during the 30 day comment period.

COMMENT AND RESPONSES: The notice gives preferential consideration for the award of new or expansion grants to areas which are not included in the service areas of existing sections 330 or 329 projects. Two respondents commented on this funding preference. One respondent commented that it would be more cost effective to expand the provision of services in areas with existing CHCs, utilizing their pre-existing administrative and support structures.

Another respondent commented that this funding preference would limit access of Asian Pacific Americans who are not able to receive care within the service areas of existing section 330 grantees because of linguistic and cultural barriers.

Regarding the respondent's comment about the health care needs of Asian Pacific Americans or other unique populations, the Secretary has, in former years, funded grants for centers to provide care to specific populations and may continue to fund programs to provide access for services to such populations as the need is demonstrated. The Secretary is also placing emphasis on required translation services to improve provision of services to persons of limited English speaking ability.

With regard to the respondent's comment about the expansion of services through existing grantees, the Secretary recognizes the importance of seeking a balance between using available funds to strengthen existing centers and using funds to establish new service delivery points. However, it is both congressional intent and the Administration's policy for this fiscal year to target new funds toward increasing access to care in areas not currently served.

Considering the many areas without capacity to provide primary care services, the C/MHC success in developing a network of providers, and the C/MHC interrelationships with other State and local providers, the Secretary believes that the most effective way to meet the health care needs of the largest number of underserved persons is to continue to fund the expansion of services into new areas. In addition, the regulations governing the programs under sections 330 and 329 contain provisions which limit the Secretary in making grant awards where the service area of a center/project overlaps the service area of another center/project funded under these sections. For the reasons described above, the Secretary has concluded that no action should be taken to modify the funding preference addressed in these comments.

One respondent commented that the criteria for evaluation of all grant applications are inequitable when applied to small and/or rural States which have continuing health care needs but not the high need indices published in the notice.

The Secretary wishes to point out that this comment relates to the application evaluation criteria which are not subject to comment under the published notice. The Secretary believes, furthermore, that the regulatory criteria and the funding preferences, as applied, will result in equitable treatment of projects in small and rural states.

FOR FURTHER INFORMATION CONTACT: For technical assistance and general program information about the availability of sections 329 and 330 funds, contact Richard C. Bohrer, (301) 443–2260. For additional information about funding major capital needs contact Ray Vacca, (301) 443–5295.

SUPPLEMENTARY INFORMATION: In the Catalog of Federal Domestic Assistance, the Community Health Center program is listed as Number 93.224 and the Migrant Health Center program is number 93.246.

Dated: August 13, 1992.

Robert G. Harmon,

Administrator.

[FR Doc. 92–19605 Filed 8–17–92; 8:45 am]

BILLING CODE 4160–15–M

National Institutes of Health

National Heart, Lung, and Blood Institute; Meetings

Pursuant to Public Law 92–463, notice is hereby given of the meeting of the following Heart, Lung, and Blood Special Emphasis Panel.

This meeting will be open to the public to discuss administrative details relating to Special Emphasis Panel (SEP) business for approximately one half hour at the beginning of the meeting. Attendance by the public will be limited to space available. This meeting will be closed thereafter in accordance with the provisions set forth in sec. 552b(c)(4) and 552b(c)(6), title 5, U.S.C. and section 10(d) of Pub. L. 92–463, for the review, discussion and evaluation of individual grant applications. These applications and the discussions could reveal confidential trade secrets or commercial property such as patentable material, and personal information concerning individuals associated with the applications, the disclosure of which would constitute a clearly unwarranted invasion of personal privacy.

The Office of Committee Management, National Heart, Lung, and Blood Institute, Westwood Building, room 7A15, National Institutes of Health, Bethesda, Maryland 20892, telephone 301–496–7548, will furnish a summary of the meeting and rosters of panel members. Substantive program information may be obtained from each Scientific Review Administrator whose telephone number is provided. Since it is necessary to schedule meetings well in advance, it is suggested that anyone planning to attend a meeting contract the Scientific Review Administrator to confirm the exact date, time and location.

Name of Panel: NHLBI SEP Review for Multi-Device Registry (Conference Phone Call).

Scientific Review Administrator: Dr. David Monsees, Telephone 301–495–7361.

Dates of Meetings: August 26, 1992.

Place of Meeting: Westwood Building—room 550.

Time of Meeting: 11:30 a.m.

(Catalog of Federal Domestic Assistance Program Nos. 93.837, Heart and Vascular Diseases Research; 93.838, Lung Diseases Research; and 93.839, Blood Diseases and Resources Research, National Institutes of Health.)

Dated: August 7, 1992.

Susan K. Feldman,

Committee Management Officer, NIH.

[FR Doc. 92–19590 Filed 8–17–92; 8:45 am]

BILLING CODE 4140–01–M

DEPARTMENT OF THE INTERIOR

Bureau of Land Management

[WY-030-92-4111-16]

Mulligan Draw Gas Field Project; Environmental Impact Statement

AGENCY: Bureau of Land Management, Interior.

ACTION: Notice of availability of the Final Environmental Impact Statement (FEIS) on the Mulligan Draw Gas Field Project in southeast Sweetwater County, Wyoming.

SUMMARY: This FEIS was prepared to assess the environmental consequences of a proposed gas field development in the Mulligan Draw Area, in southeastern Sweetwater County, Wyoming in accordance with the National Environmental Policy Act of 1969. This FEIS incorporates by reference the material presented in the DEIS and should be used in conjunction with the DEIS. The DEIS was modified as appropriate in response to public comments received. This project, as proposed by Celsius Energy Company, Amoco, and other operators, is to explore for and develop natural gas reserves in the Mulligan Draw Project Area.

DATES: The public comment period on the FEIS will begin on August 21, 1992, and will end on September 21, 1992. In order to assure that comments are considered in the Record of Decision (ROD) for the Mulligan Draw Gas Field Project, they must be received no later than close of business on Monday, September 21, 1992.

ADDRESSES: Comments on the FEIS should be addressed to Bureau of Land Management, Great Divide Resource Area, c/o Bud Holbrook, P.O. Box 670, Rawlins, Wyoming 82301.

FOR FURTHER INFORMATION CONTACT: Bob Tigner, phone (307) 324-7171, or Bud Holbrook, phone (307) 324-4841 or contact the address listed above.

SUPPLEMENTARY INFORMATION: This Final Environmental Impact Statement assesses the environmental consequences of gas development in the Mulligan Draw area in southeastern Sweetwater County, approximately 20 miles south of Wamsutter, Wyoming. The Draft Environmental Impact Statement was released to the public on May 15, 1992, and the comment period closed on July 15, 1992. A Public meeting was held on June 3, 1992 and four individuals offered comments at that time. Eight comment letters were received during the comment period. The proposed project entails the drilling, operation, abandonment, and reclamation of a natural gas field in the Mulligan Draw Project Area by Celsius Energy Company and other operators. Approximately 45 wells and associated roads and pipelines would result in the initial disturbance of approximately 645 acres within the 47,300 acre Mulligan Draw Project Area.

Dated: August 11, 1992.

Ray Brubaker,

State Director, Wyoming.

[FR Doc. 92-19648 Filed 8-17-92; 8:45 am]

BILLING CODE 4310-22-M

Bureau of Land Management

[MT-020-02-4211-02]

Montana; Meeting

AGENCY: Bureau of Land Management, Miles City District Office, Interior.

ACTION: Notice of special meeting.

SUMMARY: The Miles City District Advisory Council will meet September 17, 1992. The Council will meet on urgent planning matters for the District at 2 p.m. The meeting will be held in the District Office Conference Room on Garryowen Road.

The meeting is open to the public. The public may make oral statements before the Council or file written statements for the Council to consider. Depending on the number of persons wishing to make an oral statement, a per person time limit may be established. Summary minutes of the meeting will be available for public inspection and reproduction during regular business hours within 30 days following the meeting.

FOR FURTHER INFORMATION CONTACT: District Manager, Miles City District, Bureau of Land Management, P.O. Box 940, Miles City, Montana 59301 or phone (406) 232-4331.

Janet L. Edmonds,

Acting District Manager.

[FR Doc. 92-19646 Filed 8-17-92; 8:45 am]

BILLING CODE 4310-DN-M

[MT-930-4212-13; MTM 76849]

Conveyance of Certain Lands in Beaverhead, Carbon, Deer Lodge, and Madison Counties, Montana, and Order Providing for Opening of Public Land in Carbon and Madison Counties; Montana

AGENCY: Bureau of Land Management, Interior.

ACTION: Notice.

SUMMARY: This order will open located in Carbon County which were reconveyed to the United States in an exchange under the Federal Land Policy and Management Act of 1976, 43 U.S.C. 1701 et seq. (FLPMA), to the operation of the public land laws, mining laws, and leasing of minerals other than oil and gas. It will also open lands located in Madison County, which were reconveyed to the United States, to the operation of the public land laws and leasing of minerals other than oil and gas. The lands acquired in the exchange provide additional access to the Madison and Big Hole Rivers, wildlife habitat, and increased opportunity for habitat improvement projects. The exchange also allows increased management efficiency of public land.

EFFECTIVE DATE: September 28, 1992.

FOR FURTHER INFORMATION CONTACT: James Binando, BLM Montana State Office, P.O. Box 36800, Billings, Montana 59107, 406-255-2935.

SUPPLEMENTARY INFORMATION: 1. Notice is hereby given that pursuant to section 206 of FLPMA coal only was transferred to Meridian Minerals company:

Principal Meridian, Montana

T. 5 N., R. 27 E.,
Sec. 4, lots 1-4, incl.
T. 6 N., R. 27 E.,
Sec. 18, lots 1-4, incl., E½, E½W½;
Sec. 20, all;
Sec. 28, all;
Sec. 30, lots 1-4, incl., E½, E½W½;
Sec. 32, N½, SE¼;
Sec. 34, N½, SW¼.
Total acreage conveyed; 3,673.16 acres.

2. In exchange for the above selected land, the United States acquired the following described surface estate and all minerals except oil and gas from Meridian Minerals Company:

Principal Meridian, Montana

a. Beaverhead County:

T. 1 N., R. 13 W.,
Sec. 9, SW¼, NW¼NW¼;
Sec. 17, part lying SE of C/L of Bid Hole River;
Sec. 19, part lying SE of C/L of Big Hole River.
Containing 1,297.92 acres, more or less.

b. Carbon County:

T. 9 S., R. 21 E.,
Sec. 1, lots 1-4, incl.;
Sec. 3, lots 2, 3, 4, S½N½, S½;
Sec. 5, lots 1-4, incl., S½N½, N½S½, S½SE¼;
Sec. 7, lots 1-4, incl., E½W½, E½;
Sec. 9, NE¼, N½NW¼, S½SW¼;
Sec. 11, all;
Sec. 13, lots 3 and 4;

Sec. 15, N½, W½SW¼, E½SE¼, SW¼SE¼;
Sec. 17, all;
Sec. 19, lots 1–4, incl., E½W½, E½;
Sec. 21, all;
Sec. 23, all;
Sec. 25, lots 1–3, incl.;
Sec. 27, all;
Sec. 29, all;
Sec. 31, lots 1–4, incl.;
Sec. 33, lots 1–4, incl;

Containing 7,700.25 acres, more or less.

c. Deer Lodge County:

T. 1 N., R. 13 W.,
Sec. 17, part of W½NW¼ lying W of C/L of Big Hole River;
Sec. 19, part lying NW of C/L of Big Hole River,

Containing 177.56 acres, more or less.

d. Madison County:

T. 8 S., R. 1 W.,
Sec. 15, part lying W of East bank of Madison River;
Sec. 25, part of N½NE¼ lying E of West bank of Madison River.

T. 9 s., R. 1 W.,
Sec. 1, lots 6 and 7, SW¼NE¼.

Containing 697.45 acres, more or less.
Total acres reconveyed to U.S.; 9,873.18.

3. The value of the Federal coal was appraised at $730,000.00 and the private land was appraised at $1,149,700.00. The difference in value was donated to the U.S., and no cash equalization payment was made.

4. At 9 a.m. on September 28, 1992, only the lands described in paragraph 2b above (Carbon County) will be opened to the operation of the public land laws, generally, mining and leasing of minerals other than oil and gas. The lands described in paragraph 2d above (Madison County) will be opened only to the operation of the public land laws and leasing of minerals other than oil and gas, subject to valid existing rights and requirements of applicable law. The lands in paragraphs 2a and 2c (Beaverhead County and Deer Lodge County) are not open at this time, pending completion of planning. All valid applications received at or prior to 9 a.m. on September 28, 1992, shall be considered as simultaneously filed at that time. Those received thereafter shall be considered in the order of filing.

Dated: August 7, 1992.

John A. Kwiatkowski,

Deputy State Director, Division of Lands and Renewable Resources.

[FR Doc. 92–19542 Filed 8–17–92; 8:45 am]

BILLING CODE 4310–DN–M

[NV–055–801–4333–13–4894]

Ash Springs Area, CA; Overnight Camping

AGENCY: Bureau of Land Management, Las Vegas District, Caliente Resource Area.

ACTION: Proposal to establish the following rules on the public lands portion of Ash Springs.

Rules for the Public Portion of Ash Springs

1. No overnight camping.
2. Recreation time is limited to two hours for each group or individual.
3. No placement of sport or exotic (aquarium) fish into the pond.
4. No adding of any detergents, soaps or other toxic materials into the pond.
5. No cutting of vegetation for firewood.

COMMENTS: Please submit written comments by [30 days after date of publication] to: Bureau of Land Management, Ben Collins, District Manager, Las Vegas District, P.O. Box 26569, Las Vegas, NV 89126.

FOR FURTHER INFORMATION CONTACT: Bureau of Land Management, Curtis G. Tucker, Area Manager, Caliente Resource Area, P. O. Box 237, Caliente, Nevada 89008 (telephone (702) 726–8100).

ADDITIONAL INFORMATION: Ash Springs contains the White River Springfish (*Crenichthys baileyi baileyi*) a Federally Endangered species. A Coordinated Resource Management Plan was developed for the area in which one of the planned actions was to establish rules to restrict certain activities to help protect the fish species.

Ben F. Collins,

District Manager.

[FR Doc. 92–19548 Filed 8–17–92; 8:45 am]

BILLING CODE 4310–HC–M

National Park Service

National Register of Historic Places; Notification of Pending Nominations

Nominations for the following properties being considered for listing in the National Register were received by the National Park Service before August 4, 1992. Pursuant to § 60.13 of 36 CFR part 60 written comments concerning the significance of these properties under the National Register criteria for evaluation may be forwarded to the National Register, National Park Service, P.O. Box 37127, Washington, DC 20013–7127. Written comments should be submitted by September 2, 1992.

Beth L. Savage,

Acting Chief of Registration, National Register.

ARKANSAS

Arkansas County

First United Methodist Church (Structures in Arkansas Represented by the Charles L. Thompson Design Collection TR), Jct. of Jefferson and Cross Sts., DeWitt, 92001158

Franklin County

First Methodist Episcopal Church, South, 503 W. Commercial St., Ozark, 92001154

Garland County

Carpenter Dam, 1398 Carpenter Dam Rd., Hot Springs vicinity, 92001083

Hot Spring County

Remmel Dam, Remmel Dam Rd., Jones Mill vicinity, 92001084

Pulaski County

Arkansas Power & Light Building, Jct. of Ninth St. and Louisiana St., Little Rock, 92001156

Cherry—Luter Estate, 521 W. Scenic Dr., North Little Rock, 92001155

Washington County

House at 712 N. Mill Street, 712 N. Mill St., Springdale, 92001157

INDIANA

Allen County

South Wayne Historic District, Roughly bounded by W. Wildwood Ave., S. Wayne Ave., Packard Ave. and Beaver Ave., Fort Wayne, 92001146

Carroll County

Raber, Fred and Minnie, Farm, IN 218 E of Co. Rd. 425 W, Camden vicinity, 92001169

Huntington County

Huntington Courthouse Square Historic District, Roughly bounded by State, Court and Cherry Sts., Park Dr. and the alley between Warren and Guilford Sts; Huntington, 92001163

Jay County

Redkey Historic District, Roughly, High St. between Oak and Meridian Sts., Redkey, 92001168

Kosciusko County

Hall Farm, Jct. of 600 N and 400 W, Clunette, 92001164

Pierceton Historic District, N. First St. from Catholic St. to the Conrail RR tracks, Pierceton, 92001147

Silver Lake Historic District, 100 blocks of N. and S. Jefferson and E. and W. Main Sts., Silver Lake, 92001148

Parke County

Bridgeton Historic District, Roughly bounded by the N bank of Big Raccoon Cr., George and Clark Sts., Mill Alley and the alley E of Main St; Bridgeton, 92001167

Porter County

Coambs, Norris and Harriet, Lustron House, 411 Bowser Ave., Chesterton, 92001165

Shelby County

Liberty Township Schoolhouse No. 2, Jct. of IN 244 and Co. Rd. 600 E, Waldron vicinity, 92001170

Vigo County

Wabash Avenue East Historic District (Boundary Increase), 26—34 Eighth Sts., Terre Haute, 92001166

Wabash Avenue East Historic District (Boundary Decrease), 20—32 S. 7th Sts., Terre Haute, 92001185

IOWA

Polk County

Ashby Manor Historic District (Suburban Developments in Des Moines Between the World Wars MPS), Roughly bounded by Beaver Ave. and Ashby Park, Des Moines, 92001150

MARYLAND

Baltimore Independent City

Madison Avenue Methodist Episcopal Church, 1327 Madison Ave., Baltimore (Independent City), 92001153

NEVADA

Clark County

Little Church of the West, 3960 Las Vegas Blvd. S., Las Vegas, 92001161

Storey County

Marlette Lake Water System, Roughly, from Marlette Lake E to NV 80, Virginia City vicinity, 92001162

NEW HAMPSHIRE

Merrimack County

Harvey, Matthew, House, W side of Harvey Rd., 0.25 mi. N of jct. with Keyser St., Sutton, 92001082

NORTH CAROLINA

Davie County

McGuire—Setzer House, NC 1139 0.2 mi. S of Mocksville town limits, Mocksville vicinity, 92001152

OHIO

Jefferson County

Carnegie Library of Steubenville, 407 S. Fourth St., Steubenville, 92001160

Lucas County

Isham, John, Farmstead, 8460 S. River Rd., Waterville, 92001159

VERMONT

Chittenden County

Williston Village Historic District (Boundary Increase), Off US 2, over Allen Brook, Williston, 92001151

[FR Doc. 92-19568 Filed 8-17-92; 8:45 am]

BILLING CODE 4310-70-M

INTERSTATE COMMERCE COMMISSION

[Docket No. AB-368X]

The Monongahela Connecting Railroad Company—Abandonment and Discontinuance Exemption—in Allegheny County, PA

AGENCY: Interstate Commerce Commission.

ACTION: Notice of exemption.

SUMMARY: The Commission is exempting from the prior approval requirements of 49 U.S.C. 10903–10904 the Monongahela Connecting Railroad Company's abandonment of four segments of line totalling 2.2 miles and discontinuance of service over a 0.7-mile segment (the Whitehall Lead), in Pittsburgh, PA, subject to employee protective and historic preservation conditions.

DATES: Provided no formal expression of intent to file an offer of financial assistance has been received, this exemption will be effective on September 17, 1992. Formal expressions of intent to file an offer of financial assistance under 49 CFR 1152.27(c)(2) [1] must be filed by August 28, 1992. Requests for public use conditions must be filed by September 8, 1992. Petitions to stay must be filed by September 2, 1992. Petitions to reopen must be filed by September 14, 1992.

ADDRESSES: Send pleadings referring to Docket No. AB-368X to:

(1) Office of the Secretary, Case Control Branch, Interstate Commerce Commission, Washington, DC 20423

(2) Petitioner's representative: Mark H. Sidman, Weiner, Brodsky, Sidman & Kider, 1350 New York Avenue, NW., Washington, DC 20005-4797.

FOR FURTHER INFORMATION CONTACT: Richard B. Felder, (202) 927-5610. [TDD for hearing impaired: (202) 927-5721]

SUPPLEMENTARY INFORMATION: Additional information is contained in the Commission's decision. To purchase a copy of the full decision, write to, call, or pick up in person from: Dynamic Concepts, Inc., room 2229, Interstate Commerce Commission Building, Washington, DC 20423. Telephone: (202) 289-4357/4359. [Assistance for the hearing impaired is available through TDD service (202) 927-5721.]

Decided: August 11, 1992.

By the Commission, Chairman Philbin, Vice Chairman McDonald, Commissioners Simmons, Phillips, and Emmett.

Sidney L. Strickland, Jr.,

Secretary.

[FR Doc. 92-19664 Filed 8-17-92; 8:45 am]

BILLING CODE 7035-01-M

[1] *See Exempt. of Rail Abandonment—Offers of Finan. Assist.*, 4 I.C.C.2d 164 (1987).

DEPARTMENT OF JUSTICE

Information Collections Under Review

The Office of Management and Budget (OMB) has been sent the following collection(s) of information proposals for review under the provisions of the Paperwork Reduction Act (44 U.S.C. chapter 35) and the Paperwork Reduction Reauthorization Act since the last list was published. Entries are grouped into submission categories, with each entry containing the following information:

(1) The title of the form/collection;

(2) The agency form number, if any, and the applicable component of the Department sponsoring the collection;

(3) How often the form must be filled out or the information is collected;

(4) Who will be asked or required to respond, as well as a brief abstract;

(5) An estimate of the total number of respondents and the amount of time estimated for an average respondent to respond;

(6) an estimate of the total public burden (in hours) associated with the collection; and,

(7) An indication as to whether Section 3504(h) of Public Law 96-511 applies.

Comments and/or suggestions regarding the item(s) contained in this notice, especially regarding the estimated public burden and associated response time, should be directed to the OMB reviewer, Ms. Lin Liu on (202) 395-7340 and to the Department of Justice's Clearance Officer, Mr. Don Wolfrey, on (202) 514-4415. If you anticipate commenting on a form/collection, but find that time to prepare such comments will prevent you from prompt submission, you should notify the OMB reviewer and the DOJ Clearance Officer of your intent as soon as possible. Written comments regarding the burden estimate or any other aspect of the collection may be submitted to Office of Information and Regulatory Affairs, Office of Management and Budget,

Washington, DC 20503, and to Mr. Don Wolfrey, DOJ Clearance Officer, SPS/JMD/5031 CAB, Department of Justice, Washington, DC 20530.

Extension of the Expiration Date of a Currently Approved Collection Without any Change in the Substance or in the Method of Collection

(1) Refugee/Asylee Relative Petition.
(2) I-730. Immigration and Naturalization Service.
(3) On occasion.
(4) Individuals or households. The I-730 information is used to file petitions on behalf of the applicant's spouse and/or child who has never had refugee or asylee status.
(5) 2,500 annual responses at .083 hours per response.
(6) 207 annual burden hours.
(7) Not applicable under 3504(h).

---

(1) Assurance by a United States Sponsor in Behalf of an Applicant for Refugee Status.
(2) I-591. Immigration and Naturalization Service.
(3) On occasion.
(4) Individuals or households. The I-591 information is used by a U.S. sponsor in behalf of a refugee as acceptable sponsorship agreement and guarantee of transportation in order to be approved for refugee status under Section 207 of the Immigration and Nationality Act.
(5) 5,000 annual responses at .332 hours per response.
(6) 1,660 annual burden hours.
(7) Not applicable under 3504(h).

Public comment on these items is encouraged.

Dated: August 12, 1992.

Don Wolfrey,

Department Clearance Officer, Department of Justice.

[FR Doc. 92-19558 Filed 8-17-92; 8:45 am]

BILLING CODE 4410-15-M

Jack Colbert, et al.; Notice of Lodging of a Consent Decree

In accordance with Departmental policy, 28 CFR 50.7, notice is hereby given that on August 13, 1992, a proposed consent decree in *United States* v. *Jack Colbert, et al.*, 87 Civ. 4789 (MGC), was lodged with the United States District Court for the Southern District of New York. The decree resolves claims of the United States against defendants Arnold Schwartz, Arnold Fader, New Island Investors, and Lynric Associates, Inc. ("Settling Defendants") in the above-referenced action under the Comprehensive Environmental Response, Compensation, and Liability Act ("CERCLA") for contamination at the Signo Trading Site, 11 Hartford Avenue, Mount Vernon, New York (the "Site"). In the proposed consent decree the Settling Defendants agree to pay the United States $71,000.00 in settlement of the United States' claims for response costs incurred by the Environmental Protection Agency at the Site.

The proposed decree may be examined at the Office of the United States Attorney, One Saint Andrews Plaza, New York, New York; and at the Consent Decree Library, 601 Pennsylvania Avenue, NW., Washington, DC 20004, (202) 347-2072. A copy of the decree may be obtained in person or by mail from the Consent Decree Library, 601 Pennsylvania Avenue, NW., Box 1097, Washington, DC 20044. In requesting a copy of the decree, please enclose a check for $3.75 (25 cents per page reproduction cost) payable to the Consent Decree Library.

The Department of Justice will receive written comments relating to the proposed consent decree for a period of thirty (30) days from the date of publication of this notice. Comments should be addressed to Assistant Attorney General, Environment and Natural Resources Division, Department of Justice, Washington, DC 20530, and should refer to *United States* v. *Jack Colbert, et al.*, (DOJ Reference No. 90-11-3-244).

John C. Cruden,

Chief, Environmental Enforcement Section, Environment and Natural Resources Division.

[FR Doc. 92-19729 Filed 8-17-92; 8:45 am]

BILLING CODE 4410-01-M

Antitrust Division

Pursuant to the National Cooperative Research Act of 1984—Petroleum Environmental Research Forum

Notice is hereby given that, on July 14, 1992, pursuant to section 6(a) of the National Cooperative Research Act of 1984, 15 U.S.C. 4301 *et seq.* ("the Act"), the participants in the Petroleum Environmental Research Forum ("PERF") Project No. 90-02 have filed written notification simultaneously with the Attorney General and the Federal Trade Commission disclosing (1) the identities of the parties to the project, and (2) the nature and objectives of the project. The notification was filed for the purpose of invoking the Act's provisions limiting the potential recovery of antitrust plaintiffs to actual damages under specified circumstances. Pursuant to section 6(b) of the Act, the identities of the parties participating in the project and its general area of planned activities are given below.

The parties to the project are: Amoco Corporation, Naperville, IL; ICI Chemical Industries PLC, Norwich, ENGLAND; Exxon Research & Engineering, Florham Park, NJ; and Mobil Research and Development Corporation, Paulsboro, NJ.

The nature and objective of the project performed in accordance with Project No. 90-02, "Environmental and Process Optimization of Halogen Antimicrobial Performance in Cooling Water Systems: Alternatives to Gaseous Chlorine," is directed to comparing the efficiency of bromine versus chlorine for cooling water microbiological control. The proposed research will address process kinetics as a means of optimizing halogen antimicrobial application to cooling water systems. The parties intend to file additional written notification disclosing all changes in membership of this project.

Joseph H. Widmar,

Director of Operations, Antitrust Division.

[FR Doc. 92-19541 Filed 8-17-92; 8:45 am]

BILLING CODE 4410-01-M

DEPARTMENT OF LABOR

Labor Advisory Committee for Trade Negotiations and Trade Policy; Meeting

Pursuant to the provisions of the Federal Advisory Committee Act (Pub. L. 92-463 as amended), notice is hereby given of a meeting of the Labor Advisory Committee for Trade Negotiations and Trade Policy.

Date, time and place: September 21, 1992, 10 a.m.-12 noon. Rm. N-3437 A&B, Department of Labor Building, 200 Constitution Ave., NW., Washington, DC 20210.

Purpose: To discuss trade negotiations and trade policy of the United States.

This meeting will be closed under the authority of section 10(d) of the Federal Advisory Committee Act and 5 U.S.C. 552(c)(1). The Committee will hear and discuss sensitive and confidential matters concerning U.S. trade negotiations and trade policy.

For further information, contact: Fernand Lavallee, Director, Trade Advisory Group, Phone: (202) 523-2752.

Signed at Washington, DC this 12th day of August, 1992.

Shellyn G. McCaffrey,

Deputy Under Secretary, International Affairs.

[FR Doc. 92-19647 Filed 8-17-92; 8:45 am]

BILLING CODE 4510-28-M

Employment and Training Administration

Determinations Regarding Eligibility to Apply for Worker Adjustment Assistance

In accordance with section 223 of the Trade Act of 1974 (19 U.S.C. 2273) the Department of Labor herein presents summaries of determinations regarding eligibility to apply for adjustment assistance issued during the period of July 1992.

In order for an affirmative determination to be made and a certification of eligibility to apply for adjustment assistance to be issued, each of the group eligibility requirements of section 222 of the Act must be met.

(1) That a significant number or proportion of the workers in the workers' firm, or an appropriate subdivision thereof, have become totally or partially separated,

(2) That sales or production, or both, of the firm or subdivision have decreased absolutely, and

(3) That increases of imports of articles like or directly competitive with articles produced by the firm or appropriate subdivision have contributed importantly to the separations, or threat thereof, and to the absolute decline in sales or production.

Negative Determinations

In each of the following cases the investigation revealed that criterion (3) has not been met. A survey of customers indicated that increased imports did not contribute importantly to worker separations at the firm.

TA-W-27,356; Silite, Inc., Chicago, IL
TA-W-27,248; Maxtec International Corp., Telemotive Div., Chicago, IL
TA-W-27,328; Graniteville Co., Graniteville, SC
TA-W-27,204; Cooper Industries, Wagner Lighting Div., Sparta, TN
TA-W-27,077; Itron, Inc., Spokane, WA
TA-W-27,298; J & G Shake Co., Forks, WA
TA-W-27,294; Torch Operating Co., Houma, LA
TA-W-27,335; Kenmar Manufacturing Co., Philadelphia, PA
TA-W-27,355; Rowe International, Inc., Whippany, NJ

In the following cases, the investigation revealed that the criteria for eligibility has not been met for the reasons specified.

TA-W-27,283; ABC Service, Inc., Dickinson, ND

The workers' firm does not produce an article as required for certification under section 222 of the Trade Act of 1974.

TA-W-27,349; Lewis Casing Crews, Inc., Odessa, TX

The investigation revealed that criterion (1) has not been met. Significant number or proportion of the workers did not become totally or partially separated as required for certification.

TA-W-27,359; Mobil Natural Gas, Inc., (MNGI), Houston, TX

The workers' firm does not produce an article as required for certification under section 222 of the Trade Act of 1974.

TA-W-27,415; GP/Sorenson, Glasgow, KY

The workers' firm does not produce an article as required for certification under section 222 of the Trade Act of 1974.

TA-W-27,382; General Electric Co., Linton, IN

Increased imports did not contribute importantly to worker separations at the firm.

TA-W-27,299; Sprague Electric Co., Stafford, CT

Increased imports did not contribute importantly to worker separations at the firm.

TA-W-27,288; Kerr-McGee Coal Corp., Headquarters, Oklahoma City, OK

U.S. imports of coal are negligible.

TA-W-27,301; Marine Cascade Iron Works, Clinton, ME

U.S. imports of fabricated structural steel declined absolutely and relative to domestic shipments in 1991 compared to 1990 and in the first three months of 1992 compared to the same period in 1991.

TA-W-27,202 United States Steel Group, South Plant, Chicago, IL

U.S. imports of fabricated structural steel declined absolutely and relative to domestic shipment in 1991 compared to 1990 and in the first three months of 1992 compared to the same period in 1991.

TA-W-27,258; Hinchen Brothers Shingle and Shake Co, Inc, Forks, WA

Increased imports did not contribute importantly to worker separations at the firm.

Affirmative Determinations

TA-W-27,208; High Country Contacts, Inc., Delta, CO

A certification was issued covering all workers separated on or after April 13, 1991.

TA-W-27,275; Hondo Oil and Gas Co., Roswell, NM

A certification was issued covering all workers separated on or after May 6, 1991.

TA-W-27,288; H & M Dress, Wilkes-Barre, PA

A certification was issued covering all workers separated on or after June 8, 1991.

TA-W-27,385; Henson Kickernick, Greenville, TX

A certification was issued covering all workers separated on or after May 11, 1991.

TA-W-27,399; Spartus Corp., Louisville, MS

A certification was issued covering all workers separated on or after June 10, 1991.

TA-W-27,432; Sojourner Drilling Corp., Abilene, TX

A certification was issued covering all workers separated on or after June 24, 1991.

TA-W-26,324; Acme United Corp., Bridgeport, CT

A certification was issued covering all workers producing cast iron scissors and shears separated on or after April 18, 1991.

TA-W-26,736; M H Rhodes, Inc., Avon, CT

A certification was issued covering all workers separated on or after December 3, 1990.

TA-W-27,386; Petro-Log, Inc., Lafayette, LA

A certification was issued covering all workers separated on or after May 31, 1991.

TA-W-27,363; Halliburton Services, Stimulation Services Flex Crew Headquartered in Duncan, OK

A certification was issued covering all workers separated on or after September 1, 1991.

TA-W-27,445, TA-W-27,446, TA-W-27,447 & TA-W-27,448; The Louisiana Land & Exploration Co., New Orleans, LA, Houston TX, Denver CO, Oklahoma City, OK

A certification was issued covering all workers separated on or after June 19, 1991.

TA-W-27,154; The GHK Co., Oklahoma City, OK

A certification was issued covering all workers separated on or after April 3, 1991.

TA-W-27,327; Graniteville Co., Vaucluse, SC

A certification was issued covering all workers separated on or after May 19, 1991.

TA-W-27,396; Frigidaire Co., Mansfield, OH

A certification was issued covering all workers separated on or after June 5, 1991.

TA-W-27,244, TA-W-27,245 & TA-W-27,246; Coors Energy Co., Golden, CO, Erie, CO, Roosevelt, UT

A certification was issued covering all workers separated on or after April 8, 1991.

TA-W-27,332; Sonat Exploration Co., (Including Marshall Exploration, Inc)., Fort Smith, AR

A certification was issued covering all production workers separated on or after January 1, 1992.

TA-W-27,358; Sonat Exploration Co., (Including Marshall Exploration, Inc.) Headquartered in Houston, TX and Operating at Various Locations in the Following States A; AR, B; LA, C; OK, D; TX

A certification was issued covering all production workers separated on or after January 1, 1992.

TA-W-27,364; D.L. Knitting Co., Inc., North Arlington, NJ

A certification was issued covering all workers separated on or after May 27, 1991.

TA-W-27,350; The Western Co. of North America, Headquarters in Houston, TX & Operating at Various Locations in the Following States A; AL, B; MS, C; LA, D; CO, E; NM, F; TS, G; KS, H; OK

A certification was issued covering all workers separated on or after May 27, 1991.

TA-W-27,286; Kerr-McGee Corp., Headquartered in Oklahoma City, OK & Operating in the Following Other Locations: A; Lafayette, LA, B; Midland, TX, C; Houston, TX, D; Tyler, TX, and E; Casper, WY

A certification was issued covering all workers separated on or after November 28, 1991.

TA-W-27,199; Schlumberger Well Services, Land Services, Houma, AL & Operating in The Following Locations in the State of Texas: A; Abilene, B; Amarillo, C; Andrews, D; Brenham, E; Dallas, F; Edinsburg, G; Graham, H; Liberty, I; Midland, J; San Angelo, K; Sonora, L; Tyler, M; Webster, N; Houston, O; Wichita Falls

A certification was issued covering all workers separated on or after August 23, 1991.

TA-W-27,218; Schlumberger Well Services, Land Services, Div. Headquarters, Shreveport, LA & at Other Locations in The Following States: A; AL, B; AR, C; CA, D; CO, E; FL, F; KS, G; KY, H; LA, I; MI, J; MS, K; MT, L; NM, M; ND, N; OH, O; OK, P; PA, Q; WV, R; WY

A certification was issued covering all workers separated on or after August 23, 1991.

I hereby certify that the aforementioned determinations were issued during the month of July 1992. Copies of these determinations are available for inspection in room C-4318, U.S. Department of Labor, 200 Constitution Avenue, NW., Washington, DC 20210 during normal business hours or will be mailed to persons who write to the above address.

Dated: August 11, 1992.

Marvin M. Fooks,

Director, Office of Trade Adjustment Assistance.

[FR Doc. 92-19645 Filed 8-17-92; 8:45 am]

BILLING CODE 4510-30-M

NATIONAL COMMISSION ON AMERICA'S URBAN FAMILIES

Meeting

Notice is hereby given, pursuant to Public Law 92-463, that the National Commission on America's Urban Families will hold a meeting in Chicago, Illinois on September 2-3, and a hearing the afternoon of September 3, 1992. For exact times and locations of meeting and hearing, please contact the Commission two days prior to the event at 202-690-6462.

The purpose of the meeting is to deliberate on the issues to be covered in the report to the President. The purpose of the hearing is to inform the Commission about programs and approaches that work to strengthen America's urban families and to enable participants to express their views on this topic.

Records shall be kept of all Commission proceedings and shall be available for public inspection at 200 Independence Avenue, SW., room 305-F, Washington, DC 20201.

Anna Kondratas,

Executive Director.

[FR Doc. 92-19510 Filed 8-17-92; 8:45 am]

BILLING CODE 4150-04-M

NATIONAL SCIENCE FOUNDATION

Program Announcement; Presidential Faculty Fellows Program for Outstanding Young Science and Engineering Faculty (Closing Date: October 30, 1992)

This printed information contains the essence of the announcement for this program, and is not a full copy of the actual brochure containing the guidelines for submission. Before submitting a nomination, please obtain a printed copy of the guidelines by contacting the NSF publications unit.

The National Science Foundation (NSF) announces the competition for the Presidential Faculty Fellows Program (PFF) for FY 1993. The PFF program was established at the request of the President of the United States to recognize and support the scholarly activities of some of the Nation's most outstanding science and engineering faculty members early in their careers. The National Science Foundation seeks nominations of tenure-track faculty members who have demonstrated an exceptionally high level of research and teaching competence and who have the highest potential for leadership in academic pursuits. Awards are intended to allow Fellows to undertake self-designed, innovative research and teaching projects, to establish research and teaching programs, and to pursue other academic related activities. Awards will be announced by the White House in early 1993, and will carry a grant from the National Science Foundation of $100,000 per year for five years, subject to the availability of funds. Thirty PFF awards are planned of which fifteen (15) will be in engineering disciplines and fifteen (15) in science disciplines.

Eligibility Criteria

Institutional Eligibility

All institutions in the United States—including its territories or possessions, and the commonwealth of Puerto Rico—that offer a baccalaureate, master's or doctoral degree in a field supported by the Foundation are eligible to participate in this program. Each institution that can be identified by a separate Federal Entity Number may submit up to two nominations per year.

Nominating Official Eligibility

Nominations for PFF awards MUST be submitted by the institution's chief academic officer, such as the President, the Chancellor, or the Provost.

Faculty Eligibility

Any tenure-track or equivalent faculty (research and teaching) members, doing work in science, engineering, or research in the teaching or the learning of science, mathematics or engineering may be nominated.

Only U.S. citizens, nationals, or permanent residents who hold such status on or before October 30, 1992, are eligible to compete for a PFF award.

The Foundation will verify through the Immigration and Naturalization Service

the status of those individuals identified as permanent residents. The Foundation requests that permanent residents provide their residency or "A" number to accomplish this verification. Delay in providing such information may result in a delay in processing the nomination. To be eligible for nomination to the PFF program, nominees must:

• Have a doctoral degree (Ph.D or equivalent) awarded between January 1, 1985 and October 30, 1992;

• Hold a faculty tenure-track or equivalent position at their nominating institution by October 30, 1992; and

• Have begun their first faculty tenure-track or equivalent position at an eligible institution on or after January 1, 1989 but no later than October 30, 1992.

Calculating Nominee's Academic-Age for PFF Eligibility

Nominee eligibility is based on a nominee's academic age derived from the nominee's years from receipt of a doctoral degree and years in tenure-track or equivalent positions. Receipt of permanent residency is not a factor in determining academic age.

Generally, the controlling date used to determine academic age is the receipt of PhD. The start of a nominee's tenure-track position clock generally should not precede receipt of PhD. Nominees who left the tenure-track within six months of receipt of PhD may use as their qualifying tenure-track date the date of the first tenure-track or equivalent position after receipt of PhD.

In some instances, nominees who interrupted their careers because of parental leave may qualify as eligible nominees. Written confirmation from the NSF PFF Program Office of such eligibility must be obtained prior to nomination.

Current or former awardees of the Presidential Young Investigator (PYI) and NSF Young Investigator (NYI) programs who meet all the stated eligibility criteria, are eligible for PFF awards. In successful cases, such awardees will have their PYI or NYI awards terminated if active, and their PFF awards will be limited in duration to the number of years unused on their PYI or NYI awards. In no case, however, will the tenure of a PFF award be less than two years.

Discipline Eligibility

Nominees may work in any branch of science or engineering normally supported by the Foundation. Research in the teaching and learning of science, mathematics, technology and engineering is also eligible for support. However, activities such as the development of instructional materials or courses (including software, hardware, or laboratory equipment design), teacher education, or informal education are evidence of educational leadership and do not satisfy the criterion for the research plan.

The Foundation normally will not support biomedical research with disease-related goals, including work on the etiology, diagnosis, abnormality, or malfunction in human beings or animals. Animal models of such conditions, or development or testing of drugs or other procedures for their treatment also generally are not eligible for support.

Review and Selection

PFF is a Foundation-wide, cross-directorate (multi-disciplinary) program coordinated by the Directorate for Education and Human Resources. The NSF makes final assignment for merit review. An acknowledgement card will be sent to the nominee when the Foundation has recorded receipt of the nomination in its electronic system of records.

Fellows will be selected on the basis of merit, including leadership and leadership potential in research and education. NSF will administer the review process and fund awards; the final award decisions will be made by the White House. Recommendations for awards will be based on advice from outside scientists and engineers and may include consideration of factors related to science and engineering infrastructure, such as disciplinary, institutional and geographic distribution and representation of women, underrepresented minorities and instructors of undergraduates.

The review criteria for the nominee include:

Competence and Leadership as an Educator in science or engineering, including the potential for continuing outstanding contributions, as evidenced by implementation of new curricula, design of new courses, significant educational books, referred publications, papers presented at national or international meetings, honors, distinguished service, recognition by the community for contributions to public understanding of science or engineering, and other noteworthy education contributions.

Competence and Leadership as a Researcher in science or engineering, including the potential for continuing outstanding contributions, particularly as evidenced by definitive research accomplishments, referred publications, technical books published, patent and software credits, significant technical papers presented at national or international meetings, honors, distinguished service, recognition by the community for contributions to the public understanding of research by lay-persons, and other noteworthy research contributions.

Impact of Nominee on Nominating Institution as evidenced by factors such as significant facilitation of cross-disciplinary research efforts, recognized contributions to educational reforms, and other noteworthy service to the institution and in the community on behalf of the institution.

Nomination Procedures

A PFF submission consists of nine (9) complete sets of the nomination materials (signed original plus 8 copies), one (1) set of an additional forms package to be used for administrative purposes, and four (4) reference letters. Type styles should be no smaller than 12 characters per inch.

Nomination Materials

• Cover Sheet (NSF Form 1273B) and one (1) copy of the Certification Regarding Lobbying, page 26 of NSF 90–77 "Grants for Research and Education in Science and Engineering" (GRESE).

• Nominator's Statement (Limit: 3 pages)

• Nominee's Teaching and Research Qualifications (Limit: 1 page)

• Nominee's Research Description (Limit: 2 pages)

• Nominee's Teaching Plan (Limit: 1 page)

• Biographical Sketch (Limit: 3 pages)

Reference Letters

Up to four (4) reference letters are allowed. Do not submit more than four reference letters. Letters should be from persons who are familiar with the research and teaching capabilities of the nominee, and should not be from individuals at the nominating institution. They should be in the form of a letter addressed to the NSF Director and specifically address at least one of the review criteria. Letters do not have to be confidential or submitted to NSF in referee-sealed envelopes. Do not send letters directly to NSF. Reference letters that are sent under cover separate from the Nomination Submission may miss review.

Deadline for Submission of Nominations

All nomination submissions must be received at NSF by October 30, 1992. All nomination materials, forms and reference letters should be submitted as a single unit in a large envelope addressed to: Presidential Faculty Fellows (NSF 92–84), National Science

Foundation, 1800 G Street, NW., room 1202, Washington, DC 20550.

Support and Commitments

Institutions are expected to make a significant contribution to the support of awardees by guaranteeing their full academic-year salary. None of the funds provided by NSF under PFF awards may be used for the academic-year salary of the awardee. Indirect costs are limited to 10% of the total PFF funds provided by NSF. PFF awardees must remain in tenure-track or equivalent positions at an eligible institution at all times during the tenure of their awards. Awardees who do not comply with this regulation must resign their awards. The Foundation interprets sabbatical periods during the tenure of a PFF award as compatible with remaining in a tenure-track or equivalent position.

After awardees have been selected, they will be asked to submit a budget through their nominating institutions. Based on satisfactory annual progress reports and the availability of funds, the Foundation will provide support in annual increments. Awardees may expect to receive additional guidance regarding the administration of their grants.

Inquiries

General inquiries regarding the PFF program, including requests for copies of NSF publications, may be addressed to the Presidential Faculty Fellows (PFF) Program, National Science Foundation, Washington, DC 20550, or telephoned to (202) 357-9466.

Copies of the PFF guidelines or any other NSF publication, including GRESE, may be obtained from the NSF Publications Unit, Washington, DC 20550, telephone number (202) 357-7861. The PFF program announcement number is: 92-84. Electronic mail users who have access to either BITNET or INTERNET may address requests to pubs@nsf or pubs@nsf.gov, respectively. Fax requests for NSF publications may be addressed to: NSF Publications Unit, Fax number: (703) 644-4278. In any publications request, please include the NSF publication number and title, number of copies, your name, and a complete mailing address. Information on NSF programs is also available through the Science and Technology Information System (STIS), NSF's online publishing system, described in NSF91-1-(Revised 10/4/91), the "STIS flyer." To get a paper copy of the flyer, call the NSF Publications Unit at 202-357-7861. For an electronic copy, send an E-mail message to stisflyer@nsf.gov (INTERNET) or stisflyer@nsf (BITNET).

Dated: August 11, 1992.

Terence L. Porter,

Division Director.

Mary F. Sladek,

Program Officer.

[FR Doc. 92-19380 Filed 8-17-92; 8:45 am]

BILLING CODE 7555-01-M

NATIONAL SPACE COUNCIL

Meeting of the Space Launch Strategy Implementation Review Task Group

AGENCY: National Space Council.

ACTION: Notice of meeting.

SUMMARY: The Vice President's Space Policy Advisory Board Space Launch Strategy Implementation Review Task Group will meet September 2 and 3, 1992.

DATES: September 2 and 3, 1992.

ADDRESSES: 1215 Jefferson Davis Highway, suite 800, Arlington, Virginia, 22202.

FOR FURTHER INFORMATION CONTACT: Stephen Hopkins, (703) 685-3307 or James Beale, National Space Council, Executive Office of the President, Washington, DC, (202) 395-6175.

SUPPLEMENTARY INFORMATION: The Space Launch Strategy Implementation Review Task Group of the Vice President's Policy Advisory Board will meet between 8:30 a.m. and 5:30 p.m. on September 2, 1992 and between 8:30 a.m. and 12:00 p.m. on September 3, 1992 at the ANSER Corporation, suite 800, 1215 Jefferson Davis Highway, Arlington, Virginia. This meeting will be closed to the public under exception 1 of the Government in the Sunshine Act (5 U.S.C.S. 552b) from 4:15 p.m. to 5:30 p.m. September 2, 1992. All others portions will be open session. Persons interested in attending should contact Stephen Hopkins, (703) 685-3307 no later than September 1, 1992.

James R. Beale,

Designated Federal Officer.

[FR Doc. 92-19607 Filed 8-17-92; 8:45 am]

BILLING CODE 3128-01-M

NUCLEAR REGULATORY COMMISSION

Advisory Committee on Reactor Safeguards Subcommittee on Thermal Hydraulic Phenomena; Revised Meeting Notice

Notice was published in the **Federal Register** on Tuesday, August 4, 1992 (57 FR 34321), announcing the ACRS Subcommittee meeting on Thermal Hydraulic Phenomena to be held on Tuesday, August 18, 1992, at the Holiday Inn, Bethesda, MD. The meeting will now be held at 7920 Norfolk Avenue, room P-110, Bethesda, MD. All other items pertaining to this meeting remain the same as previously published.

FOR FURTHER INFORMATION CONTACT: Mr. Paul Boehnert, the cognizant ACRS staff engineer (telephone 301/492-8558) between 7:30 a.m. and 4:15 p.m. (EST).

Dated: August 11, 1992.

Sam Duraiswamy,

Chief, Nuclear Reactors Branch.

[FR Doc. 92-19625 Filed 8-17-92; 8:45 am]

BILLING CODE 7590-01-M

Advisory Committee on Reactor Safeguards Joint Meeting of the Subcommittees on Plant License Renewal/Reliability and Quality, Postponed

A joint meeting of the ACRS Subcommittees on Plant License Renewal and Reliability and Quality scheduled to be held on Tuesday, August 18, 1992, room P-110, 7920 Norfolk Avenue, Bethesda, MD has been postponed to September 16, 1992, as requested by the NRC staff. Notice of this joint meeting was published in the **Federal Register** on Tuesday, August 4, 1992 (57 FR 34321).

FOR FURTHER INFORMATION CONTACT: Mr. Elpidio Igne, the cognizant ACRS staff engineer, (telephone 301/492-8192) between 7:30 a.m. and 4:15 p.m. (EST).

Dated: August 11, 1992.

Sam Duraiswamy,

Chief, Nuclear Reactors Branch.

[FR Doc. 92-19626 Filed 8-17-92; 8:45 am]

BILLING CODE 7590-01-M

[Docket No. 50-446-CPA; ASLBP No. 92-668-01-CPA]

Texas Utilities Electric Company (Construction Permit Amendment), Establishment of Atomic Safety and Licensing Board

Pursuant to delegation by the Commission dated December 29, 1972, published in the **Federal Register**, 37 FR 28710 (1972), and §§ 2.105, 2.700, 2.702, 2.714, 2.714a, 2.717 and 2.721 of the Commission's Regulations, all as amended, an Atomic Safety and Licensing Board is being established in the following proceeding to rule on petitions for leave to intervene and/or requests for hearing and to preside over the proceeding in the event that a hearing is ordered.

Texas Utilities Electric Company

Comanche Peak Steam Electric Station, Unit No. 2, Construction Permit No. CPPR-127

This Board is being established pursuant to a notice published by the Commission on June 29, 1992, in the **Federal Register** (57 FR 28885) entitled, "Environmental Assessment and Finding of No Significant Impact." The proposed action would amend the construction permit by extending the latest construction completion date from August 1, 1992 to August 1, 1995.

The Board consists of the following administrative judges:

Morton B. Margulies, Chairman, Atomic Safety and Licensing Board Panel, U.S. Nuclear Regulatory Commission, Washington, DC 20555

James H. Carpenter, Atomic Safety and Licensing Board Panel, U.S. Nuclear Regulatory Commission, Washington, DC 20555

Peter S. Lam, Atomic Safety and Licensing Board Panel, U.S. Nuclear Regulatory Commission, Washington, DC 20555

All correspondence, documents and other materials shall be filed with the Board in accordance with 10 CFR 2.701 (1980).

Issued at Bethesda, Maryland, this 11th day of August 1992.

Robert M. Lazo,

Acting Chief Administrative Judge, Atomic Safety and Licensing Board Panel.

[FR Doc. 92-19624 Filed 8-17-92; 8:45 am]

BILLING CODE 7590-01-M

OFFICE OF PERSONNEL MANAGEMENT

Federal Salary Council; Meetings

AGENCY: Office Of Personnel Management.

ACTION: Notice of meetings.

SUMMARY: According to the provisions of section 10 of the Federal Advisory Committee Act (Pub. L. 92-463), notice is hereby given that the thirteenth through the sixteenth meetings of the Federal Salary Council will be held at the times and places shown below. The agenda for these meetings will be the discussion of issues relating to the new locality-based comparability payments authorized by the Federal Employees Pay Comparability Act of 1990 (FEPCA). The meetings will be open.

DATES: September 2 and 23, 1992, and October 5 and 28, 1992, beginning at 10 a.m.

ADDRESSES: Office Of Personnel Management, 1900 E Street, NW., room 7B09, Washington, DC.

FOR FURTHER INFORMATION CONTACT: Ruth O'Donnell, chief, Salary Systems Division, Office Of Personnel Management, 1900 E Street, NW., room 6H31, Washington, DC 20415-0001. Telephone number: (202) 606-2838.

For the President's Pay Agent.

Douglas A. Brook,

Acting Director.

[FR Doc. 92-19481 Filed 8-17-92; 8:45 am]

BILLING CODE 6325-01-M

SECURITIES AND EXCHANGE COMMISSION

Forms Under Review by Office of Management and Budget

Agency Clearance Officer: Kenneth A. Fogash, (202) 272-2142.

Upon Written Request copy available from: Securities and Exchange Commission Office of Filings, Information and Consumer Services, 450 5th Street, NW., Washington, DC 20549.

Proposed Revisions

Form S-3 File No. 270-61
Form 8-A File No. 270-54
Regulation C File No. 270-68
Regulation 12B File No. 270-70

Notice is hereby given that, pursuant to the Paperwork Reduction Act of 1980 (44 U.S.C. 3501 *et. seq.*), the Securities and Exchange Commission has submitted for OMB approval proposed revisions of Form S-3, Form 8-A Regulation C, and Regulation 12B.

Form S-3 is used to register securities under the Securities Act of 1933 ("Securities Act") provided that certain registrant and transaction requirements are met. As proposed to be revised, approximately 2,280 respondents would file Form S-3 annually and incur an average estimated 419 burden hours to comply with the form requirements.

Form 8-A is used to register pursuant to Section 12(b) or (g) of the Securities Exchange Act of 1934 ("Exchange Act") of securities of any issuer required to file reports pursuant to Sections 13 or 15(d) of the Exchange Act of pursuant to Sections 13 or 15(d) of the Exchange Act or pursuant to an order exempting the exchange on which the issuer has securities listed from registration as a rational securities exchange. Approximately 1,940 issuers would file Form 8-A annually and incur an average estimated 7.5 burden hours to comply with the form requirements.

Regulation C provides standard instructions to guide registrants filing registration statements under the Securities Act. Regulation 12B provides instructions to guide registrants filing registration statements and reports under the Exchange Act. Each of these regulations is assigned only one burden hour since the disclosure requirements that impose burdens on registrants are specified in the individual Securities Act and Exchange Act forms.

The estimated average burdens are solely for purposes of the Paperwork Reduction Act, and are not derived from a comprehensive or even representative sample or study of the costs of the Securities and Exchange Commission's rules and forms.

Direct general comments to Gary Waxman at the address below. Direct any comments concerning the accuracy of the estimated average burden for compliance with SEC forms to Kenneth A. Fogash, Deputy Executive Director, 450 Fifth Street, NW., Washington, DC 20549, and Gary Waxman, Clearance Officer, Office of Management and Budget (Paperwork Reduction Projects 3235-0056, 0062, 0073, and 0074), room 3208, New Executive Office Building, Washington, DC 20543.

Dated: July 31, 1992.

[FR Doc. 92-19637 Filed 8-17-92; 8:45 am]

BILLING CODE 8010-01-M

[Release No. 34-31010; File No. SR-CBOE-92-13]

Self-Regulatory Organizations; Notice of Filing of Proposed Rule Change by the Chicago Board Options Exchange, Inc.; Relating to Index Options with Quarterly Expirations

August 7, 1992.

Pursuant to section 19(b)(1) of the Securities Exchange Act of 1934 ("Act"), 15 U.S.C. 78s(b)(1), notice is hereby given that on July 16, 1992, the Chicago Board Options Exchange, Inc. ("CBOE" or "Exchange") filed with the Securities and Exchange Commission ("Commission" or "SEC") the proposed rule change as described in items I, II, and III below, which Items have been prepared by the CBOE. The Commission is publishing this notice to solicit comments on the proposed rule change from interested persons.

I. Self-Regulatory Organization's Statement of the Terms of Substance of the Proposed Rule Change

The CBOE hereby proposes to list for trading options on the Standard & Poor's ("S&P") 100 and S&P 500 Stock Indexes that will expire on the first business day of the month following the end of each

calendar quarter ("Quarterly Index Expirations" or "QIXs").[1]

The text of the proposed rule change is available at the Office of the Secretary, CBOE and at the Commission.

II. Self-Regulatory Organization's Statement of the Purpose of, and Statutory Basis for, the Proposed Rule Change

In its filing with the Commission, the CBOE included statements concerning the purpose of and basis for the proposed rule change and discussed any comments it received on the proposed rule change. The text of these statements may be examined at the places specified in Item IV below. The CBOE has prepared summaries, set forth in sections (A), (B) and (C) below, of the most significant aspects of such statements.

A. Self-Regulatory Organization's Statement of the Purpose of, and the Statutory Basis for, the Proposed Rule Change

(1) Purpose

In response to the proliferation of over-the-counter ("OTC"), non-exchange traded options, and in order to accommodate institutional investors whose performance is judged on a quarterly basis, the Exchange is proposing to list options on the S&P 100 and S&P 500 stock indexes that expire on the first business day of the month following the end of a calendar quarter, rather than the customary expiration date of "the Saturday immediately following the third Friday of the expiration month." For example, if QIXs were currently listed, the expiration dates for the next three quarters would be October 1, 1992, January 4, 1993 and April 1, 1993. The exercise settlement value for QIXs will be based on the closing value of the corresponding index on the last business day before expiration, or, in other words, the last business day of the preceding calendar quarter. The symbols for S&P 100 and 500 QIXs will be OEQ and SPQ, respectively. The Exchange intends to list up to eight quarterly expirations for both OEQ and SPQ options.

Contract terms for the QIX options will be similar to the corresponding S&P 100 ("OEX") and S&P 500 ("SPX") Stock Index options that presently trade on the Exchange. For example, S&P 100 QIXs will have American-style exercise, with the daily exercise settlement value based on the index value derived from the closing prices of component stocks. Similarly, QIXs on the S&P 500 will have European-style exercise and the exercise settlement value will be based upon the index value derived from the closing prices of component stocks on the last trading day prior to expiration.

Other than the change of the expiration date, the only other change in the contract terms for QIX index options is that the multiplier for QIX index options may be set at 500 rather than the customary 100. The Exchange has retained the discretion to list larger QIX contracts because an increased value contract may be justified given the values of the portfolios managed by institutional customers. In this regard, however, if the multiplier for a class of QIX options is set at 500, then positions in such options class will be multiplied by five in determining compliance with the applicable position and exercise limits. In addition, QIX index options will be aggregated with positions in other CBOE-traded options based on the S&P 100 and 500 Indexes for position and exercise limit purposes and will be subject to the Exchange's position and exercise limits applicable to index options settled based on the closing prices of the index's component securities. Accordingly, the position limits for OEQ and SPQ options will be 25,000 contracts, with no more than 15,000 of which are in the near-term expiration month.

Consistent with the authority of the Exchange to change the arrangement of expiration months,[2] the CBOE further proposes that any proposed modification in the arrangement of expiration months for index option classes be effective immediately upon filing with the Commission pursuant to Section 19(b)(3)(A) of the Act. Presently, the Exchange's index option contracts may expire at three-month intervals or in consecutive months, with up to six expiration months outstanding and none of these further out than twelve months.[3] The CBOE proposal does not alter the existing expiration month procedure but instead codifies the Exchange's authority to change the arrangement of expiration months consistent with Commission approval.[4]

(2) Basis

The Exchange believes that the proposed rule change is consistent with Section 6(b) of Act, in general, and furthers the objectives of Section 6(b)(5), in particular, in that it is designed to promote just and equitable principles of trade and to protect investors and the public interest.

B. Self-Regulatory Organization's Statement on Burden on Competition

The CBOE does not believe that the proposed rule change will impose any inappropriate burden on competition.

C. Self-Regulatory Organization's Statement on Comments on the Proposed Rule Change Received from Members, Participants or Others

No written comments were solicited or received with respect to the proposed rule change.

III. Date of Effectiveness of the Proposed Rule Change and Timing for Commission Action

Within 35 days of the date of publication of this notice in the **Federal Register** or within such longer period (i) as the Commission may designate up to 90 days of such date if it finds such longer period to be appropriate and publishes its reasons for so finding or (ii) as to which the self-regulatory organization consents, the Commission will:

(a) By order approve such proposed rule change, or

(b) Institute proceedings to determine whether the proposed rule change should be disapproved.

IV. Solicitation of Comments

Interested persons are invited to submit written data, views and arguments concerning the foregoing. Persons making written submissions should file six copies thereof with the Secretary, Securities and Exchange Commission, 450 Fifth Street, NW., Washington, DC 20549. Copies of the submission, all subsequent amendments, all written statements with respect to the proposed rule change that are filed with the Commission, and all written communications relating to the proposed rule change between the Commission and any person, other than those that may be withheld from the public in

[1] The CBOE first submitted the filing on June 26, 1992, but amended it on July 16, 1992. These amendments, which are incorporated in this notice, relate to the expiration dates of QIXs, the scope of the Exchange's filing, and position and exercise limits applicable to QIXs.

[2] See Securities Exchange Act Release No. 23257 (May 29, 1986), 51 FR 19434.

[3] The instant proposal only impacts the CBOE's twelve-month or less index option contracts. The CBOE, however, lists and trades long-term index options named "LEAPS" that expire up to 36 months from the date of issuance. Under CBOE Rule 5.8, the Exchange is granted the authority to list index options that expire up to 36 months from issuance with an additional six expiration months.

[4] See supra note 2.

accordance with the provisions of 5 U.S.C. 552, will be available for inspection and copying in the Commission's Public Reference Section, 450 Fifth Street, NW., Washington, DC 20549. Copies of such filing will also be available for inspection and copying at the principal office of the CBOE. All submissions should refer to the file number in the caption above and should be submitted by September 8, 1992.

For the Commission, by the Division of Market Regulation, pursuant to delegated authority.

Margaret H. McFarland,

Deputy Secretary.

[FR Doc. 92-19638 Filed 8-17-92; 8:45 am]

BILLING CODE 8010-01-M

[Release No. 34-31019; File No. SR-NASD-92-22]

Self-Regulatory Organizations; Notice of Proposed Rule Change by National Association of Securities Dealers, Inc. Relating to an Exemption From Free-Riding and Withholding for Securities of Issuers That Wholly Own a Member Firm

August 11, 1992.

Pursuant to section 19(b)(1) of the Securities Exchange Act of 1934 ("Act"), 15 U.S.C. 78s(b)(1), notice is hereby given that on June 2, 1992, the National Association of Securities Dealers, Inc. ("NASD" or "Association") filed with the Securities and Exchange Commission ("SEC" or "Commission") the proposed rule change as described in Items I, II, and III below, which Items have been prepared by the NASD. The Commission is publishing this notice to solicit comments on the proposed rule change from interested persons.

I. Self-Regulatory Organization's Statement of the Terms of Substance of the Proposed Rule Change

Below is the text of the proposed rule change to section 13 of Schedule E of the NASD By-Laws. Proposed new language is italicized.

Schedules to the By-Laws

Schedule E

* * * * *

Section 13—Sales to Employees—No Limitations

Notwithstanding the provisions of the Board of Governors' Interpretation With Respect To "Free-Riding and Withholding," a member may sell securities issued by a member, a parent of a member, *an entity which wholly owns a member,* or by an issuer treated as a member or parent of a member under Section 9 hereof to the member's employees; potential employees resulting from an intended merger, acquisition, or other business combination of members resulting in one public successor corporation; persons associated with the member; and the immediate family of such employees or associated persons without limitation as to amount and regardless of whether such persons have an investment history with the member as required by that interpretation; provided, however, that in the case of an offering of equity securities for which a bona fide independent market does not exist, such securities shall not be sold, transferred, assigned, pledged, or hypothecated for a period of five months following the effective date of the offering.

II. Self-Regulatory Organization's Statement of the Purpose of, and Statutory Basis for, the Proposed Rule Change

In its filing with the Commission, the NASD included statements concerning the purpose of and basis for the proposed rule change and discussed any comments it received on the proposed rule change. The text of these statements may be examined at the places specified in Item IV below. The NASD has prepared summaries, set forth in Section (A), (B), and (C) below, of the most significant aspects of such statements.

A. Self-Regulatory Organization's Statement of the Purpose of, and Statutory Basis for, the Proposed Rule Change

The Interpretation of the Board of Governors—"Free-Riding and Withholding" under Article III, Section 1 of the NASD Rules of Fair Practice ("Free-Riding Interpretation")—requires NASD members to make a bona fide public distribution at the public offering price of securities in a public offering which trade at a premium in the secondary market, whenever such secondary market begins. The Free-Riding Interpretation is based on the NASD belief that failure to make a bona fide public distribution when there is a demand for an issue can be a factor in artificially raising the price at which the security trades in the secondary market. In particular, failure to make a bona fide distribution when the member may have information relating to the demand for the securities or other factors not generally known to the public, is inconsistent with high standards of commercial honor and just and equitable principles of trade and leads to an impairment of public confidence in the fairness of the investment banking and securities business.

Section 13 to Schedule E of the NASD By-Laws ("Section 13") provides an exemption from the Free-Riding Interpretation to permit an NASD member to sell certain securities in a public offering that trade at a premium in the secondary market to: the member's employees; to potential employees of the member resulting from a merger, acquisition, or other business combination of members that results in one public successor corporation; to persons associated with the member; and to the immediate family of such employees or associated persons. The exemption provided by section 13 of the Free-Riding Interpretation may only be relied on when securities are offered in a public offering by (i) the member, (ii) a parent of a member, or (iii) an issuer treated as a member or parent of a member pursuant to Section 9 of Schedule E to the NASD By-Laws.[1] Section 13 is based on the NASD belief that employees of members may naturally wish to have an ownership interest in their member-employer or its parent that is a public company and that investment by employees in their employers is beneficial to the employee/employer relationship.

Section 2(h) of Schedule E defines the term "parent" for purposes of section 13 as any entity affiliated with a member from which member the entity derives 50% or more of its gross revenues or in which it employs 50% or more of its assets. large, diversified holding companies cannot meet this definition of a parent of a member due to the fact that the activities of the broker/dealer are only a small part of their business. Employees and other associated persons of NASD member firms owned by such large holding companies are, therefore, not permitted to rely on the section 13 exemption to the Free-Riding Interpretation to purchase shares of their respective holding company in a public offering. Upon review, the NASD has determined that it would be appropriate and within the intent of section 13 and the Free-Riding Interpretation to allow employees and other section 13 associated persons of NASD members wholly-owned by large holding companies to purchase the securities offered by such entities even though the holding company does not come within the Schedule E definition of "parent." The NASD, therefore, is proposing that the section 13 exemption

---

[1] Section 9 of Schedule E provides that certain offerings that result in the issuer's affiliation or public ownership of the NASD member shall be subject to the provisions of Schedule E to the same extent as if the transaction had occurred prior to the filing of the offering.

of the Free-Riding Interpretation be expanded to provide that a member may sell the securities to its employees and other associated persons designated under section 13 when the securities are issued by an entity which wholly owns the member.

The NASD believes that the proposed rule change is consistent with the provisions of section 15A(b)(6) of the Act.[2] In pertinent part, Section 15A(b)(6) requires that the rules of a national securities association be designed to "promote just and equitable principles of trade, to foster cooperation and coordination with persons engaged in regulating, clearing and settling, processing information with respect to, and facilitating transactions in securities, to remove impediments to and perfect the mechanism of a free and open market and a national market system, and, in general, to protect investors and the public interest." The NASD believes that investment by employees in their employers is beneficial to the employee-employer relationship, and thus is in the interest of investors, and in the public interest.

B. Self-Regulatory Organization's Statement on Burden on Competition

The NASD does not believe that the proposed rule change will result in any burden on competition that is not necessary or appropriate in furtherance of the purposes of the Act, as amended.

C. Self-Regulatory Organization's Statement on Comments on the Proposed Rule Change Received from Members, Participants, or Others

Written comments were neither solicited nor received.

III. Date of Effectiveness of the Proposed Rule Change and Timing for Commission Action

Within 35 days of the date of publication of this notice in the **Federal Register** or within such longer period (i) as the Commission may designate up to 90 days of such date if it finds such longer period to be appropriate and publishes its reasons for so finding or (ii) as to which the self-regulatory organization consents, the Commission will:

A. By order approve such proposed rule change, or

B. Institute proceedings to determine whether the proposed rule change should be disapproved.

IV. Solicitation of Comments

Interested persons are invited to submit written data, views, and arguments concerning the foregoing. Persons making written submission should file six copies thereof with the Secretary, Securities and Exchange Commission, 450 Fifth Street, NW., Washington, DC 20549. Copies of the submission, all subsequent amendments, all written statements with respect to the proposed rule change that are filed with the Commission, and all written communications relating to the proposed rule change between the Commission and any person, other than those that may be withheld from the public in accordance with the provisions of 5 U.S.C. 552, will be available for inspection and copying in the Commission's Public Reference Room. Copies of such filing will also be available for inspection and copying at the principal office of the NASD. All submissions should refer to the file number in the caption above and should be submitted by September 8, 1992.

For the Commission, by the Division of Market Regulation, pursuant to delegated authority, 17 CFR 200.30–3(a)(12).

Margaret H. McFarland,

Deputy Secretary.

[FR Doc. 92–19636 Filed 8–17–92; 8:45 am]

BILLING CODE 8010–01–M

[2] 15 U.S.C. 78o–3 (1991).

[Release No. 34–31022; File No. SR–PSE–92–26]

Self-Regulatory Organizations; Notice of Filing and Order Granting Accelerated Approval of Proposed Rule Change by the Pacific Stock Exchange, Inc., Relating to an Extension of the Pacific Options Exchange Trading System Pilot Program

Pursuant to section 19(b)(1) of the Securities Exchange Act of 1934 ("Act"), 15 U.S.C. 78s(b)(1), notice is hereby given that on July 27, 1992, the Pacific Stock Exchange, Inc. ("PSE" or "Exchange") filed with the Securities and Exchange Commission ("SEC" or "Commission") the proposed rule change as described in Items I, II and III below, which Items have been prepared by the self-regulatory organization. The Commission is publishing this notice to solicit comments on the proposed rule change from interested persons.

I. Self-Regulatory Organization's Statement of the Terms of Substance of the Proposed Rule Change

The PSE proposes to extend until October 31, 1992, its automated options trading system pilot program designated as the Pacific Options Exchange Trading System ("POETS").[1]

II. Self-Regulatory Organization's Statement of the Purpose of, and Statutory Basis for, the Proposed Rule Change

In its filing with the Commission, the self-regulatory organization included statements concerning the purpose of and basis for the proposed rule change and discussed any comments it received on the proposed rule change.The text of these statements may be examined at the places specified in Item IV below. The self-regulatory organization has prepared summaries, set forth in sections (A), (B), and (C) below, of the most significant aspects of such statements.

(A) Self-Regulatory Organization's Statement of the Purpose of, and Statutory Basis for, the Proposed Rule Change

In January 1990 the Commission approved POETS on a pilot basis.[2] Subsequently, the Commission approved several Exchange proposals to extend the pilot, including most recently, a one-year extension through July 31, 1992.[3]

Currently, the Exchange has 11 POETS connections with 21 firms and anticipates having an additional five connections before the end of 1992. The PSE represents that it has experienced no capacity problems with POETS during the current pilot extension and, in addition, that POETS availability during 1992 has been 99.99%.

The Exchange believes that POETS is a viable and effective trading system and that an uninterrupted continuation

[1] POETS is a completely automated trading system comprised of an automatic execution system, an options order routing system ("ORS"), an on-line limit order book system ("Auto-Book"), and an automatic market quote update system ("Auto-Quote"). The Commission approved the PSE's POETS system on a six-month pilot basis on January 18, 1990. See Securities Exchange Act Release No. 27633 (January 18, 1990), 55 FR 2466 (order approving File SR-PSE-89-26). The initial six-month approval expired on July 22, 1990, and was extended until October 22, 1990 in order to allow the PSE to complete installation of the system's hardware. See Securities Exchange Act Release No. 28264 (July 26, 1990), 55 FR 32172 (order approving File No. SR-SPE-90-28). In January 1991, the POETS pilot program was extended until June 30, 1991. *See* Securities Exchange Act Release No. 28778 (January 14, 1991), 56 FR 2576 (order approving File No. SR-PSE-90-36). In April 1991, the Commission approved the PSE's proposal to implement the system's automatic and semi-automatic execution features, termed "Auto-Ex" and "Semi Auto-Ex," respectively, on a floor-wide basis, and to extend the pilot until July 31, 1992. *See* Securities Exchange Act Release No. 29104 (April 18, 1991), 56 FR 19134.

[2] See *supra*, note 1 for a description of POETS.

[3] See Securities Exchange Act Release No. 29104, *supra* note 1.

of the pilot program is warranted based on the importance of maintaining the quality and efficiency of the Exchange's markets. The Exchange states that it plans to continue its evaluation of the pilot program and to advise the Commission of the results of the evaluation when the PSE seeks permanent approval of the pilot program on or before October 31, 1992.

The Exchange believes that the proposed rule change is consistent with section 6(b) of the Act, in general, and furthers the objectives of section 6(b)(5), in particular, in that the trading system promotes just and equitable principles of trade while affording protection to investors and the public interest. In addition, the Exchange believes that the proposal is consistent with section 11A(a)(1)(B) of the Act in that it facilitates an environment that serves to promote an efficient and fair marketplace, resulting in benefits to the public and to the securities industry.

(B) Self-Regulatory Organization's Statement on Burden on Competition

The Exchange does not believe that the proposed rule change will impose any burden on competition that is not necessary or appropriate in furtherance of the purposes of the Act.

(C) Self-Regulatory Organization's Statement on Comments on the Proposed Rule Change Received from Members, Participants or Others

Written comments on the proposed rule change were neither solicited nor received.

III. Date of Effectiveness of the Proposed Rule Change and Timing for Commission Action

The Exchange requests that the proposed rule change be given accelerated effectiveness pursuant to Section 19(b)(2) of the Act.

The Commission finds that the proposed rule change to extend the pilot program is consistent with the requirements of the Act and the rules and regulations thereunder applicable to a national securities exchange, and, in particular, the requirements of Section 6 thereunder.[4] In particular, the Commission finds that the extension of the pilot is consistent with Section 6(b)(5) of the Act based on the PSE's representatives that the Exchange has experienced no capacity problems with POETS during the current pilot extension and that POETS availability during 1992 has been 99.99%. In addition, as the Commission has found in previous extensions of the pilot program, POETS is consistent with Section 6(b)(5) of the Act because, according to the PSE, POETS has facilitated the efficient execution of public customer market and limit orders, has facilitated trading on high volume days, and has provided the PSE's Regulation Department with more accurate trade information.[5] The Commission continues to believe that the enhanced efficiency of order processing resulting from POETS should help the PSE to provide deeper, more liquid and more efficient options markets. Moreover, POETS should allow the Exchange to develop more accurate and timely audit trails, thereby helping the PSE to maintain the integrity of its markets.

In addition, before approving POETS on a permanent basis, or extending it further on a pilot basis, the Commission expects the PSE to submit a full pilot report providing detailed statistics on POETS usage and the operation of the pilot.[6] Specifically, the Commission expects that the report will address, at a minimum: (1) The extent to which member firms are using the system; (2) the amount of order flow that is being routed through the system; (3) the amount of order flow that is being executed through the system; (4) any complaints received by the Exchange regarding the operation of the pilot; (5) any disciplinary action taken by the Exchange against a member or member organization as a result of their activities involving the system; (6) the impact of the system on the efficiency of order execution on the PSE; (7) the impact of the systems on the Exchange's ability to conduct market surveillance; and (8) any significant failures or outages.

The Commission finds good cause for approving the extension of the pilot prior to the thirtieth day after the date of publication of notice of filing thereof in the **Federal Register** in order to permit the uninterrupted continuation of the pilot program. In addition, because there have been no adverse comments concerning the pilot program since its implementation or prior to the Commission's approval of POETS in January 1990 and because of the importance of maintaining the quality and efficiency of the PSE's options markets, the Commission believes good cause exists to approve the extension of the pilot program on an accelerated basis.

IV. Solicitation of Comments

Interested persons are invited to submit written data, views and arguments concerning the foregoing. Persons making written submissions should file six copies thereof with the Secretary, Securities and Exchange Commission, 450 Fifth Street, NW., Washington, DC 20549. Copies of the submission, all subsequent amendments, all written statements with respect to the proposed rule change that are filed with the Commission, and all written communications relating to the proposed rule change between the Commission and any person, other than those that may be withheld from the public in accordance with the provisions of 5 U.S.C. 552, will be available for inspection and copying at the Commission's Public Reference Section, 450 Fifth Street, NW., Washington, DC. Copies of such filing will also be available for inspection and copying at the principal office of the above-mentioned self-regulatory organization. All submissions should refer to the file number in the caption above and should be submitted by September 8, 1992.

It is therefore ordered, pursuant to section 19(b)(2) of the Act,[7] that the proposed rule change (SR–PSE–92–26) relating to an extension of the POETS pilot program until October 31, 1992, is approved.

For the Commission, by the Division of Market Regulation, pursuant to delegated authority.

Margaret H. McFarland,

Deputy Secretary.

[FR Doc. 92–19635 Filed 8–11–92; 8:45 am]

BILLING CODE 8010–01–M

[4] 15 U.S.C. 78f(b)(5) (1982).

[5] In its July 1990 request to extend the pilot program, the PSE represented that POETS had benefited Exchange members and public investors as follows: (1) by providing faster order turnaround time; (2) by providing better tracking of orders for members, member firms and Exchange staff due to the ability of POETS to retain large amounts of order and transaction information; (3) by facilitating trading during periods of high activity due to the ability of POETS to adjust to market fluctuations by upgrading its capability while on-line; and (4) by providing the Exchange's Regulation Department with more accurate trade data and information. See Securities Exchange Act Release No. 28284, *supra* note 1. See also Securities Exchange Act Release Nos. 28778 and 29104, *supra* note 1.

[6] In order to properly evaluate the pilot for permanent approval, we would expect the PSE to submit its report on the pilot at least six weeks prior to the pilot's expiration.

[7] 15 U.S.C. § 78s(b)(2) (1982).

Self-Regulatory Organizations; Applications for Unlisted Trading Privileges and of Opportunity for Hearing; Boston Stock Exchange, Incorporated

August 12, 1992.

The above named national securities exchange has filed applications with the

Securities and Exchange Commission ("Commission") pursuant to section 12(f)(1)(B) of the Securities Exchange Act of 1934 and Rule 12f-1 thereunder for unlisted trading privileges in the following securities:

Aracruz Cellulose S.A.
American Depository Shares, No Par Value (File No. 7-8919)
Devon Energy Corp.
Common Stock, $.10 Par Value (File No. 7-8919)
Fabri-Centers of America, Inc.
Common Stock, No Par Value (File No. 7-8920)
MacFrugal's Bargains
Common Stock, $.028 Par Value (File No. 7-8921)
Patriot Premium Dividend Fund II
Common Stock, No Par Value (File No. 7-8922)

These securities are listed and registered on one or more other national securities exchange you are reported in the consolidated transaction reporting system.

Interested persons are invited to submit on or before September 2, 1992, written data, views and arguments concerning the above-referenced application. Persons desiring to make written comments should file three copies thereof with the Secretary of the Securities and Exchange Commission, 450 5th Street, NW., Washington, DC 20549. Following this opportunity for hearing, the Commission will approve the application if it finds, based upon all the information available to it, that the extensions of unlisted trading privileges pursuant to such applications are consistent with the maintenance of fair and orderly markets and the protection of investors.

For the Commission, by the Division of Market Regulation, pursuant to delegated authority.

Jonathan G. Katz,

Secretary.

[FR Doc. 92-19630 Filed 8-17-92; 8:45 am]

BILLING CODE 8010-01-M

Self-Regulatory Organizations; Applications for Unlisted Trading Privileges and of Opportunity for Hearing; Midwest Stock Exhange, Inc.

August 12, 1992.

The above named national securities exchange has filed applications with the Securities and Exchange Commission ("Commission") pursuant to section 12(f)(1)(B) of the Securities Exchange Act of 1934 and Rule 12f-1 thereunder for unlisted trading privileges in the following securities:

Applied Power, Inc.
Class A Common Stock, $.20 Par Value (File No. 7-8899)
CNL Realty Investors, Inc.
Common Stock, $.01 Par Value (File No. 7-8900)
American Medical Response, Inc.
Common Stock, $.01 Par Value (File No. 7-8901)
Enron Liquids Pipeline, L.P.
Common Units Representing Limited Parthnership Interests (File No. 7-8902)
Omega Healthcare Investors, Inc.
Common Stock, $.01 Par Value (File No. 7-8903)
Tadiran Limited
Ordinary Shares, NIS 6.2 Par Value (File No. 7-8904)

These securities are listed and registered on one or more other national securities exchange and is reported in the consolidated transaction reporting system.

Interested persons are invited to submit on or before September 2, 1992, written data, views and arguments concerning the above-referenced application. Persons desiring to make written comments should file three copies thereof with the Secretary of the Securities and Exchange Commission, 450 Fifth Street, NW., Washington, DC 20549. Following this opportunity for hearing, the Commission will approve the application if it finds, based upon all the information available to it, that the extensions of unlisted trading privileges pursuant to such application is consistent with the maintenance of fair and orderly makets and the protection of investors.

For the Commission, by the Division of Market Regulation, pursuant to delegated authority.

Jonathan G. Katz,

Secretary.

[FR Doc. 92-19632 Filed 8-17-92; 8:45 am]

BILLING CODE 8010-01-M

Self-regulatory Organizations; Applications for Unlisted Trading Privileges and of Opportunity for hearing; Pacific Stock Exchange, Incorporated

August 12, 1992.

The above named national securities exchange has filed applications with the Securities and Exchange Commission ("Commission") pursuant to section 12(f)(1)(B) of the Securities Exchange Act of 1934 and Rule 12f-1 thereunder for unlisted trading privileges in the following securities:

ACM Government Securities Fund, Inc.
Common Stock, $.01 Par Value (File No. 7-8892)
Brinker International, Inc.
Common Stock, $.10 Par Value (File No. 7-8893)
Columbia Laboratories, Inc.
Common Stock, $.01 Par Value (File No. 7-8894)
Pilgrim Prime Rate Trust
Shares of Beneficial Interest, No Par Value (File No. 7-8895)
Prime Hospitality Corp.
Common Stock, $.01 Par Value (File No. 7-8896)
Blackrock Investment Quality Term Trust, Inc.
Common Stock, $.01 Par Value (File No. 7-8897)
Delta Air Lines, Inc.
Depositary Shares, Series C Cumulative Convertible;
Depositary Preferred (File No. 7-8898)

These securities are listed and registered on one or more other national securities exchange and are reported in the consolidated transaction reporting system.

Interested persons are invited to submit on or before September 2, 1992, written data, views and arguments concerning the above-referenced application. Persons desiring to make written comments should file three copies thereof with the Secretary of the Securities and Exchange Commission, 450 5th Street, NW., Washington, DC 20549. Following this opportunity for hearing, the Commission will approve the application if it finds, based upon all the information available to it, that the extensions of unlisted trading privileges pursuant to such applications are consistent with the maintenance of fair and orderly markets and the protection of investors.

For the Commission, by the Division of Market Regulation, pursuant to delegated authority.

Jonathan G. Katz,

Secretary.

[FR Doc. 92-19633 Filed 8-17-92; 8:45 am]

BILLING CODE 8010-01-M

Self-Regulatory Organizations; Applications for Unlisted Trading Privileges and of Opportunity for Hearing; Philadelphia Stock Exchange, Inc.

August 12, 1992.

The above named national securities exchange has filed applications with the Securities and Exchange Commission ("Commission") pursuant to section 12(f)(1)(B) of the Securities Exchange Act of 1934 and Rule 12f-1 thereunder for unlisted trading privileges in the following securities:

Smith Barney Municipal Fund, Inc.
Common Stock, $.001 Par Value (File No. 7-8905)
Indresco, Inc.

Common Stock When Issued, $.25 Par Value(File No. 7–8906)
Applied Power, Inc.
Common Stock, $.20 Par Value (File No. 7–8907)
American Medical Response, Inc.
Common Stock, $.01 Par Value (File No. 7–8908)
Team, Inc.
Common Stock, $.030 Par Value (File No. 7–8909)
Omega Healthcare Investor, Inc.
Common Stock, $.10 Par Value (File No. 7–8910)
Tadiran Limited
Ordinary Shares 6.2 Par Value (File No. 7–8911)
Hallwood Group, Inc.
Common Stock, $.10 Par Value (File No. 7–8912)
Excelsior Income Shares, Inc.
Common Stock, $.01 Par Value (File No. 7–8913)
Orion Capital Corporation
$2.125 Cum. Conv. Exch. Pfd., $1.00 Par Value (File No. 7–8914)
Pacific American Income Shares, Inc.
Common Stock, $.01 Par Value (File No. 7–8915)
Sequa Corporation
Class A Common Stock, No Par Value (File No. 7–8916)
Primerica Corporation
Depositary Shares, Cum. Pfd Series A $1 Par Value (File No. 7–8917)

These securities are listed and registered on one or more other national securities exchanges and are reported in the consolidated transaction reporting system.

Interested persons are invited to submit on or before September 2, 1992, written data, views and arguments concerning the above-referenced application. Persons desiring to make written comments should file three copies thereof with the Secretary of the Securities and Exchange Commission, 450 5th Street, NW., Washington, DC 20549. Following this opportunity for hearing, the Commission will approve the application if it finds, based upon all the information available to it, that the extensions of unlisted trading privileges pursuant to such applications are consistent with the maintenance of fair and orderly markets and the protection of investors.

For the Commission, by the Division of Market Regulation, pursuant to delegated authority.

Jonathan G. Katz,

Secretary.

[FR Doc. 92–19631 Filed 8–17–92; 8:45 am]

BILLING CODE 8010–01–M

[Rel. No. IC–18891; File No. 812–7887]

The Manufacturers Life Insurance Company of America, et al.

August 11, 1992.

AGENCY: Securities and Exchange Commission ("SEC" or "Commission").

ACTION: Notice of application for an order under the Investment Company Act of 1940 ("1940 Act").

APPLICANTS: The Manufacturers Life Insurance Company of America (the "Company"), Separate Account Four of The Manufacturers Life Insurance Company of America ("Separate Account Four") and ManEquity, Inc. (the "Underwriter") (collectively, the "Applicants").

RELEVANT 1940 ACT SECTIONS: Order requested under Section 6(c) of the 1940 Act exempting Applicants from the provisions of Sections 27(a)(1), 27(c)(2) and 27(h)(1) of the 1940 Act and paragraph (c)(4)(v) of Rule 6e–3(T) thereunder.

SUMMARY OF APPLICATION: Applicants seek an order to permit them to make deductions from premium payments received in connection with certain individual flexible premium variable life insurance policies for the federal tax liability incurred by the Company as a result of its receipt of such premiums.

FILING DATE: The application was filed on March 12, 1992.

HEARING OR NOTIFICATION OF HEARING: An order granting the application will be issued unless the Commission orders a hearing. Interested persons may request a hearing on the application by writing to the Secretary of the SEC and serving Applicants with a copy of the request, personally, or by mail. Hearing requests must be received by the SEC by 5:30 p.m. on September 8, 1992 and should be accompanied by proof of service on Applicants in the form of an affidavit or, for lawyers, by certificate. Hearing requests should state the nature of the interest, the reasons for the request and the issues contested. Persons may request notification of the date of a hearing by writing to the SEC.

ADDRESSES: Secretary, SEC, 450 5th Street, NW., Washington, DC 20549. The Company and Separate Account Four, 1600 Market Street, Philadelphia, PA 19103. The Underwriter, 200 Bloor Street East, Toronto, Ontario, Canada M4W 1E5.

FOR FURTHER INFORMATION CONTACT: Joyce M. Pickholz, Attorney, at (202) 272–3046 or Wendell M. Faria, Deputy Chief, at (202) 272–2060, Office of Insurance Products, (Division of Investment Management).

SUPPLEMENTARY INFORMATION: Following is a summary of the application. The complete application is available for a fee from the SEC's Public Reference Branch.

Applicants' Representations

1. The Company is a stock life insurance company organized under the laws of Pennsylvania on April 11, 1977. It is a wholly-owned subsidiary of The Manufacturers Life Insurance Company of Michigan, which in turn is a wholly-owned subsidiary of The Manufacturers Life Insurance Company ("Manufacturers Life"), a mutual life insurance company based in Toronto, Canada.

2. The Company established Separate Account Four on March 17, 1987, as a separate account under Pennsylvania law. Separate Account Four holds assets that are segregated from all of the Company's other assets, and separate account assets equal to reserves and other separate account liabilities may not be charged with liabilities which arise from any other business the Company conducts. Separate Account Four is used to support the Company's variable life insurance policies that may be described either as flexible premium variable life insurance policies or as variable universal life insurance policies (the "VUL Policies"). Separate Account Four is registered with the Commission as a unit investment trust (File No. 811–5130). Separate Account Four currently has six sub-accounts, each of which invests in the shares of one of the six portfolios that presently comprise the Manulife Series Fund, Inc., a registered open-end management investment company.

3. The Underwriter is an indirect wholly-owned subsidiary of Manufacturers Life. The Underwriter acts as the principal underwriter for variable life insurance and variable annuity contracts issued by the Company. The Underwriter is registered as a broker-dealer under the Securities Exchange Act of 1934 and is a member of the National Association of Securities Dealers, Inc. VUL Policies are sold by registered representatives of either the Underwriter or other broker-dealers having distribution agreements with the Underwriter.

4. The Company, through Separate Account Four, now offers certain VUL Policies to the public pursuant to an offering registered under the Securities Act of 1933 (the "1933 Act") (File No. 33–13774) (the "Old VUL Policies"). The Company also intends to offer other VUL Policies through a new offering to be registered under the 1933 Act and

may in the future offer additional VUL Policies through Separate Account Four or other similar separate accounts. The VUL Policies other than the Old VUL Policies are referred to herein as the "New VUL Policies."

5. In connection with offering any New VUL Policies, Applicants propose to make certain deductions from premium payments received in the approximate amount of any increase in the Company's federal tax obligations that are based upon those premiums. No such deductions will be made in connection with the Old VUL Policies.

6. In the Omnibus Budget Reconciliation Act of 1990 ("OBRA"), Congress increased insurance company tax revenues by adopting Section 848 of the Internal Revenue Code of 1986 (the "Code"), which, in relevant part, requires insurance companies to capitalize (and deduct over a period of ten years) a percentage of its deductions, all of which formerly would have been deductible in the current tax year. The amount of deductions that would have to be amortized over ten years rather than deducted in the year incurred is based solely upon "net premiums" received in connection with certain types of insurance contracts. "Net premiums" for a type of contract is defined in section 848 of the Code as gross premiums received by the insurance company on such contracts minus return premiums on such contracts and minus premiums paid by the insurance company for reinsurance of its obligations under such contracts. Because the Company will not pay return premiums on the VUL Policies and would reinsure its obligations under a VUL Policy outside the Manufacturers group of companies only to the extent that the Policy's face amount exceeded $7.5 million, it is reasonable to assume that virtually the entire amount of any VUL Policy premiums received would constitute "net premiums," as that phrase is used in section 848.

7. The Applicants assert that the action taken by Congress has virtually the same economic impact as an explicit federal premium tax. The more premium dollars the insurance company receives, the greater will be the amount of its deductions that it would be forced to capitalize (and deduct over a period of ten years rather than immediately) and thus the greater will be its income tax liability for the current year. The fewer premium dollars the company receives, the less will be the amount of its deductions that it must capitalize and the less will be its income tax liability for the current year. Thus, in economic reality, section 848 imposes a federal premium tax.

8. The amount of general deductions that mut be capitalized varies, depending upon the type of contract to which the premiums received relate, according to a schedule set forth in section 848. The VUL Policies would be classified as individual life insurance contracts for purposes of section 848.

Accordingly, Section 848 would require an amount of the Company's general deductions equal to 7.7% of VUL Policy premiums received during the year to be capitalized.

9. For each $1000 of premiums received in connection with the VUL Policies, section 848 requires the Company to capitalize $77 of its general deductions, regardless of the source of those deductions. Pursuant to section 848(a)(2), only $3.85 of the $77 could be deducted in the current year, thus exposing the remainder to immediate taxation at the corporate tax rate of 34%. As a result, the Company would owe $24.87 more in taxes for the current year than before the OBRA tax changes, solely due to having received the $1000 of VUL Policy premiums.

10. The ultimate cost to the Company would be less than the full amount of the increased tax liability for the current years, because the Company could deduct the remaining $73.15 in its subsequent ten years' returns. However, when estimating the economic impact of the tax increase, the benefit to the Company of future tax deductions must be discounted, so that only the present value of those future deductions would be compared to the $24.87 of increased tax obligation. It is the Company's business judgment that a rate of 9.68% is an appropriate discount rate. That rate represents a simple average of the composite, long-term Treasury bond rates for the past ten years (as of November 29, 1991). Using a 9.68% discount rate, the present value of the Company's increased tax obligation caused by receipt of $1000 of VUL Policy premium payment would be $9.08, or 9.908% of that premium payment.

11. Amounts added to premiums to pay federal income taxes are not themselves tax-deductible and thus would represent increased taxable income to the Company. Accordingly, in order to charge for the full impact of the new federal tax on the Company, the Company must charge enough more than .908% to cover the increased taxable income created by the charge itself. To achieve this result, the charge would need to be 1.38%.

12. Based on prior experience, the Company believes that it is reasonable to project that virtually all future deductions will be useful. It is the Company's judgment that a charge of 1.25% would reimburse it for most of the impact of the new tax liabilities created by section 848. That amount is identical to the amount charged for such tax liabilities by certain of the Company's competitors (who presumably treat the deduction as sales load for purposes of measuring compliance with the sales load restrictions of the 1940 Act and the rules thereunder). By deducting 1.25% of VUL Policy premiums received, the Company will thus be deducting no more than the approximate amount of its increased tax liability caused by receipt of those premiums.

Applicants' Legal Analysis and Conditions

1. Separate Account Four is, and any similar separate account of the Company created in the future will be, regulated under the 1940 Act as if it were the issuer of periodic payment plan certificates. Accordingly, Separate Account Four (and any future similar separate account), the Company (as the depositor for the separate account) and the Underwriter (as principal underwriter of the VUL Policies) are deemed to be subject to Section 27 of the 1940 Act.

2. Applicants request a Commission order granting relief from the provisions of section 27(a)(1), 27(c)(2), 27(h)(1) and paragraph (c)(4)(v) of Rule 6e-3(T) to the extent necessary to permit deductions to be made from payments received in connection with flexible premium variable life insurance policies of the Company issued through Separate Account Four or other similar separate accounts of the Company, in an amount approximately equal to or less than the Company's increased federal tax liability created by its receipt of such premium payments, and without treating such deduction as deductions for sales load.

3. Sections 27(a)(1) and 27(h)(1) of the 1940 Act limit sales load on periodic payment plan certificates to 9% of total payments to be made. Section 27(c)(2) of the 1940 Act, in effect prohibits deductions from payments received under a periodic payment plan other than amounts deducted for sale load. Rule 6e-3(T)(c)(4)(v) excludes from the definition of sales load a deduction for state premium taxes.

4. Rules 6e-3(T) provides a broad range of exemptive relief for the offering of flexible premium variable life insurance policies such as the VUL Policies, including relief from each of the paragraphs of section 27 from which

exemptive relief is sought in the application. Rule 6e-3(T)(b)(13)(iii)(E) provides exemptive relief to deduct from premium payments amounts to be use to pay taxes incurred as a result of receipt of those premium payments without regard to whether the taxes are imposed by states or by other governmental entities. The relief from section 27(c)(2) sought in this application is requested only to preclude the possibility that the deductions proposed might be deemed not to be entitled to the exemptive relief provided by Rule 6e-3(T)(b)(13)(iii)(E), based on the argument that Section 848 of the Code does not purport to impose a tax on life insurance companies.

5. Further, the literal wording of Rule 6e-3(T)(c)(4)(v) would appear to require deductions for federal tax obligations caused by the receipt of premiums to be treated as sales load. Therefore, an exemption from Rule 6e-3(T)(c)(4)(v) is requested to permit the deductions to be made without treating the deductions as if they were used to pay sales and distribution expenses. The relief requested under sections 27(a)(1) and 27(h)(1) is identical to that provided by Rule 6e-3(T) in connection with deductions for state premium taxes.

6. Applicants assert that it is reasonable to characterize the deduction as one for premium or other taxes. Also, according to Applicants, the propriety of making a deduction from variable life insurance premiums for taxes payable by the life insurance company on the basis of premiums received and of excluding such a deduction from sales load is the same, regardless of whether the taxing entity is a state or the federal government. Premium tax deductions have been considered by the Commission in connection with the adoption of Rules 6e-2 and 6e-3(T), in each case the Commission permitted the deduction for premium taxes and permitted the deduction to be treated as other than sales load. Applicants submit that there is no logical reason that deductions made to pay federal taxes should be treated as part of sales load, nor is there any language in the releases in which the Commission adopted or amended Rule 6e-3(T) which suggests such a result was intended. Further, the Applicants assert that nothing in the releases dealing with Rule 6e-3(T) suggests that the exclusion of premium tax deductions from the definition of sales load was based on the type of governmental entity imposing such taxes.

7. Preventing excess sales loads from being charged in connection with the sale of periodic payment plan certificates is the policy that underlies the provisions of Section 27 that limit such sales loads. According to the Applicants, treating as sales load amounts that are used to pay taxes incurred as a result of receipt of insurance premiums rather than used to pay sales commissions or other costs of distribution does not further this legislative process.

8. Section 2(a)(35) of the 1940 Act excludes from "sales load" amounts deducted from payments for issue taxes, or administrative expenses or fees which are not properly chargeable to sales or promotional activities. Applicants state that issue taxes incurred as a result of selling an investment company security would be similar to premium taxes incurred as a result of the sale of a variable life insurance policy. This suggests that it is consistent with the 1940 Act's policies to exclude from the definition of "sales load" in Rule 6e-3(T) deductions made to pay federal tax obligations incurred as a result of receipt of premiums.

9. According to Applicants, the exclusion from the section 2(a)(35) definition of sales load of administrative expenses or fees that are "not properly chargeable to sales or promotional activities" suggests that only deductions that are properly chargeable to such activities are intended to fall within the definition of sales load. As the proposed deductions will be used to pay federal taxes and are not properly chargeable to sales or promotional activities, that language is another indication that not treating such deductions as sales load is consistent with the policies of the 1940 Act.

Conclusion

Applicants submit that for the reasons and upon the facts set forth above, the requested exemptions from sections 27(a)(1), 27(c)(2) and 27(h)(1) of the 1940 Act and paragraph (c)(4)(v) of Rule 6e-3(T) thereunder to permit the Company to deduct 1.25% of premium payments under the New VUL Contracts meet the standards in Section 6(c) of the 1940 Act. In this regard, Applicants assert that granting the relief requested in this application would be appropriate in the public interest and consistent with the protection of investors and the purposes fairly intended by the policy and provisions of the 1940 Act.

For the Commission, by the Division of Investment Management, under delegated authority.

Margaret H. McFarland,

Deputy Secretary.

[FR Doc. 92-19634 Filed 8-17-92; 8:45 am]

BILLING CODE 8010-01-M

DEPARTMENT OF STATE

[Public Notice 1674]

Statutory Debarment Under the International Traffic in Arms Regulations

AGENCY: Department of State.

ACTION: Notice.

SUMMARY: Notice is hereby given of which persons have been statutorily debarred pursuant to § 127.6(c) of the International Traffic in Arms Regulations (ITAR) (22 CFR parts 120-130).

EFFECTIVE DATE: July 23, 1992.

FOR FURTHER INFORMATION CONTACT: Clyde G. Bryant Jr., Chief, Compliance Analysis Division, Office of Defense Trade Controls, Department of State (703-875-6650).

SUPPLEMENTARY INFORMATION: Section 38(g)(4)(A) of the Arms Export Control Act (AECA) prohibits the issuance of export licenses to a person, or any party to the export, who has been convicted of violating certain U.S. criminal statutes, including the AECA. The term "person" means a natural person as well as a corporation, business association, partnership, society, trust, or any other entity, organization, or group, including governmental entities. The term "party to the export" means the president, the chief executive officer, and other senior officers of the license applicant; the freight forwarders or designated exporting agent of the license applicant; and any consignee or end user of any item to be exported. The statute permits certain limited exceptions to this prohibition to be made on a case-by-case basis.

Section 127.6 of the ITAR authorizes the Assistant Secretary of State for Politico-Military Affairs to prohibit certain persons convicted of violating or conspiracy to violate the AECA from participating directly or indirectly in the export of defense articles or in the furnishing of defense services.

Such a prohibition is referred to as a statutory debarment, which may be imposed on the basis of judicial proceedings that resulted in a conviction for violating, or of conspiring to violate, the AECA. See 22 CFR 127.6(c). The period for debarment will normally be three years. The ITAR provides the Assistant Secretary with discretion to determine an alternative period of time for debarment. At the end of the debarment period, licensing privileges may be reinstated at the request of the debarred person following the necessary interagency consultations, after a

thorough review of the circumstances surrounding the conviction and a finding that appropriate steps have been taken to mitigate any law enforcement concerns, as section required by section 38(g)(4) of the AECA.

Statutory debarment is based solely upon the outcome of a criminal proceeding, conducted by a court of the United States, that established guilt beyond a reasonable doubt in accordance with due process. Thus, the procedures of part 128 of the ITAR that apply to administrative debarment are not applicable in such cases.

During the period of statutory debarment the Department of State will not consider applications for licenses or requests for approvals that involve any person or any part to the export who has been convicted of violating the AECA, or of conspiracy to violate the AECA. Persons who have been statutorily debarred may appeal to the Under Secretary for International Security Affairs for reconsideration of the ineligibility determination. A request for reconsideration must be submitted in writing within 30 days after a person has been informed of the adverse decision.

The Department of State policy permits debarred persons to apply for an exception from the statutory debarment one year after the date of the debarment. Debarred persons may seek such an exception from the Director of the Office of Defense Trade Controls, in accordance with section 38(g)(4)(A) and under 22 CFR 127.6. If the exception is granted, the debarment will be suspended. Any decision to grant an exception can be made only after the statutory requirements under section 38(g)(4) have been satisfied.

Pursuant to section 38(g)(4)(A) of the AECA and § 127.6 of the ITAR, the Assistant Secretary for Politico-Military Affairs has debarred five persons who have been convicted of violating the AECA, or of conspiracy to violate the AECA.

These persons have been debarred for a three year period following their conviction, and have been so notified by a letter from the Office of Defense Trade Controls. Pursuant to § 127.6(c) of the ITAR, the names of these persons (and their offense, date of conviction(s) and court of conviction(s)) are being published in the Federal Register. Anyone who requires additional information to determine whether a person has been debarred should contact the Office of Defense Trade Controls.

This notice involves a foreign affairs function of the United States and is thus excluded from the procedures of 5 U.S.C. 553 and 554 and Executive Order 12291 (44 FR 13193). It implements statutory and regulatory requirements that entered into force on December 22, 1987 and April 4, 1988, respectively.

In accordance with these authorities the following persons are debarred for a period of three years following their conviction for violating, or conspiring to violate, the AECA (name/ offense/ date/ court):

1. Dilligas Trading Co., Inc., 22 U.S.C. 2778(b)(1)(A), December 13, 1991, Eastern District of Virginia
2. George R. Mitchell, 22 U.S.C. 2778, 22 CFR parts 123 and 127.1 and 18 U.S.C. 2, January 17, 1992, District of Maryland
3. Novacom, Inc., 22 U.S.C. 2778(b)(1)(A), December 13, 1991, Eastern District of Virginia
4. Pan Aviation, Inc., 18 U.S.C. 371 (conspiracy to violate 22 U.S.C. 2778), 22 U.S.C. 2778(b)(2), 22 U.S.C. 2778(c), 22 CFR part 127.02 and 127.01(c), 18 U.S.C. 1001, January 23, 1992
5. Sarkis G. Soghanalian, 18 U.S.C. 371 (conspiracy to violate 22 U.S.C. 2778), 22 U.S.C. 2778(b)(2), 22 U.S.C. 2778(c), 22 CFR parts 127.01, 127.02 and 127.01(c), 18 U.S.C. 2, 18 U.S.C. 1001 and 1002, January 29, 1992, Southern District of Florida

Dated: August 7, 1992.

William B. Robinson,

Director, Office of Defense Trade Controls, Bureau of Politico Military Affairs.

[FR Doc. 92-19557 Filed 8-17-92; 8:45 am]

BILLING CODE 4710-25-M

[Public Notice 1672]

United States Organization for the International Telegraph and Telephone Consultative Committee (CCITT) Study Group a Meeting

The Department of State announces that the U.S. Organization for the International Telegraph and Telephone Consultative Committee (CCITT) Study Group A will meet on August 27, 1992 at 9:30 a.m. in room 1912 at the Department of State, 2201 C Street NW., Washington, DC 20520.

The agenda for the meeting will include preparations for upcoming CCITT Study Groups II, III, and I international Working Party meetings scheduled for Geneva, September 14-18; September 28-October 9 (one week in Winchester, England), and October 12-16, 1992 respectively.

Members of the general public may attend the meeting and join in the discussion, subject to the instructions of the Chair. Admittance of public members will be limited to the seating available. In that regard, entrance to the Department of State building is controlled and entry will be facilitated if arrangements are made in advance of the meeting. Persons who plan to attend should advise the Office of Early Barbely, Department of State, (202) 647-0201, FAX (202) 647-7407. The above includes government and non-government attendees. Public visitors will be asked to provide their date of birth and Social Security number at the time they register their intention to attend and must carry a valid photo ID with them to the meeting order to be admitted. All attendees must use the C Street entrance.

Please bring 60 copies of documents to be considered at this meeting. If the document has been mailed, bring only 10 copies.

Dated: August 3, 1992.

Earl Barbely,

Director, Telecommunications and Information Standards, Chairman U.S. CCITT National Committee.

[FR Doc. 92-19545 Filed 8-17-92; 8:45 am]

BILLING CODE 4710-45-M

[Public Notice 1673]

U.S. Organizations for the International Radio Consultative Committee (CCIR) and International Telegraph and Telephone Committee (CCITT) Meeting

The Department of State announces that the U.S. Organizations for the International Radio Consultative Committee (CCIR National Committee) and International Telegraph and Telephone Committee (CCITT National Committee) will hold a joint open meeting, September 1, 1992 at the Department of State, 2201 C Street NW, Washington, DC in room 1912 commencing at 9:30 a.m.

The CCIR and CCITT are permanent organs of the International Telecommunications Union (ITU), a specialized agency of the United Nations, established by the International Telecommunications Convention.

The agenda for the meeting will consist of a review of the current status of issues related to mobile communications services, (i.e. FPLMTS, UPT, PCS etc.) that impact U.S. activities within the CCIR and CCITT. Consideration will be given to the possibility of establishing a joint CCIR/ CCITT coordination group which will provide guidance and direction to the Department of State in its treatment of these issues in the International Telecommunications Union.

Entrance to the Department of State is controlled but can be facilitated by making attendance arrangements in advance. Persons planning to attend the meeting should so advise this office at: (202) 647-0201, (fax 202 647-7407) no later than two days before the meeting. Notification should include name, date of birth and Social Security number. All attendees must use the C Street entrance.

Dated: August 4, 1992.

Warren G. Richards,

Chairman, U.S. CCIR National Committee.

Earl Barbely,

Chairman, U.S. CCITT National Committee.

[FR Doc. 92-19544 Filed 8-17-92; 8:45 am]

BILLING CODE 4710-45-M

DEPARTMENT OF TRANSPORTATION

Federal Highway Administration

Environmental Impact Statement; Crow Wing County, MN; Correction

AGENCY: Federal Highway Administration (FHWA), DOT.

ACTION: Notice of Intent (NOI); correction.

SUMMARY: The FHWA is issuing this notice to correct Notice FR Doc. 92-18268, printed August 3, 1992, on Page 34162, as indicated above.

Issued on: August 7, 1992.

Alan J. Friesen,

Program Operations Engineer, FHWA Minnesota Division, St. Paul, Minnesota.

[FR Doc. 92-19543 Filed 8-17-92; 8:45 am]

BILLING CODE 4910-22-M

DEPARTMENT OF THE TREASURY

Office of the Secretary

List of Countries Requiring Cooperation With an International Boycott

In order to comply with the mandate of section 999(a)(3) of the Internal Revenue Code of 1986, the Department of the Treasury is publishing a current list of countries which may require participation in, or cooperation with, an international boycott (within the meaning of section 999(b)(3) of the Internal Revenue Code of 1986).

On the basis of the best information currently available to the Department of the Treasury, the following countries may require participation in, or cooperation with, an international boycott (within the meaning of section 999(b)(3) of the Internal Revenue Code of 1986).

Bahrain
Iraq
Jordan
Kuwait
Lebanon
Libya
Oman
Qatar
Saudi Arabia
Syria
United Arab Emirates
Yemen, Republic of

Dated: August 12, 1992.

Fred T. Goldberg, Jr.,

Assistant Secretary for Tax Policy.

[FR Doc. 19603 Filed 8-17-92; 8:45 am]

BILLING CODE 4810-25-M

Sunshine Act Meetings

Federal Register
Vol. 57, No. 160
Tuesday, August 18, 1992

This section of the FEDERAL REGISTER contains notices of meetings published under the "Government in the Sunshine Act" (Pub. L. 94-409) 5 U.S.C. 552b(e)(3).

BOARD OF GOVERNORS OF THE FEDERAL RESERVE SYSTEM

TIME AND DATE: 11:00 a.m., Monday, August 24, 1992.

PLACE: Marriner S. Eccles Federal Reserve Board Building, C Street entrance between 20th and 21st Streets, NW., Washington, DC 20551.

STATUS: Closed.

MATTERS TO BE CONSIDERED:

1. Personnel actions (appointments, promotions, assignments, reassignments, and salary actions) involving individual Federal Reserve System employees.
2. Any items carried forward from a previously announced meeting.

CONTACT PERSON FOR MORE INFORMATION: Mr. Joseph R. Coyne, Assistant to the Board, (202) 452–3204. You may call (202) 452–3207, beginning at approximately 5 p.m. two business days before this meeting, for a recorded announcement of bank and bank holding company applications scheduled for the meeting.

Dated: August 14, 1992.

Jennifer J. Johnson,

Associate Secretary of the Board.

[FR Doc. 92–19803 Filed 8–14–92; 3:31 pm]

BILLING CODE 6210–01–M

UNITED STATES INTERNATIONAL TRADE COMMISSION

[USITC SE–92–24]

TIME AND DATE: August 26, 1992 at 2:30 p.m.

PLACE: Room 101, 500 E Street S.W., Washington, DC 20436.

STATUS: Open to the public.

MATTERS TO BE CONSIDERED:

1. Agenda.
2. Minutes.
3. Ratification List.
4. Inv. No. 731–TA–622 (Preliminary) (Dry Film Photoresist from Japan)—briefing and vote.
5. Continuation of discussion of APO matters.
6. Any items left over from previous agenda.

CONTACT PERSON FOR MORE INFORMATION: Paul R. Bardos, Acting Secretary, (202) 205–2000.

Dated: August 12, 1992.

Paul R. Bardos,

Acting Secretary.

[FR Doc. 92–19795 Filed 8–14–92; 2:54 pm]

BILLING CODE 7020–02–M

NATIONAL TRANSPORTATION SAFETY BOARD

Public Hearing in Atlanta, Georgia: Aviation Accident

In accordance with its investigation of the aviation accident involving GP Express Airlines Flight 861, a Beech 99, at Fort McClellan, Anniston, Alabama, June 8, 1992, the National Transportation Safety Board will convene a public hearing at 1:00 p.m. (eastern daylight time), on Wednesday, September 30, 1992, in the North Ballroom of the Radisson Hotel located at 165 Courtland Street, Atlanta, Georgia. For further information contact Ted Lopatkiewicz, Office of Public Affairs, National Transportation Safety Board, 490 L'Enfant Plaza East, S.W., Washington, DC 20594, telephone (202) 382–0660.

Dated: August 14, 1992.

Bea Hardesty,

Federal Register Liaison Officer.

[FR Doc. 92–19802 Filed 8–14–92; 3:31 pm]

BILLING CODE 7533–01–M

NUCLEAR REGULATORY COMMISSION

DATE: Weeks of August 17, 24, 31, and September 7, 1992.

PLACE: Commissioners' Conference Room, 11555 Rockville Pike, Rockville, Maryland.

STATUS: Open and Closed.

MATTERS TO BE CONSIDERED:

Week of August 17

Tuesday, August 18

11:30 a.m.
Affirmation/Discussion and Vote (Public Meeting) (if needed)

Week of August 24—Tentative

Wednesday, August 26

11:30 a.m.
Affirmative/Discussion and Vote (Public Meeting) (if needed)

Week of August 31—Tenative

Tuesday, September 1

3:00 p.m.
Affirmative/Discussion and Vote (Public Meeting) (if needed)

Thursday, September 3

1:00 p.m.
Briefing by EPRI on Status of EPRI Design Requirements Document for Advanced Light Water Reactors (Public Meeting)

Week of September 7—Tentative

Tuesday, September 8

10:00 a.m.
Briefing on Advanced and Evolutionary Reactor Topics: Form and Content for a Design Certification Rule and Follow-Up to SECY–90–016 (Public Meeting) (Contact: Dennis Crutchfield, 301/504–1199)

Wednesday, September 9

3:30 p.m.
Affirmative/Discussion and Vote (Public Meeting) (if needed)

Friday, September 11

8:00 a.m.
Discussion of Management-Organization and Internal Personnel Matters (Closed—Ex. 2 and 6)

8:30 a.m.
Briefing by Charlie Meinhold on 1990 Recommendations of the International Commission on Radiological Protection (ICRP Publication 60) (Public Meeting)

10:00 a.m.
Periodic Meeting with the Advisory Committee on Reactor Safeguards (ACRS) (Public Meeting) (Contact: Raymond Fraley, 301/492–8049)

ADDITIONAL INFORMATION: By a vote of 3–0 (Commissioners Rogers and Curtiss not present) on August 12, the Commission determined pursuant to U.S.C. 552b(e) and § 9.107(a) of the Commission's rules that "Affirmation of Final Rule to Extend the Implementation Date of Revised 10 CFR Part 20, 'Standards for Protection Against Radiation' " and "Affirmation of Commission Vote to Override OMB Denial of Information Collection for 10 CFR Parts 2 and 35—Quality Management Rule" (Public Meeting) to be held on August 12 and on less than one week's notice to the public.

Note: Affirmation sessions are initially scheduled and announced to the public on a time-reserved basis. Supplementary notice is provided in accordance with the Sunshine Act as specific items are identified and added to the meeting agenda. If there is no specific subject listed for affirmation, this means that no item has as yet been identified as requiring any Commission vote on this date.

To Verify the Status of Meeting Call (Recording)—(301) 504–1292.

CONTACT PERSON FOR MORE INFORMATION: William Hill (301) 504–1661.

Dated: August 14, 1992.

William M. Hill, Jr.,

Office of the Secretary.

[FR Doc. 92-19792 Filed 8-14-92; 2:59 pm]

BILLING CODE 7590-01-M

OCCUPATIONAL SAFETY AND HEALTH REVIEW COMMISSION

TIME AND DATE: 9 a.m., Tuesday, August 11, 1992.

PLACE: Room 410, 1825 K Street, NW., Washington, DC. 20006.

STATUS: Open Meeting.

MATTERS TO BE CONSIDERED: Comments submitted pertaining to the Commission's proposed revision of certain of its Rules of Procedure published on May 12, 1992 at 57 FR 20220-20234.

CONTACT PERSON FOR MORE INFORMATION: E. Patrick, Moran, (202) 634-4015.

Dated: July 30, 1992.

E. Patrick Moran,

Deputy General Counsel.

[FR Doc. 92-19791 Filed 8-14-92; 2:51 pm]

BILLING CODE 7600-01-M

SECURITIES AND EXCHANGE COMMISSION

Agency Meetings

Notice is hereby given, pursuant to the provisions of the Government in the Sunshine Act, Pub. L. 94-409, that the Securities and Exchange Commission will hold the following meetings during the week August 17, 1992.

Closed meetings will be held on Tuesday, August 18, 1992, at 2:30 p.m., Thursday, August 20, 1992, at 2:30 p.m., and on Friday August 21, 1992, at 10:00 a.m.

Commissioners, Counsel to the Commissioners, the Secretary to the Commission, and recording secretaries will attend the closed meetings. Certain staff members who have an interest in the matters may also be present.

The General Counsel of the Commission, or his designee, has certified that, in his opinion, one or more of the exemptions set forth in 5 U.S.C. 552b(c) (4), (8), (9)(A) and (10) and 17 CFR 200.402(a) (4), (8), (9)(i) and (10), permit consideration of the scheduled matters at closed meetings.

Commissioner Beese, as duty officer, voter to consider the items listed for the closed meetings in closed session.

The subject matter of the closed meeting scheduled for Tuesday, August 18, 1992, at 2:30 p.m., will be:

Institution of injunctive actions.

Institution of administrative proceedings of an enforcement nature.

Settlement of injunctive actions.

Settlement of administrative proceedings of an enforcement nature.

The subject matter of the closed meeting scheduled for Thursday, August 20, 1992, at 2:30 p.m., will be:

Opinions.

The subject matter of the closed meeting scheduled for Friday, August 21, 1992, at 10:00 a.m., will be:

Opinions.

At times, changes in Commission priorities require alterations in the scheduling of meeting items. For further information and to ascertain what, if any, matters have been added, deleted or postponed, please contact: Walter Stahr at (202) 272-2000.

Dated: August 13, 1992.

Margaret H. McFarland,

Deputy Secretary.

[FR Doc. 92-19790 Filed 8-14-92; 2:47 pm]

BILLING CODE 8010-01-M

SECURITIES AND EXCHANGE COMMISSION

Agency Meeting

"FEDERAL REGISTER" CITATION OF PREVIOUS ANNOUNCEMENT: [57 FR 35885 August 11, 1992]

STATUS: Closed meeting.

PLACE: 450 Fifth Street, NW., Washington, DC.

DATE PREVIOUSLY ANNOUNCED: Wednesday, August 5, 1992.

CHANGE IN THE MEETING: Time change.

A closed meeting schedule for Wednesday, August 12, 1992, at 2:30 p.m., has been rescheduled for Thursday, August 13, 1992, at 2:30 p.m.

Commissioner Beese, as duty officer, determined that Commission businsss required the above change and that no earlier notice thereof was possible.

At times, changes in Commission priorities require alterations in the scheduling of meeting items. For further information and to ascertain what, if any, matters have been added, deleted or postponed, please contact: Bruce Rosenblum at (202) 272-2300.

Dated: August 12, 1992.

Margaret H. McFarland,

Deputy Secretary.

[FR Doc. 92-19793 Filed 8-14-92; 3:03 pm]

BILLING CODE 8010-01-M

Corrections

Federal Register
Vol. 57, No. 160
Tuesday, August 18, 1992

This section of the FEDERAL REGISTER contains editorial corrections of previously published Presidential, Rule, Proposed Rule, and Notice documents. These corrections are prepared by the Office of the Federal Register. Agency prepared corrections are issued as signed documents and appear in the appropriate document categories elsewhere in the issue.

DEPARTMENT OF THE TREASURY

Internal Revenue Service

26 CFR Part 1

[TD 8385]

RIN 1545-AP75

Allocations Attributable to Partnership Nonrecourse Liabilities

Correction

In rule document 91-30843 beginning on page 66978 in the issue of Friday, December 27, 1991, make the following corrections:

1. On page 66979, in the 1st column, under *I. Introduction*, in the 1st paragraph, in the 12th line, "regulation" should read "regulations".

2. On page 66980, in the 3d column, under "G. Rules For Partner Nonrecourse Debt", in the 2d paragraph, in the 14th line, after "are" remove "still".

3. On page 66981, in the first column, in the third line, after "are" insert "still".

4. On page 66981, in the 1st column, under *III. Description of Minimum Gain Chargeback Approach in the Temporary Regulations*, in the 1st paragraph, in the 13th line, "partner's" should read "partners'".

5. On page 66982, in the second column, in the last paragraph, in the third line, "But" should read "Both".

§ 1.704-2 [Corrected]

6. On page 66983, in the first column, in § 1.704-2(a), in the table of contents, (f)(2) and (f)(3) should read:

(f) * * *

(2) Exception for certain conversions and refinancings.

(3) Exception for certain captial contributions.

7. On page 66984, in the third column, in § 1.704-2(d)(4)(ii), in the seventh line, after "increases" insert "or decreases".

8. On page 66985, in the third column, in § 1.704-2(f)(7), *Example 1*, in the paragraph following the table, in the third line from the end of the paragraph,"partner's" should read "partners'".

9. On page 66986, in the first column, in § 1.704-2(g)(1)(ii), in the ninth line "§ 1.704" should read "§ 1.704-1".

10. On page 66988, in the third column, in § 1.704-2(l)(1)(iii)(A), in the ninth line, after "section" insert a closing parenthesis.

11. Section 1.704-2(m), *Example 1*, is corrected as follows:

a. On page 66989, in the second column, in the first paragraph, in the second line, "partnership" was misspelled.

b. On the same page, in the third column, in the tenth line, "(2)(ii)(*b*)(T33)" should read "(2)(ii)(*b*)(*3*)"; in the paragraph before the table, the third line from the end of the paragraph should read "allocations of these losses 90 percent to"; and in the last line of the table, columns two and three should read "$27,000" and "$3,000" respectively.

c. On page 66990, in the first column, in paragraph (i), in the last line of the table, columns two and three should read "($49,500)" and" ($5,500)", respectively, and in the undesignated paragraph following the table, in the ninth line, "the" was misspelled.

d. On the same page, in the 2d column, in paragraph (ii), in the last line of the table, columns two and three should read "($21,500)" and "($33,500)", respectively, and in the undesignated paragraph following the table, in the 16th line, "of" should read "to".

e. On the same page, in the 3d column, in paragraph (iv), in the table, in the 6th line, columns two and three should read "$32,400" and "$3,600", respectively; in paragraph (v), in the 14th line, "the" should read "that"; and in the 15th line, "700,000" should read "$700,000".

f. On page 66991, in the 1st column, in paragraph (vi), in the 10th line, "95,000" should read "$95,000"; in the 12th line, "expense" was misspelled; in the 35th line remove the first "of" appearing in the line; in the last line of the table, columns two and three should read "($144,000)" and "($16,000)", respectively; and in the undesignated paragraph following the table, in the last line, "1,000,000" should read "$1,000,000, and "550,000" should read "$550,000".

g. On the same page, in the 2d column, in the 19th line, "200,000" should read "$200,000"; in the 35th line "180,000" should read "$180,000"; in the last line of the table, columns two and three should read "($403,000)" and "($47,000)", respectively.

12. Section 1.704-2(m), *Example 3*, is corrected as follows:

a. On page 66992, in the second column, in the last line of the table, columns two and three should read "$50,000".

b. On the same page, in the third column, in the last line of the table, columns two and three should read "($35,000)".

c. On page 66993, in the first column, in paragraph (ii)(a), in the last line of the table, columns two and three should read "$100,000".

d. On the same page, in the 3d column, in paragraph (iii)(b), in the 29th line, after "agreement" insert a comma; in the table appearing in the middle of the page, in the first entry, columns two and four should read "($35,000)", and in the fourth entry, insert a solid line under columns two through six.

e. On page 66994, in paragraph (iv)(b), in the table appearing at the top of the page, in the first entry, columns two and four should read "($75,000)"; in the fourth entry, insert a solid line under columns two through seven; and in the undesignated paragraph following the table, in the ninth line, after "year" insert a comma.

f. On the same page, in paragraph (v)(b), in the table appearing in the middle of the page, in the third entry, insert a solid line under columns two through seven.

BILLING CODE 1505-01-D

DEPARTMENT OF THE TREASURY

Internal Revenue Service

26 CFR Part 301

[T.D. 8411]

RIN 1545-AH13

Definition of Resident Alien

Correction

In rule document 92-8496 beginning on page 15237, in the issue of Monday, April 27, 1992, make the following corrections:

§ 301.7701(b)-1 [Corrected]

1. On page 15243, in the third column, in § 301.7701(b)-1(e), in *Example 1.*, in the seventh line, "year. B" should read "year, B".

§ 301.7701(b)-2 [Corrected]

2. On page 15244, in the third column, in § 301.7701(b)-2(f)(1–4), column, "Form 1" should read "Form I" each place it appears.

3. On the same page, in the same column, in § 301.7701(b)-2(f)(6), in the second line, "23O" should read "230".

§ 301.7701(b)-3 [Corrected]

4. On page 15246, in the third column, in § 301.7701(b)-3(c)(2), in the fourth line, "test;" should read "test,".

§ 301.7701(b)-8 [Corrected]

5. On page 15252, in the third column, in § 301.7701(b)-8(b)(2)(ii), in the second line, "bad" should read "had".

BILLING CODE 1505-01-D

DEPARTMENT OF HEALTH AND HUMAN SERVICES

Food and Drug Administration

21 CFR Part 101

[Docket No. 91N-0162]

Food Labeling: Format for Nutrition Label

Correction

In proposed rule document 92-16942, beginning on page 32058 in the issue of Monday, July 20, 1992, make the following corrections:

1. On page 32063, in the first column, the second full paragraph is corrected to read as follows:

Also, FDA does not fully agree that giving instruction or practice with newer labels is an acceptable procedure for evaluating formats. There is no way to translate a one-on-one instruction of shopper by an interviewer in a test situation to the educational equivalent of familiarizing potential label users in the population with the features of a format. The test situation bypasses the normal real world requirements of delivering a message to the intended audience and of ensuring that it is received, is understood, and motivates the receiver to respond appropriately. The cost to achieve a comparable education effort in the real world are not estimatable but are undoubtedly very large.

2. On page 32067, in the third column, table 6 is reprinted as a full size illustration.

Table 6

MACARONI & CHEESE

NUTRITION INFORMATION PER SERVING

	In Pkg.	As Prepared	
Serving Size:	¼ box (45g)	¾ cup	
Servings per Container:	4	4	
Calories	190	290	
Calories from fat	20	120	
	PERCENT OF DAILY VALUE		**DAILY VALUE (DV) †**
Total Fat (2, 13g) #	3	17	75 g or less
Saturated fat (1, 5g)	4	20	25 g or less
Polyunsaturated fat (0, 4g)			
Monounsaturated fat (1, 4g)			
Cholesterol (10, 30mg)	3	10	300 mg or less
Total carbohydrate (31, 31g)	10	10	325 g or more
Complex carbohydrate (31, 31g)			
Sugars (0, 0g)			
Dietary fiber (0, 0g)	‡	‡	25 g
Protein (4, 5g)			50 g
Sodium (420, 660mg)	18	27	2400 mg or less
Potassium (55, 95mg)	2	3	3500 mg
Vitamin A	‡	4	
Vitamin C	‡	‡	
Calcium	8	12	
Iron	10	10	

† As part of a 2,350 calorie diet

‡ Contains less than 2 percent of the DV of this nutrient

Amount in package and as prepared

INGREDIENTS: XXXXXXXXXXXXXXXXXXXXXXXXXXXXXXXXXXXXXXXXXXXXXXXXXXXXXXXXXXXXXXXXX XXXXXXXXXXXXXXXXXXXXXXXXXXXXXXXXXXXXXXXXXXXXXXXXXXXXXXXXXXXXXXXXXXXXXXXXXXXXXXX XXXXXXXXXXXXXXXXXXXXXXXXXXXXXXXXXXXXXXXXXXXXXXXXXXXXXXXXXXXXXXXXXXXXXXXXXXXXXXX

BILLING CODE 1505-01-D

federal register

Tuesday
August 18, 1992

Part II

Environmental Protection Agency

40 CFR Part 148 et al.

Land Disposal Restrictions for Newly Listed Wastes and Hazardous Debris; Rule

ENVIRONMENTAL PROTECTION AGENCY

40 CFR Parts 148, 260, 261, 262, 264, 265, 268, 270 and 271

[FRL-4132-4]

RIN 2050-AD36

Land Disposal Restrictions for Newly Listed Wastes and Hazardous Debris

AGENCY: Environmental Protection Agency (EPA).

ACTION: Final rule.

SUMMARY: The Environmental Protection Agency (EPA) is finalizing treatment standards under the land disposal restrictions (LDR) program for certain hazardous wastes listed after November 8, 1984, pursuant to a proposed consent decree filed with the District Court that established a promulgation date of June 1992 (*EDF* v. *Reilly*, Civ. No. 89-0598, D.D.C.). EPA is also finalizing revised treatment standards for debris contaminated with listed hazardous waste or debris that exhibits certain hazardous waste characteristics (hereinafter referred to as hazardous debris), and several revisions to previously promulgated standards and requirements. These actions are being taken as part of the RCRA Reform Initiative, and are expected to facilitate implementation of the LDR program.

EFFECTIVE DATES: This final rule is effective on June 30, 1992, except for §§ 148.17(a), 260.10, 261.3(c)(2)(ii)(C), 268.2, 268.5, 268.7, 268.9, 268.36(a), 268.40, 268.41, 268.42, 268.43, 268.45, 268.46, 268.50, 270.14, 270.42, 270.72, and 271.1, which are effective November 16, 1992; and §§ 262.34, 264.110, 264.111, 264.112, 264.140, 264.142, part 264 subpart DD, 265.110, 265.111, 265.112, 265.140, 265.142, 265.221, and part 265 subpart DD, which are effective February 18, 1993.

ADDRESSES: The official record for this rulemaking is identified as Docket Number F-92-CD2F-FFFFF, and is located in the EPA RCRA Docket, room 2427, 401 M Street SW., Washington, DC 20460. The docket is open from 9 a.m. to 4 p.m., Monday through Friday, except on Federal holidays. The public must make an appointment to review docket materials by calling (202) 260-9327. A maximum of 100 pages from the docket may be copied at no cost. Additional copies cost $.15 per page.

FOR FURTHER INFORMATION CONTACT: For general information, contact the RCRA Hotline at (800) 424-9346 (toll free) or (703) 920-9810 locally. For information on treatment standards for newly listed wastes or hazardous debris, contact the Waste Treatment Branch, Office of Solid Waste (OS-322W), U.S. Environmental Protection Agency, 401 M St., SW., Washington, DC 20460, (703) 308-8434. For information on capacity determinations or national capacity variances, contact the Capacity Programs Branch, Office of Solid Waste (OS-321W), U.S. Environmental Protection Agency, 401 M Street, SW., Washington, DC 20460, (703) 308-8440.

SUPPLEMENTARY INFORMATION:

Outline

I. Background
- A. Summary of the Hazardous and Solid Waste Amendments of 1984
- B. Pollution Prevention (Waste Minimization) Benefits

II. Summary of Final Rule
- A. Newly Listed Wastes
- B. Changes to Current Regulations
- C. Hazardous Debris

III. Detailed Discussion of Final Rule: Newly Listed Wastes
- A. Recent Petroleum Refining Wastes (F037 and F038)
- B. Wastes from the Production of Unsymmetrical Dimethylhydrazine (K107, K108, K109, and K110)
- C. 2-Ethoxyethanol Wastes (U359)
- D. Wastes from the Production of Dinitrotoluene and Toluenediamine (K111 and K112, U328 and U353)
- E. Wastes from the Production of Ethylene Dibromide (K117, K118, and K136) and Wastes from the Production of Methyl Bromide (K131 and K132)
- F. Wastes from the Production of Ethylenebisdithiocarbamic Acid (K123, K124, K125, and K126)

IV. Detailed Discussion of Final Rule: Changes to Existing Regulations
- A. Revisions to the F001-F005 Spent Solvents Treatment Standards
- B. Conversion of Wastewater Standards Based on Scrubber Water
- C. Revisions to Treatment. Standards for K061, K062, and F006
- D. Vanadium: Treatment Standards and Appendix VIII
- E. Notification and Certification for Characteristic Wastes
- F. Wastes Listed Because they Exhibit a Characteristic
- G. Storage and Treatment in Containment Buildings
- H. Retrofitting Surface Impoundments Under Land Disposal Restrictions

V. Detailed Discussion of Final Rule: Hazardous Debris
- A. Overview
- B. Definitions of Debris and Hazardous Debris
- C. Treatment Standards for Hazardous Debris
- D. Exclusion of Hazardous Debris from Subtitle C Regulation
- E. Regulation of Treatment Residuals
- F. Permit Requirements for Treatment Facilities
- G. Capacity Variance for Hazardous Debris
- H. Other Issues

VI. Capacity Determinations
- A. Capacity Analysis Results Summary
- B. Available Capacity
- C. Petroleum Refining Wastes and Other Organic Wastes
- D. Required and Available Capacity for Newly Listed Wastes Mixed with Radioactive Contaminants
- E. Required and Available Capacity for Debris Contaminated with Newly Listed Wastes
- F. Capacity Determination for Underground Injected Wastes
- G. Revisions to Treatment Standards for K061, F006, and K062

VII. Implementation
- A. Facilities Qualifying for Interim Status Due to Storage of Prohibited Wastes
- B. Containment Buildings at Generator Sites
- C. Addition of Waste Management Capacity at Permitted and Interim Status Facilities
- D. Conversion of Enclosed Waste Piles to Containment Buildings at Permitted and Interim Status Facilities

VIII. State Authority
- A. Applicability of Rules in Authorized States
- B. Effect on State Authorization

IX. Regulatory Requirements
- A. Economic Impact Screening Analysis Pursuant to Executive Order 12291
- B. Regulatory Flexibility Analysis
- C. Paperwork Reduction Act

I. Background

A. Summary of the Hazardous and Solid Waste Amendments of 1984

The Hazardous and Solid Waste Amendments (HSWA) to the Resource Conservation and Recovery Act (RCRA), enacted on November 8, 1984, allow hazardous wastes to be land disposed only if they satisfy either of two conditions: (1) They can either be treated, or otherwise satisfy, the requirement of section 3004(m), which provision requires EPA to set levels or methods of treatment, if any, which substantially diminish the toxicity of the waste or substantially reduce the likelihood of migration of hazardous constituents from the waste so that short-term and long-term threats to human health and the environment are minimized; or (2) they can be land disposed in units satisfying the so-called no-migration standard in sections 3004 (d)(1), (e)(1), and (g)(5). Land disposal includes any placement of hazardous waste in a landfill, surface impoundment, waste pile, injection well, land treatment facility, salt dome formation, salt bed formation, or underground mine or cave. RCRA section 3004(k).

EPA was required to promulgate land disposal prohibitions and treatment standards by May 8, 1990 for all wastes that were either listed or identified as hazardous at the time of the 1984

amendments, a task EPA completed within the statutory timeframes. RCRA section 3004 (d), (e), and (g). EPA is also required to promulgate prohibitions and treatment standards for wastes identified or listed after the date of the 1984 amendments (wastes referred to in this notice as "newly listed and identified wastes") within six months after the listing or identification takes effect. RCRA section 3004(g)(4). EPA has filed with the District Court a proposed consent decree that would put the Agency on a schedule for adopting prohibitions and treatment standards for newly identified and listed wastes. The promulgation date for the newly identified and listed wastes dealt with in this rule is set for June 1992. (*EDT* v. *Reilly*, Civ. No. 89–0598, D.D.C.)

The land disposal restrictions are effective upon promulgation. RCRA section 3004(h)(1). However, the Administrator may grant a national capacity variance from the effective date and establish a later effective date (not to exceed two years) based on the earliest date on which adequate alternative treatment, recovery, or disposal capacity which protects human health and the environment will be available. RCRA section 3004(h)(2). The Administrator may also grant a case-by-case extension of the effective date for up to one year, renewable once for up to one additional year, when an applicant(s) successfully makes certain demonstrations. RCRA section 3004(h)(3). See 55 FR 22526 (June 1, 1990) for a more detailed discussion on national capacity variances and case-by-case extensions.

In addition to prohibiting land disposal of hazardous wastes, Congress prohibited storage of any waste which is prohibited from land disposal unless such storage is solely for the purpose of the accumulation of such quantities of hazardous waste as are necessary to facilitate proper recovery, treatment or disposal. RCRA section 3004(j). The provision applies, of course, only to storage which is not also defined as land disposal in section 3004(k).

B. Pollution Prevention (Waste Minimization) Benefits

EPA's progress over the years in improving environmental quality through its media-specific pollution control programs has been substantial. Over the past two decades, standard industrial practice for pollution control concentrated to a large extent on "end-of-pipe" treatment or land disposal of hazardous and nonhazardous wastes. EPA believes that reducing or eliminating discharges and/or emissions to the environment through the implementation of environmentally sound recycling and source reduction practices sometimes offer more cost effective ways of achieving environmental goals.

The Agency has identified a number of waste streams where environmentally sound recycling has been identified as BDAT. For example, we are promulgating today in section IV.C alternate treatment standards for electroplating sludges (F006) and spent pickle liquor (K062), based on high temperature metals recovery (HTMR). The Agency has determined that many of these wastes have sufficient concentrations of metals (nickel and chromium), with low concentrations of interfering chemicals, to be amenable for recovery in HTMR units. Moreover, the Agency is granting a generic exclusion for F006 and K062 HTMR nonwastewater residuals, provided that these residuals meet designated concentration levels, are disposed of in Subtitle D units, and exhibit no characteristics of hazardous waste. (This exclusion is similar to the one that was promulgated on August 8, 1991 for K061. See 56 FR 41164, August 19, 1991.) The Agency expects that these provisions will encourage more generators to choose treatment technologies for their wastes which also recover some materials for reuse. In addition, treatment standards for the newly listed petroleum refining wastes (F037 and F038) are based on some recovery technologies (critical fluid extraction and thermal desorption), as well as on incineration.

II. Summary of Final Rule

Today's final rule is the first rulemaking adopting treatment standards for newly identified and listed wastes as outlined in the consent decree described above.

Before discussing the final rule, EPA notes that certain aspects of the rule could be affected by the recently proposed rule (57 FR 21450, May 20, 1992) dealing with the question of when wastes are hazardous, concentration levels and circumstances when wastes are not hazardous, as well as circumstances when land disposal prohibitions might and might not apply. At present, however, the mixture and derived from rules remain in effect (57 FR 7628, March 3, 1992), and so apply to the rule adopted today. In addition, as explained in more detail later in the preamble, the Agency is codifying the so-called contained-in policy with respect to contaminated debris, and the preamble likewise explains how and when debris can be a hazardous waste based on application of this principle.

A. Newly Listed Wastes

EPA has promulgated a number of hazardous waste listings since enactment of HSWA in 1984. Section III of today's rule describes the treatment and/or recycling technologies that have been identified as BDAT for 20 of these listings and finalizes LDR treatment standards based on BDAT. Wastes included in today's rule include petroleum refining wastes (F037 and F038), wastes from the production of unsymmetrical dimethylhydrazine (K107–K110), wastes from the production of dinitrotoluene and toluenediamine (K111 and K112), wastes from the production of ethylene dibromide (K117, K118, and K136), wastes from the production of ethylenebisdithiocarbamic acid (K123–K126), wastes from the production of methyl bromide (K131 and K132), and several organic U wastes (U328, U353, and U359). Future proposals will include newly listed wastes not covered in today's rule. Soil contaminated with the newly listed wastes for which standards are finalized today will be addressed in a future proposal.

B. Changes to Current Regulations

The Agency is finalizing revisions to the existing treatment standards for organic constituents in F001–F005 wastes, involving conversion from TCLP standards to standards based on total concentrations. In addition, the Agency is finalizing the conversion of wastewater standards for 24 F and K waste codes based on wastewater treatment data for the constituents of concern.

EPA is also finalizing alternate treatment standards for F006 and K062, and is also extending the K061 generic exclusion published on August 19, 1991 (56 FR 41164) to certain F006 and K062 wastes. The generic exclusion levels have been slightly revised to reflect a somewhat different fate and transport model, the EPA Composite Model for Landfills (EPA CML).

EPA is also revising the notification and certification for prohibited characteristic wastes and clarifying existing rules regarding the status under part 268 of wastes listed solely because they exhibit a characteristic.

Finally, EPA is establishing a new waste management unit known as a containment building. EPA is indicating that containment buildings are not land disposal units, so that hazardous wastes may be managed in such units without first meeting treatment standards.

C. Hazardous Debris

Debris contaminated with listed prohibited wastes is already subject to the LDR treatment standards for those wastes, as is debris exhibiting a hazardous waste characteristic for which EPA has promulgated treatment standards. Today, the Agency is revising the treatment standards for such debris. The Agency is also finalizing treatment standards for debris that is contaminated with those newly listed wastes for which standards are promulgated in this rule. This rule does not identify or list any debris as hazardous, and so does not bring any additional debris into the subtitle C management system. Only hazardous debris that is currently subject to subtitle C standards is covered by today's rule. The Agency is requiring hazardous debris to be treated prior to land disposal, using specific technologies from one or more of the following families of debris treatment technologies: Extraction, destruction, or immobilization. In the alternative, hazardous debris may continue to be handled in accordance with the Agency's contained-in policy, and so may be land disposed if it no longer "contains" a hazardous waste.

To ensure effective treatment of debris (i.e., treatment sufficient to constitute BDAT), treatment must be performed in accordance with specified performance standards (see new Table 1 in today's rule). The consequence of performing this treatment would be two-fold. Not only would the debris no longer be prohibited from land disposal, but EPA would consider the treated debris to no longer be or contain a hazardous waste provided a destruction or extraction technology is used for all debris types/contaminant combinations and provided that the treated debris does not exhibit any characteristic of hazardous waste. Such treated debris could, therefore, be reused, returned to the natural environment, or disposed of in a subtitle D facility.

Residuals generated from the treatment of debris contaminated with listed wastes would still be hazardous wastes by virtue of the derived-from rule and would be subject to the hazardous waste management system. The Agency is today requiring that residuals generated from the treatment of hazardous debris be subject to the numerical treatment standards for the wastes contaminating the debris. A detailed discussion is provided in section V.G.

Finally, the Agency considered and rejected proposing numerical standards for hazardous debris because of the difficulty of sampling hazardous debris. However, based on numerous comments to the proposed rule, EPA is allowing people the option of treating debris to meet the existing treatment standards. Such debris would remain hazardous waste under the derived-from rule, unless delisted.

III. Detailed Discussion of Final Rule: Newly Listed Wastes

Since the enactment of HSWA in 1984, EPA has promulgated a number of hazardous waste listings under 40 CFR part 261 subpart D and has expanded the number of wastes covered under 40 CFR part 261 subpart C. This section of today's rule describes the treatment and/or recycling technologies that have been identified as BDAT for 20 of these "newly listed" wastes. The Agency is finalizing treatment standards under 40 CFR 268.41, .42, and .43 for these wastes based on the transfer of performance data from treating other hazardous wastes that have been determined to be similar or more difficult to treat than these wastes.

This section does not, however, finalize treatment standards for the following newly identified or listed hazardous wastes: Those recently identified under the TC rule (D018–D043); characteristic wastes generated by mineral processing activities; spent potliners from aluminum manufacturing (K088); and listed wastes from wood preserving (F032, F034, and F035). These wastes, as well as wastes from coking operations and chlorotoluene production, will be addressed in subsequent **Federal Register** notices.

Before discussing these new treatment standards, the Agency wishes to clarify one point as to its methodology in establishing treatment standards. The Agency has explained in a number of past preambles that it accounts for treatment process variability in establishing treatment standards, and does so by applying a statistically derived variability factor to the mean concentration of constituent concentrations in treatment residues from the model BDAT technologies (see 55 FR 22539 as an example). This variability factor, EPA has explained, is derived through a quantitative procedure that determines the statistical 99th percentile for the treatment standard.

Some commenters have inferred from this explanation that the treatment standards can only be achieved 99 percent of the time even by properly operated treatment units. This is an incorrect inference, although EPA acknowledges that some of its preamble language has promoted this reading. In fact, EPA expects the treatment standards to be achievable 100 percent of the time by properly operating facilities. Data points above the 99th percentile of the statistical model would in fact represent extreme departures from the mean and almost certainly reflect quality control problems in operation of the treatment technology. All of the data used in establishing treatment standards are actually much lower than 99th percentile values, as well as values in excess of that 99th percentile. (In addition, as EPA has already explained, for standards based on combustion technology, the technology routinely reduces waste concentrations to lower than detection values, yet the treatment standards nevertheless apply a variability factor to a numerical detection limit, resulting in treatment standards that are "greater than the achievable levels (which are at or below the detection limits) and should be easily met by a well-designed, well-operated incineration system."

A. Recent Petroleum Refining Wastes (F037 and F038)

F037—Any sludge generated from the gravitational separation of oil/water/solids during the storage or treatment of process wastewaters and oily cooling wastewaters from petroleum refineries. Such sludges include, but are not limited to, those generated in: Oil/water/solids separators; tanks and impoundments; ditches and other conveyances; sumps; and stormwater units receiving dry weather flow. Sludge generated in storm water units that do not receive dry weather flow, sludges generated from non-contact once-through cooling waters segregated for treatment from other process or oily cooling waters, sludges generated in aggressive biological treatment units as defined in 40 CFR § 261.31(b)(2) (including sludges generated in one or more additional units after wastewaters have been treated in aggressive biological treatment units) and K051 wastes are not included in this listing

F038—Any sludge and/or float generated from the physical and/or chemical separation of oil/water/solids in process wastewaters and oily cooling wastewaters from wastewaters from petroleum refineries. Such wastes include, but are not limited to, all sludges and floats generated in: Induced air flotation (IAF) units, tanks and impoundments, and all sludges generated in DAF units. Sludges generated in storm water units that do not receive dry weather flow, sludges generated from non-contact once-through cooling waters segregated for treatment from other process or oily cooling waters, sludges and floats generated in aggressive biological treatment units as defined in § 261.31(b)(2) (including sludges and floats generated in one or more additional units after wastewaters have been treated in aggressive biological treatment units) and

F037, K048, and K051 wastes are not included in this listing

F037 and F038 are hazardous wastes generated by facilities in the petroleum refining industry. Detailed technical descriptions of the specific processes or operations that generate these two wastes can be found in 45 FR 74884, May 19, 1980; 55 FR 46354, November 2, 1990; 56 FR 21955, May 13, 1991; and the associated listing background document.

EPA is today promulgating treatment standards for F037 and F038; these standards are the same as those proposed on January 9, 1992 (57 FR 958). (The specific regulated constituents and treatment standards for these wastes are listed in the tables at the end of this section). Since EPA is promulgating concentration levels as the treatment standards for wastewater and nonwastewater forms of F037 and F038, any treatment technology capable of reaching the treatment standards can be used except for impermissible dilution.

EPA's rationale and technical details for promulgating today's treatment standards can be found later in this section of the preamble and in the Final BDAT Background Document for F037 and F038. However, in summary, commenters to the January 9, 1992, proposal generally concurred with EPA's assertion that F037 and F038 have similar treatment characteristics to those of K051 and K048 (as well as other petroleum wastes). Most commenters also supported the transfer of available K048–K052 performance data from K048 to F038 and from K051 and K049 to F037. In fact, new data submitted to EPA in response to the May 30, 1991, Advance Notice of Proposed Rulemaking (ANPRM) and the January 9, 1992, proposal corroborates EPA's transferring of existing K048–K052 performance data to F037 and F038. These new data show that there are other technologies in addition to incineration and solvent extraction that are capable of achieving the treatment standards for the regulated constituents of concern in petroleum wastes believed as difficult to treat as F037 and F038.

The majority of commenters also supported EPA's proposal for regulating the same constituents in F037 and F038 that are regulated in K051 and K048. These commenters agreed with EPA that adoption of the proposal should reduce the administrative requirements and compliance efforts required for the petroleum wastes.

1. Regulated Constituents

EPA proposed regulating up to 18 BDAT List hazardous constituents that are known to be present in wastewater or non-wastewater forms of F037 or F038 as well as additional hazardous constituents likely to be present in F037 and F038 because they are known to be present in K048 and K051. (See discussion in January 9, 1992, proposed rule, 57 FR 962.)

One commenter who generates petroleum wastes such as API and DAF sludges, submitted data characterizing "four K sludges and five potential refinery F waste sludges from five surface impoundments." The commenter believes that these data do not support the inclusion of most of the constituents of concern associated with the LDRs.

EPA is not persuaded to change its proposed approach. The fact that the commenter's presumably untreated K or F sludges do not show certain constituents at or above detection levels should not be construed as an indication that those undetected constituents were absent. EPA's treatment studies on petroleum wastes have shown, in fact, that it is not unusual for hazardous constituents to go undetected in untreated wastes due to analytic matrix interferences and, later on, be measured in the treated wastes when the interferences are removed by treatment. In addition, several members of the regulated community responding to the ANPRM of May 30, 1991, commented that F037 and F038 wastes are likely to show variabilities in chemical and physical composition and in the treatment characteristics for the same K or F wastes from one refinery to another.

EPA is therefore promulgating treatment standards for all those constituents proposed for regulation. Regulating the same constituents present in K048 and K051 should reduce the administrative requirements and compliance efforts for all of these petroleum wastes. (See Response to Technical Comments Background Document for additional discussion.)

2. Treatment Standards for Wastewaters

EPA proposed to transfer the treatment standards for organics in wastewater forms of F037 and F038 from the F039 wastewater treatment standards (multi-source leachate). These F039 wastewater treatment standards were also proposed as a revision to K048 and K051. All commenters supported this proposal. As a result, EPA is promulgating these wastewater treatment standards for F037 and F038.

For metals in wastewater forms of F037 and F038, the treatment standards are based on chromium reduction followed by lime and sulfide precipitation and vacuum filtration. For cyanides in wastewater forms of F037 and F038, the treatment standards are based on incineration. Levels of cyanide were measured, in fact, in K048 incineration scrubber waters. EPA does not expect any constituents in F037 and F038 to interfere or behave differently from those constituents in K048–K052 or from the other wastes from which performance data were transferred.

3. Treatment Standards for Nonwastewaters

EPA is promulgating the treatment standards for F037 and F038 nonwastewaters that were proposed. In particular, the treatment standards proposed for the metals in nonwastewater forms of F037 and F038 were based on stablization of K048–K052 solvent extraction residuals; thus, these standards are set as concentrations measured in waste extracts (as measured by the TCLP). Similarly, EPA proposed for cyanide in nonwastewater forms of F037 and F038 treatment standards based on incineration of K048 and K051. Owing to the similarities in waste composition of F037 and F038 to K048–K052, stabilization is considered BDAT for the metals in F037 and F038 nonwastewaters and incineration is considered BDAT for cyanide in F037 and F038 nonwastewaters.

The proposed treatment standards for the organics in nonwastewater forms of F037 and F038 were based on the incineration and solvent extraction of K048–K052. Owing to the similarities in waste composition of F037 and F038 to K048–K052, EPA has determined that incineration and solvent extraction are also BDAT for F037 and F038. The majority of the commenters supported this determination by EPA. In doing so, EPA is applying the same approach as used to develop treatment standards for the K048–K052 wastes in the Third Third rule. In essence, allowing somewhat more lenient treatment standards than those based on performance of incineration alone, which standards nevertheless result in substantial reductions in waste toxicity and also allow for hydrocarbon recovery, furthering statutory resource recovery objectives.

EPA's modified methodology of June 1, 1990, incorporates protocols that take into account several concerns that were expressed by members of the regulated community and hazardous waste treatment industry at that time with regard to the use and the applicability of hydrocarbon recovery technologies for the whole spectrum of petroleum refining wastes. EPA also adopted the modified statistical analysis for

determining which technology performs best so as not to preclude the use of one or more hydrocarbon recovery technologies that can significantly reduce levels of toxic organics in these wastes, and also recover some of the wastes' hydrocarbon values.

After evaluating comments on the Third Third proposal, EPA determined that it was appropriate to promulgate treatment standards based on both incineration and hydrocarbon recovery technologies. EPA concluded further that although treatment standards based on solvent extraction may be somewhat higher (i.e., less stringent) than those based on incineration, solvent extraction was still providing substantial treatment to the organics of concern. In addition, EPA determined that solvent extraction provided the benefit of recovering valuable oil, and this benefit could also be provided by other available hydrocarbon recovery technologies such as thermal distillation. (See 55 FR 22596, June 1, 1990). This same reasoning applies to the F037/F038 wastes that are the subject of today's rule.

4. Response to Major Comments

The Agency is responding in this preamble to a number of the major comments received in response to the January 9, 1992, proposal. The major issues raised and addressed in this section are:

- Grab versus Composite Samples.
- Must the Treatment Standards for Nonwastewater Organics be More Stringent?

Other comments received by the Agency, including the review of new performance data, are addressed by the Agency in the Response to Technical Comments Background Document that is available in the docket associated with this rulemaking.

a. *Grab versus Composite Samples.* The American Petroleum Institute (API) and the National Petroleum Refiners Association (NPRA) are both trade associations that represent most members of the petroleum refining regulated community. API and NPRA support EPA's proposed treatment standards for the organics in wastewater forms of F037 and F038. Since the majority of the treatment performance data are based on composite samples from wastewater treatment processes, API and NPRA urged the Agency to enforce the applicable treatment standards for wastewater forms based on composite samples and not on grab samples.

EPA in fact, enforces treatment standards based on the sampling analysis protocol used (i.e., grab or composite) to support promulgation of the standard, §§ 268.41(a), 268.43(a). EPA's proposal mistakenly stated in the preamble tables that enforcement of these wastewater treatment standards would be based solely on grab samples for all the regulated constituents. EPA is correcting this error in the final rule. (See 268.41 and 268.43).

b. *Should the Treatment Standards for Nonwastewater Organics be More Stringent?* TDI Thermal Dynamics (formerly Southdown Thermal Dynamics) resubmitted comments on a thermal process that enables the recovery of valuable organics from petroleum wastes while reducing the volume of wastes needing land disposal. TDI's data are based on the treatment of K048, K049, and K051 by a thermal distillation patented process referred to by the commenter as "HT-5 Process." TDI's data show that all the proposed organic treatment standards can be achieved, indeed, potentially surpassed, through use of this technology.

Another treatment company, Retec, also submitted comments in support of the proposed treatment standards. Retec's comments include performance data from an "8,000 gallon prototype unit" and some "field data" that have treated sludges of K048, K050, K051, F037, and F038 by biological treatment. Retec refers to its biological treatment process as the "bioslurry process." These data show that most of the constituents of concern can be treated to achieve (or, in some cases, surpass) the treatment standards.

The two commenters' ultimate point is that their technologies remove more toxics than the proposed levels and should therefore be the basis for the promulgated standards.

Comments submitted by TDI and the Natural Resources Defense Council (NRDC) also state that EPA's proposed F037 and F038 treatment standards are not protective of human health and the environment and so do not satisfy the RCRA section 3004(m) criteria requiring substantial reduction in the toxicity of the waste so that threats to human health and the environment are minimized. TDI believes, in fact, that their "HT-5 Process", the CF Systems' five-path process, and fluidized incineration meet the 3004(m) criteria and that data from these three processes should support promulgation of more stringent standards. TDI and NRDC also urged EPA to promulgate treatment standards that are pursuant to EPA's protocols to establish "best" treatment and that conform to Congressional intent in section 3004(m).

EPA has reviewed comments from TDI and NRDC. Based on this review, EPA is not persuaded to promulgate more stringent standards. EPA also believes (contrary to TDI's and NRDC's positions) that today's promulgated treatment standards provide substantial treatment of F037 and F038 wastes.

First, EPA is not persuaded by NRDC's comments that, by setting treatment standards for F037 and F038 based on "less effective treatment technologies such as incineration (and solvent extraction), (EPA) may diminish the market and the availability of HT-5 for mixed wastes." Even if this were a relevant consideration, which it most likely is not, today's promulgated treatment standards are expressed as a concentration-based level for all of the (organic) constituents regulated in nonwastewater forms of F037 and F038. EPA has clearly emphasized that today's standards do not preclude the use of other treatment or recovery technologies.

The actual issue is whether the statute requires that technology-based treatment standards be optimized, i.e., be technology-forcing, in all cases (always assuming that the jurisdictional minimize threat level is not yet reached), or whether treatment that results in substantial reduction of waste toxicity is sufficient.

Technology-based treatment standards are permissible as a means of achieving the statutory objective of treatment that minimizes threats given the current uncertainty in determining what that level is (see 55 FR 6641, February 26, 1990) and *HWTC* v. *EPA*, 886 F. 2d 355, 362 (D.C. Cir. 1989). (However, technology standards are not the only means to achieve the statutory objectives. For example, the Agency recently proposed concentration levels that could serve as "minimize threat levels", which could require modification of a purely technology-based approach to establishing treatment standards (57 FR 21450, May 20, 1992.)) However, these technology-based standards need not be technology forcing. Rather, the Agency has stated that treatment standards are to be based on the use of available technologies that are capable of substantially reducing the threats that the wastes may pose when they are land disposed (55 FR 6641).

The legislative history confirms that Congress did not necessarily envision section 3004(m) treatment standards to be technology-forcing, such as these the commenters advocate. Rather, such standards were intended to require the use of generally available effective types of treatment (see 125 Cong. Rec. S9178, July 25, 1984, statement of Senator Chaffee introducing the

amendment that became section 3004 (m)):

The requisite levels [or] methods of treatment established by the Agency should be the best that has [sic] been demonstrated to be available. This does not require a BAT-type process as under the Clean Air or Clean Water Acts which contemplates technology-forcing standards. The intent here is to require utilization of available technologies in lieu of continued land disposal without prior treatment. (Congressional Record of July 25, 1984, S9178).

Thus, standards based on use of "best" treatment technologies need not be limited to optimally performing treatment (as under the Clean Water Act), but include available types of treatment that substantially reduce wastes' toxicity and short-term and long-term threats the wastes could pose when land disposed.

In light of this legislative intent, and the fact that BDAT for F037 and F038 wastes is based on the performance of two commercially available treatment technologies that provide substantial treatment to petroleum wastes that are as difficult to treat as F037 and F038, EPA believes that the BDAT Methodology adopted in this rulemaking is justified and allowed under 3004(m). Detailed discussions of EPA's data analysis and rationale can be further found in the Final BDAT Background Document for F037 and F038.

TDI also argued that EPA's approach is inconsistent with the Agency's own promulgated methodology for establishing treatment standards. To some extent, this argument reprises the point just addressed. (For example, the commenter's point that use of Analysis of Variability protocols show that performance of its technology to be superior really raises the further question of whether treatment standards must therefore be based on performance of that technology). In any case, EPA used the same revised methodology it adopted in developing the treatment standards for K048–K052 wastes in the Third Third rule.

TDI submitted comments regarding EPA's Methodology and Protocols for Developing BDAT Treatment Standards for F037/F038 wastes. TDI disputes EPA's evaluation of their performance data and, in particular, EPA's determination of the proposed treatment standards for organics in nonwastewater forms of F037 and F038. TDI submitted a report entitled Analysis of U.S. EPA's Proposed Land Disposal Restrictions for F037 and F038 Newly Listed Petroleum Refining Wastes. On the basis of this report, TDI believes EPA has violated its own "standard protocol procedures", and, after reanalyzing all the performance data, TDI urged EPA to withdraw the proposed treatment standards. TDI's comments (and TDI's technical report) seem to indicate that TDI analyzed the F037 and F038 proposal's performance data based on EPA's protocols and statistical procedures found in the Final Best Demonstrated Available Technology (BDAT) Background Document for Quality Assurance/Quality Control Procedures and Methodology of October 23, 1991. TDI reviewed the available performance data based on analyses and methodologies that EPA employs when developing treatment standards that are based on destruction or immobilization treatment technologies.

However, the QA/QC document clearly states that when EPA identifies the potential for developing treatment standards based on recovery or recycling technologies, EPA may choose to modify its methodology in developing BDAT treatment standards (EPA also used modified methodologies in the promulgation of amended organic treatment standards for K048–K052, in the Third Third final rule, and the recent final rule for K061, High Zinc Subcategory nonwastewaters. A brief description of each of EPA's modified approaches is presented in the October 23, 1991, document (see pp. 3–12—3–17, of the October 23, 1991, Quality Assurance/Quality Control Document)). This is exactly what EPA is doing here; see the Proposed BDAT Background Document for F037 and F038 for the explanation.

BDAT TREATMENT STANDARDS FOR F037

[Nonwastewaters]

Regulated constituent	Maximum for any single grab sample—Total composition (mg/kg)
Anthracene	28
Benzene	14
Benzo(a)anthracene	20
Benzo(a)pyrene	12
Bis(2-ethylhexyl)phthalate	7.3
Chrysene	15
Di-n-butyl phthalate	3.6
Ethylbenzene	14
Naphthalene	42
Phenanthrene	34
Phenol	3.6
Pyrene	36
Toluene	14
Xylenes (total)	22
Cyanides (total)	1.8

BDAT TREATMENT STANDARDS FOR F037—Continued

[Nonwastewaters]

Regulated constituent	Maximum for any single grab sample—Total composition (mg/kg)
Regulated constituent	**Maximum for any single grab sample—TCLP (mg/l)**
Chromium (total)	1.7
Nickel	0.20

BDAT TREATMENT STANDARDS FOR F037

[Wastewaters]

Regulated constituent	Maximum for any 24 composite sample—Total composition (mg/l)
Acenaphthene	0.059
Anthracene	0.059
Benzene	0.14
Benzo(a)anthracene	0.059
Benzo(a)pyrene	0.061
Bis(2-ethylhexyl)phthalate	0.28
Chrysene	0.059
Di-n-butyl phthalate	0.057
Ethylbenzene	0.057
Fluorene	0.059
Naphthalene	0.059
Phenanthrene	0.059
Phenol	0.039
Pyrene	0.067
Toluene	0.080
Xylenes (total)	0.32
Regulated constituent	**Maximum for any single grab sample—Total composition (mg/l)**
Cyanides (total)	0.028
Chromium (total)	0.20
Lead	0.037

BDAT TREATMENT STANDARDS FOR F038

[Nonwastewaters]

Regulated constituent	Maximum for any single grab sample—Total composition (mg/kg)
Benzene	14
Benzo(a)pyrene	12
Bis(2-ethylhexyl)phthalate	7.3
Chrysene	15
Di-n-butyl phthalate	3.6
Ethylbenzene	14
Naphthalene	42
Phenanthrene	34

BDAT TREATMENT STANDARDS FOR F038—Continued

[Nonwastewaters]

Regulated constituent	Maximum for any single grab sample—Total composition (mg/kg)
Phenol	3.6
Pyrene	36
Toluene	14
Xylenes (total)	22
Cyanide (total)	1.8
Regulated constituent	**Maximum for any single grab sample—TCLP (mg/l)**
Chromium (total)	1.7
Nickel	0.20

BDAT TREATMENT STANDARDS FOR F038

[Wastewaters]

Regulated constituent	Maximum for any 24 composite sample—Total composition (mg/l)
Benzene	0.14
Benzo(a)pyrene	0.061
Bis(2-ethylhexyl)phthalate	0.28
Chrysene	0.059
Di-n-butyl phthalate	0.057
Ethylbenzene	0.057
Fluorene	0.059
Naphthalene	0.059
Phenanthrene	0.059
Phenol	0.039
Pyrene	0.067
Toluene	0.080
Xylenes (total)	0.32
Regulated constituent	**Maximum for any single grab sample—Total composition (mg/l)**
Cyanides (total)	0.028
Chromium (total)	0.20
Lead	0.037

B. Wastes from the Production of Unsymmetrical

Dimethylhydrazine (K107, K108, K109, and K110)

K107—Column bottoms from product separation from the production of 1,1-dimethylhydrazine from carboxylic acid hydrazides

K108—Condensed column overheads from product separation and condensed reactor vent gases from the production of 1,1-dimethylhydrazides from carboxylic acid hydrazine

K109—Spent filter cartridges from product purification from the production of 1,1-dimethylhydrazides from carboxylic acid intermediates

K110—Condensed column overheads from intermediate separation from the production of 1,1-dimethylhydrazine from carboxylic acid hydrazide intermediates

EPA proposed on January 9, 1992 (57 FR 965) to establish treatment standards for these wastes expressed as required methods of treatment. As was discussed in the preamble to the proposed rule, these wastes are being regulated despite the fact that EPA is not aware of facilities generating them. For nonwastewater forms of these wastes, the required method of treatment was incineration. For wastewater forms, the required methods of treatment were incineration or, alternatively, chemical oxidation followed by carbon adsorption. The basis for expressing the proposed treatment standards as required methods of treatment was that these wastes are relatively unstable in water resulting in difficulties in accurate quantification in treatment residues. (See 57 FR 965.)

The wastewater standards promulgated today for these wastes differ from the proposed standards in that EPA is adding biodegradation followed by carbon adsorption, (BIODEG fb CARBN) to the methods designated as method-of-treatment standards for K107–K110 wastewaters in tables 1 and 2 of 40 CFR 268.42. The Agency is adding this standard to be consistent with other sections of this rulemaking, where in response to comments supporting the use of biodegradation as an alternative method of treatment, the Agency is promulgating biological treatment as equivalent to chemical oxidation. The Agency is including biodegradation plus carbon adsorption for these hydrazine wastes based on hydrolysis data indicating that hydrazines break down rapidly in water.

The definition of BIODEG as a technology-based standard for listed wastewaters calls for operating the unit such that "a surrogate compound or indicator parameter has been substantially reduced in concentration in the residuals." EPA believes that this provision allows permitting and compliance authorities enough control over the BIODEG unit so that biodegradation can be designated BDAT for these wastes, which are known to hydrolyze rapidly to compounds amenable to biological degradation.

EPA received no comments on its proposed treatment standards for the nonwastewater forms of these wastes. Therefore, the Agency is promulgating the treatment standards for K107–K110 nonwastewaters as proposed: incineration (INCIN) as a method of treatment.

C. 2-Ethoxyethanol Wastes (U359)

EPA is promulgating methods of treatment for 2-ethoxyethanol wastes (U359), whose generation and characteristics are described in the proposed rule preamble (57 FR 968). The promulgated standards differ somewhat from the proposed standards; first, EPA is adding biodegradation followed by carbon adsorption, (BIODEG fb CARBN) to the methods designated as method-of-treatment standards for U359 wastewaters in Tables 1 and 2 of 40 CFR 268.42. The proposed wastewater treatment standard was incineration or chemical oxidation followed by biological treatment or carbon adsorption. Second, EPA is promulgating also fuel substitution (FSUBS) as an alternative standard to incineration (INCIN) for U359 nonwastewaters. (See 57 FR 969.)

EPA had proposed methods-of-treatment as standards, rather than concentration-based numerical standards, because this waste is relatively unstable in water, resulting in difficulties in accurate quantification in treatment residuals. Several commenters, however, requested that the Agency set concentration-based standards for 2-ethoxyethanol wastes and suggested several innovative analytical methods to quantify 2-ethoxyethanol. EPA acknowledges that 2-ethoxyethanol can be quantified by direct injection methods (i.e. those not requiring a purge step in the analytical procedure). EPA is, nevertheless, promulgating methods of treatment as standards because EPA has only limited treatability data for 2-ethoxyethanol to serve as a basis for calculating numerical treatment standards. EPA's decision to change the wastewater standards to include biodegradation followed by activated carbon adsorption is consistent with the revision in this rule of the K107–K110 wastewater standards allowing BIODEG as a method-of-treatment based on the waste components' extreme instability in water.

The definition of BIODEG as a technology-based standard for listed wastewaters calls for operating the unit such that "a surrogate compound or indicator parameter has been substantially reduced in concentration in the residuals." EPA believes that this provision allows permitting and compliance authorities adequate control over the BIODEG unit so that biodegradation can be designated BDAT

for these wastes since 2-ethoxyethanol is known to hydrolyze rapidly to ethanol, which is known to be amenable to biological treatment.

EPA is promulgating incineration (INCIN) as a method-of-treatment standard for U359 nonwastewaters as proposed, but is also including fuel substitution (FSUBS) as an alternative. EPA is adding FSUBS because 2-ethoxyethanol is a readily oxidizable carbon, hydrogen, and oxygen compound that will not release undesirable combustion products such as halogen acids, nitrogen, or sulfur dioxides.

D. Wastes From the Production of Dinitrotoluene and Toluenediamine (K111 and K112, U328 and U353)

K111—Product wash waters from the production of dinitrotoluene via nitration of toluene

K112—Reaction byproducts from the drying column in the production of toluenediamine via hydrogenation of dinitrotoluene

U328—Ortho-toluidine

U353—Para-toluidine

EPA proposed on January 9, 1992, to establish treatment standards for these wastes expressed as required methods of treatment. The proposed rule discussed the generation and characteristics of these wastes in greater detail (57 FR 965). For nonwastewater forms of these wastes, the required method of treatment was incineration. For wastewater forms, the required methods of treatment were incineration or, alternatively, chemical oxidation followed by carbon adsorption. The basis for expressing the proposed treatment standards as required methods of treatment was that many constituents of these wastes are relatively unstable in water resulting in difficulties in accurate quantification in treatment residues. (See 57 FR 965)

The Agency is finalizing the proposed standards with two substantive changes for K111, K112, U328, and U353: First, EPA is replacing the proposed methods-of-treatment standards for K111 wastewaters and nonwastewaters with concentration-based standards numerically equal to the F039 standards for 2,4-dinitrotoluene and 2,6-dinitrotoluene. Second, EPA is adding biodegradation followed by carbon adsorption (BIODEG fb CARBN) to the methods of treatment specified as treatment standards for K112, U328, and U353 wastewaters in Tables 1 and 2 of 40 CFR 268.42.

In particular, data from one commenter indicated that the concentrations of 2,4-dinitrotoluene and 2,6-dinitrotoluene in K111 wastewaters and nonwastewaters are sufficiently high such that treating the K111 wastes to the F039 treatment standards for these constituents should be an acceptable surrogate to ensure that the other constituents are treated to acceptably low levels.

The other constituents include nitrocresols, nitrophenols, and nitrobenzoic acid; since reliable analytical methods are not available to quantify these constituents in waste matrices, the Agency will not set concentration-based treatment standards for them. By setting concentration-based standards for the quantifiable components of K111 wastewaters and nonwastewaters, EPA is allowing the use of any treatment system (other than impermissible dilution) that meet these numbers for the dinitrotoluenes.

Data from this same commenter also indicated that biological treatment can achieve significant reductions in the concentration of toluenediamines in K112 wastewater streams. Based on the commenter's data demonstrating substantial reductions in K112 wastewater toluenediamine concentrations in the course of biological treatment, EPA is adding biodegradation (BIODEG) to the set of methods-of-treatment designated as treatment standards for K112 wastewaters.

EPA believes, in addition, that o-toluidine and p-toluidine, the listing components of U328 and U359, are sufficiently chemically similar to toluenediamines that the treatment standards for K112 should also apply to U328 and U359 wastes. EPA is, therefore, including BIODEG among the methods-of-treatment standards promulgated for U328 and U359 wastewaters.

The definition of BIODEG as a technology-based standard for listed wastewaters calls for operating the unit such that "a surrogate compound or indicator parameter has been substantially reduced in concentration in the residuals." EPA believes that this provision allows permitting and compliance authorities adequate control over the BIODEG unit so that biodegradation can be designated BDAT for these wastes, which have been documented to amenable to biological treatment.

EPA is promulgating treatment standards for K112, U328 and U359 nonwastewaters as proposed: incineration (INCIN) as a method of treatment.

BDAT TREATMENT STANDARDS FOR K111

[Nonwastewaters]

Regulated constituent	Maximum for any single grab sample—Total composition (mg/kg)
2,4-Dinitrotoluene	140
2,6-Dinitrotoluene	28

BDAT TREATMENT STANDARDS FOR K111

[Wastewaters]

Regulated constituent	Maximum for any single grab sample—Total composition (mg/l)
2,4-Dinitrotoluene	0.32
2,6-Dinitrotoluene	0.55

E. Wastes From the Production of Ethylene Dibromide (K117, K118 and K136) and Wastes From the Production of Methyl Bromide (K131 and K132)

K117—Wastewater production from the reactor vent gas scrubber in the production of ethylene dibromide via bromination of ethylene.

K118—Spent adsorbent solids from purification of ethylene dibromide via bromination of ethylene dibromide via bromination of ethylene.

K136—Still bottoms from the purification of ethylene dibromide in the production of ethylene dibromide via bromination of ethylene.

K131—Wastewater from the reactor and spent sulfuric acid from the acid dryer from the production of methyl bromide.

K132—Spent adsorbent and wastewater separator solids from the production of methyl bromide.

With one exception, today's rule promulgates the treatment standards for ethylene dibromide wastes (K117, Kl18 and K136) and methyl bromide wastes (K131 and K132) that the Agency proposed in the January 9, 1992 proposed rule, where it discussed the generation and characteristics of these wastes (57 FR 966–967). These are concentration-based standards numerically equal to the FO39 standards for the constituents of these wastes; the BDAT Background Document for U and P Wastes and Multi-Source Leachate (F039) (volumes A and C) describes how each standard was calculated. The nonwastewater standards (volume C) are based on the results of a series of incineration tests performed by the Agency in the course of developing treatment standards for earlier land disposal restrictions rulemakings. The wastewater standards (volume A) are based on data collected by EPA's Office

of Water and Office of Research and Development and reflect a variety of industrial wastewater technologies. Technologies used to develop the wastewater numbers promulgated here include steam stripping, activated sludge, and air stripping.

The one change that EPA is making is as follows: EPA proposed treatment standards for "1,1,2-tribromomethane" in the January 9, 1992, notice (57 FR 996 and 997). (This was a misprint for 1,1,2-tribromoethane, a constituent present in the ethylene dibromide process waste stream K118). At the time of the proposed rule, EPA was considering adding 1,1,2-tribromoethane to its BDAT List of constituents known to be amenable to quantification in waste matrices with existing SW-846 methods. EPA has since decided not to add 1,1,2-tribromoethane to the BDAT List and is consequently not promulgating treatment standards for this compound.

As a result of soliciting data on the proposed standards in the May 30, 1991, Advance Notice of Proposed Rulemaking and then in the January 9, 1992, Proposed Rule, EPA received comments from the two facilities believed to generate all of these waste streams. Both supported the use of steam stripping for treating brominated wastewaters. One of the two commenters submitted data characterizing the results of steam stripping groundwater that had become contaminated with ethylene dibromide and several other brominated and chlorinated compounds. Because these data did not clearly identify corresponding influent and effluent streams, they could not be used to evaluate the performance of the system in terms of contaminant removal.

This commenter also endorsed the incineration-based numerical treatment standards for nonwastewater forms of these wastes. A second commenter objected, however, to the incineration-based nonwastewater standards. In particular, the commenter claimed that bromine forms corrosive hydrogen bromide in incinerator combustion chambers. This commenter, the sole generator of K118, reported difficulties in incinerating a batch of K118 nonwastewater at a commercial facility and requested that EPA base all treatment standards for organobromine wastes on steam stripping.

The Agency acknowledges that there may be difficulties in incinerating brominated wastes (even though one commenter explicitly endorses incineration-based standards for K117, K118, K131, and K132 nonwastewaters). In the absence of performance data on an alternative process for nonwastewaters, EPA is promulgating the incineration-based nonwastewater standards that were originally proposed. Steam stripping, and any other forms of waste treatment other than impermissible dilution, may also be used to achieve the numerical treatment standards regardless of which technology served as the basis of the standards. Furthermore, the regulated community has options, including applying for treatability or capacity variances, for overcoming technical difficulties in treating especially problematic batches of wastes.

BDAT TREATMENT STANDARDS FOR K117, K118, AND K136

[Nonwastewaters]

Regulated constituent	Maximum for any single grab sample—Total composition (mg/kg)
Ethylene dibromide	15.0
Bromomethane	15.0
Chloroform	5.6

BDAT TREATMENT STANDARDS FOR K117, K118, AND K136

[Wastewaters]

Regulated constituent	Maximum for any single grab sample—Total composition (mg/l)
Ethylene dibromide	0.028
Bromomethane	0.11
Chloroform	0.046

BDAT TREATMENT STANDARDS FOR K131 AND K132

[Nonwastewaters]

Regulated constituent	Maximum for any single grab sample—Total composition (mg/kg)
Bromomethane (methyl bromide)	15

BDAT TREATMENT STANDARDS FOR K131 AND K132

[Wastewaters]

Regulated constituent	Maximum for any single grab sample—Total composition (mg/l)
Bromomethane (methyl bromide)	0.11

F. Wastes From the Production of Ethylenebisdithiocarbamic Acid (K123, K124, K125, and K126)

K123—Process wastewater (including supernatants, filtrates and wash waters) from the production of ethylenebisdithiocarbamic acid and its salts.

K124—Reactor vent scrubber water from the production of ethylenebisdithiocarbamic acid and its salts.

K125—Purification solids (including filtration, evaporation and centrifugation solids) from the production of ethylenebisdithiocarbamic acid and its salts.

K126—Baghouse dust and floor sweepings in milling and packaging operations from the production of ethylenebisdithiocarbamic acid and its salts.

EPA is promulgating the treatment standards as proposed for ethylenebisdithiocarbamic acid wastes (EDBC) (K123–K126). The preamble in the proposed rule describes the generation and characteristics of these wastes in greater detail (57 FR 967). The Agency proposed incineration (INCIN) as a method of treatment as the treatment standard for K123–K126 nonwastewaters and incineration or chemical oxidation followed by biological treatment or carbon adsorption (INCIN or CHOXD) for K123–K126 wastewaters. EPA received no comments challenging these treatment standards.

Although EPA is expanding the set of methods of treatment as standards to include BIODEG by itself for the methyl hydrazine wastes K107–K110, the toluenediamine waste K112, the toluidine wastes U326 and U353, and 2-ethoxyethanol U359, EPA is not adding BIODEG alone to the set of methods of treatment for the EDBC wastewaters. For each of the cases where EPA is today adding BIODEG to the list of promulgated methods of treatment as standards, EPA has either treatability data documenting successful treatment of these wastes or their close analogues in a biological unit or data demonstrating that these wastes readily hydrolyze to simple, relatively nontoxic compounds known to be readily amenable to biological degradation. In the absence of any such data about EDBC waste amenability to hydrolysis or biodegradation, EPA chooses not to include BIODEG as a primary method of treatment for EDBC wastewaters.

IV. Detailed Discussion of Final Rule: Changes to Existing Regulations

A. Revisions to the F001–F005 Spent Solvents Treatment Standards

F001—The following spent halogenated solvents used in degreasing: Tetrachloroethylene, trichloroethylene, methylene chloride, 1,1,1-trichloroethane, carbon tetrachloride, and chlorinated fluorocarbons; all spent solvent mixtures/blends used in degreasing containing, before use, a total of 10 percent or more (by volume) of one or more of the above halogenated solvents or those solvents listed in F002, F004, and F005 and still bottoms from the recovery of these spent solvents and spent solvent mixtures.

F002—The following spent halogenated solvents: Tetrachloroethylene, methylene chloride, trichloroethylene, 1,1,1-trichloroethane, chlorobenzene, 1,1,2-trichloro-1,2,2-trifluoroethane, ortho-dichlorobenzene, trichlorofluoromethane, and 1,1,2-trichloroethane; all spent solvent mixtures/blends containing, before use, a total of 10 percent or more of the above halogenated solvents or those listed in F001, F004, or F005; and still bottoms from the recovery of these spent solvents and spent solvent mixtures.

F003—The following spent nonhalogenated solvents: Xylene, acetone, ethyl acetate, ethyl benzene, ethyl ether, methyl isobutyl ketone, n-butyl alcohol, cyclohexanone, and methanol; all spent solvent mixtures/blends containing, before use, only the above spent nonhalogenated solvents; and all spent solvent mixtures/blends containing, before use, one or more of the above nonhalogenated solvents, and a total of 10 percent or more (by volume) of one or more of those solvents listed in F001, F002, F004, and F005; and still bottoms from the recovery of these spent solvents and spent solvent mixtures.

F004—The following spent nonhalogenated solvents: Cresol and cresylic acid and nitrobenzene; all spent solvent mixtures/blends containing, before use, a total of 10 percent or more (by volume) of one or more of the above nonhalogenated solvents or those solvents listed in F001, F002, and F005; and still bottoms from the recovery of these spent solvents and spent solvent mixtures.

F005—The following spent nonhalogenated solvents: Toluene, methyl ethyl ketone, carbon disulfide, isobutanol, pyridine, benzene, 2-ethoxyethanol, and 2-nitropropane; all spent solvent mixtures/blends containing, before use, a total of 10 percent or more (by volume) of one or more of the above nonhalogenated solvents or those solvents listed in F001, F002, or F004; and still bottoms from the recovery of these spent solvents and spent solvent mixtures.

The Agency is promulgating revised treatment standards for solvent wastewaters of F001–F005 wastes as proposed in the January 9, 1992 notice (57 FR 969–971).

1. Regulatory Background

a. *Listing Definitions.* On May 19, 1980 (45 FR 33119), the Environmental Protection Agency (EPA) listed 26 commonly used organic solvents as hazardous wastes when spent or discarded. The solvents were listed as EPA Hazardous Waste Nos. F001, F002, F003, F004, and F005. These listed wastes included certain spent halogenated and nonhalogenated solvents, including still bottoms from the recovery of these solvents.

On December 31, 1985 (50 FR 53315), the Agency promulgated an amendment to the listings to include mixtures containing a total of 10 percent or more (by volume) of one or more of the listed solvents (the 10 percent threshold always applied to solvent mixtures before use). The Agency believed that establishing a threshold level below the minimum solvent concentration typically used in solvent formulations would bring the majority of solvent mixtures used in commerce into the hazardous waste management system, while excluding dilute mixtures. The Agency also clarified in the December 31, 1985, **Federal Register** (50 FR 53315), that the listings cover only those solvents that are used for their "solvent" properties, i.e., to solubilize (dissolve) or mobilize other constituents. Manufacturing process wastes where solvents were used as reactants or ingredients in the formulation of commercial chemical products are not covered by the listing.

The definition of the spent solvents listing did not include four solvents that were added to the F001–F005 listing on February 25, 1986 (51 FR 40607): Benzene, 2-ethoxyethanol, 2-nitropropane, and 1,1,2-trichloroethane.

b. *F001–F005 Treatment Standards.* The Agency promulgated treatment standards for the F001–F005 spent solvent wastes on November 7, 1986 (51 FR 40593). The Agency also promulgated a requirement that compliance with the treatment standard be measured in the waste extract as measured by the Toxicity Characteristic Leaching Procedure (TCLP).

This approach was taken because useful data were not available on total constituent concentrations in treated residuals, and as a result, the TCLP data were considered to be the best measure of performance.

Since that time EPA has based treatment standards for all organic constituents on the total constituent concentration analysis found in the treated waste. EPA has based this decision on the fact that the best demonstrated available treatment (BDAT) for organic wastes generally destroy the hazardous organic constituents. Accordingly, treatment should reflect the extent to which the various organic compounds have been destroyed or the total amount of constituent remaining after treatment.

c. *Methylene Chloride Standard Revised.* As part of the First Third Rule, the Agency revised and promulgated the treatment standard for methylene chloride in F001–F005 wastewaters from the pharmaceutical industry (53 FR 31152). The revised treatment standard was based on the transfer of wastewater treatment data from steam stripping of methylene chloride. Compliance with this treatment standard is measured by a total constituent analysis.

d. *Setting Treatment Standards for Four (4) "Newly Listed" Constituents (51 FR 6737, February 25, 1986).* In the Third Third rule (55 FR 22576), the Agency promulgated treatment standards for 1,1,2-trichloroethane, benzene, 2-ethoxyethanol, and 2-nitropropane in F002 and F005 spent solvents. (EPA did not amend the previously promulgated treatment standards for the other solvent constituents in F002 and F005). The concentration-based treatment standards for 1,1,2-trichloroethane and benzene in wastewater forms were based on performance data generated from: biological treatment, steam stripping, carbon adsorption, liquid extraction, and others. The concentration-based treatment standards promulgated for 1,1,2-trichloroethane and benzene in nonwastewater forms were based on performance data from incineration. These treatment standards are measured by total constituent analysis. EPA had also determined that the available data were insufficient to establish concentration-based treatment standards for wastewater and nonwastewater forms of F005 containing 2-nitropropane and 2-ethoxyethanol and instead promulgated methods of treatment as the treatment standards. Again, EPA is not revising this previously promulgated treatment standard.

2. Overlap Between F001–F005 Solvents and Other BDAT Standards.

Many of the solvent constituents that are regulated in F001–F005 wastes are also regulated in the First, Second, and Third Third rules, as discussed in the preamble to the January 9, 1992 proposed rule (57 FR 970).

In the November 22, 1989 proposed rule for the Third Third wastes, EPA proposed two alternative sets of

concentration-based treatment standards for wastewater forms for the majority of the U and P listed wastes, many of which are solvent constituents found in F001–F005 wastes. One set of treatment standards was based on the concentration of each constituent in incinerator scrubber water; whereas, the second set of treatment standards was based on wastewater treatment performance data for each constituent. On the basis of comments received, the Agency promulgated treatment standards based on wastewater treatment performance data. These treatment standards were promulgated on June 1, 1990 (55 FR 22601).

The Agency also proposed treatment standards for nonwastewater forms of U and P listed wastes on November 22, 1989 (54 FR 48372). In the final Third Third rule, the Agency promulgated treatment standards for approximately 75 constituents, establishing either concentration-based standards, or incineration as a method of treatment as BDAT.

Treatment standards for several F and K listed wastes containing the same solvent constituents as are present in F001–F005 solvent wastes were also promulgated in the Third Third rule as discussed in the January 9, 1992 proposed rule (57 FR 970).

3. Comments Received on the January 9, 1992 Proposed Rule

The Agency received a number of generally favorable comments on the proposed approach—that is, most commenters supported revising the nonwastewater treatment standards from the existing TCLP standards to standards based on total concentrations. Hazardous Waste Treatment Council (HWTC) expressed concerns, however, with regard to meeting concentration based standards for five constituents: chlorobenzene, n-butyl alcohol, o-cresol, ethyl acetate, and nitrobenzeneone. EPA acknowledges HWTC's concerns with regard to potential analytical difficulties in the analysis of these five constituents. EPA has, in fact, addressed this issue in the June 1, 1990 final rule (55 FR 22541). If the treater uses incineration to treat these wastes and achieves a non-detect level within an order of magnitude of the promulgated treatment standards, then they are considered to have achieved the standard (see 55 FR 22541, June 1, 1990).

Most of HWTC's problem constituents would be able to comply with the treatment standard after the order of magnitude allowance is taken into account. One constituent, o-cresol, according to the data submitted by HWTC, appears to exceed the proposed treatment standard. After reviewing available incineration and combustion data for this constituent, EPA believes the proposed treatment standards (and the one order of magnitude allowance) are reasonable and achievable. In fact, the Agency has promulgated treatment standards for o-cresol in K019, F039 and U052 at a level of 5.6 ppm with detection limits of less than 2.0 ppm. Also, o-cresol is a regulated constituent in K052, whose treatment standard of 6.2 ppm is based on a detection limit of 2.2 ppm which was based on treatment data submitted from industry (55 FR 22594). EPA is therefore, promulgating today, treatment standards for each one of the five constituents as proposed on January 9, 1992 (57 FR 971).

4. Final Approach

The Agency is promulgating revised treatment standards for both nonwastewater and wastewater forms of F001–F005 wastes as proposed. (See the Table at end of this section for specific treatment levels.) The methodology used to develop the treatment standards for both nonwastewater and wastewater forms of F039 (multisource leachate) was used to determine the revised treatment standards for the F001–F005 spent solvents. These revisions do not, however, include the four solvents that were added to the solvents listings: benzene, 2-ethoxyethanol, 2-nitropropane, and 1,1,2-trichloroethane. Treatment standards for these constituents were promulgated in the Third Third final rule in accordance with the previously mentioned methodology.

Today's rule does not include revised treatment standards for nonwastewater forms of carbon disulfide, cyclohexanone, or methanol based on total constituent analysis. These three constituents are not well suited for total constituent analysis, and, in fact, are more appropriately analyzed by the TCLP methodology. The Agency did not propose to revise the existing TCLP treatment standards, for these three constituents, in the January 9, 1992 rulemaking. The Agency is retaining the existing TCLP standards for these three constituents in F001–F005 nonwastewaters in today's rulemaking. (TCLP treatment standards for these three constituents appear in a table at the end of this section).

Because the Agency does not want to require unnecessary and burdensome testing, the TCLP test will only have to be performed if the waste includes only one, two or all three of these constituents. If the waste contains any of these three constituents along with any of the other 26 constituents found in F001–F005 for which the Agency is promulgating treatment standards based on total constituents analysis, only the total analysis need be performed. It is assumed that after treatment is performed, for these organic constituents, and the total constituent standards are achieved, that these three constituents will also have been treated.

a. *Revisions to the Standards for Cresols.* In the Solvents and Dioxins rule, the Agency promulgated BDAT treatment standards for "cresols." At that time, the Agency did not distinguish between the various isomers that are present in cresols. As a result, the Agency promulgated a concentration-based treatment standard for cresol wastewaters of 2.82 mg/l based on the performance of activated carbon adsorption. For nonwastewaters, the Agency had no data on TCLP extracts of residues from the incineration of cresols (cresylic acid) to use in the development of the treatment standard. EPA, instead, used chemical structure as the basis for transferring the treatment data from methyl ethyl ketone to cresols (cresylic acid) in spent solvents. The treatment standard of 0.75 mg/l for nonwastewaters is based on the transferred data.

In the Third Third rule, EPA promulgated treatment standards for U052. U052 is listed as "cresols (Cresylic acid). U052 typically contains various levels of ortho-cresol, meta-cresol, and para-cresol. Analytical methods are usually reported for o-cresol (CAS No. 95–48–7) and a combination of m- and p-cresols, because m-cresol and p-cresol cannot generally be distinguished by analytical methods. Thus, the Agency promulgated concentration-based standards for U052 based on an analysis for o-cresol and the mixture of m-cresol and p-cresol.

Based on this, the Agency is today modifying the current treatment standards for the constituent "cresols" in F001–F005 wastes as proposed. (57 FR 970, January 9, 1992).

b. *Modification to the Regulatory Placement of F001–F005 Standards.* In today's rule, EPA is promulgating revised treatment standards for solvent wastewaters (F001–F005) in Table CCW (40 CFR 268.43) as proposed. (The following treatment standards for wastewaters are based on F039 wastewater data, and for nonwastewater is based on incineration data).

PROMULGATED BDAT TREATMENT STANDARDS FOR F001–F005 SPENT SOLVENT WASTES

[Wastewater; Total Concentration]

Regulated constituent	Wastewater (mg/l)
Acetone	0.28
n-Butyl alcohol	5.6
Carbon disulfide	0.014
Carbon tetrachloride	0.057
Chlorobenzene	0.057
Cresol(m- and p- isomers)	0.77
o-Cresol	0.11
Cyclohexanone	0.36
1,2-Dichlorobenzene	0.088
Ethyl acetate	0.34
Ethyl benzene	0.057
Ethyl ether	0.12
Isobutyl alcohol	5.6
Methanol	5.6
Methylene chloride	[1] 0.089
Methyl ethyl ketone	0.28
Methyl isobutyl ketone	0.14
Nitrobenzene	0.068
Pyridine	0.014
Tetrachloroethylene	0.056
Toluene	0.08
1,1,1-Trichloroethane	0.054
Trichloroethylene	0.054
1,1,2-Trichloro-1,2,2,-trifluoroethane	0.057
Trichloromonofluoromethane	0.02
Xylenes (total)	0.32

[1] The methylene chloride treatment standard for wastewaters generated from pharmaceutical plants is 0.44 mg/l.

NA: Not applicable.

PROMULGATED BDAT TREATMENT STANDARDS FOR F001–F005 SPENT SOLVENT WASTES

[Nonwastewater; Total Concentration]

Regulated constituent	Nonwastewater (mg/kg)
Acetone	160
n-Butyl alcohol	2.6
Carbon disulfide	[1] NA
Carbon tetrachloride	5.6
Chlorobenzene	5.7
Cresol(m- and p- isomers)	3.2
o-Cresol	5.6
Cyclohexanone	[1] NA
1,2-Dichlorobenzene	6.2
Ethyl acetate	33
Ethyl benzene	6.0
Ethyl ether	160
Isobutyl alcohol	170
Methanol	[1] NA
Methylene chloride	33
Methyl ethyl ketone	36
Methyl isobutyl ketone	33
Nitrobenzene	14
Pyridine	16
Tetrachloroethylene	5.6
Toluene	28
1,1,1-Trichloroethane	5.6
Trichloroethylene	5.6
1,1,2-Trichloro-1,2,2,-trifluoroethane	28
Trichloromonofluoromethane	33
Xylenes (total)	28

[1] These treatment standards are based on TCLP, not total constituent concentration (see following table with TCLP treatment standards).

NA: Not applicable.

PROMULGATED BDAT TREATMENT STANDARDS FOR F001–F005 SPENT SOLVENT WASTES

[Nonwastewater; Toxicity Characteristic Leaching Procedure]

Regulated constituent	Nonwastewater (mg/l)
Carbon disulfide	4.8
Cyclohexanone	0.75
Methanol	0.75

B. Conversion of Wastewater Standards Based on Scrubber Water

K015—Still bottoms from the distillation of benzyl chloride
K016—Heavy ends or distillation residues from the production of carbon tetrachloride
K018—Heavy ends from the fractionation column in ethyl chloride production
K019—Heavy ends from the distillation of ethylene dichloride in ethylene dichloride production
K020—Heavy ends from the distillation of vinyl chloride in vinyl chloride production
K023—Distillation light ends from the production of phthalic anhydride from naphthalene
K024—Distillation bottom tars from the production of phthalic anhydride from naphthalene
K028—Spent catalyst from the hydrochlorinator reactor in the production of 1,1,1-trichloroethane
K030—Column bottoms or heavy ends from the combined production of trichloroethylene and perchloroethylene
K048—Dissolved air flotation (DAF) float from the petroleum refining industry
K049—Slop oil emulsion solids from the petroleum refining industry
K050—Heat exchanger bundle cleaning sludge from the petroleum refining industry
K051—API separator sludge from the petroleum refining industry
K052—Tank bottoms (leaded) from the petroleum refining industry
K087—Decanter tank tar sludge from coking operations
K093—Distillation light ends from the production of phthalic anhydride from ortho-xylene
K094—Distillation bottoms from the production of phthalic anhydride from ortho-xylene
U028—Bis(2-ethylhexyl)phthalate
U069—Di-n-butyl phthalate
U088—Diethyl phthalate
U102—Dimethyl phthalate
U107—Di-n-octyl phthalate
U190—Phthalic anhydride (measured as Phthalic acid)

On November 22, 1989 (54 FR 48372), EPA proposed as part of the Third Third rule concentration-based treatment standards for numerous listed wastes based on the performance of incineration. For the wastewaters, the treatment standards were based on the concentration of the constituents of concern in incineration scrubber waters. In the final rule (55 FR 22520), however, EPA altered its approach to setting these standards and promulgated treatment standards for wastewaters based on actual wastewater treatment data for the constituents of concern. This change was adopted for a number of reasons.

First, it was stated in the final rule for the Second Third wastes (54 FR 26629) and reiterated in the final rule for Third Third wastes (55 FR 22577) that when the Agency had appropriate wastewater treatment data from well-designed and well-operated wastewater treatment units it preferred to use those data rather than scrubber water data to develop wastewater treatment standards. This is because incineration is not a normal treatment method for wastewaters. In addition, alternative standards were proposed in the Third Third notice for multisource leachate (F039) wastewaters based on a transfer of performance data from various sources. Second, commenters on the proposed Third Third rule had urged the Agency to develop treatment standards for wastewater forms based on residues from wastewater treatment technologies rather than incineration scrubber waters. Commenters on previous rules had also stated that when EPA had performance data from technologies treating wastewaters containing the same or similar constituents that EPA should use it to develop treatment standards.

The Agency reviewed all of the aforementioned data during the Third Third comment period and promulgated constituent-specific concentration-based standards. Detailed information on the development of the wastewater treatment standards can be found in the background document titled Final Best Demonstrated Available Technology (BDAT) Background Document for U and P Wastes and Multi-Source Leachates (F039), Volume A: Wastewater Forms of Organic U and P Wastes and Multi-Source Leachates (F039) for Which There Are Concentration-Based Treatment Standards. (This document can be found in the RCRA docket for the Third Third final rule).

As part of the First Third and Second Third rules, EPA promulgated treatment standards for wastewater forms of 23 K and U wastes (i.e., K015, K016, K018, K019, K020, K023, K024, K028, K030, K048, K049, K050, K051, K052, K087, K093, K094, U028, U069, U088, U102, U107, and U190). These wastewater treatment standards were based on data from incineration scrubber waters. Upon review of all available data and comments, the Agency believes that

BDAT for these wastewaters is better represented by concentration-based treatment standards based on actual wastewater treatment technologies rather than scrubber waters generated from incineration. Therefore, the Agency is today promulgating concentration-based treatment standards for these wastewaters as proposed. The wastes affected by this change come primarily from three general treatability groups: chlorinated organics, petroleum wastes, and phthalate wastes. The Agency believes that this change is consistent with the changes made to the wastewater standards in the final Third Third rule. It should be noted, however, that any technology not otherwise prohibited (e.g., impermissible dilution) may be used to meet the concentration-based treatment standards for these wastewaters, including incineration.

Finally, during the development of the Third Third rule, the Agency determined that for pentachloroethane (a regulated constituent in K018, K028, and K030), complications arose in terms of how reliably the constituent could be quantified (55 FR 22611). As such, the Agency made a decision to promulgate a method (or methods) of treatment, rather than a constituent-specific standard. Today, EPA is deleting pentachloroethane from further regulation in the wastewater forms of K018, K028, and K030, as discussed in the January 9, 1992 proposed rule. Treatment of other constituents will act as reliable surrogates for the treatment of pentachloroethane in these wastes.

PROMULGATED TREATMENT STANDARDS FOR VARIOUS F AND K WASTEWATERS

Waste code and regulated organic constituent	Revised standard (mg/l)
K015:	
Anthracene	0.059
Benzal chloride	0.28
Benzo(b and/or k)fluoranthene	0.055
Phenanthrene	0.059
Toluene	0.080
K016:	
Hexachlorobenzene	0.055
Hexachlorobutadiene	0.055
Hexachlorocyclopentadiene	0.057
Hexachloroethane	0.055
Tetrachloroethene	0.056
K018:	
Chloroethane	0.27
Chloromethane	0.19
1,1-Dichloroethane	0.059
1,2-Dichloroethane	0.21
Hexachlorobenzene	0.055
Hexachlorobutadiene	0.055
Pentachloroethane	NA
1,1,1-Trichloroethane	0.054
Hexachloroethane	0.055
K019:	
bis(2-chloroethyl)-ether	0.033
Chlorobenzene	0.057
Chloroform	0.046

PROMULGATED TREATMENT STANDARDS FOR VARIOUS F AND K WASTEWATERS—Continued

Waste code and regulated organic constituent	Revised standard (mg/l)
1,2-Dichloroethane	0.21
p-Dichlorobenzene	0.09
Fluorene	0.059
Hexachloroethane	0.055
Naphthalene	0.059
Phenanthrene	0.059
1,2,4,5-Tetrachlorobenzene	0.055
Tetrachloroethene	0.056
1,2,4-Trichlorobenzene	0.055
1,1,1-Trichloroethane	0.054
K020:	
1,2-Dichloroethane	0.21
1,1,2,2-Tetrachloroethane	0.057
Tetrachloroethene	0.056
K023: Phthalic anhydride (measured as phthalic acid)	0.069
K024: Phthalic anhydride (measured as phthalic acid)	0.069
K028:	
1,1-Dichloroethane	0.059
Trans 1,2-Dichloroethane	0.054
Hexachlorobutadiene	0.055
Hexachloroethane	0.055
Pentachloroethane	NA
1,1,1,2-Tetrachloroethane	0.057
1,1,2,2-Tetrachloroethane	0.057
Tetrachloroethene	0.056
1,1,1-Trichlorethane	0.054
1,1,2-Trichloroethane	0.054
K030:	
o-Dichlorobenzene	0.088
p-Dichlorobenzene	0.09
Hexachlorobutadiene	0.055
Hexachloroethane	0.055
Pentachloroethane	NA
1,2,4,5-Tetrachlorobenzene	0.055
Tetrachloroethene	0.056
1,2,4-Trichlorobenzene	0.055
K048:	
Benzene	0.14
Benzo(a)pyrene	0.061
Bis(2-ethylhexyl)-phthalate	0.28
Chrysene	0.059
Di-n-butyl phthalate	0.057
Ethylbenzene	0.057
Fluorene	0.059
Napthalene	0.059
Phenanthrene	0.059
Phenol	0.039
Pyrene	0.067
Toluene	0.080
Xylenes (total)	0.32
K049:	
Anthracene	0.059
Benzene	0.14
Benzo(a)pyrene	0.061
Bis(2-ethylhexyl)-phthalate	0.28
Carbon disulfide	0.014
Chrysene	0.059
2,4-Dimethylphenol	0.036
Ethylbenzene	0.057
Napthalene	0.059
Phenanthrene	0.059
Phenol	0.039
Pyrene	0.067
Toluene	0.080
Xylenes (total)	0.32
K050:	
Benzo(a)pyrene	0.061
Phenol	0.039
K051:	
Acenaphthene	0.059
Anthracene	0.059
Benz(a)anthracene	0.059
Benzene	0.14

PROMULGATED TREATMENT STANDARDS FOR VARIOUS F AND K WASTEWATERS—Continued

Waste code and regulated organic constituent	Revised standard (mg/l)
Benzo(a)pyrene	0.061
Bis(2-ethylhexyl)-phthalate	0.28
Chrysene	0.059
Di-n-butyl phthalate	0.057
Ethylbenzene	0.057
Fluorene	0.059
Napthalene	0.059
Phenanthrene	0.059
Phenol	0.039
Pyrene	0.067
Toluene	0.080
Xylenes (total)	0.32
K052:	
Benzene	0.14
Benzo(a)pyrene	0.061
o-Cresol	0.11
p-Cresol	0.77
2,4-Dimethylphenol	0.036
Ethylbenzene	0.057
Naphthalene	0.059
Phenanthrene	0.059
Phenol	0.039
Toluene	0.080
Xylenes (total)	0.32
K087:	
Acenaphthalene	0.059
Benzene	0.14
Chrysene	0.059
Fluoranthene	0.068
Indeno(1,2,3-cd)pyrene	0.055
Naphthalene	0.059
Phenanthrene	0.059
Toluene	0.080
Xylenes (total)	0.32
K093: Phthalic anhydride (measured as Phthalic acid)	0.069
K094: Phthalic anhydride (measured as Phthalic acid)	0.069
U028: Bis(2-ethylhexyl)-phthalate	0.28
U069: Di-n-butyl phthalate	0.057
U088: Diethyl phthalate	0.2
U102: Dimethyl phthalate	0.047
U107: Di-n-octyl phthalate	0.017
U190: Phthalic anhydride (measured as phthalic acid)	0.069

NA: Not applicable.

C. Revisions to Treatment Standards for K061, K062, and F006

With two exceptions, the Agency is promulgating as proposed the treatment standards for the iron and steel process wastes K061 and K062 and the electroplating waste F006. The January 9, 1992, proposed rule (57 FR 975–977) contained three major provisions for K061, K062, and F006: (1) Removing the Low Zinc and High Zinc subcategories for K061 electric arc furnace dust wastes and establishing the high zinc subcategory nonwastewater standards for all K061 nonwastewaters regardless of zinc level; (2) setting alternative treatment standards for K062 and F006 nonwastewaters with recoverable amounts of nickel and chromium; and (3) excluding from regulation as a hazardous waste nonwastewater

residues generated from high-temperature metals recovery (HTMR) treatment of F006 and K062 provided the residues meet the designated generic exclusion levels, they are disposed of in a subtitle D unit, and they do not exhibit one or more of the hazardous waste characteristics.

One of the two changes the Agency has made between proposal and promulgation consists of basing the promulgated generic exclusion on a different fate-and-transport model than the proposed exclusion and thus promulgating different exclusion levels for several contaminants. The second change is that EPA is promulgating neither treatment standards nor exclusion levels for vanadium, thus effectively deleting vanadium from the K061, K062, and F006 rulemaking.

The August 19, 1991 (56 FR 41164), final rule for K061 (electric arc dust) set numerical treatment standards for high-zinc K061 nonwastewaters based on the performance of high-temperature metals recovery units. This final rule also promulgated a generic exclusion from the derived-from rule for nonwastewater residues generated from HTMR processing of K061 wastes.

Today's rule extends both the HTMR-based treatment standards and the generic exclusion criteria for HTMR residues to K062 (steel finishing pickle liquor) and F006 (electroplating wastewater treatment sludges) nonwastewaters.

1. Removal of the Low Zinc Subcategory for K061 Wastes

The Agency is today transferring the treatment standards promulgated for high-zinc (greater than 15 percent) K061 nonwastewaters (56 FR 41164, August 19, 1991) to low-zinc K061 nonwastewaters; by doing this, the Agency eliminates the low- vs. high-zinc categories and regulates all K061 nonwastewaters with the same numerical treatment standards and generic exclusion levels. The promulgated treatment standards are based on the performance of high-temperature metals recovery (HTMR); however, since these are concentration-based standards, any technology, including stabilization, that meets the treatment standards can be used.

2. Alternative Treatment Standards for F006 and K062 Nonwastewaters Based on High Temperature Metals Recovery (HTMR)

The Agency is promulgating alternative treatment standards for K062 and F006 nonwastewaters as proposed. These treatment standards, based on HTMR, are the same as those promulgated in August 1991 for "high-zinc" nonwastewaters and the standards promulgated in this rule for all K061 nonwastewaters.

EPA is also promulgating a new regulatory section (40 CFR 268.46) for any treatment standards serving as alternates for compliance with standards in 40 CFR 268.41, 268.42 and 268.43.

The alternative treatment standards for F006 includes standards for cyanides. Although the Agency has no HTMR performance data for cyanide, EPA believes (as discussed in the proposed rule at 57 FR 975) that HTMR treats cyanide to a level comparable to incineration. Since no commenters challenged this belief and there is no reason to believe HTMR units will not destroy cyanide as efficiently as incineration, EPA is promulgating alternative cyanide standards for F006 developed from incinerator performance. The HTMR-based alternative treatment standards are higher numerically for several constituents (chromium in K062; cadmium, nickel and silver in F006) than the original stabilization-based standards. These higher numbers are acceptable to the Agency as alternative treatment standards because the HTMR-based alternatives regulate more constituents than the original stabilization-based standards, and also because they express the Agency's preference for recycling methods.

3. Generic Exclusion of F006 and K062 HTMR Nonwastewater Residues

EPA is promulgating generic exclusion levels for nonwastewater residues generated from HTMR of F006 and K062 in rotary kilns, flame reactors, electric furnaces, plasma arc furnaces, slag reactors, rotary hearth furnace/electric furnace combinations, or industrial furnaces. These residues can go into subtitle D units if the residues meet the generic exclusion levels for all constituents and these residues that do not exhibit any of the hazardous characteristics. The Agency received a variety of comments on the generic exclusion for all K061, K062, and F006 HTMR residues. Some of the comments supported this extension of the generic exclusion: Others objected to the exclusion levels and to the Agency's decision to limit the generic exclusion to HTMR residues.

Although the vertical and horizontal spread (VHS) model was the basis for calculating the proposed generic exclusion levels, EPA indicated in the January 9, 1992 proposed rule preamble that it also was considering basing exclusion levels on an alternative model, the EPA Composite Model for Landfills (EPACML) (see 57 FR 976; see also 56 FR 67197, December 30, 1991 for adopting use of the model in site specific delistings). Most commenters discussed the EPACML alternative and urged the Agency to use it rather than the VHS model to develop generic exclusion levels for this rule.

The most salient consequence of the change in models from VHS to EPACML is that EPACML generic exclusion levels for arsenic and zinc are higher than the BDAT standards in the HTMR-based alternative treatment standards for K062 and F006 and in the HTMR-based BDAT standards for K061. EPA retained the EPACML-based generic exclusion numbers regardless of their values relative to HTMR BDAT standards because the generic exclusion is independent from BDAT in such a way that EPA has no reason to adjust generic exclusion levels in order to reconcile them with BDAT standards when the numerical values differ significantly for a particular compound. The different, and occasionally overlapping, sets of numbers for BDAT standards and generic exclusion levels reflect the fact that these are two different sets of regulatory controls on HTMR residues from K061, K062, F006. BDAT standards apply to residuals from treatment of hazardous waste—which are themselves still hazardous wastes because of the derived-from rule intended for land disposal. They reflect the best level of performance that treatment technology can provide and they apply to hazardous wastes concentrations of contaminants determined (by the model) to pose minimal health risks when the waste is disposed in a unit permitted under RCRA Subtitle D. A generic exclusion takes a waste out of the hazardous-waste universe because when a waste meets generic exclusion levels the exclusion essentially exempts it from subtitle C management.

The Agency also received a number of significant comments on the proposal to grant a generic exclusion for residues from HTMR processing of F006 and K062 nonwastewaters. Many commenters favored the proposed exclusion. Waste Management Inc., (WMI) and the Hazardous Waste Treatment Council (HWTC) objected, however, on several grounds.

WMI submitted comments similar to those it previously submitted for the K061 high-zinc subcategory rule. In particular, the commenter objected to the generic exclusion for a number of reasons. First, there are relatively few HTMR treaters of F006 and K062; site-specific delistings are a more

appropriate alternative. Second, excluding slag to be used as a road-base material is an inappropriate application of the VHS. Third, EPA based the exclusion decision on inadequate data regarding the different types of HTMR processes that are potentially subject to the exclusion and on inadequate data on the fate of organic species that may be present in the feedstocks. Fourth, the VHS model to exclude K061 did not consider exposures from runoff or wind dispersion. Fifth, there is concern about unaddressed air emissions problems with the HTMR processes themselves.

The Agency responded to the substantive issues in these comments in the K061 high-zinc subcategory final rulemaking. EPA's position remains that, although the generic exclusion may affect a small number of facilities at the time of promulgation, other HTMR facilities may be constructed in the future. More important, however, EPA's generic exclusion decision in regard to these wastes depends on the potential hazard (e.g., waste volume, composition) of the waste generated, not on the number of facilities generating the waste.

In today's final rule, the Agency is using EPACML instead of the VHS model to represent more accurately the groundwater hydraulics at landfills. EPACML predicts the potential for groundwater contamination from wastes that are co-disposed with municipal solid waste in an unlined land disposal unit and is, therefore, an appropriately conservative methodology for evaluating the risk from landfilled HTMR residue. In addition, as in the August 19, 1991 rule for K061, the Agency is limiting the generic exclusion to F006 and K062 HTMR residues, among other things, disposed of in a subtitle D unit and thus is not evaluating the appropriateness of EPACML for quantifying the safety of any use constituting a disposa1 scenario such as-use as roadbase. Consequently, this generic exclusion does not cover material to be used as a product.

The Agency disagrees with the comment that inadequate data were collected from the different types of HTMR processes that are potentially subject to exclusion. In determining the BDAT treatment levels, the Agency reviewed all the treatment performance data available from various HTMR processes. (These data are available in the Background Document supporting this rulemaking). EPA then calculated the final treatment standards based on the data from well-designed and well-operated HTMR processes. Thus, EPA believes that it has adequately characterized the performance of the major HTMR processes with respect to achieving the BDAT treatment levels. EPA notes further that since the exclusion levels are essentially risk-based numbers (i.e., the numbers are based either on the model or are the slightly lower technology-based numbers), the issue of the sufficiency of treatment performance characterization data does not affect the validity of the generic exclusion standards. To address the Agency's intent to establish "minimize threat levels" which could require modification of the purely technology-based BDAT standards, EPA is evaluating the alternatives proposed in the Hazardous Waste Identification Rule (HWIR) (see 57 FR 21450, May 20, 1992).

In response to the commenter's concern about the fate of organic species in the feed to HTMR processes, the Agency remains convinced that, considering that HTMR units operate at higher temperatures and longer residence times than incinerators, that HTMR units will destroy organic constituents as well as incinerators. All available data showed no quantifiable levels of organic constituents in treated residues, confirming EPA's engineering opinion; nor do the processed wastes typically contain appreciable concentrations of organics. (The Agency notes that while developing the BDAT treatment standards for nonwastewater HTMR K061 residues it investigated whether toxic organic constituents were present in the HTMR residues. The available treatment performance data did not indicate the presence of BDAT list organic constituents at detectable levels). In addition, as part of its delisting petition request for residual slag from treatment of K061 waste by HTMR, Horsehead Resource and Development Company (HRD) analyzed residual slag samples for sixteen polycyclic aromatic hydrocarbon (PAHs) constituents most likely to be products of incomplete combustion. None of the sixteen PAHs was detected in any of the samples generated from coke-fired and coal-fired processing.

WMI objected that using the VHS model to generate generic exclusion levels for K061, K062, and F006 is not appropriate because it only considered contaminant transport in groundwater and excludes exposures from run-off or wind dispersion.

As already indicated, the Agency has chosen to limit the scope of the current generic exclusion to slag disposed of in a subtitle D unit. The Agency is confident that the EPACML is appropriate for a land disposal scenario and is therefore finalizing the generic exclusion for F006 and K062 residues from HTMR processes with the condition that such disposal occur. See the discussion of the EPACML model at 56 FR 32993, July 18, 1991.

The Hazardous Waste Treatment Council (HWTC) also objected to the Agency's proposal to include F006 and K062 residues resulting from HTMR processing in the generic exclusion. HWTC was concerned that the exclusion was an automatic, self-implementing process requiring neither analytical verification nor review by EPA or the public. Section IV.E. of today's rule describes EPA's revised recordkeeping requirements for generically excluded HTMR K061, K062, and F006 residues (and characteristic wastes). This section explains EPA's choice of a tracking and handling system for generically excluded wastes.

With respect to the issue concerning air emissions, the Agency notes that all existing HTMR units use baghouses, wet scrubbers, or some other form of air pollution control device (APCD) to capture particulate matter present in the off-gases. These units may also be addressed pursuant to amended section 112 of the Clean Air Act. The amended section 112 requires the application of maximum achievable control technology (MCAT) controls to major sources of hazardous air pollutants, plus further risk-based controls (if necessary) at a later time. Therefore, EPA does not believe that these units need also be subject to the BIF regulations (see 56 FR 7142, February 21, 1991 for further discussion on EPA's basis for not regulating air emissions from these units under subtitle C).

Another issue was HWTC's objection to EPA's granting a generic exclusion for HTMR residuals from processing F006 and K062 while denying the exclusion for other non-HTMR recycling and treatment technologies treating F006 and K062.

The Agency based the decision to grant a generic exclusion for HTMR residues only for the following reasons: The generic exclusion will only apply to those nonwastewater residues generated by HTMR processes and not to other non-HTMR processes, such as hydrometallurgical processes or stabilization. The Agency currently lacks sufficient data to evaluate the residues from hydrometallurgical processes or to develop an appropriate sampling and analysis methodology for residues from hydrometallurgical processes.

The Agency presented the reasons for not generically excluding stabilized residues in the August 19, 1991 K061

high zinc final rule (56 FR 41173). The HTMR residues demonstrate consistent leaching behavior whereas stabilized matrices do not. The chemical bonding that occurs in the high temperature and oxidation/reduction conditions within the HTMR units is inherently different from the bonding that forms the basis of cementitious and pozzolanic stabilization. In addition, the kinetics of the reaction forming the bonds in these HTMR processes are superior in terms of immobilizing metals to the kinetics of bond formation in cementitious reactions because they are faster. (Common forms of cement are not typically considered set until after a minimum of 72 hours and often not considered fully cured until after 28 days). Furthermore, stabilization is highly matrix-dependent and prone to chemical interference. Most commercial stabilization facilities develop special mixes to control curing time and/or product integrity.

EPA reminds the regulated community that it is not prohibiting stabilization as treatment for K061, K062, and F006 waste, and that facility-specific delisting remains an option for stabilized K061, K062, and F006 wastes. Because of the inherent differences between HTMR and stabilization stated above and because existing data do not support a generic exclusion for stabilized K061, K062, and F006 wastes, the Agency chooses not to extend generic exclusion to these stabilized residues.

D. Vanadium: Treatment Standards and Appendix VIII

The Agency is deferring the expansion of the list of inorganic constituents in appendix VIII and is not including vanadium in the treatment standards. These remain technical issues that EPA has not yet resolved in the brief time allocated in promulgating today's regulations. The proposed HWIR (57 FR 21450, May 20, 1992) identified exclusion criteria for Vanadium, and the Agency is continuing to assess how to address Vanadium in HWIR and future Land Disposal Restrictions.

Because of concerns about Vanadium's low volatility and consequent tendency to accumulate in slag residual, the August 19, 1991, rule for high-zinc K061 nonwastewaters reserved vanadium rather than set a numerical treatment standard. Data reviewed by the Agency for the high-zinc rule since that time does not support setting a treatment standard for vanadium. EPA is therefore not promulgating treatment standards for vanadium in K061 nor promulgating vanadium standards in alternative standards for K062 and F006 wastes in this rule.

FINAL GENERIC EXCLUSION LEVELS FOR K061 AND K062 HTMR RESIDUES

[Nonwastewaters]

Regulated constituent	Maximum for any single composite sample—TCLP (mg/l)
Antimony	0.10
Arsenic	0.50
Barium	7.6
Beryllium	0.010
Cadmium	0.050
Chromium (total)	0.33
Lead	0.15
Mercury	0.009
Nickel	1.0
Selenium	0.16
Silver	0.30
Thallium	0.020
Zinc	70

FINAL GENERIC EXCLUSION LEVELS FOR F006 HTMR RESIDUES

[Wastewaters]

Regulated constituent	Maximum for any single composite sample—TCLP (mg/l)
Antimony	0.10
Arsenic	0.50
Barium	7.6
Beryllium	0.010
Cadmium	0.050
Chromium (total)	0.33
Lead	0.15
Mercury	0.009
Nickel	1.0
Selenium	0.16
Silver	0.30
Thallium	0.020
Zinc	70

Regulated constituent	Maximum for any single composite sample—(mg/kg)
Cyanide (Total)	1.8

FINAL TREATMENT STANDARDS FOR K061

[Low and high zinc subcategories, nonwastewaters]

Regulated constituent	Maximum for any single composite sample—TCLP (mg/l)
Antimony	2.1
Arsenic	0.055
Barium	7.6.
Beryllium	0.014
Cadmium	0.19
Chromium (Total)	0.33
Lead	0.37
Mercury	0.009
Nickel	5.0
Selenium	0.16
Silver	0.30
Thallium	0.078
Zinc	5.3

TREATMENT STANDARDS FOR K062

[Nonwastewaters]

Regulated constituent	Alternative treatment standards based on HTMR performance maximum for any single composite sample—TCLP (mg/l)	Treatment standards based on stabilization maximum for any single grab sample—TCLP (mg/l)
Antimony	2.1	NA
Arsenic	0.055	NA
Barium	7.6	NA
Beryllium	0.014	NA
Cadmium	0.19	NA
Chromium (Total)	0.33	0.094
Lead	0.37	0.37
Mercury	0.009	NA
Nickel	5.0	NA
Selenium	0.16	NA
Silver	0.30	NA
Thallium	0.078	NA
Zinc	5.3	NA

NA—Not Applicable.

TREATMENT STANDARDS FOR F006

[Nonwastewaters]

Regulated constituent	Alternative treatment standards based on HTMR performance maximum for any single composite sample—TCLP (mg/l)	Treatment standards based on stabilization maximum for any single grab sample—TCLP (mg/l)
Antimony	2.1	NA
Arsenic	0.055	NA
Barium	7.6	NA
Beryllium	0.014	NA
Cadmium	0.19	0.066
Chromium (Total)	0.33	5.2
Lead	0.37	0.51
Mercury	0.009	NA
Nickel	5.0	0.32
Selenium	0.16	NA
Silver	0.30	0.072
Thallium	0.078	NA
Zinc	5.3	NA

Regulated constituent	Alternative treatment standards based on HTMR performance maximum for any single composite sample (mg/kg)	Treatment standards based on alkaline chlorination maximum for any single grab sample (mg/kg)
Cyanides (Total)	1.8	590
Cyanides (Amenable)	NA	30

NA—Not Applicable.

E. Notification and Certification for Characteristic Wastes

The Agency is finalizing a revision to the recordkeeping requirements for certain wastes that meet LDR standards and are treated to nonhazardous levels. The change in notification and certification requirements affects two groups of wastes: characteristic wastes that meet LDR standards and are treated below the regulatory levels established for characteristic wastes, and K061, K062, and F006 residues from high temperature metal recovery that meet the generic exclusion levels and do not exhibit any hazardous waste characteristics. As proposed (see 57 FR 977), the Agency will no longer require the generator or treater to submit to EPA or an authorized state a notification and certification for each off-site shipment of these wastes. Instead, amended § 268.9(d) and § 261.3(c)(2)(ii)(C) now require that the generator or treater prepare the notification and certification for the initial shipment only, place one copy in the generator's or treater's own files, and send another copy to the appropriate EPA region or authorized state. The documentation must be retained by the generator or treater for at least five years. The generator's or treater's records must be updated if the process or operation generating the waste changes and/or if the subtitle D facility receiving the waste changes; however, the generator or treator need only notify EPA or an authorized state on an annual basis (at the end of the calendar year but no later than December 31) if the process or operation generating the waste changes or if the subtitle D facility receiving the waste changes. The document must include the name and address of the subtitle D facility receiving the waste, a waste description, applicable treatment standards, and a certification that the standards have been met. For K061, K062, and F006 residues from high temperature metal recovery, the recordkeeping requirements in § 261.3(c)(2)(ii)(C) supersede those in § 268.7(a)(6).

The Agency proposed this change because the existing requirements appeared to pose an unnecessary paperwork burden. It did not appear necessary for EPA or the states to be notified concerning every shipment of characteristic wastes and K061, K062, and F006 residues treated to nonhazardous levels; yet, at the same time, EPA and the states still need to be able to verify such treatment when conducting inspections of waste management operations. The Agency requested comment on the paperwork burden of the existing requirements, on its proposal, and on several alternative requirements that would also reduce the recordkeeping burden (see 57 FR 977).

Several commenters described the existing burden as "significant" or "onerous." One commenter said the requirement is especially burdensome for facilities with multiple shipments per day and is unnecessary since the waste is deemed nonhazardous. Another commenter stated that one of its plants had submitted over 1300 identical notification and certification documents in an eighteen-month period as a result of the § 268.9(d) requirement. Still other commenters said the existing requirement is not onerous, since facilities can use fill-in-the-blank type forms.

The majority of commenters, however, supported the requirement being finalized today. Those who supported the requirement promulgated today interpreted it to require a reasonable level of recordkeeping while providing readily available information to allow identification of the subtitle D facilities receiving the waste. Several of these commenters said the alternative proposals were overly burdensome without providing attendant benefits.

Commenters who supported the existing recordkeeping requirements argued that submittal of a certification to EPA is the only incentive for generators to ensure that excluded waste going to subtitle D units is properly treated. One commenter argued that the new proposal would weaken the RCRA system of cradle-to-grave protection. Another commenter advocated notification to the subtitle D facility receiving the waste, because only the generator or treater has sufficient information to determine if it meets the land disposal restrictions.

After considering all comments, EPA is finalizing the proposed revision because it is confident that there is little need for documentation of every shipment of the identical nonhazardous waste, nor is there a need for EPA or states to be informed of each shipment for disposal, as long as the information is available to inspectors. As for requiring notification of subtitle D facilities receiving the waste, EPA remains concerned that such a requirement would be counterproductive (see discussion at 55 FR 22662 to 22663).

F. Wastes Listed Because They Exhibit a Characteristic

In the January 9, 1992 proposed rule, EPA proposed a clarifying change to the existing regulations dealing with the applicability of land disposal prohibitions to wastes that are listed solely because they exhibit a non-toxic characteristic of hazardous wastes (see 57 FR 978). An example are the non-chlorinated solvents listed as F003 for which EPA promulgated numerical treatment standards in 1986. EPA had previously stated that such wastes cannot be diluted to meet the treatment standards and that these wastes must be treated to meet the part 268 treatment standards (56 FR 3871, January 31, 1991; 57 FR 978). Put another way, the land disposal prohibitions would apply at the point of generation for such wastes. EPA's proposed clarification was that the same principles apply with respect to mixtures of wastes listed because they exhibit a characteristic and other solid wastes (57 FR 978).

Upon reviewing this issue further, however, EPA realized that the principle appeared inconsistent (or could be read to be inconsistent), with respect to wastewaters listed because they exhibit a characteristic, with the rules adopted in the Third Third regulation regarding management of characteristic wastewaters. In the Third Third regulation, EPA applied prohibitions at the point of disposal for wastes that are hazardous because they exhibit a characteristic and are disposed in non-hazardous Class I injection wells; the Agency also applied dilution prohibitions at the point of disposal for most characteristic wastewaters managed in wastewater treatment systems ultimately discharging pursuant to sections 307 or 402 of the Clean Water Act. See §§ 148.1(d), 268.3(b); and 55 FR 22656–22659 (June 1, 1990). This would indicate that wastewaters which are listed because they exhibit a characteristic would not be prohibited from disposal by underground injection provided they do not exhibit a characteristic when they are injected. In addition, such wastewaters can permissibly be diluted to meet the treatment standards before management in surface impoundments, provided the impoundments are part of treatment systems that are discharging pursuant to Clean Water Act requirements and provided the waste does not exhibit a characteristic when placed in an impoundment.

After considering this issue, and after soliciting and receiving further public comment on the point, EPA is interpreting its rules so as to be consistent with the approach of the Third Third rule with respect to wastewaters that exhibit a characteristic for the reasons set out in that rule. Thus, prohibitions for wastewaters that are listed solely because they exhibit a characteristic

will apply at the point of disposal as explained above. Put another way, EPA is reading the existing rules in §§ 148.1 and 268.3(b) as applying to wastewaters that are listed solely because they exhibit a non-toxic characteristic.

The Agency is not reconsidering, or reopening, the issue of treatment standards for nonwastewaters that are listed because they exhibit a characteristic. Thus, such wastes cannot be land disposed until treated to meet the applicable treatment standards, and cannot be diluted to meet those treatment standards (56 FR 3871). This would also be true of mixtures involving such listed wastes, since otherwise the prohibitions would have no real meaning.

Finally, with respect to wastewaters, the Agency recognizes that the issue of the legality of the Agency's application of prohibitions for characteristic wastewaters at the point of disposal has been submitted for judgment to a panel of the District of Columbia Circuit Court as part of the litigation over the Third Third rule (*Chemical Waste Management* v. *EPA*, No. 90–1230). The Agency's action today clarifying that the same rules apply to wastewaters listed because they exhibit a characteristic and other characteristic wastewaters thus would be subject to the decision reached in this litigation.

G. Storage and Treatment in Containment Buildings

In some cases, hazardous wastes prohibited from land disposal must be stored for short periods of time to facilitate recycling, recovery, treatment, or transport off site to meet LDR standards; treatment may also be performed while these materials are being stored. Some of these non-liquid hazardous wastes are generated in large volumes (often in batches), and may not be amenable to management in RCRA tanks or containers. These wastes are sometimes stored or treated on concrete pads or similar floors inside buildings.

EPA currently classifies this type of management unit as an indoor waste pile, which EPA considers to be a land disposal unit based on the statutory definition of land disposal in section 3004(k). See 52 FR 40605 (November 7, 1986). Lead slags and spent potliners from primary aluminum production are examples of hazardous wastes that are amenable to management in such units because of their volume or bulk; contaminated debris may also be managed in such units. EPA believes that management of a hazardous waste inside a unit designed and operated to contain the hazardous waste within the unit—akin to storage in a RCRA tank or container—does not pose the types of potential harms or uncertainties Congress sought to address in defining land disposal, as it did in RCRA section 3004(k). These include uncertainties regarding containment of hazardous constituents placed on the land and the potential for persistence, toxicity, mobility and bioaccumulation of hazardous wastes placed on the land. A unit designed, constructed, and operated to contain the hazardous waste within it may, moreover, fulfill the congressional goal of waste management that is protective of human health and the environment. See section 3004(d)(1)(A)–(C) and 1003(a)(5).

EPA is today promulgating standards allowing management of hazardous wastes, including but not limited to lead slags, spent potliners, and contaminated debris within units, to be termed "containment buildings", which will not be considered placement on the land and thus not constitute land disposal as defined in section 3004(k) of RCRA. To allow storage and treatment of prohibited wastes in containment buildings, EPA today is establishing a new definition of containment building, amending the existing definition of pile to exclude containment buildings, and including containment buildings within those units covered by § 268.50 as permissible for storage of prohibited wastes (since these buildings are no longer land disposal units), albeit subject to the prohibition on extended storage. EPA is also establishing specific design and operating standards for such units under §§ 264 and 265, and allowing generators' containment buildings to be eligible under § 262.34 for the 90-day generator provisions if their unit(s) meets all of the technical requirements for containment buildings (refer to discussion on 90-day applicability upcoming in this section).

Under today's rule, all containment buildings—both permitted and unpermitted—must achieve the same level of performance. Accordingly, EPA today is promulgating standards that require containment buildings operating under the part 265, subpart DD interim status standards to be designed, operated, and maintained to meet the same design and operating requirements as permitted containment buildings. These are either the design and operating standards in subparts DD of parts 264 or 265.

Virtually all public comments supported the establishment of this new type of management unit. The rule promulgated today incorporates only minor changes from the proposed rule.

To provide adequate time for design and construction of containment buildings, the effective date for these provisions shall be February 18, 1993. However, owner/operators who wish to begin operating containment buildings under these provisions prior to the effective date may do so provided that they notify the Regional Administrator of their intent, and they comply with the requirements of subpart DD prior to beginning operation.

1. Containment Buildings Are Not Land Disposal Units

The final rule indicates that containment buildings are not land disposal units. Thus, prohibited wastes can be stored in containment buildings without first meeting a treatment standard.

We explain below in detail how containment buildings are defined. However, the key features for determining that they are not land disposal units are that wastes are stored indoors in a secure structure (securely walled, roofed, and floored) that is designed to provide containment comparable to that provided by tanks or containers. EPA sees no statutory command precluding Agency discretion to define such units as not involving land disposal, nor did any commenter suggest that the Agency was barred from this determination. Moreover, storage in such units does not raise the types of environmental concerns and uncertainties (see section 1002(b)(7) and 3004(d)(1)(A)–(C)) that Congress sought to address in requiring hazardous wastes to be pretreated before being land disposed. Also, by defining containment buildings as not involving land disposal, the Agency is preventing the anomaly of bulk hazardous wastes not amenable to tank storage, yet requiring storage before treatment, being unable to be legally stored because non-tank or container storage would be defined as land disposal. An example is battery parts and groups that must be staged before being smelted. (55 FR 22637.) Accordingly, EPA is exercising its discretion to define containment buildings as not being land disposal units.

2. Definition of Containment Building

EPA today defines in § 260.10 a new unit, "containment building," as a "hazardous waste management unit that is used to store or treat hazardous waste under the provisions of subpart DD of parts 264 and 265." Subpart DD of parts 264 and 265 enumerates the design and operating standards for these units that ensure containment comparable to that of a RCRA tank or container. EPA is

also modifying the definition of "waste pile" to exclude these units.

Under today's rule, a containment building unit is not defined as land disposal pursuant to RCRA section 3004(k) if the unit meets the requirements of § 264.1100 and § 265.1100. The unit must, among other things, be completely enclosed and have self-supporting walls, a primary barrier, designed to be sufficiently durable to withstand the movement of personnel, wastes, and handling equipment in the unit, a secondary containment system (unless the unit manages non-liquid wastes only or has obtained a variance from the secondary containment standard), a liquid collection system, and controls for fugitive dust. The floors, walls, and roof of the unit must be constructed of man-made materials with sufficient structural strength to support themselves, the waste contents, and any personnel and heavy equipment that operate within the unit. The unit also must be designed and operated to prevent tracking of materials out of the unit.

3. Applicability of the 90-Day Accumulation Exclusion in § 262.34

a. *Containment Buildings Are Eligible for 90-Day Status.* Under § 262.34, a generator may accumulate hazardous waste on-site for 90 days or less without a permit or without having interim status provided he complies with the requirements of subpart I, J, or W of 40 CFR part 265, among other requirements. To date, EPA has limited applicability of this 90-day provision to generators' containers, tanks, or drip pads (see 55 FR 50450, December 6, 1990). EPA today is extending the 90-day generator exemption in § 262.34 to include containment buildings. The extension of the 90-day generator exemption to containment buildings is consistent with the application of the 90-day generator exemption to similar types of hazardous waste storage units, e.g., tanks and containers.

Commenters to the proposed rule overwhelmingly supported the extension of the 90-day generator exemption to these units. Some commenters also suggested that EPA extend this exemption to all containment buildings; others suggested extending this exemption beyond 90 days. The 90-day generator provision is premised on the need to avoid undue interference with generators' production processes (45 FR 2730, February 26, 1980) and stands as a narrow exception to otherwise applicable permitting requirements. This rationale does not appear to apply to off-site facilities. Therefore, the Agency is not extending its applicability in today's rule. However, EPA notes that extensions may be granted to the 90-day time period under existing rules when certain specific circumstances apply (see 55 FR 50450, December 6, 1990).

Specific to the comments suggesting that EPA extend the 90-day generator provision to all containment buildings including off-site facilities, EPA is not taking action in today's rule. EPA will, however, take comment on a proposal to expand the 90-day generator exemption to all containment buildings in the upcoming proposal for petroleum contaminated debris to be deferred from the TC. At that time, the Agency will evaluate whether the Agency's narrow exemption for 90-day units to generators should be expanded to off-site units for all tanks, containers, and containment buildings.

b. *Documenting Compliance with 90-Day Limitations.* In the proposed rule, EPA requested comment on whether generators who store or treat hazardous waste in containment buildings pursuant to the 90-day accumulator provisions should be required to maintain on site, for the operating life of the containment building, a description of the procedures ensuring that no waste remains in the containment building for more than 90 days. EPA proposed that documentation of each waste removal be required in the generator's on-site files recording, at a minimum, the quantity of waste removed and the date and time of removal. EPA also noted that certain operations, for example, the continuous processing of wastes or blending of wastes, might complicate the generator's ability to determine when a particular waste volume ceased to be present within the containment building. EPA requested public comment on how best to ensure and document generator compliance with the requirement limiting the time waste may be accumulated within the containment building to 90 days or less.

Several commenters suggested a "mass balance" approach wherein the volume removed from a containment building over the course of 90 days would be required to be at least equal to the amount placed in the unit during that period to ensure compliance with the time limit. EPA does not believe that this would be adequate. While such an approach might ensure that the average residence time of wastes in the unit is less than 90 days, it could not assure that all wastes reside in the unit for less than that period.

Instead, EPA agrees with commenters who suggested that documented procedures ought to assure that each volume of waste resides in the unit for no more than 90 days. This requirement could be met in two ways: (1) By documenting that the unit is emptied at least once every 90 days, or (2) by having and documenting (in writing) the procedures in place to ensure that wastes in the unit are segregated by age and that no portion of the stored wastes is allowed to remain beyond the time limit. As part of that latter demonstration, owner/operators must document that the nature of their hazardous waste management operation is consistent with respecting that 90-day limit. For example, a generator who plans to use such a unit to accumulate waste for off-site shipment on a monthly basis should be able to meet this test; one who ships waste off site semi-annually could not do so. Given the statute's normal permitting scheme as well as the constraints on extended storage in section 3004(j), EPA believes this degree of assurance of actual waste turnover is justified.

EPA does not seek to require documentation of each individual addition or removal of waste from the unit; rather, the required written documentation must show that procedures are in place to ensure that individual additions and removals of wastes are consistent with the 90-day time limit for each portion of the wastes managed in the unit. However, if the generator cannot meet the 90-day time limit or if a hazardous waste is stored or treated in an off-site containment building, the unit must have interim status or a permit in accordance with existing regulations.

c. *Reclassification of Regulated Units to 90-Day Status.* EPA anticipates that some currently operating units that have been previously classified as waste piles will be converted to containment buildings as a result of today's rule. It is possible that there may be (or have been) releases of hazardous wastes from such units. When this rule was proposed, EPA raised the issue of whether unit-specific corrective action authority under RCRA should be retained for new units and for existing interim status or permitted units that subsequently become 90-day generators with containment buildings as their only RCRA activity. EPA pointed out that, even without RCRA corrective action authority, generators would still be liable for any releases under CERCLA.

Several commenters suggested that some or all units converted to containment buildings should not be subject to corrective action. While the Agency understands these commenters' concerns, the Agency believes that unit-specific corrective action is an

appropriate part of the standards for containment buildings to remediate releases that conceivably occur or may occur from the unit. Such standards are a routine part of every standard for a RCRA hazardous waste management unit, including 90-day generator units. See, e.g. § 265.196 (corrective action for tanks including 90-day tanks) and § 265.443(m) (corrective action for drip pads including 90-day drip pads). The Agency knows of no legal or policy justification for excluding these units from corrective action requirements (i.e., not redressing hazardous waste releases from such units).

However, new units operating under the 90-day generator provision will not trigger facility-wide corrective action under RCRA by themselves under the terms of today's rule, because no permit is required for their operations and the units have never had interim status or permits (see RCRA sections 3004(u) and 3008(h)). These units, however, must remediate unit-specific releases as just discussed, and also would be solid waste management units if the facility requires a RCRA permit for other units.

For previously regulated units, EPA expects that the "unit" for the purpose of corrective action will include the entire structure, or the entire portion of the structure operated, when the containment building is a part of a larger structure.

As noted above, 90-day containment buildings must meet the same substantive standards as permitted and interim status units. This includes a requirement of obtaining certification by a professional engineer that the unit is designed and constructed to meet the requirements for containment buildings and must maintain such certification at the facility (§ 262.34(a)(1)(iv)). The subject of such certifications is discussed at greater length below. Generators planning to convert to or install containment buildings in advance of the effective date for these requirements are required to place certifications for these units in the facility's operating record no later than 60 days from the date of initial operation of the unit as a containment building. After February 18, 1993, PE certification is required prior to operation of the unit.

4. Containment Building Requirements

The specific requirements for a containment building restrict the types of hazardous wastes that may be stored or treated in the unit and specify performance standards for the design and operation of the unit to ensure a measure of protection of human health and the environment greater than that provided by an indoor waste pile, and substantially equivalent to that provided by a RCRA tank or container. See subpart DD, parts 264 and 265.

a. *Acceptable Wastes.* Many commenters supported EPA's proposal to allow dry wastes or wastes with "very small quantities" of free liquids to be managed in containment buildings. Comments were divided on whether the term "very small" used in the proposal required an explicit definition or implied an unnecessary and arbitrary limit on the amount of liquid included in a hazardous waste to be managed in a containment building. Today's rule states that wastes managed in containment buildings not be liquid in form (i.e., flow under their own weight to fill the vessel in which they are placed, or contain so much liquid that they are readily pumpable) or release such large quantities of liquid into the unit that liquid removal systems cannot prevent accumulation of liquid to significant depths. (These liquid wastes can, of course, be managed in tanks and containers that are inside containment buildings.)

EPA developed the containment building standards so that owner/operators could store or treat hazardous wastes that are not liquid in form, and which are not amenable to management in tanks or containers (perhaps because the waste occurs in a bulky form, or because it is produced in great volume.) This can facilitate owner/operator compliance with the prescribed BDAT standards. However, any waste that is non-liquid in form can also be stored/treated in containment buildings even if the waste already comply with the land disposal restriction standards. The standards discussed below will ensure that these wastes will not pose a hazard to human health or the environment when managed in containment buildings.

Prior to incorporating these concepts into this rule, EPA considered developing a Policy Directive whereby certain hazardous wastes, i.e., aluminum spent potliners, recycled lead batteries, and possibly electric arc furnace dusts, were definitively identified as candidates for management within containment buildings. Although EPA believed wastes that are non-liquid in form could also be managed more practicably in containment buildings rather than tanks or containers, information on such wastes remained lacking. EPA considered two options regarding hazardous wastes eligible for management in these units: (1) All hazardous wastes, including contaminated debris; and (2) only contaminated debris and certain additional bulky, high volume hazardous wastes that EPA currently understands cannot be practicably stored/treated in tanks or containers. Public comments on the proposed rule stated that EPA should not limit eligibility to debris and certain bulky, high volume hazardous wastes or to specific waste codes, and that a specific limitation on the amount of liquid included in the waste was also not appropriate.

EPA sees no reason to restrict eligibility to only those hazardous wastes for which EPA has data available or to only prohibited wastes. When designed, constructed, and operated in accordance with the standards being promulgated today, a containment building managing hazardous waste that is non-liquid in form will ensure protection of human health and the environment.

Example: A secondary lead smelting facility recovers lead from battery plates and groups taken from lead-acid batteries. One of the steps involved in this process, battery cracking, necessarily generates wet lead-bearing materials. For process efficiency, among other reasons, free liquids are removed to the extent feasible prior to staging the materials for furnace feed. However, some residual free liquid remains and cannot be removed easily. In this example, the overall form of the material is non-liquid, even though some amount of free liquid remains despite attempts to remove it. These wastes are eligible for management in containment buildings.

Example: A facility is cleaning up an area containing contaminated soil. The excavated soil contains water in the soil matrix, and is at or near the point of saturation. Visual inspection of the soil reveals that the amount of free liquid expected to be released in a containment building is very small in comparison with the total volume of the waste and the liquids management capacity of the unit. This material may be managed in a containment building.

b. *Acceptable Activities.* Containment buildings can be used to store hazardous waste for such activities as treatment (including recovery or other recycling) or transport off site to meet LDR treatment standards. As noted elsewhere in today's rule, wastes may be treated in containment buildings as well as stored in them. Examples of such treatment could include some of the technologies discussed in appendix I to this preamble for treatment of contaminated debris. Many of these technologies require the use of liquid. In many cases, such treatment would be conducted in tanks or containers within such buildings, and the existing

standards for tanks and containers would apply. For example, a method for treating hazardous debris could include treatment in a tank within a containment building followed by storage for a short-period in the containment building. In this example, treatment in the tank would be regulated under the RCRA tank standards, while subsequent storage of the treated waste would be regulated under the containment building standards.

In other cases, treatment in tanks and containers as such may not be possible. For example, personnel may not be able to apply safely some of the prescribed debris treatment technologies to large bulky debris within a tank or container. Therefore, EPA is also allowing treatment that utilizes the addition of liquid as part of BDAT treatment in designated areas within containment buildings. Any drainage or accumulation of liquids applied to hazardous debris must comply with relevant regulations. EPA is requiring that liquids be removed from the containment building at the earliest practicable time in order to preserve the effectiveness of liquid containment systems (§ 264.1101(b)(2)(ii) and § 265.1101(b)(2)(ii)).

c. *Design and Operating Standards.* EPA is promulgating the following design and operating standards for permitted units, units operated under interim status, and units under the 90-day accumulation exemption. In general, the design and operating standards are intended to ensure containment of waste equivalent (or, with regard to air emissions superior) to the containment achieved by tanks. Thus, the units must be designed to contain releases to land through primary and in some cases secondary containment systems, and to contain potential particulate emissions as well. The unit is also to be designed to prevent exposure of waste to precipitation and wind. As noted above, EPA is determining that these units are not engaged in land disposal based on designs for this level of containment. Moreover, the design and operating standards should ensure protection of human health and the environment (as do the tank standards).

Thus, to distinguish these units from waste piles—i.e., land disposal units—hazardous wastes managed in these units must be fully contained within the unit. As such, the unit must be completely enclosed with a floor, walls and a roof to prevent exposure to precipitation and wind (§ 264.1101(a)(1) and § 265.1101(a)(1)). Many of the hazardous wastes currently managed in these waste piles may have significant volumes of fine particulates. EPA believes that enclosure within a structure, in conjunction with other measures to control fugitive dust emissions, will prevent the escape of these fine particulates from the unit. Although a number of commenters to the proposed rule did not believe complete enclosure to be necessary, EPA continues to regard this as key to ensuring complete containment of wastes managed in these units, and thus distinguishing these units from land disposal units such as piles.

i. Floors, Walls, and Roof. The floor, walls, and roof of the unit must be constructed of man-made materials with sufficient structural strength to support themselves, the waste contents, and any personnel and heavy equipment that operate within the unit. Fragile barriers that would not withstand repeated contact with handling equipment used in the unit thus are not suitable, and units designed with such ineffective barriers would not be containment buildings. Operating events such as deliberate or accidental placement of materials against containment walls must be taken into account in designing and constructing the unit. Factors such as settlement, frost-heave, and exposure to wind force must also be considered. All surfaces to be in contact with hazardous wastes must be chemically compatible with those wastes. Because the intended use for these units is short-term storage or treatment, the unit must be designed to accommodate appropriate levels of loading and unloading activity during its operating lifetime. (See § 264.1101(a)(2) and § 265.1101(a)(2).)

ii. Primary and Secondary Containment. EPA is requiring several measures to ensure that hazardous wastes are managed in a fashion that ensures containment of contaminants and prevents releases into the environment. All containment buildings must be equipped with a primary barrier designed and constructed of materials to prevent hazardous wastes from being accidentally or deliberately placed on the land beneath or outside the unit. The design and construction of the primary barrier will vary depending on the type of waste to be managed in the unit. For containment buildings used to manage wastes without free liquids, the primary barrier may be a concrete floor if the wastes to be managed will not migrate into the concrete matrix. Containment buildings used to manage wastes with even small amounts of free liquids must be provided with a primary barrier designed and constructed of materials to prevent migration of hazardous constituents into the barrier and a liquid collection and removal system that will minimize the accumulation of liquid on the primary barrier (§ 264.1101(b)(2) and § 265.1101(b)(2)). In this case, the primary barrier might be a steel or flexible membrane liner covered by a concrete wear surface. The liquid collection and removal system above the primary barrier should be designed, constructed, and operated to minimize the accumulation of liquids above the primary barrier. EPA expects that a minimum one degree slope for the primary barrier combined with appropriate means for collecting and removing liquids (e.g. troughs, drains, dikes, or sumps and/or pumps as necessary) will meet this goal. The determination of the presence of free liquids must be made using, for example, the paint filter test (EPA test method SW-86) if applicable, a visual examinations, or other appropriate means.

The primary barrier must be sloped to drain liquids or other wastes to the collection system, and to ensure that liquids are not released into any portions of the unit that are not provided with secondary containment. This latter requirement for separation between "wet" and "dry" areas of a containment building is discussed below in greater detail.

In all cases, the primary barrier must be designed to withstand the movement of personnel, wastes, and handling equipment in the unit. (See § 264.1101(a)(4) and § 265.1101(a)(4).) By this, EPA means that coatings or membranes that might be exposed to abrasion or tearing by personnel, wastes, or equipment must be sufficiently durable to withstand that activity, be protected from it, or be scheduled for replacement on a regular basis as needed as part of the design of the unit. The primary barrier must be maintained to be free of cracks, gaps, corrosion, or other deterioration that could result in the significant release of hazardous waste.

Portions of containment buildings used to manage hazardous wastes containing free liquids must, in addition, be provided with secondary containment systems including (1) a secondary barrier and (2) a leak detection system. The secondary barrier must be designed and constructed of materials to prevent the migration of hazardous constituents into this barrier. The leak detection system, which lies below the primary barrier and above the secondary barrier, must be capable of detecting, collecting, and removing leaks of hazardous constituents through the primary barrier at the earliest practicable time. In keeping with the

design standards for liners and leak detection systems (57 FR 3462), this may be achieved by installation of a system that is, at a minimum: (1) Constructed with a bottom slope of 1 percent or more; and (2) constructed of a granular drainage material with a hydraulic conductivity of 1×10^{-2} cm/sec or more and a thickness of 12 inches (30.5 cm) or more, or constructed of synthetic or geonet drainage materials with a transmissivity of 3×10^{-5} m^2/sec or more. The secondary containment system must be constructed of materials that are chemically resistant to the waste managed in the containment building and of sufficient strength and thickness to prevent collapse under the pressure exerted by overlaying materials and by any equipment used in the containment building.

If only portions of a containment building are equipped with secondary containment, then "dry" areas (those without secondary containment) and "wet" areas (those areas with secondary containment) must be hydraulically separate. By this, EPA means that the containment building must be designed and operated so that liquids managed in "wet" areas are prevented from draining into "dry" areas by measures such as dikes, walls, trenches, differences in grade, etc. (See § 264.1101(b)(3)(i) and § 265.1101(b)(3)(i).) Wastes entering a "dry" area of the containment building, from a "wet" area of the unit must not contain more than de minimis amounts of free liquids (and a paint filter or equivalent test could be passed, if the physical form of the material would allow such a test to be performed).

In addition, today's rule clarifies that treatment of hazardous wastes within containment buildings may involve the addition of free liquids. As with any "wet" containment building areas, portions of containment buildings where wastes are treated with liquids must meet design standards that the Agency is promulgating today and that are equivalent to those applicable to tanks. These areas thus must be designed to prevent any release of liquids, wet materials, or liquid aerosols to other portions of the unit. In particular, treatment technologies involving liquids under high pressure such as high pressure washing must be restricted to dedicated cells or areas within the containment buildings designed and operated to prevent such releases. Barriers to such releases should be designed and constructed to be appropriate to the nature of the physical and chemical nature of the treatment to be performed, and should ensure proper control of wastes and moisture throughout the operating life of the unit. EPA notes that use of a number of treatment technologies including technologies specified elsewhere in today's rule may require barriers to movement of moisture into unit walls equivalent to those generally required to prevent migration of hazardous constituents into the primary barrier.

For example, soil washing may be conducted in a treatment area of the containment building. After treatment, the soil is allowed to drain. While significant quantities of free liquid remain, the soil must be managed in "wet" areas with secondary containment. When only de minimis quantities free liquids remain the materials may be managed in "dry" areas without secondary containment.

EPA recommends, but is not requiring, that owner/operators of containment buildings consider providing the entire unit with secondary containment in order to guard against contaminant releases and their associated costs in the event of operator error, equipment failure, or other unanticipated circumstance.

EPA believes containment buildings can serve as secondary containment systems for tanks placed within the building under certain conditions. A containment building can serve as an external liner system for a tank, provided it meets the requirements of § 264.193(d)(1), i.e. that it is designed and operated to contain 100 percent of the capacity of the largest tank within its boundary, designed and operated to prevent run-on or infiltration of precipitation into the secondary containment system, free of cracks or gaps, and designed and installed to surround the tank completely and to cover all surrounding areas likely to come into contact with the waste. In addition, the containment building must meet the requirements of § 264.193(b) and § 264.193(c)(1) and (2) to be considered an acceptable secondary containment system for a tank.

iii. Waiver from and Delay of Compliance with Secondary Containment. Under today's rule, the Regional Administrator has the discretion to waive the secondary containment requirement for containment buildings or areas of containment buildings where the only liquids to be used in the unit are liquids that will be used to control dust or to otherwise protect worker health and safety in accordance with OSHA requirements. Thus, in some cases, the Regional Administrator may determine on a case-by-case basis that secondary containment is not necessary where liquids are used in this fashion. For 90-day units where owner/operators wish to use liquids to control dust or otherwise protect worker health and safety and do not believe that secondary containment is necessary, the owner or operator must make a demonstration that the use of liquids in such a manner will not result in the release of contaminants and have a professional engineer certify to the fact.

EPA is also allowing the option of a delayed compliance date for the secondary containment requirement. Existing units converting to containment buildings and which are equipped with a primary barrier and a liquid collection system may be granted up to a two-year delay for compliance with the secondary containment requirement if these units substantially meet all other standards spelled out in today's rule. This may be the case for some existing buildings currently surpassing the design requirements applicable to indoor waste piles but not having secondary containment.

To avail themselves of this extension, owner/operators must provide a written request to the Regional Administrator by February 18, 1993. This request must include a description of the unit and its operating practices with special reference to the design and performance of any existing barrier layer(s), liquid collection and removal systems. Existing data and/or reports on materials, permeability, and drainage characteristics must be included, together with existing available quality assurance data on how the existing unit was constructed. It must describe specific plans including a schedule for retrofitting these units to meet the standards promulgated today.

The Regional Administrator will review this plan, and approve or provide comments. If owner/operators receive comments from the Regional Administrator, they will have 30 days to revise their submissions and respond to comments. The Regional Administrator will review the revised submission, and decide whether to grant up to a 2-year delay for secondary containment and may specify conditions for its approval. This decision will be based on whether the Regional Administrator has confidence that substantially meets the other standards in the rule, so that the unit will not release contaminants to the land prior to the required retrofit.

iv. Height of Waste in Unit. Another measure to ensure containment of hazardous waste managed in these units is today's requirement that the level of the waste inside the unit cannot exceed the height of the containment walls

intended to come in contact with the hazardous waste. (See § 264.1101(c)(1)(ii) and § 265.1101(c)(1)(ii).) EPA considers it a necessary good housekeeping practice to prevent stored/treated hazardous waste from spilling over the walls of the unit and, in the case of certain hazardous wastes, to be able to contain any potential "landsliding" of material out of the unit. It is important to note that the walls referred to in this provision are those containment walls, or parts thereof, designed and constructed to be in contact with the hazardous waste and to support its weight. The following example highlights this distinction.

Example: A facility has constructed a containment building to accumulate its hazardous waste prior to conducting treatment to meet LDR standards. The unit has a reinforced concrete floor and 10-foot high reinforced concrete walls. The remainder of the sidewalls, built atop the concrete wall and extending to the roof, are constructed of steel framing with fiberglass panels. In this example, the hazardous waste stored/treated inside the unit must not be piled any higher than the 10-foot reinforced concrete walls. The remainder or upper portion of the walls are not designed to support the weight of the waste and may not provide adequate containment of the waste in the event of an unexpected shift in the position of a portion of the waste, i.e., hazardous waste could escape through the panel joints.

A number of commenters to the proposed rule had concerns with the prohibition on piling wastes above the height of the walls intended to contain them, noting correctly that many wastes can be formed into conical piles extending substantially above the height of walls which may be supporting a portion of their weight. EPA's reason for including this requirement is to assure that there was no possibility of accidentally overtopping the containment walls. Accordingly, today's rule retains this requirement. EPA notes, however, that this requirement is intended to apply only to those walls that could come into contact with the waste and are intended to contain the waste. The examples below clarify EPA's intent.

Example: If waste is stored in a room within the containment building, where the interior walls, i.e., the walls of that room, are designed to support and/or contain hazardous wastes, those walls must meet the standards for containment walls. Exterior walls that could not come into contact with the waste would not have to meet those requirements in this case.

Example: If waste is stored in "stalls" within the containment building, where the walls that define the stalls are not designed and constructed to meet the requirements for containment walls, then the exterior walls must do so. Note, however, if the stalls are intended to separate wet and dry areas or to document that wastes are accumulated for less than 90 days, the stalls must be constructed to fulfill their function under normal operating conditions.

v. Standards for Doors and Other Openings. A related set of issues in the proposed rule refers to specifications for door and other wall openings used for equipment and personnel. EPA proposed that these doors and openings should be capable of providing the same level of structural support and containment as the rest of the wall, and invited public comment on specific standards for doors and openings that are part of a wall otherwise providing support and containment of hazardous waste managed within a containment building.

Today's rule departs somewhat from the proposed rule on these issues. In response to many public comments, EPA is clarifying that doors and other openings do not necessarily need to meet the same structural standards as walls. Depending on the nature of the wastes and the operations to be carried out in a particular unit, a relatively light-weight door may be adequate if: (1) It provides an effective barrier that controls fugitive dust emissions from the unit to meet the no visible emissions standard (see § 264.1101(c)(1)(iv) and § 265.1101(c)(1)(iv)), and (2) the unit is designed and operated in a fashion that assures that wastes will not actually come in contact with the door. This latter requirement could be satisfied, in many cases, by a set-back of wastes stored in the unit. As noted above, these requirements may be satisfied by either interior or exterior walls, subject to constraints posed by the way the waste is managed.

vi. Measures to Prevent Tracking. EPA believes routine handling of hazardous waste within many of these units demands the frequent, if not constant, presence of personnel and handling equipment, e.g., front-end loaders, cranes. As such, particularly when the hazardous waste includes small particulates or where handling of the hazardous waste generates dust, the potential for tracking hazardous waste out of the unit may be significant. Therefore, EPA is requiring that the owner/operator ensure the containment of hazardous waste within the unit with appropriate measures to prevent this. (See § 264.1101(c)(1)(iii) and § 265.1101(c)(1)(iii).) Wash-down of vehicles and equipment prior to exiting the unit and dedicating vehicles and equipment for the sole purpose of operating within the unit are examples of measures that owners/operators of these units could take when the potential exists for tracking of hazardous waste out of the unit. In addition, owner/operators must prevent tracking of water or wet materials from "wet" areas to "dry" areas.

vii. Control of Fugitive Dust Emissions. Because of the dusty nature of many of the hazardous wastes that may be managed in these units and the dusty conditions that can be caused by the handling of these wastes within the unit, EPA also is requiring that owner/operators control fugitive dust emissions during normal operating conditions. (See § 264.1101(c)(1)(iv) and § 265.1101(c)(1)(iv).) EPA has revised these requirements from the proposed rule based on extensive public comment. Today's rule provides substantial additional flexibility to owner/operators in how they may achieve the required degree of control. However, EPA is also specifying the standard more rigorously, and clarifying the presumption that owner/operators must install and operate systems to control fugitive dust emissions unless they can demonstrate that the wastes to be managed in the unit will not release significant amounts of fine particulates from the building as they are handled or treated.

The proposed rule required a system whereby a negative pressure was maintained within the unit and particulates collected, e.g., by fabric filter or electrostatic precipitator. In response to public comments, today's rule provides greater flexibility in controlling fugitive dust, but more specificity in the degree of control that must be attained.

The final rule requires that there be no visible emissions through any unit openings. This state of no visible emissions must be maintained effectively at all times during routine and operating and maintenance conditions, including when vehicles and personnel are entering and exiting the containment building. This standard is based on current standards required by EPA's Air Office. A test method found in 40 CFR part 60 appendix A, Method 22—Visual Determination of Fugitive Emissions from Material Sources and Smoke Emissions from Flares—can be used to determine compliance with the no visible emissions requirement. It is a timed method where an observer, using

a stopwatch, determines if for a given period of time a source has visible emissions. If used to meet these standards, negative pressure dust control systems should assure that the air flow through openings such as windows and doors is inward at all times. All dust control systems must be operated and maintained in accordance with sound air pollution control practices (these practices are described in more detail in 40 CFR part 60, subpart 292).

Techniques other than the maintenance of negative pressure may be utilized where they can be shown to maintain no visible emissions from openings in the unit. The owner or operator of a containment building is required to maintain control of fugitive dust emissions such that any unit openings (e.g., doors, windows, seams, vents, cracks, etc.) exhibit no visible emissions outside the containment building. Compliance with this requirement may include such measures as double door (airlock-type) entry designs. All units must have the certification of a professional engineer that any dust control system is designed to achieve the no visible emissions standard.

Notwithstanding any other requirements of subpart DD of parts 264 and 265, if the method of controlling fugitive dust emissions includes the application of liquids, the Regional Administrator has the discretion to waive the secondary containment requirement for containment buildings or areas of containment buildings where liquids will be used to control dust or to otherwise protect worker health and safety in accordance with OSHA requirements. (See § 264.1101(e) and § 265.1101(e).) EPA notes that the application of free liquids alone may not be sufficient to control fugitive dust emissions.

viii. Inspection Plan. To ensure the unit is operating as designed, EPA is requiring all owner/operators to have an inspection plan for all containment buildings that establishes an inspection program that ensures maintenance of the structural integrity of the unit and prompt detection of any leaks or releases to the air, ground, or water. EPA is requiring an inspection schedule for these units whereby, at least every seven days, monitoring/leak detection equipment, the containment building, and the area surrounding the containment building is checked to ensure the unit is being properly operated and that no leaks/releases have occurred to the air, ground, or water. (See § 264.1101(c)(4) and § 265.1101(c)(4).) This is consistent with the existing inspection requirements for drip pads and for liner and leak detection systems. These observations must be recorded in the facility's operating record. In the event that a condition is detected that has led or could lead to a release of hazardous waste, the owner or operator must repair the condition within a reasonably prompt time following discovery in accordance with the standard procedures for similar units. (See § 264.1101(c)(3) and § 265.1101(c)(3).)

In response to comments on these inspection requirements, EPA points out in today's rule that these weekly inspections need not be unduly burdensome. Electronic monitoring of liquid in secondary containment systems or of air pressure differentials between the inside and outside of a containment building are examples of relatively cost-effective monitoring techniques.

ix. Engineering Certification. In the proposed rule, EPA identified that it was considering but was not proposing a requirement for written certification by an independent registered professional engineer (e.g., one who is not an employee of the company, or of its parent or subsidiary.) The benefit of such a certification would be to ensure that any new or existing containment building is designed and constructed with sufficient structural integrity to safely manage and contain the hazardous waste. Public comment was divided on the appropriateness of requiring independent certification. EPA has decided not to require that this certification be made by an independent professional engineer. Since professional engineers are certified and licensed by States and thus have a substantial incentive to maintain their professional reputation, a professional engineer must certify that the containment building has been designed with sufficient structural integrity and is acceptable for storing and treating hazardous waste according to the standards specified by EPA. The assessment must show that the foundation, structural support, primary barrier, secondary containment system (where required), fugitive dust control system, and leak detection system are designed to meet today's standards and that the containment building has sufficient structural strength and compatibility with the waste to be stored or treated. (See § 264.1101(c)(2) and § 265.1101(c)(2).)

x. Temporary Containment Buildings. Finally, EPA is aware that in situations such as hazardous waste site remediation efforts, appropriately designed and operated containment buildings could serve to enhance the performance of bioremediation treatment technologies. It may not always be appropriate for containment buildings intended for temporary use to be constructed or operated in exactly the fashion outlined in today's rule. EPA plans to address temporary containment buildings in a future rulemaking.

d. *Closure Requirements.* Today's rule promulgates requirements for closure of containment buildings that are consistent with the closure requirements that apply to waste piles (§§ 264.258 and 265.258) and tanks (§§ 264.197 and 265.197). At closure, owners or operators of both permitted and 90-day containment buildings will be required to clean close the units by removing all hazardous waste from the containment building and by removing or decontaminating all hazardous waste residues, contaminated containment system components, contaminated subsoils, and structures and equipment contaminated with waste, and managing them in accordance with the Subtitle C regulations. If the unit containment building cannot be clean closed, the unit must satisfy the requirements for closure that apply to landfills under § 264.310 or 265.310. For a discussion of the requirements for clean closure and the "remove or decontaminate" standard, see 52 FR 8504, March 19, 1987.

Owner/operators of interim status waste piles who wish to convert these units to interim status containment buildings need not necessarily clean close their units prior to conversion; closure requirements applicable to these units may be deferred until closure of the containment building.

5. Revised Definition of Pile

EPA today is revising the regulatory definition of pile to exclude containment buildings. Specifically, EPA is revising the definition of "pile" to explicitly exclude containment buildings that accumulate or treat prohibited wastes under the proposed requirements of Parts 264 and 265. Although EPA has previously classified all roofed structures used to manage dry wastes as indoor waste piles, EPA believes that there are distinctions between indoor waste piles that constitute land placement and containment buildings.

Most commenters generally supported these changes as proposed, although a limited number of commenters suggested that EPA revise the definitions of "pile" and "tank" more extensively. EPA may refine those definitions further in separate action at

a later date, but EPA believes that the definitions in today's rule (which are substantially similar to those in the proposed rule) identify the distinctions between the various types of units with sufficient clarity to indicate which are land disposal and which aren't.

Under existing § 264.250, indoor waste piles are required to exclude liquids or material containing free liquids, be protected from surface water run-on, control dispersal of waste by means other than wetting, and not generate leachate through decomposition or other reactions. In contrast, the containment building design and operating standards provide a higher level of containment and are in many ways comparable to RCRA tanks—that is, the hazardous waste is contained during storage or treatment. For example, containment buildings must be fully enclosed, have weight-bearing walls and floor systems designed and constructed of materials to prevent migration of hazardous constituents, be equipped with a secondary containment system in areas where the hazardous waste contains significant quantities of free liquids, and be provided with fugitive dust emission controls. Whereas containment buildings are designed to manage moisture associated with non-liquid wastes, indoor waste piles are precluded from including any water whatsoever.

6. Amendment of § 268.50 Storage Prohibition and Permit Requirements

Under existing § 268.50, the storage of hazardous wastes prohibited from land disposal is also prohibited unless, among other requirements, the waste is stored in tanks or containers on site solely for the purpose of the accumulation of such quantities of hazardous waste as are necessary to facilitate recovery, treatment, or disposal. At the time EPA adopted this provision, tanks and containers were the only types of storage units that did not also involve land disposal. Under today's rule, there will also be other types of storage units (i.e., containment buildings, subpart X storage units) not involving land disposal. There may also be other types of miscellaneous storage units in the future, which units would be regulated under subpart X. EPA is thus promulgating this rule to conform § 268.50 to include these units.

7. Amendments to the Permit Modification Procedures in § 270.42

Today's rule also amends appendix I of § 270.42 by adding section M which will classify permit modifications involving containment buildings. In addition, today's rule amends the modifications for waste piles by adding an item which classifies a modification to a waste pile to meet the standards for a containment building as a Class 2 modification. EPA believes that many facilities will make modifications to their permitted waste piles to meet the standards for containment buildings. For more information on these permit modification procedures, see 53 FR 37912, September 28, 1988.

EPA is also amending section I of appendix I of § 270.42 to add item I.6, which allows permitted facilities to convert existing waste piles to containment buildings by submitting a Class 2 modification to the Agency. EPA believes that the public should have the opportunity to comment on the modification request, which the Class 2 procedures provide. However, EPA believes that this modification is not significant enough to warrant the Class 3 procedures because the unit is an existing unit, and the technical standards are more stringent for containment buildings than for waste piles.

Some of the hazardous debris treatment processes that were proposed as BDAT under § 268.45 would take place in units that EPA proposed to define as containment buildings. To assist in the development of treatment capacity by permitted facilities to meet the requirements of this rule, the Agency proposed to change the criteria that must be met to grant a temporary authorization. The existing regulation at § 270.42(e)(3)(ii)(B) allows approval of the request if the activity is necessary to treat or store restricted wastes in tanks or containers in accordance with part 268. Today's rule amends these criteria to include the treatment or storage of hazardous debris in containment buildings meeting the requirements in proposed subpart DD, parts 264 and 265.

8. Amendments to the Change During Interim Status Procedures in § 270.72

Section 270.72(b)(6) lifts the reconstruction limit for changes to treat or store in tanks and containers hazardous waste subject to land disposal restrictions imposed by part 268, provided that such changes are made solely for the purpose of complying with part 268. EPA believes that this change should also apply to treatment or storage of hazardous wastes in containment buildings. Today's rule amends § 270.72(b)(6) to make treatment or storage in containment buildings as regulated under subpart DD, parts 264 and 265, exempt from the reconstruction limit.

9. Amendment of § 268.7 Waste Analysis and Recordkeeping Requirements

Today's rule amends § 268.7 Waste Analysis and Recordkeeping requirements to include the management or treatment of prohibited waste in containment buildings.

10. Revision of § 260.10 Definition of Miscellaneous Unit

Today's rule also makes a conforming change to the § 260.10 definition of a miscellaneous unit by excluding containment buildings from that definition.

H. Retrofitting Surface Impoundments Under Land Disposal Restrictions

1. Regulatory Background

On February 4, 1992, EPA proposed a rule reconciling apparent conflicts in statutory language regarding surface impoundments receiving newly identified and listed prohibited hazardous wastes that have not been treated to meet a treatment standard (57 FR 4170). EPA is taking final action on that proposal in this FR Notice because the issue is relevant to wastes (particularly F037/F038) for which standards are being adopted today. (EPA also discussed this issue in the proposal to this rule at 57 FR 999–1000.)

a. *Issue.* EPA has identified a conflict in the Resource Conservation and Recovery Act (RCRA) concerning the deadline by which surface impoundments managing wastes that are both newly identified or listed as hazardous (i.e., identified or listed after the date of enactment of HSWA) and prohibited from land disposal must come into compliance with the minimum technological requirements (MTRs) of section 3004 (o)(1)(A) and 3005(j)(1). The MTRs require surface impoundments to have a double liner with a leak detection system, and a ground-water monitoring system.[1] In a typical situation, an impoundment will be receiving a hazardous, prohibited wastewater or generating a hazardous, prohibited sludge in the impoundment. These wastes typically will not meet treatment standards when placed in impoundments. The statutory conflict arises because one set of provisions states that impoundments can receive

[1] EPA has stated that land disposal facilities newly regulated under subtitle C of RCRA as a result of a newly identified or listed hazardous waste must install a ground-water monitoring system within one year of the effective date of the listing or characteristic rule (55 FR 39409, September 27, 1990). This deadline will not change as a result of this final rule.

untreated prohibited wastes only if they meet MTRs. Moreover, it is assumed that the lack of MTR impoundments creates a shortage of treatment capacity, justifying a variance. A further potential problem exists because normally only MTR impoundments are allowed to receive restricted wastes subject to capacity variances. On the other hand, a different statutory provision allows impoundments up to four years to achieve compliance with MTRs (or to close). The conflict arises if the LDR prohibitions come into play before this four-year period expires.

We now describe the relevant statutory provisions in more detail. Section 3005(j)(6) allows a four-year compliance period for meeting the surface impoundment MTRs after the promulgation of additional listings or characteristics of hazardous waste. At the end of the four-year period, the impoundment must either meet MTRs or cease receiving, treating, or storing hazardous waste (referred to as "closing" in this discussion). (Thus impoundments newly in the system are given the same four years to retrofit or close that existing impoundments receive. Section 3005(j)(1).) Congress thus acknowledged that retrofitting or closure is not a quick process, but rather one that requires time, thus tempering the need to protect the environment with an acknowledgement that there must be a reasonable period for changing operations.[2]

Section 3004(g)(4) requires EPA to prohibit newly identified or listed hazardous wastes from land disposal (i.e., promulgate treatment standards for all such wastes not disposed in no migration units) within six months of the date of the new listing or characteristic. Section 3004(h)(4), which also deals with land disposal restrictions, states that during a national capacity variance (which EPA issues if sufficient treatment capacity is unavailable nationwide) or case-by-case extension period (for individual facilities demonstrating that they are unable to find existing treatment but have a binding contractual commitment to provide treatment capacity), wastes not meeting the treatment standards may be placed in a surface impoundment only if the impoundment is in compliance with the MTRs.[3] *Mobil Oil Corp.* v. *EPA*, 871 F.2d 149 (D.C. Cir. 1989). Finally, section 3005(j)(11) states that only surface impoundments meeting MTRs, and that are dredged annually, may receive prohibited wastes that have not yet met a treatment standard.

As noted above, these provisions raise two sources of potential conflict. The first is how long non-MTR impoundments can continue to receive prohibited wastes (i.e., wastes not meeting a treatment standard and for which there is no capacity variance). Section 3005(j)(6) indicates four years while section 3005(j)(11) does not allow it. A second conflict occurs for impoundments managing wastes granted a national capacity variance or case-by-case extension when treatment standards are promulgated, because it is unclear whether surface impoundments must be in compliance with the MTRs at that time (per section 3004(h)(4)) or four years after the promulgation of the new listing or characteristic.

b. History. This conflict was not apparent when Congress enacted the Hazardous and Solid Waste Amendments of 1984 (HSWA) or when EPA first implemented the land disposal restrictions, even though the earliest land disposal restrictions dates (24 months from the enactment of HSWA for solvents and dioxins and 36 months for the California list wastes) would appear to cut short the November 8, 1988 retrofit deadline (four years after HSWA enactment) for interim status surface impoundments if they received wastes for which EPA granted a capacity variance. The issue did not arise because EPA interpreted section 3004(h) differently at that time; rather than requiring an individual unit receiving restricted waste to meet the MTRs, EPA required only those units within the same facility that were otherwise subject to the MTRs to be in compliance. As a practical matter, that meant that only new, replacement, or expansion units had to meet the MTRs.

In the August 17, 1988 rule promulgating the land disposal restrictions for the First Third Scheduled Wastes (53 FR 31138), EPA changed its interpretation to require individual units to comply with the MTRs. That reinterpretation became effective four years after the enactment of HSWA and was upheld in *Mobil Oil Corp.* v. *EPA*, 871 F.2d 149 (D.C. Cir. 1989). There was no conflict at that time because the four-year retrofitting period ended at the same time that the revised interpretation took effect.

The conflict was mentioned in the Third Third proposal (54 FR 48499, November 22, 1989), which stated that if EPA issues a capacity variance for newly identified or listed hazardous wastes, it would have to reconcile the differences in sections 3005(j)(6) and 3004(h)(4). (The notice did not allude to potential conflicts with section 3005(j)(11) because it was assumed that the lack of MTR impoundments would give rise to circumstances justifying capacity variances, triggering the potential conflict with section 3004(h)(4).) Several commenters responded to this issue. Some stated that section 3005(j)(6) explicitly afforded four years to retrofit surface impoundments newly brought under subtitle C regulation. Another commented that the four years provided to retrofit surface impoundments managing regulated mineral processing wastes may not be adequate, and that the schedule should be determined site-specifically.

Others disagreed, however, that a conflict exists between sections 3004(h)(4) and 3005(j)(6). They argued that: (1) EPA's interpretation of section 3004(h)(4), rather than any inherent flaw in the statute, led to the apparent "conflict," and (2) the general language of section 3004(h)(4) cannot override the specific language of section 3005(j)(6), wherein the issue of newly identified or listed hazardous waste is addressed directly. EPA did not resolve this issue in the final Third Third land disposal restrictions rule, but rather left it for later resolution. EPA is taking this opportunity to resolve the conflict.

2. Agency Interpretation

a. *How long can impoundments continue to be used to receive or generate newly identified or listed hazardous wastes?* The first set of provisions potentially in conflict are 3005(j)(6) and 3005(j)(11). As noted above, one provision allows four years to retrofit or close an impoundment, the other says that only MTR impoundments can receive prohibited wastes not meeting a treatment standard. Once EPA promulgates a treatment standard, the question is whether a non-MTR impoundment can receive prohibited wastewaters, and continue to generate prohibited sludges, i.e., whether these wastes can continue to be land disposed (section 3004(k)) within the non-MTR impoundment, assuming, as is almost

[2] Section 3005(j) is actually a series of deadlines connected with the retrofitting of surface impoundments. For those units that undoubtedly have to retrofit, the time period is four years, while those that may qualify for variances are subject to interim deadlines for application and action on the variance request, and then a period, if the variance is denied, to retrofit within the time remaining in the four-year period. There are also retrofit deadlines for units initially granted variances, but later found to be leaking. These units are given shorter periods (two or three years depending on the variance), but this is appropriate where there is an actual leak.

[3] RCRA sections 3004(h)(2) and 3004(h)(3) restrict the duration of national capacity variances and case-by-case extensions to a maximum of four years. If capacity becomes available sooner, it must be used.

certain, that the wastes do not meet the treatment standard when they are disposed in the impoundment.[4]

As noted below, the same question arises if one assumes that lack of existence of MTR impoundments triggers capacity variances, because § 268.5(h) (codifying section 3004(h) (4)) indicates that only MTR impoundments are eligible to receive the restricted wastes subject to the variance (assuming impoundments disposal).

EPA believes that this set of provisions is in conflict, since any other reading means that Congress gave a four-year window for continued non-MTR impoundment use with one hand, and snatched it away with the other by means of section 3005(j)(11).[5] The Agency is resolving this conflict by allowing interim status surface impoundments a four-year period (from the effective date of the waste identification or listing) to continue using the impoundment to receive prohibited wastewaters and generate prohibited sludges. This allows the period Congress appeared to deem typically necessary to close or retrofit an impoundment (see also section 3005(j)(1) where Congress provided the same four-year period for impoundments managing wastes identified or listed as hazardous on the date of enactment of the 1984 amendments).

Although Congress goal is not to put untreated wastes into non-MTR-compliant surface impoundments, it recognized that MTR compliance cannot be achieved immediately. Although the legislative history does not expressly articulate it, the structure of section 3005(j) shows that Congress thought that the goal of environmental protection (served by retrofitting) needed to be balanced against the goal of avoiding sudden disruptions and capacity losses in waste treatment and disposal that a six-month deadline could cause. Congress felt that four years struck an appropriate balance.

Although EPA recognizes that not all impoundments will take four years to close or retrofit (see 57 FR at 4173–74 (Feb. 4, 1992)), an interpretation that would allow EPA to review individual determinations of whether a full four-year period is needed to close or retrofit (for example, through review of applications for case-by-case capacity extensions) appears unduly disruptive of plant waste management determinations (i.e., EPA or State officials second-guessing determinations of the necessary length of time to close or retrofit), and wasteful of Agency resources as well. In addition, Congress indicated that a four-year window was appropriate. Thus, the Agency is interpreting these provisions to state that non-MTR impoundments can remain operating for four years after the effective date of the waste identification or listing notwithstanding that they are receiving prohibited waste not meeting a treatment standard.[6]

This same potential conflict is raised in duplicative fashion during the period of a national or case-by-case capacity variance. Not only is there the conflict with section 3005(j)(11) as discussed above, but a conflict with section 3004(h)(4) as well, since under that provision (as implemented in section 268.5(h)) only MTR impoundments can receive wastes during the period of a capacity variance. EPA is resolving this conflict by allowing a four-year retrofit period for the same reasons given above. Thus, the Agency reads section 3005(j)(6) as an exception to the general rule of section 3004(h)(4) (and 3005(j)(11)); that is, surface impoundments newly brought into the subtitle C system by a new listing or characteristic have four years to retrofit even if they receive wastes subject to a national capacity variance or case-by-case extension. However, EPA notes that the potential conflict between statutory provisions exists whether or not treatment capacity exists outside of the surface impoundment (see fn. 6).[7]

b. Resolution where treatment capacity exists outside the surface impoundment. If treatment capacity exists outside the surface impoundment, however, a further issue exists with respect to sludges generated within a surface impoundment, since these sludges can be removed for treatment elsewhere. In the January 9, 1992 proposed rule, the Agency proposed to resolve these issues by requiring annual dredging of F037 and F038 sludges, plus requiring clean closure of the unit (assuming the unit would be closed rather than retrofitted). The proposal was premised on the logic that if retrofitted impoundments receiving wastes not meeting a treatment standards had to be dredged annually (because of section 3005(j)(11)), unretrofitted impoundments should be subject to the same standard if there was a means of treating the waste being removed. The proposed clean closure requirement was based on the notion that if treatment capacity exists, it should be used in preference to disposal in a non-MTR impoundment. In the Feb. 4 proposal, EPA also noted a general principle of requiring use of treatment capacity for wastes in section 3005(j)(6) impoundments where such treatment capacity exists. (57 FR 4170.)

Commenters noted that aspects of the proposal did not necessarily make environmental sense. They noted that an annual dredging requirement was unlikely to provide significant environmental benefit because the impoundments were likely to be closed in a short time in any event, when some sludge removal was likely. Before closure, the impoundment would be monitored and subject to corrective action requirements. In addition, an annual dredging requirement could interfere with on-going use of the impoundment. With respect to clean

[4] The Agency adheres to its consistently held view that wastes generated in surface impoundments are land disposed within the meaning of section 3004(k). The Land Disposal Restrictions for Solvents and Dioxins final rule, which laid the foundation for future Land Disposal Restriction rules, stated that "residuals that exceed the treatment standards must be removed at least annually from the time the waste is first placed in the impoundment" (51 FR 40601, Nov. 7, 1986). Hence, it presupposed that sludges generated in surface impoundments would be regulated by the rule. This presupposition is also apparent at 53 FR 17581, Aug. 17, 1986, and 54 FR 26598, June 23, 1989. Certainly, generation of a sludge in an impoundment fits the definition of land disposal in section 3004(k): "any placement of such hazardous waste in a * * * surface impoundment * * *" In addition, since sludges are virtually never generated outside of impoundments and then put into them, any construction that sludges generated in impoundments are not also disposed in them would result in the overwhelming majority of impoundments managing hazardous wastes being outside the scope of the land disposal restrictions. This would undermine a principal Congressional purpose, since impoundments are singled out as the most environmentally adverse form of hazardous waste management unit. See, e.g., RCRA section 1002(b)(7); *CMA* v. *EPA*, 9 F.2d 158 (D.C. Cir. 1990). EPA has consistently taken into account the volumes of sludges generated in surface impoundments in the capacity determinations required for RCRA section 3004(h) (53 FR 17607, May 17, 1988; 53 FR 31191, Aug. 17, 1988; 54 FR 26636, June 23, 1989; 54 FR 48471, Nov. 22, 1989; and 55 FR 22632, June 1, 1990).

[5] The Agency does not believe it fruitful to argue about which provision is more specific. One is more specific with regard to dealing with newly listed waste, but the other is more specific in addressing the relationship of impoundments and the land disposal restriction provisions.

[6] As noted above, another way of viewing this question is to say that the conditions for some form of treatment capacity variance are satisfied because even if treatment capacity exists outside the surface impoundment, wastes must continue to be land disposed in the impoundment for some period of time while the impoundment is closed or retrofitted. EPA would give the same answer (i.e., four years of continued use) if the question were conceptualized in terms of capacity variances.

[7] Of course, prohibited sludges generated outside of impoundments could not be managed in a non-MTR impoundment in any case. If treatment capacity is available for such sludges, it must be utilized. If treatment capacity is unavailable (i.e., there is a capacity variance in place for such wastes), the wastes must be disposed in an MTR landfill, or impoundment, or some other type of land disposal units such as land treatment (§ 268.5(h)).

closure, commenters pointed out (correctly) that this would entail removal not only of accumulated sludges but subsurface contaminated soils as well which are not the focus of the treatment requirements, and that forcing clean closure could interfere with otherwise available and potentially more cost-effective types of closure options.

EPA finds many of these comments persuasive and believes that the following interpretation best resolves these issues. First, EPA is not interpreting these provisions as necessitating annual dredging of accumulated sludges. Either the impoundment will close in a short time (no more than four years), or it will be retrofitted and become subject to the annual dredging requirement in section 3005(j)(11) (as implemented by § 268.4(a)(2)(ii)). If the impoundment closes, EPA is interpreting the provisions to allow closure with wastes in place (unless the unit operator chooses to clean close the impoundment). Thus, under this reading, continued use of the impoundment would be allowed during the four-year retrofit/closure period (as explained in section 1 above), use of the impoundment during that time would not be disrupted by a dredging requirement, and the impoundment would be allowed to close with wastes in place. These are the same options that were available to impoundments in 1984 managing wastes already identified or listed as hazardous.

3. Technical Analysis

a. *Introduction.* Owners or operators of surface impoundments managing newly listed or characteristic hazardous wastes have several options for complying with the minimum technological requirements. Facilities may retrofit the surface impoundments with liners and leak detection systems in compliance with the requirements of section 3004(o)(1)(A)(i). Alternatively, facilities may replace their treatment surface impoundments with wastewater treatment tanks regulated under the Clean Water Act or may opt to close the surface impoundments and send the waste off-site.

EPA believes that very few facilities managing newly regulated wastes in surface impoundments will choose to retrofit their impoundments. For example, the Chemical Manufacturers Association (CMA) conducted an informal survey of 582 chemical manufacturing facilities in the fall of 1989 to obtain information about the management of "non-hazardous wastes" in surface impoundments. Twenty-seven facilities reported that 85 surface impoundments would be newly regulated as a result of the Toxicity Characteristic rule (55 FR 11798, March 29, 1990); of these 85, only 9 would be retrofitted with liners and leak detection systems. Replacing surface impoundments with tank systems was the most frequently planned method of compliance for the respondents to this survey. Past experience also indicates that surface impoundment owners or operators are more likely to replace their surface impoundments with tank systems than to retrofit the impoundments. RCRA section 3005(j)(1) required surface impoundments that were in existence and that qualified for interim status on the date of enactment of HSWA to come into compliance with the MTRs by November 8, 1988. Most facilities with surface impoundments replaced their impoundments with tanks in response to this deadline. Less than five percent of these facilities actually retrofitted their surface impoundments.

To support today's rulemaking, EPA undertook an analysis to determine how much time is needed for owners or operators of newly regulated surface impoundments to comply with the MTRs either by replacing the impoundments with wastewater treatment tanks exempt from RCRA subtitle C standards, or by retrofitting the surface impoundments with liners and leak detection systems according to the requirements of section 3004(o)(1)(A)(i). EPA collected information from a variety of sources, including facilities that have implemented these practices in the past or plan to do so in the future (e.g., in response to the TC), tank manufacturers, and engineers. The results were summarized in the proposed rule (57 FR 4170), and are available in the background document.[8]

4. Conclusion

EPA found that the time needed to comply with the MTRs varies considerably based on case-by-case factors (e.g., current waste management practices, land availability) and regional factors (e.g., climate). According to EPA's information sources, six months appears not to be enough time to either retrofit a surface impoundment or replace the impoundment with a wastewater treatment tank. Replacing a surface impoundment with a tank frequently takes two to four years, and retrofitting a surface impoundment frequently takes two to three years.

EPA believes that most interim status surface impoundments managing wastes newly identified or listed as hazardous will be able to comply with the surface impoundment MTRs within four years of the date promulgating the listing or characteristic. Thus, the four-year period allowed in section 3005(j)(6) is a reasonable period within which to come into compliance.

V. Detailed Discussion of Final Rule: Hazardous Debris

A. Overview

The Agency is today promulgating a final rule for the treatment of hazardous debris. Until today, debris destined for land disposal that was contaminated with a prohibited RCRA hazardous waste or that exhibited a prohibited RCRA hazardous characteristic was subject to the treatment standard for that listed waste or characteristic. See, e.g., 55 FR 22649 and RCRA sections 3004 (d)(3) and (e)(3). Although hazardous waste debris (as well as contaminated media) is subject to the LDR prohibitions, there is no requirement that it have the same treatment standards as the wastes with which it is contaminated. Indeed, because hazardous debris may be a matrix significantly different from the underlying prohibited waste, it is appropriate as a technical matter to determine whether different treatment standards were appropriate.

Today, EPA is promulgating treatment standards for hazardous debris prohibited from land disposal. Under today's rule, hazardous debris must be treated by specified technologies based on the type of debris and type of contaminant(s) present or, as an alternative, meet the LDRs for the specified prohibited listed or characteristic waste with which it is contaminated.

EPA has specified a number of BDAT technologies for hazardous debris, with the choice of technology left up to the generator and/or treater managing the waste. The technologies include widely used treatment methods. EPA thus believes that it is preserving in this rule as much flexibility for the treatment of hazardous debris as possible.

[8] It should be noted that the potential statutory conflict at issue in this rulemaking is most immediately relevant to wastes newly regulated as a result of the Toxicity Characteristic (TC) rule (55 FR 11798, March 29, 1990). According to the regulatory impact analysis for the TC, about 730,000,000 metric tons per year of wastewaters managed in surface impoundments at over 2,000 facilities are estimated to exhibit the TC (U.S. EPA, OSW. U.S. EPA Background Document. Toxicity Characteristic Regulatory Impact Analysis. Final Report. March 1990). This potential conflict will also arise with respect to all future newly identified or listed hazardous wastes; however, the TC rule is used as an example throughout this section.

Prohibited hazardous debris is defined generally as solid material (that is not a process waste) having a particle size of 60 mm or larger and that is intended for land disposal and exhibits a prohibited characteristic of hazardous waste or that is contaminated with a prohibited listed hazardous waste. Hazardous debris must be treated by one of the specified treatment technologies for each "contaminant subject to treatment" defined as: (1) The BDAT constituents for the listed waste that are subject to land disposal restriction standards (as found in § 268.41 and 268.43); and (2) the RCRA hazardous waste constituent(s) for which the hazardous debris fails the Extraction Procedure toxicity characteristic, in addition to any other characteristic which causes the debris to be hazardous (i.e., ignitability, reactivity). As an alternative, the generator of the hazardous debris may choose to treat the hazardous debris to the existing waste-specific treatment standards for the waste contaminating the debris. However, in choosing this alternative, the generator or treater would be required to sample and analyze the treated debris to ensure compliance with the treatment standards prior to disposal in a Subtitle C land disposal unit.

To ensure effective treatment, the treatment unit would be required to meet performance standards or design and operating conditions specified in the rule. In addition, the treatment unit would generally be subject to the Part 264 and 265 standards for treatment facilities to ensure protection of human health and the environment.

The rule addresses not only the issue of when hazardous debris is sufficiently treated, but the further question of when it is a hazardous waste. Under the rule, treated hazardous debris would be excluded from the definition of hazardous waste provided that: (1) The debris is treated to the performance or design and operating standards by an extraction or destruction technology rather than an immobilization technology [9]; and (2) the treated debris does not exhibit a characteristic of hazardous waste. If an immobilization technology is used, the treated debris would not be automatically deemed a nonhazardous waste. In addition, the Agency could determine on a case-by-case basis under today's rule that debris no longer "contains" hazardous waste and is excluded from Subtitle 6 regulation.

Residuals generated by the treatment of hazardous debris are subject to the numerical treatment standards for the waste contaminating the debris.

B. Definitions of Debris and Hazardous Debris

1. Definition of Debris

EPA is today defining debris as solid material exceeding 60 mm (2.5 inch) particle size that is: (1) A manufactured object; or (2) plant or animal matter; or (3) natural geologic material (e.g., cobbles and boulders), except that any material for which a specific treatment standard is provided in Subpart D, part 268, is not debris.[10] A mixture of debris and other material such as soil or sludge is also subject to regulation as debris if the mixture is comprised primarily of debris by volume, based on visual inspection. Process residuals such as smelter slag and residues from the treatment of waste (e.g., incinerator ash), wastewater, sludges, or air emissions residues (e.g., collected particulate matter) are not debris. We discuss below that debris must be intended for discard (i.e., rather than continued use), that debris must be a solid material, the rationale for selecting a 60 mm particle size criterion for debris (i.e., as opposed to the 9.5 mm particle size proposed) and for applying the size criterion to all debris (i.e., not just to geologic materials as proposed), the rationale for regulating as debris mixtures of primarily debris and other materials, the rationale for not regulating process residuals as debris, and the rationale for regulating nonempty containers as hazardous waste subject to existing LDRs rather than as debris.

a. *Debris Must Be Discarded or Intended for Discard.* Debris must of course be either a solid waste or media (e.g., boulders) that is discarded or intended for discard to be subject to the treatment standards in today's rule. Those commenters on the proposed rule expressing concern that the proposed rule in some way vitiated (or was intended to vitiate) this basic principle were mistaken. This means that such materials that might at some later time become debris, such as equipment or building structures, but that are still in use are not subject to the treatment standards. Such in-use material is not a solid waste because it has not been discarded or intended for discard, as these terms are used in § 261.33 (i.e., likely abandoned, as defined in § 261.2 (a)(2)(i) and (b))

Media debris (e.g., boulders) is also not subject to regulation as solid waste unless discarded or intended for discard and so is not automatically subject to the treatment standards.

Once debris becomes a solid waste by virtue of being discarded (including media debris that becomes subject to regulation as solid waste by virtue of being discarded), it is not necessarily subject to the treatment standards. For example, contaminated debris that is not actively managed after the effective date of the prohibitions (i.e., the effective date of the LDRs for the hazardous waste contaminating the debris) would not be subject to the standards. See 53 FR 31148 (Aug. 17, 1988). On the other hand, debris which is contaminated with hazardous waste disposed before the hazardous waste listing effective date and which is actively managed is subject to the prohibitions and so would have to be treated to satisfy the treatment standards promulgated today before the debris could be land disposed (assuming disposal will not occur in a no-migration unit). *Chemical Waste Management* v. *EPA*, 869 F. 2d 1526 (D.C. Cir. 1989).

b. *Debris Must Be a Solid Material.* The rule defines debris as a "solid material." This means solid in a literal sense as defined in a common dictionary. A solid material is a material that retains its volume at room temperature without the need for support by a container. Examples of solid materials that are debris if intended for discard and if their particle size is 60 mm (2.5 inches) or greater include: (1) Glass; (2) concrete (excluding cementitious or pozzolanic stabilized hazardous wastes); (3) masonry and refractory bricks; (4) nonintact containers [11] e.g., crushed drums); (5) tanks; (6) pipes, valves, appliances, or industrial equipment; (7) scrap metal (as defined in 40 CFR 261.1(c)(6)); (8) animal carcasses; (9) tree stumps and other plant matter; (10) rock (e.g., cobbles and boulders); and (11) paper, plastic, and rubber. Not only is defining debris as solid material in accord with the common-sense view of what debris is, but, more importantly, it is geared to the treatment standards adopted today that ensure effective decontamination of solid materials by removal or destruction of hazardous waste. Clearly, if a liquid could be

[9] In the Phase II land disposal restrictions rule, the Agency will reopen and request comment on the issue of whether immobilized debris should be excluded from Subtitle C regulation. (See discussion in Section V.D.2.)

[10] For example, lead acid or cadmium batteries are not debris because they are subject to specific treatment standards under § 268.42.

[11] See discussion in section V.B.1.f of the text regarding regulation of intact and nonintact containers.

considered debris, the concept of cleaning off the outer surface to remove contamination does not make sense.[12]

Even though debris must be a solid material, it may contain or be mixed with free liquids.[13] The liquids may be waste or ground or surface water that may be entrapped in the debris (e.g., in partially crushed containers (see discussion below on regulation of containers)) or may be still oozing from the debris if the debris was newly generated or newly excavated from a remediation site. (If liquids separate from hazardous debris prior to treatment of the debris, they must be managed as hazardous waste.) Liquids that are entrapped in debris will be effectively treated under today's treatment standards for extraction or destruction technologies. If an extraction technology is used, the toxic constituents in the liquid will be removed from the debris as a treatment residue and is subject to the LDRs for the waste contaminating the debris. If a destruction technology is used, the toxic constituents in the liquid should be destroyed.

We note, however, that debris that is immobilized prior to land filling may not contain free liquids as provided by §§ 264.314 and 265.314. Thus, free liquids (including liquids in crushed containers) cannot be present in debris that is macroencapsulated or sealed, and cannot be present in debris that has been micorencapsulated.

c. *Debris Has a Particle Size Larger Than 60 mm.* Today's rule defines debris as solid material with a particle size of 60 mm (2.5 inches) or greater. We discuss below the rationale for increasing the particle size to 60 mm from the proposed 9.5 mm particle size, the rationale for applying the size criterion to all debris, not just to geologic matter as proposed, the rationale for defining 60 mm or larger clumps of fine-grained materials (e.g., clumps of compacted clay) as nondebris material, and how the particle size criterion is to be implemented.

(1) Rationale for Increasing the Particle Size of Debris From 9.5 mm to 60 mm. The Agency is today defining debris as solid material with a particle size of 60 mm (2.5 inches) or greater for a number of reasons: (a) Fine grain materials (e.g., soil, glass cullet) are not amenable to the surface removal technologies specified in today's rule and are not commonly thought of as debris; (b) fine grain materials are likely to be amenable to the treatment technologies that were the basis for the LDRs for the waste contaminating the material; (c) fine grain materials, unlike large particle size materials, can be reasonably sampled for analysis to document compliance with the concentration-based LDRs for the waste contaminating the material; (d) material normally considered to be soil should be subject to the Agency's planned LDRs for contaminated soil rather than defined as debris [14]; (e) the selection of a 60 mm particle size criterion is within the range of reasonable particle sizes the Agency could have selected for defining debris; and (f) many commenters suggested a larger particle size, and the only commenters that suggested a particular size suggested 60 mm.

We note that a number of commenters suggested that the Agency consider raising the particle size breakpoint as the Agency is doing here. Two commenters suggested an alternative sieve size of 60 mm, stating that existing soil-washing equipment such as rotary screens and wet vibratory screens are capable of handling particles sizes of several inches, and the suggested 60 mm cut-off size would result in more soil being subject to the existing LDRs which require sampling and analysis to document compliance with concentration-based treatment standards.

While the Agency believes that it could have selected other particle sizes, the Agency selected the 60 mm (2.5 inch) particle size from the range of 9.5 mm (⅜ inch) to 200 mm (8 inches) because: (1) It is a commonly used sieve size that is commercially available, (2) it would define as soil pebbles and smaller particles, and define as debris cobbles and boulders [15] in accord both with common understanding and with materials most amenable to effective treatment by the methods adopted today; and (3) it meets the criteria discussed above (e.g., smaller particle size material can be readily sampled to document compliance with the numerical LDR treatment standards for the waste contaminating the material).[16] In addition, this size object is normally readily amenable to effective treatment by the methods specified in today's rule.

(2) Rationale for Applying the Particle Size Criterion to All Debris. The Agency has broadened the particle size test to apply to all debris, not just to geologic debris as proposed. We believe that the reasons enumerated above for increasing the particle size to 60 mm apply equally to applying the particle size to all debris (e.g., small particle size objects—e.g., glass, metal fragments—can be readily sampled representatively to document compliance with the LDRs for the waste contaminating the material).

(3) Compacted Clumps of Fine Grained Materials are not Defined as Debris. The Agency is basing the size criterion on the particle size of the solid material rather than the sieve size to ensure that 60 mm (or larger) compacted clumps of materials with a particle size less than 60 mm are not defined as debris. The most common example is clayey soil. Clay particles are extremely cohesive and can form clumps during normal excavation and handling operations. The contaminated debris treatment methods are not intended to clean clumps of clay. Clumps of agglomerated clay soil are subject to the treatment standards for the waste contaminating the soil.

In addition, the Agency is concerned that generators may have the incentive to intentionally agglomerate small particle size materials (e.g., soil or even manufactured materials) so that they would meet the definition of debris and so be excluded from regulation under subtitle C upon treatment by an extraction or destruction technology. If such contaminated materials were not

[12] While most of the debris treatment methods are extraction methods, some methods destroy the hazardous constituents; although these would be applicable to liquid material, most of the treatment methods simply remove the contamination from the debris for subsequent detoxification treatment.

[13] To determine otherwise would result in large quantities of solid materials being subject to the existing LDRs for the waste contaminating the materials. Those solid materials would be very difficult to sample representatively to document compliance with the LDRs. Further, the solid materials would be readily amenable to the debris treatment standards promulgated today notwithstanding the presence of free liquids, and hence appropriately classified as debris.

[14] We note that numerous commenters were concerned that the proposed particle size criterion of 9.5 mm would inappropriately define most soil as debris. (We note further that the proposed rule could have been interpreted to define as debris geologic material that was comprised of only one particle (e.g., a rock) with a particle size of 9.5 mm or greater. Thus, fine grain soil containing one 9.5 mm or greater sized rock could have been considered debris. The final rule addresses mixtures by defining as debris mixtures of primarily debris with other materials. See discussion in the text in Section V.B.1.d).

[15] See the May 11, 1992, memorandum from Kerry Rice, Radian to Mark Mercer, EPA, entitled "Particle Size Definitions and Sieve Sizes"; and the May 18, 1992, memorandum from Peter Shields, Radian, to Mark Mercer, EPA, entitled "Sieves with Openings Greater than Four Inches".

[16] We note that the Agency is considering proposing Phase II land disposal restrictions that would establish treatment standards for contaminated soil. In that proposal, the Agency is considering requesting comment in particular on whether soils with a particle size between 9.5 mm and 60 mm can be effectively treated under those proposed standards.

regulated as debris, they would be subject to the LDRs for the waste contaminating them and would remain subject to subtitle C regulation after treatment. Basing the size criterion on particle size rather than sieve size precludes the potential for such sham activities.

(4) Implementation of the Particle Size Criterion. To make today's rule workable, equipment operators need to be able to determine quickly whether material being remediated is debris or nondebris (e.g., soil, waste). In some cases, the determination will vary from one front end loader bucketfull of material to another. Accordingly, the Agency intends for the size criterion to be implemented by visual observation. Screening is not required. If screening is used, however, the screen may be either a square grid with openings 60 mm on a side or a circular grid with circles with a 60 mm diameter.

(d) Waste for Which a Specific Treatment Standard Has Been Established is not Debris. There is one further exception to this definition of debris. EPA is indicating that debris-like material for which the Agency has promulgated a specific treatment standard is not considered to be debris. The reason is that the Agency will have determined that specific treatment standards are appropriate for the material, rather than the assortment of technologies adopted for debris generally. See 57 FR 983 c.3 (Jan. 9, 1992).

The chief examples of a material subject to a specific treatment standard rather than the general debris standards are lead acid batteries and cadmium batteries. EPA has promulgated a treatment standard of metal recovery for each of these materials. See § 268.42. Thus, this more specific treatment standard takes precedence over the more general debris standard adopted today.[17]

d. Mixtures of Debris with Other Materials are Subject to Regulation as Debris if Debris is the Primary Material Present. A further issue needing to be addressed is the status of mixtures of debris and other materials such as soils or sludge. This situation arises often, particularly in remedial situations where debris is rarely present in a pristine state. Since the treatment standards for debris and other materials—sludge or contaminated soil—differ, the issue of classification is an important one. In developing a means of classification, the Agency on the one hand is seeking to prevent the debris classification from invariably overriding the treatment standards for other hazardous wastes. On the other hand, it is important to have a means of classification that is easy to apply by equipment operators in the field.

The Agency has therefore decided to classify [18] as debris any mixture where the debris portion comprises the largest amount of material present by volume, to be determined by visual inspection.[19] Thus, for example, if upon examination, a mixture of cobbles (i.e., with a particle size of 60 mm or more), soil, and sludge is comprised mostly of cobbles, the mixture is classified as debris. After being treated by one of the treatment methods for debris promulgated in today's rule, it could then be land disposed. (Residues from applying the treatment method could be land disposed after being treated to meet the treatment standards for the prohibited waste contaminating the debris.)

The definition of debris encompasses this classification principle by stating that "A mixture of debris and other material such as soil or sludge is also debris if the mixture is comprised primarily of debris by volume, based on visual inspection." It should be clear from this discussion that the rule does not require debris and nondebris materials to be separated prior to treatment (an unintended implication of the proposed rule). Rather, mixtures are either classified as debris or some other type of waste treatability group according to the classification test discussed above.

We note that the "primary material" test for classifying debris does not apply to intact, nonempty containers. Given that such containers are not debris (see discussion below in section V.B.1.f) and can be readily separated from debris (or mixtures of debris and other materials), they are not considered in applying the "primary material" test. Consequently, intact, nonempty containers must not be included in making the volume determinations to classify mixtures of debris.

There is one further point to be made. Although EPA is classifying mixtures that are predominantly debris as debris, this does not mean that debris can be deliberately mixed with other wastes in order to change their treatment classification. Such mixing is impermissible dilution under § 268.3 since it is a substitute for adequate treatment. See also 53 FR 31145 (Aug. 17, 1988); dilution to change treatability groups is ordinarily impermissible. In addition, such situations where debris is used merely to dilute another prohibited waste, the mixture would remain subject to the most stringent treatment standard of any waste that is part of the mixture. See § 268.41(b).

e. *Process Residuals Are Not Debris.* Today's definition of debris explicitly excludes process residuals by stating: "Process residuals such as smelter slag and residues from the treatment of waste (e.g., incinerator ash), wastewater, sludges, or air emissions residues (e.g., collected particulate matter) are not debris." The Agency believes that debris should be limited to manufactured objects (e.g., metal, glass) and naturally occurring objects (e.g., boulders, tree stumps). The Agency developed the treatment standards generally to ensure effective treatment of hazardous waste contaminating an object, rather than effective treatment of a large particle size hazardous waste such as slag.[20]

Several commenters requested clarification as to what the Agency meant in the proposed rule by excluding from the definition of debris "solids that are listed wastes or can be identified as being residues from treatment of wastes and/or wastewaters." The commenters felt that it was unclear whether this phrase exempts from the definition of debris only pollution control residues, or material such as metal filters, ceramic column packing, or discarded pollution control equipment. Commenters suggested that EPA clarify, through examples, that discarded industrial equipment (such as filters, pumps, etc.) would be included in the definition of

[17] A number of commenters questioned the jurisdictional basis for regulating battery plates and groups from lead acid batteries as "solid wastes" subject to subtitle C regulation. EPA adheres to the response set out at 57 FR 960–961 in the proposed rule.

[18] We note that although such mixtures are classified as debris and are subject to the debris treatment standards, if the nondebris materials are separated from the debris prior to treatment by a specified technology, the separated material is no longer classified as debris. If the separated material is a hazardous waste (or soil contaminated with a hazardous waste), it is subject to the waste-specific treatment standards. When treatment residue (i.e., soil, waste, or other nondebris material) is separated from treated debris as required by today's debris standards for extraction or destruction technologies, the residue is subject to the waste-specific standards for the waste contaminating the debris.

[19] Some materials (e.g., soil) mixed with debris may contain free liquids that may still be oozing from the material. The volume of such entrapped liquids need not be considered in determining whether the mixture is primarily debris because it is impracticable to determine the volume of such liquids by visual inspection.

[20] We note that previous debris definitions (see § 268.2(g)) considered "slag" as debris. The Agency has reconsidered this issue and has determined the slag is not debris because it is not the type of material for which today's debris treatment standards were developed—objects contaminated (generally surficially) with hazardous waste.

debris even if the equipment was used to treat wastes or wastewaters. The commenters are correct. A discarded pump or filter used to treat a waste is debris, but the waste pumped or filtered is not debris. Although some filtered or pumped waste will contaminate the pump or filter (indeed, that is the basis for subjecting the filter or pump to the treatment standards), the contaminated pump or filter will virtually always be comprised primarily of debris rather than waste and so would be classified as debris.

f. *Intact Containers Are Not Debris.* A number of commenters requested comment on the relationship between the proposed treatment standards for debris and the so-called empty container rule in § 261.7. That rule states in essence that with respect to containers holding hazardous waste, what is regulated is the hazardous waste in the container and not the container itself. Thus, empty containers are not regulated, and the hazardous wastes in nonempty containers are. An empty container is one from which all hazardous wastes have been removed using practices commonly utilized for waste removal, and in which not more than 2.5 centimeters of waste remains. (Slightly different tests apply to containers holding acutely hazardous wastes.)

Since containers are potentially a form of debris, there is a question whether either empty or nonempty containers are subject to the treatment standards for debris notwithstanding § 261.7. EPA is indicating in this rule that the debris treatment standards do not override the empty container rule, so that rule remains in effect. EPA is taking this step largely because it did not propose the issue for comment, and any fundamental changes to the empty container rule merit fuller public participation than afforded here. In addition, EPA has not fully studied the implications of making changes in the empty container rule to accommodate regulations under the land disposal prohibitions program.

Today's final rule thus indicates that intact containers are never considered to be debris, and thus would never be subject to treatment standards for debris. Intact containers are either empty or nonempty. If empty they are not subject to regulation, as provided by § 261.7(a)(1). If nonempty, the hazardous waste within the container is subject to the land disposal prohibitions (as well as the rest of subtitle C regulations). EPA also does not consider intact tanks to be debris, so that any hazardous wastes in tanks would be subject to the standards for those wastes, not (potentially) to treatment standards for debris.

It should be noted, however, that EPA is reading the empty container rule in § 261.7 to apply to intact containers. The Agency is doing so because the rule was clearly intended for devices that function as containers, not for crumpled drums that are not easily emptied by normal means. See § 261.7(b)(1)(i). Nonfunctional containers are more naturally classifiable as debris and the treatment standards adopted today are appropriate for such damaged containers being disposed.

By "intact container", the Agency means a container that can still function as a container. The Agency believes that a container that is unbroken and still retains at least 75% of its original holding capacity (i.e., has not been crushed more than 25%) is still intact. The Agency selected the 75% criterion because: (1) It is within a reasonable range of 50% to 90%; (2) selecting an original volume criterion on the high end of the range (e.g., 90%) would result in containers containing large quantities of waste being considered debris even though the containers could be readily separated from debris; and (3) selecting an original volume criterion on the low end of the range (e.g., 50%) would subject the waste in containers that have been severely crushed to the treatment standards for the waste. This would require removal of the waste from the container for treatment which may be impracticable for severely crushed containers.

Finally, it should be noted that by observing the empty container rule, EPA is creating a limited exception to the nonsegregation principle discussed above. In situations where intact containers are mixed with true debris (i.e., materials classified as debris under today's rule), the intact containers thus would have to be removed and managed separately.

The following example indicates how these principles would apply. At a remediation site, ruptured drums are discovered still containing some prohibited hazardous waste. Mixed in with these drums are other drums some of which are not significantly damaged or crumpled and all still contain prohibited hazardous wastes. All of these drums are going to be disposed of off site.

Under today's rule, the ruptured drums are debris (broken or ruptured containers are always debris if contaminated with prohibited waste) and cannot be land disposed until they are treated by one of the debris treatment methods. If hazardous waste is removed from the drum during treatment, the waste, like all treatment residues, is subject to the treatment standards for the prohibited waste. With respect to the unruptured drums, those that are intact (i.e., those that retain at least 75% of their original volume) are nonempty containers under § 261.7. The waste in these drums is subject to the treatment standards for the prohibited waste. Those that are not intact (i.e., those that retain less than 75% of their original volume) are debris.

2. Definition of Hazardous Debris

a. *Which Debris is Hazardous, and of this Debris, Which is Prohibited?* This rule applies only to debris that is subject to subtitle C regulation when it is generated. As EPA proposed, this means: (1) Debris that contains listed hazardous wastes (either on the debris surface, or in its interstices, such as pore structure); or (2) debris that exhibits a characteristic of hazardous. See 57 FR 983. To be prohibited, and hence subject to the treatment standards adopted today, the debris would have to be contaminated with listed wastes that are also prohibited, or exhibit a prohibited characteristic. Thus, only debris that is contaminated with a listed waste for which EPA has established a treatment standard, and debris exhibiting the characteristics of ignitability, corrosivity, reactivity, or EP toxicity (plus exhibiting the TC characteristic, since the debris must still be a hazardous waste) are subject to the treatment standards adopted today. (Most of these debris wastes, of course, are already prohibited by virtue of previous rulemakings; only debris contaminated exclusively with the newly listed wastes for which EPA is adopting treatment standards today would be newly prohibited under today's rule.)

b. *Codification of Contained in Principle for Debris.* In adopting the definition that debris containing listed hazardous waste is regulated under subtitle C, EPA is codifying the "contained in" principle, which has heretofore served as an interpretive gloss on the existing mixture and derived from rules. See 57 FR 983, *CMA v. EPA*, 869 F. 2d 1526 (D.C. Cir. 1989). As explained at proposal, *id.* at 986, the contained in concept will apply to both media and nonmedia debris (an approach with unanimous support in the public comments).

Furthermore, EPA is also codifying the corollary part of the contained in principle: That debris which no longer "contains" listed hazardous waste

would no longer be subject to subtitle C regulation, provided that it does not exhibit any hazardous waste characteristic. This involves a case-by-case determination by EPA, made upon request, that debris does not contain hazardous waste at significant levels, taking into consideration such factors as site hydrogeology and potential exposure pathways, but excluding management practices.[21] Debris found not to contain hazardous waste (and not exhibiting a hazardous waste characteristic) would not be subject to further subtitle C regulation, and so could be land disposed without further treatment. In addition, these levels could be achieved by any form of treatment other than impermissible dilution, and thus need not result from application of the debris treatment methods adopted today. *Id.* at 983–84.

3. Relation of Today's Rule to the Hazardous Waste Identification Rule

On May 20, 1992, EPA proposed comprehensive revisions to the regulatory definition of hazardous waste, asking for comment on a series of options for redefining what a hazardous waste is. See 57 FR 21450. These rules could affect which debris is considered to be hazardous when it is generated (both through modifications to the hazardous waste definitions and the contained in principle), and so could affect both the definition of hazardous debris used in this rule, and possibly the extent such debris must be treated by prescribed methods of treatment. EPA has attempted to note in each of the sections below the potential overlap of this proposed rule on the rules adopted today.

Although the Hazardous Waste Identification Rule (HWIR) when promulgated will affect the definition of hazardous debris subject to today's treatment standards, the Agency believes that it is nonetheless appropriate to make the treatment standards effective immediately upon promulgation. The Agency does not believe that today's rule will place an unreasonable burden on generators of hazardous debris that may subsequently be determined by HWIR not to be hazardous because the Agency has provided a national, case-by-case capacity variance for hazardous debris that defers the effective date of today's treatment standards until May 8, 1993. By that time, the Agency believes that the final HWIR will be promulgated and the treatment of debris that HWIR determines is no longer hazardous will be precluded.

C. Treatment Standards for Hazardous Debris

1. Overview

In this section, we discuss: (1) The treatment technologies proposed as BDAT; (2) the contaminants subject to treatment; (3) the debris treatment standards; (4) alternative LDR standard; (5) performance standards that must be met to ensure effective treatment and to comply with the BDAT standards; (6) contaminant restrictions for certain treatment methods; (7) use of treatment trains for multiple contaminants and debris types; (8) treatment of characteristic debris; (9) standards for debris that is inherently toxic (i.e., it fails the TC and EP for metal contamination because it is fabricated from a toxic metal); (10) relationship of TSCA PCB rules to today's rule; (11) relationship of existing agency standards for asbestos to today's rule; (12) special requirements for radioactive debris; and (13) implementation of treatment standards.

2. BDAT Debris Treatment Technologies

a. *Identification of BDAT Treatment Technologies.* The Agency considered a treatment technology to be "available" if the technology itself or the services of the technology are able to be purchased, and the technology substantially diminishes the toxicity of the waste or reduces the likelihood of migration of the waste's hazardous constituents. The technologies that the Agency has identified as best demonstrated available technologies (BDAT) have been used to treat hazardous debris at Superfund sites, to remove radioactive metals from debris, to treat debris-like material contaminated with compounds similar to one or more of the compounds in the debris contaminant categories or, based on engineering judgment, are applicable to debris.

The Agency considered a technology to be demonstrated for a particular waste if the technology currently is in commercial operation for treatment of the waste or constituent of interest or similar wastes or constituents of interest, including wastes not regulated under RCRA, such as PCBs and radioactive waste. The Agency identified demonstrated technologies either through a review of the literature in which current waste treatment practices were discussed, or through information provided by specific facilities currently treating the waste or similar wastes. EPA also considered as demonstrated technologies those used to separate or otherwise process chemicals and other materials which are similar to the waste or constituent of interest.

The Agency also reviewed the properties of debris which may directly affect the efficiency of treatment technologies. Debris characteristics which may affect the performance or effectiveness of treatment technologies to clean various types of debris include:

- Destructibility;
- Hardness and brittleness;
- Moisture content;
- Permeability;
- Size, homogeneity, and location (in situ versus ex situ);
- Surface texture; and
- Total organic carbon (TOC).

Under today's rule, the Agency has identified the following 17 treatment technologies as BDAT for hazardous debris:

- Extraction Technologies:

—Physical Extraction
  —Abrasive blasting
  —Scarification, grinding, and planing
  —Spalling
  —Vibratory finishing
  —High pressure steam and water sprays
—Chemical Extraction
  —Water washing and spraying
  —Liquid phase solvent extraction
  —Vapor phase solvent extraction
—Thermal Extraction
  —High temperature metals recovery
  —Thermal desorption

- Destruction Technologies

—Biodegradation
—Chemical oxidation
—Chemical reduction
—Thermal destruction

- Immobilization Technologies

—Macroencapsulation
—Microencapsulation
—Sealing

Summary descriptions of these technologies are presented in Appendix I of today's preamble and treatment performance standards for each technology are prescribed in Table I, § 268.45. Further, detailed information on the various treatment technologies is presented in the Hazardous Debris Final Rule Technical Support Document.

b. *Changes in Identification of BDAT Technologies From Proposal.* Based on public comment and the Agency's further evaluation, the Agency has determined that two debris treatment technologies proposed as BDAT—electropolishing and ultraviolet radiation—are not BDAT, and an additional technology not proposed as BDAT—high temperature metal recovery—is, in fact, BDAT for

[21] We note that consideration of management practices for exclusion from subtitle C is being evaluated through the proposed Hazardous Waste Identification Rule discussed below in the text.

hazardous debris. The basis for these determinations is discussed below.

(1) Electropolishing Is Not BDAT. The Agency has determined that electropolishing is not BDAT for hazardous debris because of concerns that the technology is intended primarily for smoothing clean metal parts. Painted or contaminated metal parts might not be effectively treated by this method. A contaminating organic waste or paint could electrically insulate the surface from the solution and prevent surface removal of contaminants.

(2) Ultraviolet Radiation Is Not BDAT. The Agency deleted ultraviolet radiation treatment from the list of BDAT technologies for hazardous debris because of difficulties of specifying performance standards that would ensure effective treatment in all cases. This technology is primarily intended for liquid waste treatment where the fluid is passed by a ultraviolet radiation source in a thin stream. This approach is designed to ensure that the ultraviolet light reaches all of the toxic molecules and detoxifies them. If the technology were to be applied to hazardous debris, it would be virtually impossible to ensure that all toxic molecules contaminating the debris were adequately radiated. Sludge and soil caked onto debris would preclude radiation of both inner layers of caked material and the debris surface. Further, even for debris that is relatively free of caked-on materials, the debris would have to be systematically turned to expose all contaminated surfaces to the radiation. The use of sunlight to provide the ultraviolet radiation as proposed as an alternative to an artificial source poses even greater problems of ensuring exposure to ultraviolet radiation at levels that would ensure effective treatment. The Agency's effort to provide for innovative debris treatment at proposal simply went too far.

(3) High Temperature Metal Recovery Is BDAT. The Agency has added high temperature metal recovery (HTMR) to the list of acceptable debris treatment technologies. It is a very effective method for treatment of recoverable metal values in both metal debris and debris that is contaminated with metal-bearing hazardous waste. The Agency did not include HTMR as BDAT at proposal simply because of oversight. Several commenters suggested that we include this method, and the Agency agrees.

We note that HTMR can also effectively treat toxic organic contaminants. If the debris contains more than a total of 500 ppm of toxic organic compounds listed in appendix VIII, part 261, the HTMR facility is subject to the Boiler and Industrial Furnace (BIF) Rule. See § 266.100. The HTMR would be subject to the same controls on organic emissions [22] as other BIFs burning hazardous waste. When the total concentration of toxic organic compounds in the waste is less than 500 ppm, the Agency believes that any emissions of organic compounds attributable to those organic compounds will not pose a hazard to human health and the environment.

3. Contaminants Subject to Treatment

Today's rule requires hazardous debris to be treated by one of the specified technologies [23] for each "contaminant subject to treatment" defined as: (1) the BDAT constituents identified in §§ 268.41 and 268.43 for the listed waste contaminating the debris that are present at detectable levels; [24] (2) the constituents for which the debris exhibits Extraction Procedure toxicity; and (3) cyanide or sulfide if debris exhibits reactivity due to the presence of those constituents. As discussed in section V.C.5 below, although debris may contain several contaminants subject to treatment, the treatment standards generally do not require treatment by multiple technologies (i.e., a treatment train). This is because many of the specified technologies effectively treat various types of contaminants (e.g., metals, aromatic and aliphatic organic compounds, halogenated and nonhalogenated organic compounds).

In the proposed rule, the Agency proposed a broader definition of "contaminants subject to treatment" that would have included constituents on appendix VIII, part 261, that the generator could reasonably know may contaminate the debris at detectable levels. Further, the Agency requested comment on whether the rule should require that debris that is hazardous solely because it exhibits a characteristic (i.e., toxicity, ignitability, or reactivity) be treated for all constituents on appendix VIII, part 261, that the generator could reasonably know may contaminate the debris at detectable levels. The Agency addressed these provisions at proposal because of concern that all toxic constituents present be effectively treated given that debris treated by an extraction or destruction technology and that does not exhibit a characteristic is excluded from subtitle C regulation.

We have determined, however, that neither of these provisions is likely to be necessary to ensure effective treatment of hazardous debris for a number of reasons. Thus, these provisions are not included in today's rule. First, we believe that enough contaminants subject to treatment will be identified for most debris to ensure effective treatment of other toxic contaminants that may be present. Given that most debris is generated by remediation, the debris is often associated with a variety of wastes that will result in a number of contaminants being designated contaminants subject to treatment—either because listed wastes or known to be present, or more likely, because the debris fails the EP [25] for one or more constituents. For example, it is highly unlikely that debris will exhibit only ignitability or reactivity and not fail the TC or be contaminated with a listed waste (and thus, require only deactivation of the ignitability or reactivity characteristic under today's rule) if, in fact, toxic constituents are present at significant levels. Given that most of the debris treatment technologies specified in today's rule are not restricted to specific contaminants other than metal vs. nonmetal contaminants and that many technologies (e.g., surface removal, incineration) have no contaminant restrictions (see section V.C.5 below), the designation of a few contaminants subject to treatment should be sufficient to ensure effective treatment of other toxic contaminants that may be present.

Further, commenters argued, and the Agency agrees, that it would be difficult to implement and enforce a rule that required generators to treat toxic constituents that they have reason to know are present at detectable levels. First, whether the generator, in fact, could have reason to know that a toxic constituent is present is highly

[22] Emissions of metals, HCl, Cl_2, and particulate matter are also controlled by the BIF rule.

[23] Unless EPA determines the hazardous debris no longer contains hazardous waste (see discussion in section V.B.2 of the text) or unless the generator elects to comply with the waste-specific treatment standards for the waste contaminating the debris (see discussion in section V.C.4 of the text).

[24] We note that the generator may presume that the BDAT constituents for the listed waste are present at detectable levels and is not required to sample and analyze the debris to make that determination. If, however, the generator elects to sample and analyze the debris, the Agency acknowledges that this may be a difficult task for many types of debris and debris mixtures. In this situation, the generator must use best engineering judgement to obtain samples that are as representative as practicable.

[25] We note that the Agency is considering proposing treatment standards for TC wastes and debris contaminated with TC wastes. If that rule is promulgated, debris will be identified as hazardous debris if it exhibits the TC for an additional 26 organic compounds many of which are commonly found at remediation sites. Thus, over time, additional debris contaminants will become designated contaminants subject to treatment.

subjective and difficult to enforce. Second, the Agency upon additional consideration believes that, if treatment of such additional toxic constituents were to be required, treatment should only be required if the constituent is present at significant levels, not merely at detection levels. This raises the issue of what is a significant level. Possible criteria include a level of potential health significance or the F039 treatment levels. (We note that the Agency, in fact, requested comment on using these criteria to determine when these other (i.e., other than BDAT constituents for listed waste contaminating the debris and the constituents for which the debris fails the EP) toxic constituents known to be present would be contaminants subject to treatment. See 57 FR 984, n. 11.) Not only is the Agency unsure which approach would be more appropriate, but under either approach—i.e, health-based levels or F039 levels—sampling and analysis would be required if the generator did not want to presume that a toxic constituent known to be present was present at the trigger level. Since it is particularly difficult to take representative samples of untreated debris, EPA considers this approach to be inadvisable.

4. Debris May Be Treated to the Existing Waste-Specific LDRs in Lieu of Today's Debris Treatment Standards

Today's rule gives generators the option of treating hazardous debris to the existing waste-specific treatment standards for the waste contaminating the debris. The treated debris, however, must continue to be managed under subtitle C. If land disposed, the debris must be disposed in a subtitle C landfill. However, such debris would be excluded from subtitle C regulation if the Agency determined that it no longer contained hazardous waste (see discussion above in section V.B.2) or if the treater determined that the debris no longer contained hazardous constituents at levels that may be established under a final Hazardous Waste Identification Rule (see discussion above in section V.B.3).

The Agency is providing this option in today's rule based on the request of numerous commenters. For example, one commenter routinely adds the tyvek suits and rubber gloves worn by facility operators to the waste stream leaving his factory, and wishes to continue doing so. The proposed rule would have required the tyvek suits and rubber gloves (as debris) to be separated from the waste for treatment by the specified technology. The commenter preferred to treat the waste/debris mixture to the waste-specific standards and the Agency believes that this practice is appropriate to provide an additional means of treating debris that substantially reduces toxicant mobility or concentration.

The Agency developed special treatment standards for hazardous debris because of concern that, in most cases, the waste-specific standards would not be practicable for debris given the difficulty in obtaining representative samples of treated debris to document compliance with the concentration-based waste-specific standards. The Agency acknowledges, however, that some types of debris may be amenable to representative sampling and therefore compliance with the waste-specific standards may be workable.[26]

Debris that is treated to the waste-specific treatment standards rather than today's debris treatment standards remains subject to subtitle C regulation because toxic constituents may continue to be present at levels that could pose a hazard to human health and the environment. EPA believes that this position is appropriate for two reasons. First, there is no reason to exclude from subtitle C regulation hazardous debris treated to the waste-specific standards when the waste itself is not excluded when treated to those standards. Second, and moreover, the Agency believes that today's treatment standards will treat debris to levels resulting in minimum threat to human health and the environment. See discussion below. Although meeting the waste-specific standards may result in some cases in levels of toxic constituents in the treated debris that do not pose a hazard to human health and the environment, the Agency is not certain that this will be the case in all situations (and in any case, the issue is more appropriate for resolution in the context of the May 20, 1992, proposed rule, 57 FR 21450).

5. Treatment Standards

In this section, we provide the rationale for the treatment standards for each technology and explain how the standards work, and we explain how the final treatment standards differ from those proposed.

a. *Overview*. Today's rule establishes performance and/or design and operating requirements for 17 treatment technologies that the Agency has designated as BDAT for hazardous debris. See Table I of § 268.45. Although any technology may be used to treat any debris, the treatment standards vary for many technologies according to the type of debris treated.[27] In addition, the rule prohibits the use of some technologies to treat specific types of contaminants. For example, the physical extraction technologies (e.g., abrasive blasting) have no contaminant type restrictions, while thermal desorption may not be used to treat metals other than mercury. Generators (and owners and operators of treatment facilities) may select any treatment technology that is not restricted for the contaminant subject to treatment.

The Agency has attempted to establish performance or design and operating requirements for each of the extraction and destruction technologies that will optimize treatment effectiveness such that hazardous contaminants would not be present at residual levels in the debris that could pose a hazard to human health and the environment. Thus, the treated debris could be excluded from subtitle C regulation. Unfortunately, the Agency was not able to develop objective performance or design and operating standards for all extraction and destruction technologies that would ensure treatment to minimum threat levels (e.g., thermal desorption, biodegradation, and chemical destruction; see discussion below). For these technologies, the Agency is concerned that residual levels of hazardous contaminants may remain in the debris at levels that could pose a hazard to human health and the environment. Consequently, today's rule requires for these technologies that the owner or operator of the treatment unit must make an "Equivalency Demonstration" to the Agency under existing § 268.42(b) that documents that the technology treats contaminants subject to treatment to a level equivalent to that required by the performance and design and operating standards for the other technologies in

[26] We note that commenters may have requested this option out of frustration that the proposed rule did not effectively address the issue of debris mixtures. The proposed rule appeared to require either separation of debris types prior to treatment or the extensive use of treatment trains to treat different debris types. This problem has been remedied in today's final rule by acknowledging the ability of the treatment technologies to treat a greater variety of debris types than proposed. See discussion in section V.C.5 of the text.

[27] In addition, although the rule does not prohibit treatment of specific debris types by a technology, the treatment standards cannot be met as a practical matter for certain debris/technology combinations (e.g., high pressure steam and water sprays cannot remove 0.6 cm of the surface layer of brick, concrete, etc). In other situations, the definition of the technology as a practical matter precludes the use of some technologies for some debris types (e.g., the definition of spalling cannot be met when applied to treat cloth).

Table 1, § 268.45, such that residual levels of hazardous contaminants will not pose a hazard to human health and the environment absent subtitle C control.

Today's treatment standards establish performance standards rather than design and operating standards where supporting data were available. The Agency believes that performance standards will better ensure effective treatment given the variability in contaminant and debris types and properties that affect treatability. Further, performance standards give the owner and operator of the treatment unit the flexibility to tailor the design and operation of the unit to the specific debris/contaminant(s) being treated. An example of a performance standard is the standard for physical extraction technologies (e.g., abrasive blasting) used to treat a metal object where the standard requires decontamination to a "clean metal finish" as defined in the regulation. An example of a design and operating standard is the standard for thermal desorption that limits the thickness of porous debris to 10 cm (4 inches).

EPA recommends that the generator or owner or operator of the treatment facility consider the thermal, chemical, and physical properties of the debris and the contaminants on the debris before selecting a treatment technology to ensure that the performance or design and operating requirements can by achieved. The Agency plans to develop a nonregulatory implementation assistance document to provide assistance on how to select the most appropriate technologies for a given debris/contaminant combination.

Although hazardous debris treatment operations are generally subject to regulation under the interim status or permit standards of parts 270 and 264, 265, or 266,[28] today's hazardous debris performance or design and operating standards are neither interim status nor permit standards. The hazardous debris treatment standards are adopted pursuant to section 3004(m) of RCRA to ensure that debris is treated to minimize the hazardous constituents' toxicity or mobility during future management, while the interim status and permit standards are designed to protect human health and the environment from the operation of the storage, treatment, or disposal facility itself. It is for this reason that today's treatment standards do not address control of emissions that can occur from debris treatment; the Agency is relying on the applicable interim status and permit standards to control treatment emissions. See discussion below in section V.F.

The Agency has grouped the various treatment technologies into categories of like treatment type. Each category is based on the same (or similar) performance or design and operating standards. See Table 1 of § 268.45. We discuss below for each group of treatment technologies the basis for the standards and how the standards will work. Note that the performance or design and operating standards must be met for all debris surfaces that are contaminated with hazardous waste. Thus, if a pipe or pump was used to manage hazardous waste, the performance standards must be met for the inside surfaces of the pipe or pump. Decontamination of the outer surfaces only does not constitute compliance with the debris treatment standards.

b. *Extraction Technologies.* The Agency has classified the extraction technologies as physical extraction, chemical extraction, and thermal extraction.

(1) Physical Extraction Technologies. The physical extraction technologies are: abrasive blasting; scarification, grinding, and planing; spalling; vibratory finishing; and high pressure steam and water sprays. For these technologies, the rule establishes performance standards based on removal of the contaminated layer of the debris. Any contaminant subject to treatment may be treated by these technologies,[29] because the contaminants are removed as residue [30] subject to the treatment standards for the waste contaminating the debris.

In addition, any debris type (e.g., metal, concrete, wood, paper, cloth) may be treated by these technologies. The Agency reasoned that any debris type would be effectively treated provided that the contaminated layer of the debris is removed. We note that, although the rule allows the use of physical extraction technologies on any debris type, it will be impracticable to use these technologies on some debris types and the performance standards cannot be met for some technology/debris combinations. For example, it is impracticable to spall paper or cloth. However, we realize that debris often is comprised of a mixture of debris types, and physical extraction may be the most reasonable technology for the predominate debris type while other types of debris present would be removed as residue. An example is large chunks of concrete that have paper labels adhered to them. Spalling or another physical extraction technology may be practicable for the concrete and the paper labels will be removed as residue. An example of where the performance standard cannot be met for a technology/debris combination is high pressure steam and water spray used to treat brick or concrete. As discussed below, because these debris types are porous and toxic contaminants may be adsorbed below the surface of the debris, the performance standard requires removal of at least the outer 0.6 centimeter surface layer. This technology cannot meet that performance standard for those types of debris. Rather than explicitly prohibiting such practices, however, such practices will be precluded because of the inability to comply with the standards.

To ensure that the contaminated layer of debris is removed and to account for the physical properties of different types of debris, the rule establishes different performance standards for different types of debris.

(a) Metal Objects. Metal objects must be treated to remove foreign matter adhering to the metal to produce a "clean debris surface". The rule defines a "clean debris surface" as a surface that, when viewed without magnification, shall be free of all visible contaminated soil and hazardous waste, except that residual staining caused by soil and waste consisting of light shadows, slight streaks, or minor discolorations, and soil and waste in cracks, crevices, and pits may be present provided that such staining and soil and waste in cracks, crevices, and

[28] Unless treatment occurs in an on-site container, tank, or containment building, the hazardous debris is treated within 90 days of generation, and the unit complies with the appropriate standards of part 265, or unless the treatment occurs within the Area of Containment (AOC) at a Superfund remediation site and the generator complying with today's treatment standards in order to remove the treated debris from the AOC and manage it as debris excluded from subtitle C. See discussion in section V.F. of the text.

[29] As discussed below in the text, today's rule establishes additional requirements for certain technologies in order to exclude the treated debris from subtitle C when the debris is contaminated with waste that is listed for dioxins (EPA Hazardous Waste Numbers F020, F021, F022, F023, F026, or F027). The Agency did establish such additional requirements for treatment of debris contaminated with dioxin-listed waste when treated by the physical extraction technologies, however, because the Agency believes that it is highly unlikely that compliance with the rigorous performance standards for these physical extraction technologies will allow significant residual levels of contaminants such that even highly toxic contaminants could pose a hazard to human health and the environment absent subtitle C control.

[30] Except that for spalling, the spalled material is considered untreated debris, not residue, and must be treated before land disposal. See additional discussion in the text.

pits shall be limited to no more than 5% of each square inch of surface area.

The rule allows minor residual staining caused by soil and waste and soil and waste to remain in cracks, crevices, and pits of up to 5% of each square inch of surface area [31] because of the impracticability of cleaning metal debris to a "white metal finish" as proposed. The Agency selected the 5% surface area criterion because: (1) it is within the range of reasonable levels—1% to 10%—that could have been selected; (2) it is generally equivalent to the Steel Structures Painting Council's specification for "Near-White Blast Cleaning" for cleaning steel surfaces by the use of abrasives; [32] and (3) it should not allow toxic contaminants to remain at levels that could pose a hazard to human health and the environment absent subtitle C regulation, and should remove contaminants so that threats posed by disposal of the debris are minimized.

(b) Brick, Cloth, Concrete, Paper, Rock, Pavement, and Wood. The performance standard for these types of debris requires: (1) Removal of at least 0.6 centimeters of the surface layer; and (2) treatment to a "clean debris surface." Removal of 0.6 centimeters of the surface layer is required for these types of debris because they may be porous and toxic contaminants may by absorbed within the debris. (The Agency recognizes that, as a practical matter, the 0.6 cm surface removal requirement precludes the use of this technology for most porous debris.) To ensure removal of contaminants that may be absorbed to depths beyond 0.6 centimeters, the rule requires removal of virtually all staining that could be indicative of the presence of toxic contaminants. The rule allows minor residual staining and foreign matter in cracks and crevices on up to 5% of the surface area (on a square inch basis) as a reasonable and practicable method to help ensure that the standards do not require treatment to a level beyond that necessary to ensure that the treated debris does not pose a hazard to human health and the environment absent subtitle C regulation. We note that staining that is not indicative of the potential presence of hazardous waste or contaminated soil (e.g., rust stains on concrete adjacent to steel reinforcing bars) need not be removed and is not considered in determining compliance with the maximum 5% surface area limit on residual staining. The basis for the 5% surface area limit (on a square inch basis) on residual staining and foreign matter in cracks and crevices is the same as the basis discussed above for the definition of clean metal finish.

(c) Glass, Rubber, Plastic. The physical extraction performance standards for these types of debris are the same as for brick, concrete, etc., except that removal of at least 0.6 centimeters of the surface layer is not required. Removal of the surface layer for glass, rubber, or plastic is not required because glass is nonporous and will not absorb contaminants below the surface, and rubber and plastic, although permeable, are not likely to leach absorbed contaminants at substantial rates.

(2) Chemical Extraction. The technologies classified as chemical extraction are water washing and spraying; liquid phase solvent extraction; and vapor phase solvent extraction. The performance standards for these technologies are based on dissolution of the contaminants into the cleaning solution. Removal of the outer debris layer is not intended.

(a) Water Washing and Spraying. Water sprays or water baths will effectively treat debris when sufficient temperature, pressure, residence time, agitation, surfactants, acids, bases, and/or detergents are used to meet the performance standards in accord with the contaminant restrictions. The rule requires that the debris must be treated to a "clean debris surface" (see discussion above) to ensure effective treatment to levels of hazardous contaminants that are not likely to pose a hazard to human health and the environment absent subtitle C control.

For porous debris—brick, cloth, concrete, paper, pavement, rock, and wood—the rule provides two other requirements. The thickness (i.e., one dimension) of each piece of porous debris may not be more than 1.2 cm (i.e., ½ inch), and the contaminants must be soluble to at least 5% by weight in the water solution or 5% by weight in the emulsion, as applicable. The Agency is applying these standards for porous debris to ensure effective extraction of toxic contaminants that may be absorbed below the surface layer of the debris.

If reducing the thickness of debris to 1.2 cm to meet the treatment standards results in debris that no longer meets the 60 mm minimum particle size limit for debris, such material is subject to the waste-specific treatment standards for the waste contaminating the material, unless the debris has been cleaned and separated from contaminated soil and hazardous waste before size reduction. This is consistent with the Agency's position that material with a particle size less than 60 mm is amenable to conventional treatment for process waste and small particle-sized material (i.e., as opposed to large debris objects) and that such material can be reasonably sampled for analysis to document compliance with the concentration-based treatment standards for the waste contaminating the material.

If the debris has been cleaned and separated from contaminated soil and hazardous waste before size reduction, the material remains classified as debris subject to today's treatment standards even if it no longer has a 60 mm particle size. The Agency believes that cleaning and separation of contaminated soil and hazardous waste will substantially reduce the concentration of toxic constituents such that the debris should contain minimum threat levels subsequent to treatment by an extraction or destruction technology. The level of cleaning and separation that is required is the same as required for separation of treatment residue from treated debris. See Note 9 to Table 1, § 268.45. At a minimum, simple physical or mechanical methods must be used such as vibratory or trommel screening or water washing. The debris surface need not be cleaned to a "clean debris surface" as defined in Table 1; rather, the surface must be free of caked soil, waste, or other nondebris material. Nondebris materials so separated are subject to the waste-specific treatment standards for the waste contaminating the material.

Porous debris (i.e., brick, cloth, concrete, paper, pavement, rock, or wood) that is contaminated with a waste listed for dioxin—EPA Hazardous Waste Numbers F020, F021, F022, F023, F026, or F027—is subject to additional controls. Because of the potential toxicity of the constituents in these wastes, the Agency believes that it is prudent to require additional controls to ensure that the potentially highly toxic constituents in these wastes are extracted from below the debris surface and that the treated debris poses minimum threat to human health and the environment absent subtitle C control. Accordingly, the rule requires the treater to make an "Equivalency Demonstration" to the Agency under

[31] Note that the 5% surface area criterion is applied to each square inch of the debris surface that has been contaminated with hazardous waste. The area covered by large stains cannot be averaged against large unstained areas. Only 5% of the area within any square inch can contain a residual stain.

[32] See the May 18, 1992, memorandum from Peter Shields, Radian, to Mark Mercer, EPA, entitled "Industry Standards for Cleanliness of Metal Surfaces".

existing § 268.42(b) that documents that the technology treats contaminants subject to treatment in these dioxin-listed wastes to a level equivalent to that required for these contaminants by the performance and design and operating standards for other technologies in Table 1, § 268.45, such that residual levels of hazardous contaminants will not pose a hazard to human health and the environment absent subtitle C control.

(b) Liquid Phase Solvent Extraction. This technology decontaminates debris surfaces by applying a nonaqueous liquid or liquid solution which causes the toxic contaminants to enter the liquid phase and be flushed away from the debris along with the liquid or liquid solution using agitation, temperature, and residence time sufficient to meet the performance standards. The treatment standards for this technology are the same as for water washing and spraying because the technologies use the same principles to extract toxic contaminants from debris.

(c) Vapor Phase Solvent Extraction. This technology decontaminates debris surfaces by applying an organic vapor which causes the toxic contaminants to enter the vapor phase using sufficient agitation, residence time, and temperature and to be flushed away with the organic vapor such that the performance standards are achieved. The treatment standards for this technology are the same as for water washing and spraying, except that porous debris surfaces must be in contact with the organic vapor for more than 60 minutes. This treatment time is consistent with state-of-the-art practices and is necessary to ensure effective extraction of contaminants.

(3) Thermal Extraction. The Agency has classified two technologies as thermal extraction: High temperature metals recovery and thermal desorption.

(a) High Temperature Metals Recovery (HTMR). HTMR furnaces are smelting, melting, or refining furnaces (including pyrometallurgical devices such as cupolas, reverberator furnaces, sintering machines, roasters, and foundry furnaces (see § 260.10 definition of "industrial furnace")) that use sufficient heat, residence time, mixing, fluxing agents, and/or carbon to extract metals from debris. HTMR furnaces are potentially subject to regulation under the Boiler and Industrial Furnace (BIF) Rule (subpart H, part 266) when they burn hazardous debris.[33]

Today's rule requires that, for nonslagging furnaces (e.g., refining furnaces), treatment residuals must be separated from the debris. In addition, such separated residue must meet the waste-specific treatment standards for organic compounds in the waste contaminating the debris prior to further treatment. Further, these residues must meet the waste-specific treatment standards for all BDAT constituents in the waste contaminating the debris prior to land disposal. Finally, if debris is contaminated with a dioxin-listed waste, HTMR is not BDAT and the treated debris is not excluded from subtitle C unless the treater makes an "Equivalent Technology" demonstration to the Agency under § 268.42(b) that documents that the technology treats contaminants subject to treatment to a level equivalent to that required by the performance and design and operating standards for other technologies in Table 1, § 268.45, such that residual levels of hazardous contaminants will not pose a hazard to human health and the environment absent subtitle C control.

Today's rule does not establish performance or design and operating standards for slagging HTMR furnaces (other than the requirements inherent in the definition—a melting or smelting furnace must melt metals and extract the metals from debris) because a slagging furnace is likely to provide effective treatment for all contaminants, except perhaps for chlorinated dioxins as discussed below, and for all debris types.

For nonslagging (i.e., refining furnaces such as roasters) HTMR furnaces, the rule ensures treatment of both metal and organic contaminants. First, the definition of HTMR furnaces requires that metals must be separated from the debris. Thus, not only will metals be removed, but temperatures hot enough to separate metals from debris should also remove organic contaminants from the debris (with perhaps the exception of dioxins, as discussed below). Second, to help ensure that the HTMR unit has effectively removed organic contaminants in the debris the rule requires that the residue be separated from the treated debris and that the separated residue must meet the waste-specific treatment standards for the BDAT organic contaminants in the waste contaminating the debris prior to further treatment.

In addition, the Agency is concerned that potentially extremely toxic contaminants may not be destroyed (or removed with the residue) to levels that would not pose a hazard to human health and the environment absent subtitle C control. Consequently, if debris is contaminated with a dioxin-listed waste, HTMR is not BDAT for the debris and the debris is not excluded from subtitle C after treatment unless the treater obtains approval from the Director under an equivalent technology demonstration provided by § 268.42(b) for the design and operating conditions of the HTMR unit. The rule provides this restriction for dioxin-listed waste because of concern that if such contaminants remained undestroyed even at low concentrations in the residue and were not completely removed from the treated debris, that the debris could pose a health or environmental hazard absent subtitle C control.

(b) Thermal Desorption. Thermal desorption is heating in an enclosed chamber under either oxidizing or nonoxidizing atmospheres at sufficient operating temperature and residence time such that the contaminants subject to treatment are vaporized and removed from the heating chamber in a gaseous exhaust streams.[34] The rule establishes operating and performance standards and contaminant restrictions, and requires the treater to make a demonstration of "Equivalent Technology" under § 268.42(b) to document that the technology treats contaminants subject to treatment to a level equivalent to that required by the performance and design and operating standards for other technologies in Table 1, § 268.45, such that residual levels of hazardous contaminants will not pose a hazard to human health and the environment absent subtitle C control.

The Agency attempted to develop objective treatment standards that would obviate the need for an equivalency demonstration (see discussion above). The Agency determined, however, that it was very difficult to establish universal operating

[33] See § 266.100(c) that states generally that a smelting, melting, or refining furnace that burns a hazardous waste with a heating value of 5,000 Btu/lb or more or that contains a total concentration of toxic organic compounds exceeding 500 ppm by weight is subject to the BIF Rule.

[34] We note that a thermal desorber is regulated either as an incinerator (if the device is direct-fired or if the off-gas is burned in an afterburner) under subpart O of part 264 or 265, or as a thermal treatment unit under subpart X, part 264 or subpart P, part 265. To distinguish between thermal desorption and thermal destruction (for which separate debris treatment standards are provided) for purposes of complying with this rule, the primary purpose of thermal desorption is to volatilize contaminants and to remove them from the treatment chamber for subsequent destruction or treatment. We note that the treatment standards in Table 1, § 268.45 for thermal destruction specifically excludes thermal desorbers.

limits for the key operating parameters that affect treatment efficiency—temperature, residence time, size of porous debris, bed depth, and volatility of the contaminant—that would strike a balance between ensuring treatment to minimum threat levels and establishing requirements that could grossly over-regulate in many situations. Rather, the Agency believes that operating requirements can best be determined on a case-by-case basis (i.e., under an equivalent technology demonstration under § 268.42(b)) considering the parameters listed above. In addition, the Agency believes that the performance standard used for physical and chemical extraction—treatment to a clean debris surface—is not practicable for thermal desorption because treated debris surfaces will continue to have a dusting of residue after separation of the debris from the residue by simple, physical or mechanical means (unless water washing is used). See discussion below regarding the requirement for separation of debris from residue.

The treatment standards for thermal desorption require, in addition to the case-by-case Agency approval of design and operating conditions, that hazardous contaminants be vaporized (by virtue of the definition of thermal desorption), and restricts the use of the technology for metal contaminants other than mercury (i.e., thermal desorption is not BDAT for metals other than mercury). In addition, to help ensure extraction of contaminants from below the surface of porous debris, the rule establishes a maximum thickness (in one dimension) for porous debris of 10 cm (4 inches).[35] The 4 inch maximum thickness limit is consistent with state-of-the-art practices. The restriction on metals other than mercury is provided because they are not likely to be extracted from below the debris surface at normal desorption temperatures and residence times.

We note that we considered restricting the use of thermal desorption for only porous debris that is contaminated with a metal other than mercury. We reasoned that metal contaminants in soil or waste on the surface of nonporous debris will be physically separated from the debris along with the soil or waste during or after desorption, and thus a restriction would not be necessary. However, we are also concerned about metal contaminants that may remain on the surface of nonporous (and porous) debris after desorption and after separation of the treated debris from the residue. An example is a piece of steel contaminated with a metal-bearing paint that causes the steel to fail the TC. The metal may not be desorbed and the paint would not be separated from the steel during the simple physical or mechanical separation of residue from debris. Although the steel would continue to fail the TC, it would have been treated to meet BDAT and could be land disposed in a subtitle C facility. This is inconsistent with the Agency's view that BDAT for a TC waste must cause the waste to no longer exhibit the TC.

The treatment standard for thermal desorption also requires separation of the treated debris from treatment residuals and soil, waste, or other nondebris material (collectively referred to as residuals) because residuals are subject to the treatment standards for the waste contaminating the debris. See discussion in Section V.E. Not only will these residuals contain unvolatilized metals that require further treatment, but the Agency is using the residue separated from debris as a surrogate means to ensure effective debris treatment. The rule achieves this objective by requiring that the residue separated from the treated debris must meet the waste-specific treatment standards for organic compounds in the waste contaminating the debris. If the residue (prior to further treatment) does not meet applicable treatment standards for organic compounds, it is an indication that the desorption process did not effectively extract the organic contaminants subject to treatment. Thus, the treatment is not BDAT, the treated debris is not excluded from subtitle C, and both the residues and the debris cannot be land disposed without further treatment.

Separation of the desorbed debris from treatment residuals (i.e., soil, waste, or other nondebris materials) must be accomplished using simple physical or mechanical means such as vibratory or trommel screens or water washing. The separation process need not produce a "clean debris surface"[36] as discussed above, however; rather the debris surface must be free of caked residuals or nondebris materials such as soil or waste. For example, debris need not be water washed after trommel screening to remove dust from residuals or nondebris material. (Note that the use of water washing to separate thermally desorbed debris from residuals and nondebris materials need not comply with the treatment standards for water washing (e.g., treatment to a "clean debris surface") because the debris has already been treated by an alternative technology.)

c. *Destruction Technologies.* The Agency has identified two classifications of destruction technologies: chemical destruction and thermal destruction. These technologies are designed and operated to destroy hazardous contaminants on debris surfaces and in surface pores.

(1) Biodegradation. Biodegradation is the removal of hazardous contaminants from debris surfaces and surface pores in an aqueous solution and biodegradation of organic or nonmetallic inorganic compounds (i.e., inorganics that contain phosphorus, nitrogen, or sulfur) in units operated under either aerobic or anaerobic conditions. The rule establishes operating and performance standards and contaminant restrictions, and requires the treater to make a demonstration of "Equivalent Technology" under § 268.42(b) to document that the technology treats contaminants subject to treatment to a level equivalent to that required by the performance and design and operating standards for other technologies in Table 1, § 268.45, such that residual levels of hazardous contaminants will not pose a hazard to human health and the environment absent subtitle C control.

The Agency attempted to develop objective treatment standards that would obviate the need for an equivalency demonstration (see discussion above). The Agency determined, however, that it was very difficult to establish universal operating limits for the key operating parameters that affect treatment efficiency—type of matrix contaminating the debris, biological proprieties of the contaminant, temperature, pH, treatment time, biomass concentration, moisture level, and for aerobic biodegradation, oxygen concentration—that would strike a balance between ensuring treatment to minimum threat levels and establishing requirements that could

[35] See previous discussion in the text that, if size reduction of debris to meet the treatment standards reduces the particle size to below the minimum 60 mm size limit for the definition of debris, such nondebris material is subject to the waste-specific treatment standards for the waste contaminating the material, unless the debris has been cleaned and separated from contaminated soil and waste prior to size reduction.

[36] "Clean debris surface" means the surface, when viewed without magnification, shall be free of all visible soil, waste, paint, or other foreign (i.e., nondebris) matter, except that residual staining consisting of light shadows, slight streaks, or minor discolorations, and foreign matter in cracks and crevices may be present provided that such staining and foreign matter in cracks and crevices shall be limited to no more than 5% of each square inch of surface area.

grossly over-regulate in many situations. Rather, the Agency believes that operating requirements can best be determined on a case-by-case basis (i.e., under an equivalent technology demonstration under § 268.42(b)) considering the parameters listed above.

In addition, the Agency believes that the performance standard used for physical and chemical extraction—treatment to a clean debris surface—is not practicable for biodegradation because treated debris surfaces are likely to fail that standard even though organic contaminants may have been destroyed and metal contaminants may have been extracted. Further, the Agency could not identify a generic standard that would ensure effective treatment of organic contaminants that may be beneath the surface of porous debris.

In addition to the requirement to make an equivalency demonstration, the treatment standards establish a maximum thickness (in one dimension) for porous debris of 1.2 cm (½ inch.[37] These requirements will help ensure extraction of contaminants from below the surface of porous debris.

The rule also restricts the use of biodegradation for metal contaminants because metals are not destroyed by the biomass (i.e., biodegradation is not BDAT for metals). Further, the performance and design and operating standards would not ensure that undestroyed metal would partition to the biomass for treatment to the numeric standards for the waste contaminating the debris. This is because the performance standard does not require treatment to a "clean debris surface" as discussed above, so that neither the performance standard nor the requirement to separate treated debris from residuals (see discussion below) would ensure that metal contaminants would partition to the residue.

The treatment standard for biodegradation requires separation of the treated debris from treatment residuals (i.e., soil, waste, or other nondebris material) because residuals are subject to the numerical treatment standards for the waste contaminating the debris. See discussion in section V.E. Not only will these residuals contain metal contaminants that require further treatment, but the Agency is using the residue separated from debris as a surrogate means to ensure effective debris treatment. Accordingly, the debris treatment standard also requires that the residue separated from the treated debris must meet the waste-specific treatment standards for organic compounds in the waste contaminating the debris prior to further treatment. If the residue (prior to further treatment) does not meet applicable treatment standards for organic compounds, it is an indication that the biodegradation process did not effectively destroy the organic contaminants subject to treatment. Thus, the treatment is not BDAT, treated debris is not excluded from subtitle C, and both the residues and the debris cannot be land disposed without further treatment.

Separation of the biodegraded debris from treatment residuals, soil, waste, or other nondebris materials (collectively referred to as residuals and subject to the treatment standards for residuals) must be accomplished using simple physical or mechanical means such as vibratory or trommel screens or water washing. The separation process need not produce a "clean debris surface" as discussed above, however; rather the debris surface must be free of caked biomass or nondebris materials such as soil or waste. For example, the use of water to wash off the biomass or other foreign matter from the debris after removal from the treatment process does not subject the debris to the treatment standards for water washing (e.g., treatment to a "clean debris surface"). This is because the debris has already been treated by an alternative technology.

(2) Chemical Destruction. The rule establishes two chemical destruction technologies as BDAT: Chemical oxidation and chemical reduction.

(a) Chemical Oxidation. Chemical oxidation is chemical or electolytic oxidation utilizing the following oxidation reagents (or waste reagents) or combination of reagents: Hypochlorite (e.g., bleach); chlorine; chlorine dioxide; ozone or UV (ultraviolet light) assisted ozone; peroxides; persulfates; perchlorates; permanganates; and/or other oxidizing reagents of equivalent destruction efficiency. Chemical oxidation specifically includes what is referred to as alkaline chlorination.

The Agency was not able to develop objective performance or design and operation standards because of the variety of oxidation reagents that could be used and the variety of chemical and physical properties of debris and hazardous contaminants. In addition, the Agency believes that the performance standard used for physical and chemical extraction—treatment to a clean debris surface—is not practicable for chemical oxidation because treated debris surfaces are likely to fail that standard even though organic contaminants may have been destroyed and metal contaminants may have been extracted. Further, the Agency could not identify a generic standard that would ensure effective treatment of organic contaminants that may be beneath the surface of porous debris. Consequently, the primary treatment standard for chemical oxidation requires the treater to make a demonstration of "Equivalent Technology" under § 268.42(b) to document that the technology treats contaminants subject to treatment to a level equivalent to that required by the performance and design and operating standards for other technologies in Table 1, § 268.45, such that residual levels of hazardous contaminants will not pose a hazard to human health and the environment absent subtitle C control. See discussion above.

The rule also restricts the use of chemical oxidation for metal contaminants because metals are not destroyed by the chemical reagents (i.e., chemical oxidation is not BDAT for metals). Further, the performance and design and operating standards would not ensure that undestroyed metal would partition to the residue for treatment to the numeric standards for the waste contaminating the debris. This is because the performance standard does not require treatment to a "clean debris surface" as discussed above, so that neither the performance standard nor the requirement to separate treated debris from residuals (see discussion below) would ensure that metal contaminants would partition to the residue.

In addition, to help ensure effective treatment, the treatment standard requires that porous debris—brick, cloth, concrete, paper, pavement, rock, and wood—cannot have a thickness exceeding 1.2 cm (½ inch) [38] prior to treatment to ensure effective treatment of contaminants absorbed beyond the debris surface.

Finally, the rule requires that the treated debris must be separated from

[37] See previous discussion in the text that, if size reduction of debris to meet the treatment standards reduces the particle size to below the minimum 60 mm size limit for the definition of debris, such nondebris material is subject to the waste-specific treatment standards for the waste contaminating the material, unless the debris has been cleaned and separated from contaminated soil and waste prior to size reduction.

[38] See previous discussion in the text that, if size reduction of debris to meet the treatment standards reduces the particle size to below the minimum 60 mm size limit for the definition of debris, such nondebris material is subject to the waste-specific treatment standards for the waste contaminating the material, unless the debris has been cleaned and separated from contaminated soil and waste prior to size reduction.

treatment residues, and that such separated residue must meet the waste-specific treatment standards for organic compounds for the waste contaminating the debris. See discussion above for rationale and information on how this provision works.

(b) Chemical Reduction. Chemical reduction is a chemical reaction utilizing the following reducing reagents (or waste reagents) or a combination of reagents: Sulfur dioxide; sodium, potassium, or alkali salts of sulfites, bisulfites, and metabisulfites, and polyethylene glycols (e.g., NaPEG and KPEG); sodium hydrosulfide; ferrous salts; and/or other reducing reagents of equivalent efficiency. The treatment standards for chemical reduction are identical to those for chemical oxidation because the technologies are based on similar chemical reactions.

(3) Thermal Destruction. Thermal destruction is treatment in an incinerator operating in accordance with subpart O of part 264 or 265, a boiler or industrial furnace operating in accordance with subpart H of part 266, or other thermal treatment unit operated in accordance with subpart X, part 264 (permit standards) or subpart P, part 265 (interim status standards).

As noted above in the discussion of treatment standards for thermal desorption, a thermal desorber is regulated either as an incinerator (if the device is direct-fired or if the off-gas is burned in an afterburner) under subpart O of part 264 or 265, or as a thermal treatment unit under subpart X, part 264 or subpart P, part 265. To distinguish between thermal desorption and thermal destruction (for which separate debris treatment standards are provided) for purposes of complying with this rule, the primary purpose of thermal desorption is to volatilize contaminants and to remove them from the treatment chamber for subsequent destruction or treatment. The definition of thermal destruction in Table 1, § 268.45, specifically excludes thermal desorbers.

Today's rule requires that treatment residuals be separated from the debris and restricts the use of thermal destruction (i.e., thermal treatment is not BDAT) for inorganic debris contaminated with a metal other than mercury. In addition, if debris is contaminated with a dioxin-listed waste, thermal destruction is not BDAT and the treated debris is not excluded from subtitle C unless the treater makes an "Equivalent Technology" demonstration to the Agency under § 268.42(b) that documents that the technology treats contaminants subject to treatment to a level equivalent to that required by the performance and design and operating standards for other technologies in Table 1, § 268.45, such that residual levels of hazardous contaminants will not pose a hazard to human health and the environment absent subtitle C control. (Note as discussed below that these restrictions do not apply to vitrification.)

Given that thermal destruction uses substantially higher temperatures and often longer residence times than thermal desorption, the Agency believes that thermal destruction will destroy all but the most toxic hazardous nonmetal contaminants to minimum threat levels. Although metal contaminants will not be destroyed, metal contaminants in organic debris (e.g., wood, paper) will be removed from the treated debris. Metals in organic debris will partition to the residue (i.e., the material resulting from treatment that remains subject to numerical treatment standards) because the organic debris will be destroyed. Given that the treatment standards require separation of treated debris from the residue, the metals from the organic debris will partition to the residue for subsequent treatment to the waste-specific treatment standards for the waste contaminating the debris.[39] Thus, only metals contaminating inorganic debris (e.g., concrete, bricks) may remain untreated if they are not volatilized. To ensure treatment of such metals, the rule restricts the use of thermal destruction (i.e., thermal treatment is not BDAT) for inorganic debris contaminated with a metal other than the highly volatile mercury.

The treatment standards also require that the residue separated from the treated debris must meet the waste-specific treatment standards for the BDAT organic contaminants in the waste contaminating the debris prior to further treatment. This will help ensure that the thermal destruction unit has effectively destroyed organic contaminants in the debris.

In addition, the Agency is concerned that extremely toxic contaminants may not be destroyed (or removed with the residue) to levels that would not pose a hazard to human health and the environment absent subtitle C control. Consequently, if debris is contaminated with a dioxin-listed waste, incineration is not BDAT for the debris and the debris is not excluded from subtitle C after treatment unless the treater obtains approval from the Director of the design and operating conditions of the thermal destruction unit. We considered applying this restriction only to porous, inorganic debris under the reasoning that the contaminants in dioxin-listed waste would partition to the residue for nonporous debris (e.g., metal) and organic, porous debris (e.g., wood). We were concerned, however, that if such contaminants remained undestroyed even at low concentrations in the residue and were not completely removed from the treated debris, that the debris could pose a health or environmental hazard absent subtitle C control. Given that the requirements for separation of residue and treated debris do not require a "clean debris surface" but rather allow a dusting of residue to remain on the debris, we believe that it is prudent to establish this restriction on dioxin-listed waste.

Finally, we note that vitrification is a type of thermal destruction and that the rule establishes special (i.e., reduced) requirements for vitrification. Although the Agency classified vitrification as both thermal destruction and an immobilization technology at proposal (57 FR 1036), the Agency believes that the regulation is more easily understood if vitrification is classified only as thermal destruction with appropriate consideration given to the fact that vitrification heats the debris to extremely high temperatures resulting in the formation of nonasbestiform glass. The fact that vitrification transforms debris into a glass-like residue is the basis for the special requirements established for vitrification: (1) The restriction on metal contaminants for porous, inorganic debris does not apply; and (2) the requirement for Agency approval of design and operating conditions to treat debris contaminated with dioxin-listed waste does not apply. Nonetheless, the vitrified residue, like all debris treatment residue, is subject to the waste-specific treatment standards for the waste contaminating the debris.

d. *Immobilization Technologies.* The Agency has identified three immobilization technologies as BDAT for hazardous debris: macroencapsulation, microencapsulation, and sealing. Immobilized debris must be land disposed in a subtitle C facility;[40] it is not excluded from subtitle C regulation because the contaminants have not been destroyed or removed but rather contained indefinitely. Today's rule

[39] Although metals in soil or waste contaminating the debris may be removed by separation of the treated debris from these materials as the rule requires, metals in metal-bearing, heat resistant coatings on inorganic debris may neither be volatilized nor separated from the treated debris.

[40] In the Phase II land disposal restrictions rule, the Agency will reopen and request comment on the issue of whether immobilized debris should be excluded from subtitle C regulation.

establishes only general, nonobjective performance standards for these technologies rather than the more prescriptive standards that were proposed (57 FR 1035–1036) because, based on public comment and the Agency's re-evaluation, the Agency is concerned that the proposed prescriptive standards may be overly restrictive (i.e., by requiring conditions that are more than necessary to ensure immobilization prior to subtitle C management) [41] in some cases and ineffective in others. Nonetheless, the Agency believes that the performance standards promulgated will substantially reduce the likelihood of migration of hazardous constituents from the debris as required by RCRA section 3004(m)(1).

(a) Macroencapsulation. Macroencapsulation is the application of surface coating materials such as polymeric organics (e.g., resins and plastics) or the use of a jacket of inert inorganic materials to substantially reduce surface exposure to potential leaching media. The treatment standard requires that the encapsulating material must completely encapsulate the debris (i.e., the encapsulant must completely surround the debris and be unbroken). Further, the encapsulating material must be resistant to degradation by the debris and its contaminants and materials into which it may come into contact after placement (leachate, other waste, microbes) to ensure that the likelihood of migration of toxic contaminants has been substantially reduced.

(b) Microencapsulation. Microencapsulation is stabilization of the debris with the following reagents (or waste reagents) such that the leachability of the hazardous contaminants is reduced: Portland cement; or lime/pozzolans (e.g., fly ash and cement kiln dust). Reagents (e.g., iron salts, silicates, and clays) may be added to enhance the set/cure time and/or compressive strength, or to reduce the leachability of the hazardous constituents. The performance standard for microencapsulation requires that the leachability of the hazardous contaminants must be reduced.

We note that the proposed rule would have prohibited the presence of free liquids in the microencapsulated debris. Today's rule does not provide this explicit prohibition because free liquids are prohibited from land disposal facilities under existing requirements—§ 264.314 or 265.314.

If the treater reduces the particle size of debris to make it amenable to microencapsulation so that the debris no longer meets the 60 mm minimum particle size limit for debris, such material is subject to the waste-specific treatment standards for the waste contaminating the material, unless the debris has been cleaned and separated from contaminated soil and waste before size reduction. This is consistent with the Agency's position that material with a particle size less than 60 mm is amenable to conventional treatment for process waste and small particle-sized material (i.e., as opposed to large debris objects) and that such material can be reasonably sampled for analysis to document compliance with the concentration-based treatment standards for the waste contaminating the material.

If the debris has been cleaned and separated from contaminated soil and hazardous waste [42] before size reduction, the material remains classified as debris subject to today's treatment standards even if it no longer has a 60 mm particle size. The Agency believes that cleaning and separation of contaminated soil and hazardous waste will substantially reduce the concentration of toxic constituents such that, upon microencapsulation and placement in a subtitle C unit, the toxic constituents should not pose a hazard to human health and the environment.

The level of cleaning and separation that is required is the same as required for separation of treatment residue from treated debris. See Note 9 to Table 1, § 268.45. At a minimum, simple physical or mechanical methods must be used such as vibratory or trommel screening or water washing. The debris surface need not be cleaned to a "clean debris surface" as defined in Table 1; rather, the surface must be free of caked soil, waste, or other nondebris material. Nondebris materials so separated are subject to the waste-specific treatment standards for the waste contaminating the material.

(c) Sealing. Sealing is the application of an appropriate material which adheres tightly to the debris surface to avoid exposure of the surface to potential leaching media. When necessary to effectively seal the surface, sealing entails pretreatment of the debris surface to remove foreign matter and to clean and roughen the surface. Sealing materials include epoxy, silicone, and urethane compounds; paint may not be used as a sealant.

The performance standard requires that the sealing must be performed to avoid exposure of the debris surface to potential leaching media—that is, the sealant must completely enclose the debris. Further, the sealant must be resistant to degradation by the debris and its contaminants and materials into which it may come into contact after placement (leachate, other waste, microbes) to ensure that the likelihood of migration of toxic contaminants has been substantially reduced.

e. *Changes to the Proposed Rule.* In addition to the changes from proposal discussed above, today's final rule greatly simplifies presentation of the treatment standards. Proposed Table 1 (indicating by YES or NO which technologies would be BDAT for which debris types when specific contaminant categories were present) and Table 2 (classifying contaminants by category) are not promulgated. Nonetheless, the final rule will operate essentially as the Agency had intended for the proposal rule. Rather than explicitly identifying acceptable technology/debris/contaminant combinations in two tables and providing the performance or design and operating standards in a third table as proposed, the final rule establishes the treatment standards in a single table—Table 1 of § 268.45. Not only was the proposed approach confusing, but proposed Table 1 forced unintended consequences.

Proposed Table 1 would have prohibited the use of particular technologies to treat certain debris types contaminated with certain hazardous constituents. In most cases, the proposed prohibition was based on the impracticability of applying the technology to the debris type rather than a determination as to whether the technology would effectively treat the debris if it was (or could be) applied. An example is the proposed prohibition on using abrasive blasting for paper, cloth, rubber, and plastic. The Agency has determined that abrasive blasting should be allowed for these types of debris because they may be mixed with debris that is amenable to the technology and would be converted to a treatment residue. An example is a steel I-beam that has paper labels on it. If abrasive blasting was used to treat the I-beam, the performance standards would ensure that the paper labels became part of the treatment residual subject to the treatment standard for the waste contaminating the debris.

We note, however, that depending on the type of contaminants subject to

[41] For example, by requiring a minimum 7 day cure time for microencapsulation when some reagents can adequately stabilize some debris types in much less time.

[42] We note that mixtures of contaminated soil, waste, and debris are regulated as debris if the mixture is at least 50% debris by volume. Thus, materials regulated as debris may contain high concentrations of toxic constituents.

treatment and the technology selected to treat the debris, more than one treatment technology may be required to meet the standards. For example, if water washing was used as an extraction technology for a porous debris (e.g., concrete) with a contaminant subject to treatment that was not soluble to at least 5% by weight in the water solution, another technology (e.g., thermal desorption) must be used to treat that contaminant.

In summary, today's final rule uses the definition of the technology, the performance or design and operating standards, and the contaminant restrictions provided by Table 1 of § 268.45 to ensure effective treatment of hazardous debris.

6. Treatment of Characteristic Debris

EPA proposed that debris that exhibits a characteristic of ignitability or reactivity, or that is contaminated with wastes that are ignitable, reactive, or corrosive, be treated to deactivate the waste. See 57 FR 1021. The Agency solicited comment on the question of whether such debris should also be treated for all Appendix VIII constituents that could reasonably be expected to be contaminating the debris (see 57 FR 984–85), and whether simple dilution should be allowed as a means of achieving deactivation, *id.* at 990.

In the third third final rule, EPA established deactivation as a treatment standard for certain ignitable, corrosive, and reactive wastes, and allowed dilution as a means of achieving this standard. In large part, this was due to the enormous diversity of wastes exhibiting these characteristics and the difficulty of ascertaining the existence or extent of contamination not attributable to the characteristic property itself for this enormously disparate group of wastes. See 55 FR 22654. These concerns are less apparent for debris exhibiting ignitability or reactivity, or contaminated with ignitable, corrosive or reactive wastes, because there appears to be much less of it (almost no debris could be ignitable, given that most ignitable wastes must be liquids (see § 261.21(a)(1) and (2)), none is corrosive (only liquids can be corrosive wastes), and also because a large proportion of debris would likely be contaminated with hazardous constituents because most hazardous debris comes from remediation sites. *Id.* at 985.

Most commenters opposed requiring treatment for specific hazardous contaminants. They also urged that all dilution be allowed as a form of treatment. Some commenters argued that this result was compelled by the statute. (This issue is presently awaiting decision by a panel of the District of Columbia Circuit Court of Appeals.) Others expressed concern with the practical difficulties inherent in sampling for hazardous constituents, or otherwise ascertaining their presence.

After considering the record, the Agency has decided to adopt the same treatment standards for ignitable, corrosive, or reactive (ICR) debris as for other hazardous debris because ICR debris is just as likely to be contaminated with hazardous constituents. See 55 FR 22654. (EPA will subcategorize ICR wastes and develop specific treatment standards, rather than allowing all types of dilution as treatment when a specific toxicity threat is apparent.) We are adopting a treatment standard of deactivation for these wastes but are requiring that the standard be achieved by use of the treatment methods adopted for other debris, unless the generator or treater demonstrates to the Agency that the debris does not contain toxic constituents. See discussion on codification of the contained-in principle above in Section V.B.2.b. (If necessary, petitioners could also make an equivalency demonstration under § 268.42(b) if they wish to treat by some means other than one of the methods set out in the rule.) This will result in some treatment of hazardous constituents that are present, rather than allowing simple dilution to be used. (Many treatment methods for debris involve some type of dilution, and are permissible under today's rule. The effect of today's rule is to prohibit dilution other than that occurring as a result of a designated treatment method. An example of impermissible dilution could be packing ignitable, corrosive, or reactive debris in sand.) In addition, the types of concerns voiced by the Agency in the third third rule against adopting this type of standard for all ignitable, corrosive, and reactive wastes are not present for debris. The Agency is not requiring identification of hazardous contaminants that may be present, as proposed, in part due to the practical concerns voiced by commenters, in part because the Agency is not adopting this approach for other debris, and because most of the treatment methods will provide some treatment of most if not all hazardous contaminants.

EPA is not providing the option of treating by existing treatment standards for these wastes. This is because the existing treatment standard for most ignitable, corrosive, or reactive wastes can be achieved by deactivation involving any type of dilution. Since this is the very result that the Agency is seeking to avoid, EPA is indicating in the rule that this option is not available for this one class of debris.

EPA noted at proposal that special rules would be needed for debris that is reactive due to presence of cyanide in order that cyanide by treated adequately. See 57 FR 990. We are adopting this approach in the final rule. Any such debris must therefore be treated by one of the specified technologies for which the treatment standards can be achieved for cyanide. In addition, any residues of such treatment may not be disposed until cyanide is treated to levels established in existing Table CCW of § 268.43 (the treatment standard for waste that is reactive because of cyanide). This approach is consistent with that adopted for reactive cyanide wastes in the third third rule and should ensure that the cyanide known to be present is treated adequately before land disposal.

7. Special Requirements for Inherently Hazardous Debris

The proposed rule also considered the regulatory status of debris that is itself hazardous because it is fabricated with toxic constituents. Because such debris will continue to exhibit the toxicity characteristic after treatment by an extraction or destruction technology, today's rule requires treatment by an immobilization technology to reduce the likelihood of migration of hazardous contaminants. See § 268.45(b)(4). Examples are lead pipe, or refractory brick containing chromium. See 57 FR 990. (This debris is referred to in this preamble discussion as "inherently hazardous debris".) Such debris can also be contaminated with listed wastes. In the proposed rule, the Agency discussed how the land disposal restrictions would apply if such debris were disposed of, and also indicated that an alternative for much of this debris would be to recycle it as scrap metal, in which case an existing regulatory exemption could apply. *id.* EPA also solicited comment on what standards should apply to residues from treating inherently hazardous debris, and also requested comment on whether there were situations when immobilization would not be an appropriate treatment technology for such debris. *Id.* at n. 26 and 990–91.

The Agency is essentially adopting the proposed approach in the final rule. However, some of the issues raised in the proposal require additional clarification, which is provided below.

a. *Inherently Hazardous Debris that Is Disposed.* When recycling of inherently hazardous debris is not

practicable and it is to be disposed, today's rule requires treatment by an immobilization technology to reduce the likelihood of migration of hazardous contaminants, followed by disposal in a subtitle C facility. In response to commenters' concerns about the need for size reduction for immobilization, we note that the treatment standards for macroencapsulation and sealing may be achieved in some cases without size reductions.[43]

A number of commenters questioned whether any treatment was needed to be performed on inherently hazardous debris or whether it could simply be disposed directly. The statute forecloses that option. Section 3004(m)(1) indicates that the Agency is to establish "levels or methods of treatment, if any" which substantially reduce waste toxicity and mobility and minimize threats. If there are not such methods, the situation EPA believes contemplated by the clause "if any" in section 3004(m), the waste cannot be land disposed. See section 3004 (d), (e), and (g); see also *API* v. *EPA*, 906 F. 2d 729, 738 (D.C. Cir. 1990) (use of comparative risk assessment to compare safety of treatment methods versus land disposal of untreated wastes is unnecesary given that the statute forecloses land disposal as an option). Thus, some treatment of inherently hazardous debris is needed in order for it to be land disposed. As indicated above, the Agency believes that such methods exist (i.e., immobilization).

If inherently hazardous debris is also contaminated with listed wastes, then that waste also must be treated by one of the prescribed treatment methods, the same approach adopted for all other debris. Note that the contaminants in the waste contaminating the debris need not be treated prior to immobilization of the debris if the performance standards for the immobilization technology can be achieved without such prior treatment.

Residues from treating inherently hazardous debris would not require further treatment unless the residues also exhibited a prohibited hazardous waste characteristic. However, if the inherently hazardous debris is contaminated with a listed waste, residues from treating the debris would remain subject to the numerical standards applicable to that listed waste. Furthermore, if the debris were treated first to remove or destroy the listed waste (i.e., treated by an extraction or destruction technology prescribed in today's rule) and subsequently treated again by immobilization due to its inherent content, the Agency would not consider the debris to be contaminated any longer with a listed waste, since the initial treatment would have removed or destroyed it. Thus, any residues from subsequent immobilization would not be subject to treatment standards unless those residues exhibited a characteristic. For example, if lead pipe contaminated with listed solvents was first treated to remove the solvent and then treated to immobilize the lead, only residues from removing the solvent would have to meet the numerical solvent treatment standards. This approach mirrors that adopted for all other hazardous debris.

b. *Inherently Hazardous Debris that Is Scrap Metal and Is Recycled.* EPA's rules provide for an exemption from regulation for scrap metal that is recycled. See § 261.6(a)(3)(iv); scrap metal is defined at § 261.1(c)(6). EPA consequently indicated at proposal that the land disposal prohibitions would not apply to inherently hazardous debris that was also scrap metal being recycled. EPA adheres to that approach, which simply restates current rules (and was not reopened for reconsideration). The only obligation for generators handling such scrap metal is to keep a record of the scrap and its subsequent disposition or recycling by metal reclamation. See § 268.7(a)(6). If the scrap metal is also contaminated with listed waste, the exemption continues to apply since the material would still meet the regulatory definition of scrap metal. However, any residues from processing the waste would remain hazardous by the derived from rule, and would require treatment to meet the standard for that listed waste before it could be land disposed. Thus, persons treating such scrap metal would become hazardous waste generators, and would also incur responsibilities under the land disposal restriction rules (see § 268.7(a) (1) and (2)). As explained in the previous section, however, if the scrap metal were to be treated first by a prescribed removal or destruction technology, it would no longer be considered to be contaminated with a listed waste, and any residues generated subsequently would not be hazardous wastes unless they exhibited a hazardous waste characteristic. Thus, it may be advantageous to arrange for pretreatment of contaminants before this type of scrap metal is recycled.

c. *Status of Stainless Steel Debris.* The Agency provided an example in the proposed rule of demolition of a building containing stainless steel fixtures and indicated that if a representative sample of the demolition debris exhibited a characteristic debris would be hazardous waste. The Agency noted that stainless steel could also be removed before demolition and managed separately, perhaps by recycling it as scrap metal. See 57 FR 990.

In providing this example, the Agency was not stating that discarded stainless steel artifacts are hazardous wastes, and in fact has no information indicating that such materials, much less demolition debris containing small bits of stainless steel, would exhibit a characteristic. Although it may be worthwhile (for environmental and economic reasons) to remove metal artifacts for recycling rather than destroying them when demolition occurs, today's rule does not mandate any such conduct.

8. Relationship of the TSCA PCB Rules to Today's Rule

As proposed, the final rule requires that hazardous debris that is also a waste PCB under 40 CFR part 761 must comply with both the applicable PCB requirements and today's debris treatment standards, by satisfying the more stringent applicable requirements.

The treatment standards for hazardous debris also apply to debris contaminated with both PCBs and RCRA hazardous wastes. See § 268.45(a)(5). This is consistent with the approach taken in the third third final rule. See 55 FR 22678 (June 1, 1990). Debris treated to today's performance standards by an extraction or destruction technology (and that does not exhibit a hazardous characteristic) remains subject only to TSCA rules because it is excluded from subtitle C regulation, whereas debris treated by an immobilization technology remains subject to applicable requirements under both statutes.

Under the Toxic Substances Control Act (TSCA), disposal of debris contaminated with PCBs is regulated under 40 CFR 761.60. In addition, disposal of debris and materials resulting from the cleanup of certain PCB spills is subject to the PCB Spill Cleanup Policy, as provided under 40 CFR 761.125.

9. Relationship of Existing Agency Standards for Asbestos to Today's Rule

As proposed, the Agency is today requiring that the treatment standards for hazardous debris also apply to debris subject to standards for asbestos

[43] Certainly, size reduction to that normally achieved prior to microencapsulation is not necessary.

under OSHA, TSCA, and NESHAPs.[44] EPA acknowledges that many of the treatment technologies specified in today's rule for hazardous debris would not be practicable for asbestos debris because of the potential for occupational exposure or environmental release of asbestos. However, the Agency believes that several technologies could be used to treat hazardous debris in compliance with the applicable OSHA, NESHAPs, and TSCA by using filtration devices on air and water emissions to control asbestos—water washing and spraying; liquid phase solvent extraction; vapor phase solvent extraction; biodegradation; chemical oxidation; chemical reduction; and macroencapsulation.

The Agency considered the argument made by several commenters that asbestos-contaminated hazardous debris and hazardous debris contaminated with asbestos should be managed according to existing EPA and OSHA regulations (i.e., bagging) and placing the bagged material in a subtitle C facility. The Agency agrees with the commenters that, if bagging meets the performance standard for macroencapsulation, such debris may then be disposed of in a subtitle C facility.

10. Special Requirements for Radioactive Debris

The Agency is today requiring that hazardous debris that is subject to regulations under the Atomic Energy Act (AEA) because of its radioactivity (i.e., mixed waste) is also subject to today's debris treatment standards.[45] This is consistent with the Agency's regulation of the waste that is contaminating the debris—if a prohibited waste is also a mixed waste, it is nonetheless subject to the treatment standards for the waste.

Commenters expressed concern that the treatment of certain radioactive mixed waste debris may pose an unreasonable risk to human health and the environment due to the radiological nature of the waste. The Agency understands commenters' concerns but believes that there is sufficient flexibility in the debris treatment standards to enable generators or treaters to select a technology that will effectively treat the hazardous contaminants without posing an unreasonable risk to human health and the environment because of the radiological nature of the waste.

11. Documentation of Compliance With the Treatment Standards

When hazardous debris is treated to today's treatment standards, treaters must comply with the applicable residue analysis, notification, certification, and recordkeeping and requirements of revised § 268.7. In today's rule, the Agency has revised several paragraphs in § 268.7 and added one paragraph to accommodate hazardous debris.

Paragraph (a)(1) is revised to require generators who ship their hazardous debris to a storage or treatment facility to provide a notice that includes the information already required for restricted wastes as well as a listing of the contaminants subject to treatment. This will assist the treater in determining which treatment technology is appropriate for the debris. In addition, the notice must inform the treater that the debris is subject to (i.e., eligible for) the alternative treatment standards of Table 1; § 268.45.

Paragraph (a)(2) is revised to exempt generators of hazardous debris who obtain a determination from the Agency that the debris does not contain hazardous waste (see § 261.3(e)(2)) from the notification requirements of that paragraph for facilities receiving the shipment. Given that such debris is no longer hazardous waste, the notification requirement is not necessary.

Paragraph (a)(3) is revised to require generators whose restricted hazardous debris is not yet prohibited debris (because of, for example, the capacity variance discussed in section V.G below) to provide a notice that includes the information already required for restricted wastes as well as a listing of the contaminants subject to treatment and a statement that the debris is subject to (i.e., eligible for) the alternative treatment standards of Table 1, § 268.45. See discussion above for the rationale for requiring that this additional information be submitted to the receiving facility.

Paragraph (a)(4) is revised to exempt generators who treat their debris by one of the technologies specified in Table 1, § 268.45, from the waste analysis requirements of that paragraph. As discussed elsewhere in today's notice, the debris treatment standards are technology-specified standards rather than numerical concentration standards. Thus, analysis of the debris is generally not necessary (except to determine where knowledge about the debris is not available whether the debris exhibits a characteristic of hazardous waste).

Paragraph (b)(4) is revised to exempt facilities that treat hazardous debris so that it is excluded from the definition of hazardous waste under § 261.3(e) (i.e., debris treated by an extraction or destruction technology provided by Table 1, § 268.45, and debris that the Agency has determined does not contain hazardous waste) from the notification requirements of that paragraph. Paragraph (b)(4) requires treaters of prohibited waste to notify the land disposal facility receiving each shipment of waste of information including the treatment standards applicable to the waste. We revised this requirement because notification of receiving facilities is not necessary for debris that is excluded from subtitle C regulation. We note, however, that treaters of excluded debris are subject to the new notification (to EPA) and certification requirements provided by paragraph (d), as discussed below.

Paragraph (b)(5) is revised to exempt facilities that treat hazardous debris so that it is excluded from the definition of hazardous waste under § 261.3(e) from the certification requirements of that paragraph. Such facilities are subject to the new certification requirements, however, provided by paragraph (d), as discussed below.

Finally, paragraph (d) is added to subject generators and treaters who first claim that their debris is excluded from the definition of hazardous waste under § 261.3(e) to notification and certification requirements. Such generators and treaters are required to submit to EPA a one-time notice identifying the name and address of the subtitle D facility receiving the excluded debris, a description of the debris before treatment (i.e., as-generated), and, if the debris is excluded because it was treated by an extraction or destruction technology specified in Table 1, § 268.45 (i.e., it is not excluded as a result of a contained-in determination), the treatment technology used. The Agency will use this information for enforcement purposes. Not only will the notification identify those facilities that claim that hazardous debris is excluded from regulation, but the information on the type of debris treated and the technology used will enable the Agency to establish a priority for inspections taking into account how difficult it may be to treat the debris to the performance and design and operating standards with the selected technology.

In addition, for debris treated by a technology specified in Table 1, § 268.45

[44] For a summary of OSHA, TSCA, and NESHAP controls on asbestos, see the proposed rule at 57 FR 993–994.

[45] We note that the Agency has established treatment standards in § 268.42 for several types of radioactive wastes (e.g., D008: Radioactive lead solids subcategory) that may be generated in particle sizes greater than 60 mm, the minimum size limit for debris. Nonetheless, such wastes are excluded from the definition of debris (see § 268.2(g)) and are subject to the waste-specific treatment standards.

(i.e., debris not excluded as a result of a contained-in determination), the treater must document and certify compliance with the treatment standards specified in Table 1. The rule requires the treater to record in the facility's files all inspections, evaluations, and analyses (e.g., determinations that a physical extraction technology has removed at least 0.6 cm of the debris surface and that the debris is treated to a "clean debris surface") of the treated debris that the treater made to determine compliance with the standards, as well as any data or information pertaining to key operating parameters the treater may have generated during treatment of the debris (e.g., exit gas temperature and feed rate, of a thermal desorber). The rule also requires the treater to place a certification in the facility's files for each shipment of excluded debris that the debris has been treated in accordance with the standards specified in Table 1. These requirements will enable the Agency to enforce the debris treatment standards.

D. Exclusion of Hazardous Debris From Subtitle C Regulation

Under today's rule, hazardous debris may be excluded from subtitle C regulation either by: (1) the Agency's determination that the debris no longer contains hazardous waste (i.e., the contained-in policy discussed in section V.B.2) as provided by new § 261.3(e) (2); or (2) by compliance with the debris treatment standards for extraction or destruction technologies for exclusion from subtitle C provided in Table 1 of § 268.45 (and provided the debris does not exhibit a hazardous characteristic after treatment). The basis for excluding debris determined to no longer contain hazardous waste is discussed above in section V.B.2. We discuss here the basis for excluding from subtitle C regulation debris that is treated to meet today's performance standards requisite to such exclusion.

1. Basis for Excluding Debris Treated by Extraction or Destruction Technologies and That Is Not Characteristic

Debris treated by a prescribed extraction or destruction technology and that does not exhibit a hazardous characteristic is excluded from subtitle C regulation. As discussed in section V.C.5 above, the Agency has given careful consideration as to whether each debris/contaminant type would be effectively treated by each BDAT technology to levels that present minimum risk (i.e., would no longer pose a hazard to human health or the environment). The Agency believes that debris treated to those standards would pose minimum risk for a number of reasons. First, the Agency has deleted two technologies (i.e., electropolishing and ultraviolet radiation) from the proposed list of BDAT technologies because they are not likely to provide effective treatment. Second, the final rule requires separation of nonempty intact containers of hazardous waste from debris for treatment to the waste-specific treatment standards. Thus, containerized waste that is readily amenable to separation from debris by equipment operators in the field and that may have high concentrations of toxic constituents will be subject to concentration-based, waste-specific treatment standards rather than to the debris standards. Third, the final rule raises the particle size used to define debris from 9.5 mm to 60 mm and applies the size limit to all debris, not just geologic matter. Thus, materials that should be amenable to treatment methods for process waste are subject to the waste-specific treatment standards rather than to the debris standards. Fourth, the final rule specifically excludes process waste of any particle size (e.g., slag) from the definition of debris. Thus, process wastes with potentially high concentrations of hazardous constituents will be subject to the waste-specific treatment standards rather than to the debris standards.

Most important, the performance and design and operating standards that the rule establishes for exclusion of treated debris from subtitle C are rigorous standards. Examples are the requirements that physical extraction technologies treat metal to a "clean metal finish" and other debris surfaces to a "clean debris surface". A minimum of 0.6 cm of the surface layer of porous debris must be removed as well. Another example is the maximum thickness standard for porous debris that is to be treated by chemical extraction.

For several technologies, the Agency was concerned that the performance and design and operating standards may not ensure treatment to minimum risk levels. Consequently for these technologies—thermal desorption, biodegradation, chemical oxidation and reduction and thermal destruction of debris contaminated with dioxin-listed wasted [46]—treated debris would be excluded only after the treater successfully makes an equivalent technology demonstration to the Agency under § 268.42(b) documenting that the technology treats a particular type of debris/contaminant combination as effectively as the other BDAT technologies to residual levels of hazardous contaminants that would not pose a hazard to human health and the environment absent management controls.

Finally, the rule requires separation of the treated debris from all treatment residues, including soil, waste, or other nondebris material that could remain adhered to the debris surface. This will ensure that metal contaminants in the residue will not continue to contaminate the treated debris and that any waste or contaminated soil in a primarily debris mixture as it was generated is separated from the treated debris prior to exclusion from subtitle C.

The philosophy underlying this approach is similar to that contained in principle: It is not normally the debris itself that is hazardous, but rather hazardous waste that is contaminating the debris. Thus, the goal of treatment should be to destroy or remove the contamination (if possible) and if this is achieved, to dispose of the cleaned debris as a nonhazardous waste. The removed residues from this treatment contain the contamination, and must meet numerical concentration levels before they can be land disposed.

Not only are the treatment methods developed to achieve this objective, but the various separation requirements (both before and after treatment) forcing removal of all nondebris materials such as soil and other wastes, and the definition of debris itself (which limits the debris classification to materials most amenable to the treatment methods, and classifies materials most amenable to meaningful sampling as nondebris subject to numerical treatment standards) are intended to achieve the same goal. As discussed above, the debris treatment standards are written wherever possible as performance standards to ensure that contamination is in fact removed from the debris. In addition, the rule specifies which contaminants are unsuitable for certain of the treatment methods. In short, the Agency believes that treatment of contaminated debris by the methods established here will result in clean debris which may then be land disposed, and should also no longer be regulated as a hazardous waste.

EPA notes, however, that the notion of excluding wastes from subtitle C regulation without sampling for hazardous constituent concentration levels is potentially at odds with many of the approaches recently proposed for public comment in the Hazardous Waste

[46] Note that the standards provide other restrictions for debris contaminated with dioxin-listed waste.

Identification Rule (HWIR). See 57 FR (May 20, 1992). In that rule, the Agency asked for comment on means of identifying and excluding hazardous wastes from subtitle C regulation that potentially take into account presence of a majority of the hazardous constituents listed in appendix VIII of part 261. If these approaches are adopted, they could provide a principled means of evaluating wastes heretofore excluded from subtitle C regulation without requiring analysis of hazardous constituent concentrations, such as the debris being excluded in today's rule, or residues from "empty containers" discussed above in Section V.B.2. EPA expects that hazardous constituent levels in debris treated by the methods adopted today will be consistent with levels resulting from the May 20 proposal, and in addition, for many types of treated debris there remain difficulties in obtaining representative samples necessary to make hazardous waste identification and listing determinations, and for this reason is finalizing the rule today rather than delaying action pending the results of the May 20 rulemaking. Nevertheless, the Agency believes it an appropriate issue for comment in the HWIR rulemaking the extent to which those standards should be used to replace exclusions from the definition of hazardous waste that are established without requiring analysis of hazardous constituent levels in the excluded waste.

2. Rationale for Continued Subtitle C Regulation of Debris Treated by Immobilization

Debris treated by an immobilization technology would remain subject to subtitle C regulation. EPA currently has insufficient data to demonstrate generically that debris which can be contaminated with both organic and inorganic constituents would be nonhazardous when treated by any of the immobilization technologies. Until the Agency gathers further data, EPA is concerned that, absent subsequent subtitle C management, hazardous contaminants may migrate from certain immobilized debris at levels that could pose a hazard to human health and the environment. Thus, EPA believes it inappropriate to promulgate a self-implementing exclusion at this time. Nonetheless, in the Phase II land disposal restrictions rule, the Agency will reopen and request comment on the issue of whether immobilized debris should be excluded from subtitle C regulation. The Agency plans to investigate this issue further and will publish in the Phase II proposed rule any information or data that are available. In addition, the Agency will specifically explore the potential of using the TCLP, and if so, under what circumstances, in determining whether immobilized hazardous debris should be excluded from subtitle C control. To assist the Agency in this effort, we ask for data on the performance of specific immobilization technologies and short- or long-term leachibility studies. Based on past experiences, the Agency has found that uncertainty over the technical performance of immobilization precludes a general exemption from subtitle C for all types of immobilized hazardous debris. However, the Agency will continue to evaluate all available and new information about the performance of immobilization technologies which could limit the technical uncertainty. To the extent that sufficient information that meets proper quality assurance/quality control procedures is available, the Agency plans to propose in the Phase II LDR rule an exclusion from subtitle C for those immobilized hazardous debris.

E. Regulation of Treatment Residuals

1. Overview

In this section, we discuss: (1) The rationale for subjecting treatment residues to the waste-specific treatment standards for the waste contaminating the debris; (2) separation of treated debris from treatment residue; (3) special requirements for debris treated by spalling; (4) special requirements for residue from the treatment of debris contaminated with cyanide reactive waste; and (5) special requirements for ignitable wastewater residue.

2. Treatment Residues Are Subject to the Waste-Specific Treatment Standards for the Waste Contaminating the Debris

Residuals from the treatment of hazardous debris are subject to the waste-specific treatment standards for the waste contaminating the debris. The residual must be treated to those standards for all BDAT constituents specified in §§ 268.41, 268.42 and 268.43 for the waste.

The Agency had proposed to require treatment of nonsoil residuals to the multi-source leachate F039 levels and soil residuals to the waste-specific treatment standards for the waste contaminating the debris. Based on public comment and the Agency's re-evaluation of this issue, the Agency had determined that it is more appropriate to subject all treatment residues—soil, wastewater, and nonwastewater—to the waste-specific treatment standards for the waste contaminating the debris for a number of reasons. First, the waste-specific treatment standards currently apply to treatment residuals, and the Agency does not know of a compelling reason to change that position. Second, requiring compliance with the waste-specific treatment standards rather than the F039 standards may be somewhat easier to understand and implement because the treatment standards for the BDAT constituents in the residue can be determined at the same time that the BDAT constituents are identified as contaminants subject to treatment (i.e., the contaminants subject to treatment in the contaminated debris are the same contaminants that must be treated in treatment residuals). Third, the Agency is considering simplifying and revising the treatment standards for all prohibited waste to "universal standards" in the Phase II proposed land disposal restrictions rule.

Several commenters suggested that the thermal destruction process of vitrification should be considered immobilization of debris. Thus, commenters argued that such vitrified debris could be land disposed under subtitle C without being subject to the waste-specific treatment standards for the waste contaminating the debris. The Agency disagrees with this view. Vitrification is a type of thermal destruction that produces a residue that is vitrified. Thus, the vitrified residue is subject to the same treatment standards as any debris treatment residue—the waste-specific standards for the waste contaminating the debris. This is consistent with the Agency's position that slag from high temperature metals recovery is residue, not debris, subject to the waste-specific treatment standards.

3. Treated Debris Mixed With Treatment Residue Is Subject to Regulation as Residue

As discussed above in section V.C.5, treatment residues generally contain high levels of toxic contaminants removed from the debris. Examples are residue from thermal desorption or incineration of debris contaminated with metal-bearing waste, and residue from water washing of debris. As discussed below, treatment residuals are subject to the waste-specific treatment standards for the waste contaminating the debris. Thus, to ensure that treatment residuals are treated effectively before land disposal and to ensure that treated debris is not contaminated with the treatment residue, the treatment standards require that the treated debris must be separated from the treatment residue. If the debris is not separated from the

treatment residue, it remains a prohibited waste and may not be land disposed. It also remains subject to all other subtitle C standards.

The Agency defines treatment residuals as residuals such as biomass from biodegradation and ash from incineration as well as soil, waste, or other nondebris material that may remain adhered to the treated debris. We note further that slag from a high temperature metals recovery furnace and vitrified residue from a thermal destruction unit are treatment residues rather than debris. In both cases, the original debris no longer exists and the residuals from soil or waste contaminating the debris are integral components of the slag and vitrified residue.

Separation of the treated debris from treatment residuals must be accomplished using simple physical or mechanical means such as vibratory or trommel screens or water washing. The separation process need not produce a "clean debris surface" [47] as discussed above, however; rather the debris surface must be free of caked residuals or nondebris materials such as soil or waste. For example, thermal desorption debris need not be water washed after trommel screening to remove dust from residuals or nondebris material. (Note that the use of water washing to separate thermally desorbed debris from residuals and nondebris materials need not comply with the treatment standards for water washing (e.g., treatment to a "clean debris surface") because the debris has already been treated by an alternative technology.)

4. Special Requirements for Debris Treated by Spalling

As proposed and as discussed in Section V.C.5, debris removed by spalling remains debris subject to the debris treatment standards. Debris surfaces removed by spalling are, by definition of the technology, large pieces of debris. The Agency believes that such pieces of spalled debris are more debris-like than waste or residual-like and are more amenable to treatment by the debris treatment standards than the waste-specific treatment standards.

[47] "Clean debris surface" means the surface, when viewed without magnification, shall be free of all visible contaminated soil and hazardous waste, except that residual staining consisting of light shadows, slight streaks, or minor discolorations, and soil and waste in cracks, crevices, and pits may be present provided that such staining and soil and waste in cracks, crevices, and pits shall be limited to no more than 5% of each square inch of surface area.

5. Special Requirements for Residue From the Treatment of Debris That Is Cyanide-Reactive

As proposed, the final rule requires that residues from the treatment of debris that is reactive because of cyanide is subject to the waste-specific treatment standards for cyanide under § 268.43. As with cyanide-reactive waste, EPA believes that BDAT for cyanide-reactive debris requires treatment of cyanide because of its toxicity.

6. Special Requirements for Ignitable Nonwastewater Residue

As proposed, the final rule requires that ignitable nonwastewater residue containing greater than or equal to 10% total organic carbon be subject to the technology-based standards for D001: "Ignitable Liquids based on 261.21(a)(1)" under § 268.42. This residue must be treated by fuel substitution (i.e., burning as fuel in a boiler or industrial furnace), recovery of organic constituents (e.g., distillation, carbon adsorption), or incineration. EPA has established these technologies as BDAT for high total organic carbon ignitable liquids because they will effectively remove or destroy the toxic organic constituents.

F. Permit Requirements for Treatment Facilities

Treatment of hazardous debris (except as discussed below for 90-day on-site treatment in a container, tank, or containment building) is currently subject to the applicable interim status and permit standards of parts 264, 265, 266, and 270 that ensure protection of human health and the environment from the operation of the treatment unit. (We note that, for containment buildings, interim status and permit standards and requirements for 90-day on-site treatment are promulgated in today's rule as discussed elsewhere in this notice.) Today's debris treatment standards to implement the land disposal restrictions of section 3004(m) of the statute do not affect those existing facility standards. For example, today's treatment standards do not reopen interim status eligibility for debris treatment facilities. (We note, however, that today's rule does establish the interim status eligibility date for containment buildings given that these units are newly regulated by this rule, assuming that such buildings are located at facilities containing no other regulated units.) Rather, today's debris treatment standards subject generators and treaters to additional requirements to ensure effective treatment of hazardous debris prior to exclusion from subtitle C (for debris treated by an extraction or destruction technology and that does not exhibit a hazardous characteristic) or land disposal in a subtitle C facility (for debris treated by an immobilization technology).

As information for the reader, we note that the existing facility standards for the following common debris treatment operations (other than for 90-day on-site treatment in a container, tank, or containment building) are:

- Debris treatment technologies conducted in tanks such as high pressure steam and water spraying, chemical extraction, and biodegradation are subject to the standards for tank facilities in subpart J of part 264 (permit standards) and part 265 (interim status standards).
- Storage or treatment in containment buildings is subject to the subpart DD, parts 264 and 265, standards also promulgated today (see discussion elsewhere in today's notice).
- Physical extraction technologies such as abrasive blasting or spalling used to treat debris in place but that is intended for discard (e.g., treatment of a contaminated building prior to demolition) are subject to the permit standards of subpart X, part 264 for miscellaneous units or the interim status standards for chemical, physical, or biological treatment in subpart Q, part 265.
- Incinerators are subject to subpart O, part 264 (permit standards) and part 265 (interim status standards).
- High temperature metal recovery furnaces are conditionally exempt from the rules for boilers and industrial furnaces burning hazardous waste in subpart H, part 266.
- Thermal desorbers are subject either to the incinerator or thermal treatment standards, depending on whether the unit meets the incinerator definition. Thermal treatment units are subject to subpart X, part 264 (permit standards for miscellaneous units) and subpart P, part 265 (interim status standards).

1. Adding Capacity for Debris Treatment to Existing Facilities

Today's rule amends the permit and interim status standards of part 270, as proposed, to facilitate the expansion of existing debris treatment capacity and the addition of new debris treatment capacity at existing facilities currently subject either to permit or interim status standards for managing hazardous waste. However, if an owner or operator of a facility that is not currently managing hazardous waste under the permit or interim status standards wants

to construct a debris treatment facility, he must first obtain a RCRA permit.

a. *Facilities With a RCA Permit.* Facilities with a RCRA permit may add new treatment processes and additional capacity by applying for a permit modification under § 270.42. See 53 FR 37912 (Sept. 28, 1988). Although regulations at § 270.42 were promulgated under pre-HSWA authority, EPA may use these regulations in authorized States when necessary to implement HSWA provisions such as the land disposal restrictions. See 53 FR 37933.

The types of modifications needed to add new capacity or processes would likely require submittal of a Class 2 or 3 modification. The Class 2 modification process requires Agency action on the request within 120 days. This action would consist of approval or denial, reclassification as a Class 3 modification, or authorization to conduct activities (in containers, tanks, and containment buildings, as discussed below) for up to 180 days pending Agency action. Further, for Class 2 modifications, construction to implement the requested facility change may commence 60 days after submission of the request. There is no deadline for Agency action for Class 3 modifications, which apply to more substantial changes.

Permitted facilities may apply under existing § 270.42(e)(3)(ii)(B) for a temporary authorization to initiate necessary activities to treat or store restricted wastes (e.g., hazardous debris) in tanks or containers while a Class 2 or 3 permit modification is undergoing review, or to undertake a treatment or storage activity which will be of short duration (e.g., decontamination of a building intended for demolition). Today's rule revises that section to enable the Agency also to grant a temporary authorization for containment buildings meeting the requirements promulgated today in subpart DD of parts 264 and 265.

Any request for a temporary authorization must demonstrate compliance with the part 264 standards and also meet the criteria of § 270.42(e) for approval. Interested members of the public (i.e., those that have previously expressed interest in any permitting action for the facility) will receive notice by mail of a facility's request for a temporary authorization. The temporary authorization may be renewed once if the additional procedures of § 270.42(e) are followed, including submission of appropriate permit modification information and the initiation of public meetings and public comment period. See 53 FR 37919.

b. *Facilities Operating Under Interim Status.* Facilities managing hazardous waste under interim status may add new treatment processes or additional treatment or storage capacity by using the existing procedures for changes during interim status in § 270.72. Under these procedures, a facility must submit to EPA a revised Part A permit application and justification explaining the need for the change. The change must then be approved by EPA.

Such changes must meet one of several criteria specified in § 270.72, such as being necessary to comply with a Federal, State, or local requirement. However, changes generally may not be made if they amount to reconstruction of the facility. The Agency considers the facility to be "reconstructed" if the capital investment for the changes to the facility exceed 50% of the capital cost of a comparable entirely new facility.

Existing § 270.72(b)(6) lifted the reconstruction limit for changes to treat or store in tanks and containers hazardous waste subject to land disposal restrictions imposed by part 268, provided that such changes are made solely for the purpose of complying with part 268 land disposal restrictions. Today's rule revises that paragraph to lift the reconstruction limit for containment buildings as well. See the the new subpart DD, part 264 and 265, standards for containment buildings that are also promulgated today.

2. On-Site Treatment of Debris in Containers, Tanks, and Containment Buildings

Existing § 262.34 exempts from permit requirements generators who store or treat hazardous debris on-site in tanks or containers for a period not exceeding 90 days provided that the tank or container is designed and operated in compliance with subpart I (for containers) and subpart J (for tanks) of part 265. Today's rule revises § 262.34, as proposed, to also provide this exemption to containment buildings designed and operated in compliance with the subpart DD, part 265, standards also promulgated today.

G. Capacity Variance for Hazardous Debris

In the May 15, 1992, Notice to Approve Hazardous Debris Case-By-Case Capacity Variance, the Agency approved a generic, one year extension of the LDR effective date applicable to all persons managing hazardous debris (57 FR 20766). For the purpose of the extension, the term "debris" was defined as set out in the preamble to the June 1, 1990 Third Third final rule. See 55 FR 22650 and § 268.2(g). Furthermore, the Agency indicated that it will explain in the debris rule how a change in definition will affect the case-by-case extensions.

Although in general, both definitions will identify the same materials as debris, there are differences that may result in situations where either definition could include debris not included by the other. Of concern is the situation where someone has entered into contracts for, or actually initiated the process of, removing for disposal debris which met the old definition but does not meet the current definition. To avoid possible disruption of on-going activities, which have relied on the previous definition of debris, the Agency will allow the extension to apply to materials meeting either definition through May 8, 1993.

H. Other Issues

1. Applicability of Standards to Contaminated Structures and Equipment

a. *Structures and Equipment Contaminated With Hazardous Waste and Intended for Discard Are Regulated Debris.* As discussed above in section V.B.1.a of the preamble, structures and equipment contaminated with hazardous waste and that are intended for discard are hazardous debris subject to today's treatment standards. Thus, if a contaminated tank or building is decontaminated before demolition, the debris may not be land disposed unless the tank or building was decontaminated in compliance with today's treatment standards. (We note that, as discussed above in section F.2, such treatment is subject to the permit standards unless conducted in a tank, container, or containment building.)

If the contaminated structure or equipment is being decontaminated for subsequent use, however, the structure or equipment is not debris and the decontamination is neither subject to today's debris treatment standards nor the permit standards for hazardous waste management facilities. Thus, cleaning a building that is in use is not treatment of debris.

b. *Treatment Standards for Concrete Pads and Walls Intended for Discard.* The Agency believes that concrete pads and walls are typically decontaminated using "water washing" techniques. These techniques include the following technologies specified in today's rule: Abrasive blasting using water to propel abrasive media, high pressure steam or water sprays, and water washing and spraying.

We note that the performance standards for abrasive blasting and high

pressure water sprays require removal of 0.6 cm of the surface because these are physical extraction technologies designed to remove the surface layer of the debris. The performance standards for water washing and spraying limits the thickness of the concrete to 3/8 inch because this technology relies on chemical extraction (i.e., dissolving or removing with surfactants) of contaminants below the concrete surface. If the treater believes that treatment to these performance standards is not necessary to ensure effective treatment to residual levels of hazardous constituents that will not pose a hazard to human health and the environment absent management controls, the treater may: (1) Obtain a waiver of the standards (e.g., the thickness limit for water washing) under an equivalent technology demonstration under § 268.42(b); or (2) demonstrate to the Agency that the debris upon alternative treatment does not contain toxic constituents under the contained-in principle codified in today's rule. See discussion in section V.B.2.b above.

c. *Relation of Debris Standards to Closure Rules.* Existing closure standards for hazardous waste management facilities require "decontamination" of contaminated structures and equipment. See, e.g., §§ 264.114 and 265.114. The precise meaning of decontamination presently is determined on a case-by-case basis through review of the facility's closure plan. However, if such structures or equipment is also debris which is going to be land disposed, which could often be the case, an issue arises regarding the relationship of the "decontamination" standard in the closure rule and the treatment methods adopted in today's rule.

The Agency believes that the treatment methods in today's rule would always satisfy the decontamination standard in the closure provisions. After all, the purpose of these treatment methods is to decontaminate. EPA also interprets the land disposal and closure rules to require that all hazardous debris be treated to meet the debris treatment standards, even if the debris is generated during closure. (Put another way, the debris standards normally would be appropriate for any debris generated as a result of closure.)

If the debris treatment standards appear to be inappropriate for debris (such as contaminated structures or equipment) generated during closure, a site-specific treatability variance pursuant to § 268.44(h) may be available. The Agency believes that such a variance could be processed administratively as part of the closure procedures.

2. Mixing of Hazardous Waste or Contaminated Soil With Debris To Avoid the Waste-Specific Treatment Standards Is Prohibited

Today's rule prohibits the intentional mixing of hazardous waste or contaminated soil with debris to avoid the concentration-based treatment standards for the waste or soil. The Agency is prohibiting such sham mixing to ensure that hazardous waste and contaminated soil are treated to the existing treatment standards given that the waste [48] is amenable to treatment to those levels and that the waste and soil are likely to be much more heavily contaminated with hazardous constituents than debris and, thus, should be subject to such concentration-based treatment levels.

The prohibition on mixing applies to debris treated by any technology: Immobilization as well as extraction or destruction. Although the debris treatment standards require separation of the waste or contaminated soil from debris treated by an extraction or destruction technology and that the residue must meet the waste-specific treatment standards for the waste contaminating the debris, the treatment process itself could enable the residue to meet the concentration-based waste treatment standards by virtue of dilution during treatment. An example is water washing of debris intentionally mixed with a prohibited listed waste. The water residue may easily meet the waste-specific treatment standard by virtue of dilution rather than treatment.

We note that this prohibition on sham mixing does not affect implementation of the principle discussed above in section V.B.1 to classifying mixtures of debris with contaminated soil or waste as debris. That principle says that if debris is the primary material in a mixture by volume based on visual observation, the mixture is subject to regulation as debris. Thus, for example, when debris is initially excavated in a mixture of debris and nondebris materials, and debris is the primary material present, the mixture is appropriately regulated as debris and sham mixing has not occurred. However, if debris is intentionally mixed with contaminated soil or hazardous waste (e.g., after excavation), and the mixture is regulated as debris by the application of the mixture principle and subsequently immobilized, prohibited sham mixing has occurred.

3. Procedures for Demonstrating Equivalency of Alternative Technologies

As discussed at proposal, existing § 268.43(b) provides the generator or treater an opportunity to demonstrate to the Agency than an alternative technology can achieve the equivalent level of performance as that of the specified treatment method. We note that this variance procedure can also be used to demonstrate that one of the technologies specified in today's rule can be designed or operated under conditions other than those established in Table 1, § 268.45, to provide equivalent treatment (i.e., meet the performance standard for the technology) or that a specified technology can treat hazardous contaminants to levels that do not pose a hazard to human health and the environment absent subtitle C control without achieving the performance and design and operating standards established in Table 1.

In addition, the Agency is requiring in the treatment standards of Table 1, § 268.45, that treaters must make an Equivalency Demonstration under § 268.43(b) in order for certain technologies to be considered BDAT. See discussion above for thermal desorption, biodegradation, and chemical destruction.

VI. Capacity Determinations

This section presents the data sources, methodology, and results of EPA's capacity analysis for today's newly listed wastes. Specifically, section VI summarizes the results of the capacity analysis for petroleum refining wastes and other organic wastes; wastes mixed with radioactive contaminants; and debris contaminated with the newly listed wastes. Soil and debris contaminated with newly listed wastes for which standards are finalized today will be addressed in future proposals.

The capacity analysis for the newly listed wastes for which the Agency is today promulgating treatment standards relied on information obtained from several sources. Primary data sources include the National Survey of Hazardous Waste Treatment, Storage, Disposal, and Recycling Facilities (the TSDR Survey), the National Survey of Hazardous Waste Generators (the Generator Survey), data received in response to the proposed rule (57 FR 957), data received in response to the ANPRM for the Newly Identified and

[48] We note that the Agency is concerned that the waste treatment standards may not be appropriate for soil contaminated with the waste and, consequently is considering proposing in summer 1992 treatment standards for contaminated soil.

Listed Wastes (56 FR 24444), data received in voluntary data submissions, and information requests authorized under section 3007 of RCRA.

EPA conducted the TSDR Survey during 1987 and 1988 to obtain comprehensive data on the nation's capacity for managing hazardous waste and on the quantities of hazardous waste being land disposed. For the capacity analysis, EPA used the TSDR Survey information on the quantities of waste streams managed in land-disposal units and requiring alternative treatment/recovery due to the land disposal restrictions and on available capacity of hazardous waste management technologies.

EPA conducted the Generator Survey in 1987. This survey requested information on waste quantities and waste characteristics of hazardous waste generated, and provided capacity information for facilities not included in the TSDR Survey.

A. Capacity Analysis Results Summary

Table VI.A.1 lists each waste code for which EPA is finalizing LDR standards today. For each code, this table indicates whether EPA is granting a national capacity variance for surface-disposed or deepwell disposed wastes. As indicated in this table, the Agency is granting two-year national capacity variances only for petroleum refining wastes generated as a result of cleanouts or closures of surface impoundments, debris contaminated with newly listed wastes, and mixed radioactive wastes. EPA is granting a one-year national capacity variance for routinely-generated petroleum refining wastes. EPA is also granting a 3-month national capacity variance, extending the effective date to November 9, 1992, for compliance with the treatment standards for all newly regulated waste codes, F001–F005 revised treatment standards, converted wastewater standards that had been based on scrubber water, and the HTMR generic exclusion standards. This extension would not apply to wastes with a specified longer national capacity variance. EPA is delaying the effective date for all newly regulated waste codes because the Agency realizes that even where data indicate that sufficient treatment capacity exists, it is not immediately available. Additional time may be required to determine what compliance entails, redesign tracking documents, possibly adjust facility operations, and possibly segregate wastestreams which heretofore had been centrally treated. EPA believes these legitimate delays are encompassable within a short-term capacity variance because part of the notion of available capacity is the ability to get wastes to the treatment capacity in a lawful manner. The Agency is dating this capacity extension from November 9, 1992, rather than date of signature due to unanticipated delays in the publication of this rule in the **Federal Register**.

TABLE VI.A.1.—SUMMARY OF CAPACITY VARIANCE DECISIONS FOR NEWLY LISTED WASTES

Waste code	Variance for surface-disposed wastes?	Variance for deepwell-disposed wastes?
F037—removed from S.I.*	2-year	No.
F038—removed from S.I.*	2-year	No.
F037—managed in S.I.[b]	2-year	No.
F038—managed in S.I.[b]	2-year	No.
F037—Routine	1-year	No.
F038—Routine	1-year	No.
K107	No	No.
K108	No	No.
K109	No	No.
K110	No	No.
K111	No	No.
K112	No	No.
K117	No	2-year.
K118	No	2-year.
K123	No	No.
K124	No	No.
K125	No	No.
K126	No	No.
K131	No	2-year.
K132	No	2-year.
K136	No	No.
U328	No	No.
U353	No	No.
U359	No	No.
Mixed Rad. Waste	2-year	No
Hazardous Debris	2-year	No.

* F037 and F038 wastes from cleanout and closure of surface impoundments.
[b] F037 and F038 managed in surface impoundments.

B. Available Capacity

The analysis of commercial capacity for newly listed wastes is based primarily on data from the TSDR Survey capacity data set, data received in response to previous LDR notices and regulations, and data received in voluntary data submissions. Analysis of data from these sources indicates that sufficient commercial capacity is currently available for newly identified wastes requiring wastewater treatment, stabilization, and combustion of liquids with exception of deepwell injected K117, K118, K131 and K132. However, commercial capacity for combustion of sludges, solids, and debris is limited for some newly identified wastes. The analysis of commercial combustion capacity discussed in this section focuses on F037 and F038 sludges and solids because these wastes represent the majority of the waste volumes affected by today's rule. Specific capacity issues for the newly listed K and U wastes being regulated today are discussed in section VI.C.2 of this preamble. Debris is amenable to some, but not all types of sludge and solid combustion capacity, and is discussed in greater detail in section VI.E. Table VI.B.1 summarizes available commercial

treatment capacity for newly listed wastes.

EPA's analysis of commercial combustion capacity for sludges and solids has historically focused on the broad capacity categories of liquids, sludges, and solids. Several commenters felt that these capacity categories do not adequately represent the diversity of combustion systems included in each category. Therefore, to improve the precision of its combustion capacity analysis, EPA has divided sludge/solid combustion capacity into seven categories. EPA's capacity analysis for fixed site commercial hazardous waste incinerators separately addresses capacity from pumpable sludge, nonpumpable sludge, containerized solid, and bulk solid feed systems. EPA's capacity analysis for cement kilns that burn hazardous wastes as fuel separately addresses capacity from sludge, containerized solid, and dry solid feed systems.

EPA recognizes that this type of categorization is increasingly important as the commercial combustion industry matures and firms employ different combustion and fuel substitution technologies (i.e., cement kilns) to accommodate different types of wastes entering the commercial market. EPA also recognizes that individual feed system capacity constraints must also be consistent with overall system capacity constraints, such as heat release from a kiln. The relationship between overall system constraints and individual feed system constraints is complicated by the fact that, within the overall system limits, limits for one type of feed system (e.g., containerized solids) may be raised by reducing the amount of another type of feed (e.g., bulk solids). EPA emphasizes that its capacity analysis is conducted on a national level, and that though the Agency speaks generally about which systems are more likely to be used for newly identified petroleum refining wastes, this rule does not preclude these wastes from going through other systems.

TABLE VI.B.1.—AVAILABLE COMMERCIAL TREATMENT CAPACITY FOR NEWLY LISTED WASTES

Technology	Available capacity (Tons/year)
Biological Treatment	188,000
Chemical Precipitation	813,000
Combustion of Liquids	526,000
Combustion of Sludges and Solids	
Cement Kilns: Sludges	14,000
Cement Kilns: Containerized Solids	83,000
Cement Kilns: Dry Solids	24,000
Incineration: Pumpable Sludges	51,000
Incineration: Nonpumpable Sludges	1,000
Incineration: Containerized Solids	41,000
Incineration: Bulk Solids	23,000
Stabilization	1,204,000

This section discusses EPA's assessment of capacity in each of the seven categories, the waste characteristics that affect whether a waste is generally amenable to the category, and pretreatment processing that is generally required. A comparison of available and required capacity for F037 and F038 sludges and solids can be found in section VI.C.

I. Incineration Capacity

In response to the proposed rule, EPA received comments relating to the high demand for incineration capacity and a general shortage of incineration capacity. However, EPA's analysis of detailed data from specific incinerators revealed that there is some commercial incineration capacity available. One commenter remarked that incinerators have less capacity for high BTU wastes. EPA recognizes that the heating value of a waste affects an incinerator's throughput capacity for the waste when the incinerator is constrained by its heat input to the unit (e.g., if an incinerator is limited to 10 million BTU/hr, it could either feed 10,000 lb/hr of waste with a heating value of 1,000 BTU per pound or 5,000 pounds per hour of a waste with a heating value of 2,000 BTU per pound). EPA believes that wastes with heating values above about 5,000 BTU per pound will increasingly be sent to cement kilns for use as fuel. This issue is particularly important for bulk solid systems that are designed for soils, which have very low heating values. To the extent that mass throughput limits are based on the incinerators heat release limits, using mass throughput estimates (e.g., for bulk solids) based on large amounts of soil in the feed mix, could overestimate the mass throughput capacity for wastes with higher heating values than soil, such as F037 and F038. For this reason, EPA has revised its capacity estimate for certain incinerators whose estimates in the proposed rule were based on a waste feed blend with a very low heating value. EPA believes that a significant portion of routinely generated F037 and F038, and an even larger portion of F037 and F038 from surface impoundment cleanouts, will require incineration (as opposed to cement kiln) capacity.

EPA has identified 51,000 tons per year of pumpable sludge capacity available at incinerators. Pumpable sludge systems rely on wastes with sufficient liquid content to facilitate the flow of materials. Pumpable sludge systems use direct injection, sludge lances, positive displacement pumps and cement pumps to feed sludges to the incinerator. EPA is aware of at least one facility processing K048–K052 in this manner. In general, F037 and F038 would have to be reslurried, or would have to bypass dewatering at the point of generation to be handled through pumpable sludge systems. The primary constraints on use of this capacity for F037 and F038 are the viscosity, particle size, ash content, and abrasiveness of the sludges. Therefore, EPA does not believe that pumpable sludge systems will receive a large portion of the nation's F037 and F038 waste streams, because of the problems discussed above. Additional technical developments and operational experience are needed to allow these systems to routinely handle F037 and F038 wastes. Based on EPA's experience observing the progress at commercial combustion facilities, EPA believes obtaining permit modifications and developing the technical and operational experience to routinely handle new wastes will take six to twelve months.

EPA has identified 1,000 tons per year of nonpumpable sludge capacity available at incinerators. Nonpumpable sludge systems use ram feed systems to feed sludges to the incinerator. Wastes fed in this manner are limited by extremely high or low BTU, tramp object size, and the presence of free liquids. The primary constraints are overall availability, aggravated by generally high maintenance requirements. Again, EPA does not believe that nonpumpable sludge systems will receive a large portion of the nation's F037 and F038 waste streams because there are few of them and they will require time to develop the technical and operational experience needed to handle routinely-generated F037 and F038 petroleum refining wastes.

EPA has identified 34,000 tons per year of containerized solids capacity available at incinerators. Containerized solids systems use ram, elevator or drop feed systems to feed metal drums and fiber packs to incinerators. Metal drum systems generally require shredders. Wastes appropriate for this capacity are limited by water content and high or low BTU extremes. Utilization of this

capacity depends on wastes being packaged into drums, which is technically feasible, but systems for packaging petroleum refining wastes for incinerators are not widely available. Containerization capacity could be added at generators, incinerators or intermediate processors. EPA believes obtaining storage and operating permits, as well as construction and startup of packaging units will take six months to one year. Therefore, EPA believes that containerized solids systems will not receive a large portion of the nation's F037 and F038 waste streams because of the time needed to bring these systems on line and operate them routinely on petroleum refining wastes F037 and F038.

EPA has identified 23,000 tons per year of bulk solids capacity available at incinerators. Bulk solids systems generally use clamshell cranes or drop feed systems (possibly with shredders) to feed bulk solids into incinerators. EPA is aware of four incinerators currently burning petroleum refining wastes as bulk solids. The primary constraints on the bulk solids system are extremes of high and low BTU, object size, abrasiveness, the presence of free liquids, high system maintenance and limited number of installed systems. F037 and F038 would have to be dewatered in order to be amenable to this type of capacity. The ability for bulk solids feed systems to process large quantities of wastes directly from roll-off bins makes bulk solids capacity the most suitable for petroleum refining wastes with low to moderate BTU values.

Much of the nation's bulk solids incineration capacity has come on line fairly recently and continues to face some technical and regulatory obstacles. Two of the incinerators that provide bulk solids capacity have entered that market in the past year, and another is still modifying its system to bring its actual throughput capacity closer to its design capacity. Historical experience with new commercial incineration capacity and the unique technical challenges posed by bulk solids feed systems make commissioning and maintaining new commercial bulk solids incineration capacity highly uncertain. Based on the uncertainty of final permit approval, EPA revised its capacity estimates to exclude an incinerator which has not yet received final approval to continue full operation and needs a permit modification for F037 and F038 wastes. EPA estimates it will take six to twelve months for this facility to be fully operational for handling F037 and F038 wastes. EPA also considered the uncertainty in its estimates of current capacity in its variance decision for F037 and F038 wastes.

2. Cement Kiln Capacity

Several commenters were concerned about EPA's intention to consider cement kiln combustion capacity, citing the low BTU content of F037 and F038. Cement kilns generally require that their solid wastes contain more than 5,000 or 6,000 BTU per pound. Based on available information, EPA estimates that roughly half of the routinely generated F037 and F038 sent off site will have a BTU value sufficient for combustion in cement kilns. On the other hand, EPA believes that F037 and F038 generated from the removal of hazardous wastes from surface impoundments will have a lower BTU value and are more likely to be treated in incinerators.

EPA has identified 14,000 tons of sludge capacity available per year at two cement kilns. One commenter reported that no cement kilns are accepting sludges, but EPA is aware of these two. Cement kiln sludge systems rely on slurrying wastes and feeding them through primary fuel ports. F037 and F038 would have to be reslurried, or bypass dewatering. The primary constraint on the use of this capacity for petroleum refining wastes is the difficulty of suspending large amounts of solids in liquid while maintaining high BTU. However, EPA recognizes the limitations of this capacity for petroleum refining sludges, and believes that cement kiln sludge capacity will not receive a large portion of the national F037 and F038 waste streams. Additional technical developments and operational experience are needed to allow these systems to routinely handle F037 and F038 wastes. EPA believes these changes will take six to twelve months.

EPA has identified 83,000 tons of containerized solids capacity, primarily at four cement kilns. Cement kiln containerized solids systems use drop feed systems to feed pails and bags containing hazardous wastes into the "cold" midsection of the kiln (the calcining zone). Wastes packaged into bags must generally be thermally dried to a water content of 5 to 25 percent. As is generally true for cement kilns, wastes are limited by BTU value. The primary constraints on the use of this capacity appear to be dewatering and packaging capacity. One commenter is concerned that the facilities identified by EPA as having containerized solids capacity are close to 100 percent utilized. After further analysis, EPA stands by the estimates prepared for the proposed rule. Three of the facilities included in this estimate routinely accept petroleum refining wastes, and as of September 1991, one was pursuing a permit modification to be able to burn K048–K052 and F037 and F038. EPA believes that containerized solids systems at cement kilns will be the preferred route for most routinely generated petroleum refining wastes, and has relied heavily on these systems in its capacity analysis for F037 and F038.

Cement kilns are continuing to increase their capacity to burn hazardous wastes, and technical advancements in feed systems are producing especially significant increases in capacity for solids. Estimated containerized solids capacity has roughly doubled since the Third Third rule. Because much of the available capacity for F037 and F038 wastes is new capacity, EPA is concerned that additional technical developments and operational experience are needed to allow these systems to handle routinely generated F037 and F038 wastes. Additionally, there is considerable uncertainty whether cement kilns will continue to provide the same capacity as they modify their equipment and operations to meet interim status requirements of the BIF rule (56 FR 7134, February 21, 1991). To comply with BIF rule interim status requirements, cement kilns must meet a 20 ppm hydrocarbon emission limit or establish an alternative limit based on baseline hydrocarbon emission rates when the facility is not burning hazardous wastes. Based on information from the cement industry, EPA believes that some cement kilns will have trouble meeting the 20 ppm limit or establishing a baseline due to variable hydrocarbon levels in their raw materials. If one of the major cement facilities providing containerized solids capacity is forced to cease operations, it would cause a major disruption to the commercial hazardous waste combustion system, by removing as much as 35,000 tons per year of capacity, leaving the net available capacity close to the amount of routinely generated F037 and F038 that are amenable to cement kilns. As discussed in Section VI.C., nearly half the routinely generated F037 and F038 wastestream is not amenable to cement kilns, and there is insufficient bulk solids capacity to handle this quantity. Due to these potential problems, EPA is reluctant to set the LDR effective dates such that large quantities of new wastes would be

introduced into the combustion systems immediately.

EPA has identified 24,000 tons of dry solids capacity available primarily at two cement kilns. Dry solids systems use pneumatic systems that convey dried materials to the "hot" end of the kiln. Wastes going through this feed mechanism are generally limited by their BTU value, moisture content, and ability to form freeflowing solid particles. The primary constraint on the use of this capacity for combustion of F037 and F038 is the availability of thermal drying capacity, which is necessary to reduce the moisture content to between 5 and 25 percent water. Commenters on the proposed rule noted that petroleum refining sludges, even if dried, may be too "tacky" for this type of feed system. EPA agrees that some F037 and F038 wastes may not be amenable to dry solids systems, and believes that dry solids systems will not receive a large portion of the nation's F037 and F038 waste streams. EPA is aware of several refineries that are using or planning to use thermal desorption and solvent extraction to meet BDAT standards for F037 and F038 wastes, and has accounted for existing on-site units by decreasing its estimates of demand for commercial treatment technologies. While these technologies are not currently commercially available, EPA is aware of other refineries exploring the possibility of building them on-site. The one-year national capacity variance will allow time for on-site development of these technologies.

C. Petroleum Refining Wastes and Other Organic Wastes

This section presents the capacity analysis for today's newly listed petroleum refining wastes and other organic wastes.

1. Required Capacity for Petroleum Refining Wastes (F037 and F038)

EPA is promulgating concentration levels as the treatment standards for wastewater and nonwastewater forms of F037 and F038. F037 and F038 nonwastewater standards are based on a transfer of the existing performance data for K048–K052 (55 FR 22520, June 1, 1990). Nonwastewater treatment standards for F037 and F038 wastes are based on solvent extraction and incineration for organic constituents, and stabilization for metals. EPA is also promulgating standards for wastewater forms of F037 and F038 based on the standards for multi-source leachate (F039). That is, for F037 and F038 wastewaters, the standards are based on biological treatment; or, wet air or chemical oxidation followed by carbon adsorption for organics; and chemical precipitation for metals.

The capacity analysis for the F037 and F038 petroleum refining wastes was conducted using information collected from a number of data sources. The primary data sources include data submitted voluntarily from refineries, the F037 and F038 Regulatory Impact Analysis (RIA) for the listing of the F037 and F038 wastes, the Petroleum Refinery Data Base (PRDB), the TSDR Survey, the Generator Survey, and the public comments submitted in response to the proposed rule (57 FR 958, January 9, 1992).

The RIA was prepared by EPA in 1990 in support of the listing rule for F037 and F038 wastes (55 FR 46354). The RIA includes an industry overview and profile of facilities affected by the listings, an analysis of baseline waste management practices, and regulatory compliance scenarios. The PRDB is based on a mail survey conducted by EPA in 1983 and has been updated to contain 1985 refining information. The TSDR Survey and Generator Survey were discussed previously (in the introduction to Section VI). Public comments submitted in response to the proposed rule present an overview of how industries would be affected by the land disposal restriction of newly listed F037 and F038 wastes.

EPA also used several supplemental data sources: two reports prepared by Midwest Research Institute (MRI), which support the F037 and F038 listing and the Toxicity Characteristic (TC) rule and which summarize sampling and analysis data collected by EPA for 16 petroleum refining facilities; no-migration petitions submitted by petroleum refineries for land treatment units; and the California Hazardous Petroleum Waste Data Base, which contains information on wastes that fit the F037 and F038 definition.

Using the available data and the Agency's best engineering judgment, EPA estimated F037 and F038 waste quantities based on current management practices and identified options for alternative management due to the LDR requirements. EPA derived demand estimates for two sources of F037 and F038 wastes: (1) Quantities from routine generation of F037 and F038 wastes, and; (2) quantities from the cleanout or closure of remaining surface impoundments. The Agency also developed estimates of available on-site treatment/recovery capacity and evaluated information submitted by refineries and treatment technology vendors on the viability of constructing on-site treatment/recovery capacity and the time that would be required to make such additions.

In the proposed rule (57 FR 958, January 9, 1992), EPA assumed that all F037 and F038 wastes would be removed from surface impoundments prior to May 1992. Wastes that remain in surface impoundments after May 8, 1992 would not be removed, but would be disposed of in place—that is, the surface impoundment would close as a landfill. Commenters on the proposed rule agreed with estimates of routine generation. However, many commenters provided data that surface impoundments would not be cleaned out by May 1992. Additionally, many comments indicated that many surface impoundments would not close as landfills after May 8, 1992, but would be cleaned out. Upon reassessment, EPA agrees with the commenters that F037 and F038 wastes are still being generated from surface impoundment cleanouts and closures. For today's final rule, therefore, EPA conducted separate capacity analyses for F037 and F038 generated routinely and F037 and F038 wastes from surface impoundments.

a. *Routine Generation.* For the purpose of the F037 and F038 capacity analysis, routinely generated F037 and F038 wastes are wastes generated from tanks, including wastes from equalization tanks and oil/water/solids separators (such as CPI separators and IAF units) that are not API separators or DAF units. EPA estimates that approximately 69,000 tons per year of dewatered F037 and F038 wastes (nonwastewaters) from routine treatment of petroleum refinery wastewaters will require alternative treatment due to the LDRs. Based on information from public comments and engineering judgement, EPA estimates that 41,000 tons of per year of this 69,000 tons will be high heat content wastes (i.e., equal to or greater than 5,000 Btu/lb) and would likely be managed at cement kilns as containerized solids, and 28,000 tons per year of low heat content wastes (i.e., less than 5,000 Btu/lb) would be managed in the form of bulk solids at incinerators. For the reasons described in section VI.B., EPA believes that cement kilns and incinerators will not have sufficient capacity to treat the quantity of routinely generated F037 and F038 wastes; therefore, the Agency is granting a one-year national capacity variance to all routinely generated F037 and F038 waste. This variance allows time for cement kilns to comply with interim status requirements of the BIF rule, and for additional bulk solids incineration

capacity and capacity of other treatment and recycling technologies (e.g., solvent extraction and thermal desorption) to come online to meet the demand for treatment from routinely generated F037 and F038.

b. *Generation from Surface Impoundment Cleanouts and Closures.* The Agency also considered the accumulated sludge quantities in surface impoundments. Many of these wastes are generated in unretrofitted impoundments (i.e., impoundments not satisfying the minimum technology requirements specified in sections 3004(o) and 3005(j)(11)), and would thus be land disposed in a prohibited manner. These impoundments can be retrofitted or replaced with tank systems, but according to many commenters, petroleum refineries may not be able to do so by the effective date of this rule, or for some time thereafter. See RCRA section 3005(j)(6), which allows four years from promulgation date of the rule identifying or listing the wastes to retrofit or close impoundments receiving newly identified or listed wastes (and no other hazardous wastes). Since most of these surface impoundments also accumulate organic toxicity characteristic (TC) wastes, identified as hazardous in March 1990, the refineries have to retrofit or close the impoundments by March 1994. Some impoundments may be granted a delay of closure (see 40 CFR 265.113 and 40 CFR 264.113) and thus will be allowed to remain in operation, providing that hazardous wastes (e.g., F037 and F038 wastes) are removed and the impoundment is used for non-hazardous wastes. For surface impoundments that do not close by May 1992, EPA estimates that 173,000 tons of dewatered F037 and F038 wastes will be generated from impoundment closure or cleanout between June 1992 and June 1993, and 99,000 tons between June 1993 and June 1994. These quantities will require alternative treatment to meet the LDR treatment standards.

Commenters indicated that F037 and F038 wastes generated from surface impoundment closures are generally of lower heat content than routinely generated F037 and F038 wastes. EPA agrees with this comment; therefore, a larger proportion of surface impoundment generated wastes would require incineration. Based on a follow-up analysis of public comments and engineering judgement, EPA estimates that of the total 173,000 tons generated between 1992 and 1993, 112,000 tons will be low heat content waste requiring incineration for nonpumpable sludge or bulk solids. Of the 99,000 tons generated between 1993 and 1994, 64,000 tons will be low heat content wastes requiring incineration for bulk solids. Because incineration capacity for bulk solids that could accommodate these wastes before they are land disposed is not adequate, EPA is granting a two-year national capacity variance for F037 and F038 wastes from surface impoundments.

The lack of alternative storage/treatment capacity raises two issues. The first is that during the period of a national capacity variance, restricted wastes disposed in surface impoundments can only be placed in impoundments meeting the minimum technology requirements of section 3004(o). See § 268.5(h), RCRA section 3004(h)(4) and *Mobil Oil* v. *EPA*, 871 F. 2d 149 (D.C. Cir. 1989). The second issue is that section 3005(j)(6) states that impoundments receiving newly identified or listed hazardous wastes have up to four years from the date of promulgation of the rule to retrofit or close the impoundment. As was described in section IV.H. of today's preamble, EPA believes that these provisions are in irreconcilable conflict, and, accordingly, EPA has significant discretion in determining how best to interpret them. The Agency is promulgating that in the case of wastes subject to a national capacity variance, that impoundments managing such wastes (and no other wastes subject to an earlier prohibition) have four years from the date of the identification or listing (i.e., the date identifying or listing of the wastes is promulgated, not the effective date of the rule, see section 3005(j)(11)) to retrofit or close.

Although land disposal in impoundments remains necessary during the four-year period allowed by statute for retrofitting, the Agency proposed that these surface impoundment wastes be removed and sent for the mandated treatment if adequate treatment capacity existed (section 3005(j)(5)). Some comments received in response to this proposal indicate that some refineries may not be able to remove waste from surface impoundments without first removing the impoundment from service, which would interrupt refinery operations and possibly affect oil and solids loading on the wastewater treatment system, potentially exceeding NPDES permit limits. EPA agrees with these comments and is therefore not requiring such annual cleaning of surface impoundments.

In addition, EPA proposed that impoundments must be clean closed. EPA's intent was to mandate removal of prohibited wastes at closure to be consistent with the statutory intent to treat wastes where capacity is available and not to dispose of untreated wastes in surface impoundments. (Where there is available treatment capacity, the strong statutory policy is to treat hazardous wastes rather than allow them to be land disposed. See RCRA sections 1002(7) and 1003 (4), (5), and (6).)

EPA received comments opposing the requirement of clean closure, citing acceptable alternative to clean closure, such as closure in place (40 CFR 265.228(a)(2) and 40 CFR 264.228(a) (2)), delay of closure (40 CFR 265.113(d)(e) and 40 CFR 264.113(d)(e)), and other closure options. EPA has considered these alternative closure practices and is allowing owners and operators of petroleum refineries the same flexibility available to other surface impoundment owners and operators. Therefore, EPA is not requiring that owners and operators of surface impoundments remove wastes when they close. If owners or operators remove wastes from surface impoundments after the expiration of the two-year national capacity variance, and they are unable to identify adequate treatment capacity, they may seek a case-by-case extension to the effective date of the LDR prohibition as stipulated under 40 CFR 268.5.

One commenter disagreed with EPA's proposal to allow owners and operators to generate F037 and F038 in unretrofitted impoundments. This commenter mentioned that their member companies had received a large number of inquiries concerning the closure and replacement of leaking surface impoundments, but that this interest declined as it became clearer that EPA was likely to allow them the maximum amount of time to retrofit. The commenter believes that owners and operators will take as much time as they are given to comply with the minimum technology requirements. The commenter therefore believes that no capacity shortfall exists, just a perceived "difficult" burden exists for closing surface impoundments. EPA disagrees with this comment. As indicated in today's preamble, EPA believes that four years from the date of promulgation of the listing or characteristic is a reasonable period within which owners and operators can come into compliance with the minimum technology requirements.

c. *Capacity Analysis Summary for F037 and F038 Wastes.* As stated earlier in this section, the capacity analysis was conducted separately for F037 and F038 wastes routinely generated and for F037 and F038 wastes from surface

impoundments. The estimate for routinely generated F037 and F038 waste generation requiring alternative treatment is 69,000 tons per year (nonwastewaters). EPA has no data indicating that any land-disposed wastewaters will require alternative treatment, and therefore EPA assumed this quantity to be zero. Based on the estimate that 69,000 tons per year of dewatered routinely generated F037 and F038 wastes will require alternative treatment, and the determination that insufficient capacity exists to treat these wastes in the next year, EPA is granting routinely generated F037 and F038 wastes a one-year national capacity variance. This variance expires on June 30, 1993, one year from promulgation of the LDR prohibition for these wastes (RCRA 3004(h) (1) and (2)). (EPA notes that it is dating the national capacity variance for these wastes from the date the prohibition took effect, rather than the date of publication, since the record does not support any longer extension).

EPA has estimated that cleanouts and closures of surface impoundments will generate 100,000 tons of low heat content wastes generated between 1992 and 1993 and 91,000 tons generated between 1993 and 1994. Because existing capacity at bulk solid incineration systems is insufficient to treat F037 and F038 wastes from surface impoundments, EPA is granting a two-year national capacity variance for these wastes. This variance expires on June 30, 1994, two years from promulgation of the LDR prohibition, the maximum extent allowed by law (RCRA 3004(h)(2)).

2. Required Capacity for Other Newly Listed Organic Wastes

This section presents EPA's analysis of required capacity for other newly listed organic wastes (surface disposed) including organic U waste, unsymmetrical dimethylhydrazine (UDMH) wastes, toluene diisocyanate (TDI) wastes, ethylene dibromide (EDB) wastes, ethylenebisdithiocarbamic (EBDC) wastes, and methyl bromide wastes.

a. *Unsymmetrical Dimethylhydrazine (UDMH) Production Wastes (K107, K108, K109, K110).*

K107—Column bottoms from product separation from the production of 1,1-dimethylhydrazine from carboxylic acid hydrazides

K108—Condensed column overheads from product separation and condensed reactor vent gases from the production of UDMH from carboxylic acid hydrazines

K109—Spent filter cartridges from product-purification from the production of UDMH from carboxylic acid hydrazines

K110—Condensed column overheads from intermediate separation from product purification from the production of UDMH for carboxylic acid hydrazines

For UDMH wastes, EPA is promulgating incineration as the method of treatment for nonwastewaters, and incineration, or chemical oxidation or biodegradation followed by carbon adsorption as methods of treatment for the wastewaters.

EPA listed four UDMH wastes (K107, K108, K109, K110) that are generated from the production of UDMH (unsymmetrical dimethylhydrazine, or 1,1-dimethylhydrazine) from carboxylic acid hydrazides. Also, some of these wastes are ignitable or corrosive and as such are currently subject to LDR standards.

Generation and management information concerning the UDMH wastes was collected by EPA during 1990 and early 1991 under the authority of section 3007 in RCRA. This capacity analysis incorporates data from that section 3007 information request.

The response to the section 3007 request noted that the only manufacturer who used the proprietary process generating UDMH wastes has ceased UDMH production. Therefore, the Agency assumes that no UDMH will require treatment prior to land disposal.

Based on available data, EPA believes that sufficient capacity exists for treatment of the UDMH wastes; therefore, EPA is not granting a national capacity variance for K107, K108, K109, and K110 wastewaters and nonwastewaters.

b. *2-Ethoxyethanol (U359).* For U359, EPA is promulgating incineration or fuel substitution as methods of treatment standards for the nonwastewaters, and incineration, or chemical oxidation followed by biological treatment, carbon absorption, or biodegradation followed by carbon adsorption for the wastewaters.

Generation and management information concerning the U359 wastes was collected by EPA during 1990 and early 1991 under the authority of section 3007 in RCRA. This capacity analysis incorporates data from that section 3007 information request.

The Agency estimates that less than 500 tons of U359 wastewaters are being land disposed and will require further treatment as a result of the LDRs. Most of the U359 waste generated in 1989 was incinerated on-site, and the remainder (less than one percent) was incinerated off-site. In addition, unspecified and variable quantities of untreated wastewater contaminated with U359 are reportedly generated on occasion at one generator's facility; however, this wastewater undergoes biological treatment on site. Because these wastes are rejected products, and the product has a market value, the Agency believes these wastes would be generated in small quantities.

Based on the available data (see Section VI.B), EPA believes that sufficient capacity exists for treatment of U359 wastes; therefore, EPA is not granting a national capacity variance for U359 wastewaters or nonwastewaters.

c. *Dinitrotoluene and Toluenediamine Production Wastes (K111–K112, U328 and U353).*

K111—Product washwaters from the production of dinitrotoluene via nitration of toluene

K112—Reaction by-product water from the drying column in the production of toluenediamine via hydrogenation of dinitrotoluene

U328—Ortho-toluidine

U353—Para-toluidine

For K111 wastewaters and nonwastewaters, EPA is promulgating concentration-based standards based on a transfer of the standards for F039 wastes. EPA is promulgating incineration as the method of treatment for K112 nonwastewaters; and incineration, or chemical oxidation followed by carbon adsorption, or biodegradation followed by carbon adsorption as methods of treatment for K112 wastewaters. For U328 and U353 wastes, EPA is promulgating incineration as the method of treatment for nonwastewaters; and incineration, or chemical oxidation followed by carbon adsorption, or biodegradation followed by carbon adsorption as methods of treatment for wastewaters.

During 1990 and early 1991, EPA collected generation and management information concerning these wastes under the authority of section 3007 in RCRA. This capacity analysis incorporates data from that section 3007 information request. In addition, the Agency has contacted other facilities in order to obtain further information concerning K111 and K112 waste generation, management practices, and residuals. Finally, the Agency reviewed information provided in response to the proposed rule (57 FR 957, January 9, 1992).

The Agency has identified approximately 3,500 tons of K111 nonwastewaters and no K112 nonwastewaters and no K111 or K112 wastewaters requiring alternative treatment. The majority of the K111 and K112 wastes generated are currently treated using a variety of alternative treatment or recovery methods and discharged through NPDES. The data

indicate that the residuals from treatment of K111 and K112 were further treated before being land disposed.

The Agency estimates that less than 500 tons of U328 and U353 nonwastewaters are being land disposed and will require further treatment as a result of the LDRs. EPA identified no U328 and U353 wastewaters requiring alternative treatment.

Based on the available data (see section VI.B), EPA believes that sufficient capacity exists for treatment of these wastes. Therefore, EPA is not granting a national capacity variance for K111, K112, U328, and U353 wastewaters or nonwastewaters.

d. *Ethylene Dibromide (EDB) Production Wastes (K117–K118, K136) and Methyl Bromide Production Wastes (K131 and K132).*

K117—Wastewaters from the reactor vent gas scrubber in the production of ethylene dibromide via the bromination of ethylene

K118—Spent adsorbent solids from the purification of EDB produced by bromination of ethylene

K136—Still bottoms from the purification of EDB

K131—Wastewater from the reactor and acid dryer from the production of methyl bromide

K132—Spent adsorbent and wastewater separator solids from the production of methyl bromide

For K117, K118, K136, K131, and K132 wastes, EPA is promulgating concentration-based standards based on a transfer of data used to calculate the U029 (bromomethane), U030 (4-bromophenyl phenyl ether), U066 (1,2-dibromo-3-chloropropane), U067 (ethylene dibromide, EDB), U068 (dibromomethane) and U225 (bromoform) Third Rule standards for nonwastewaters; and multisource leachate (F039) performance for wastewaters. EPA is promulgating standards based on incineration for nonwastewaters; and incineration, or chemical or wet air oxidation followed by carbon adsorption, or biological treatment, or steam or air stripping for wastewaters.

During 1990 and early 1991, EPA collected generation and management information concerning these wastes under the authority of section 3007 in RCRA. This capacity analysis incorporates data from that section 3007 information request. In addition, the Agency reviewed information provided in response to the ANPRM (56 FR 24444) and the proposed rule.

Based on new information received in response to the proposed rule, EPA estimates that less than 100 tons of currently land-disposed K118 nonwastewaters will require alternative treatment. EPA has identified no K117 or K136 waste generation and no K118 wastewaters currently being surface disposed.

EPA has identified no K131 or K132 wastes currently being land disposed and requiring alternative treatment or recovery. All identified K131 wastes currently generated are sent off site for acid reclamation.

Based on available data and using incineration as the treatment technology (see Section VI.B), the Agency believes that sufficient treatment capacity exists for treatment of these wastes; therefore, EPA is not granting a national capacity variance for K117, K118, K136, K131 and K132 wastewaters or nonwastewaters. EPA is granting a two-year national capacity variance to underground injected K117, K118, K131, and K132 wastes (see Section VI.F).

e. *Ethylenebisdithiocarbamic (EBDC) Production Wastes (K123, K124, K125, and K126).*

K123—Process wastewater (including supernates, filtrates, and washwaters) from the production of ethylenebisdithiocarbamic acid (EBDC) and its salts

K124—Reactor vent scrubber water from the production of EBDC and its salts

K125—Purification solids (including filtration, evaporation, and centrifugation solids) from the production of EBDC and its salts

K126—Baghouse dust and floor sweepings in milling and packaging operations from the production or formulation of EBDC and its salts

For EBDC wastes, EPA is promulgating incineration as the method of treatment for nonwastewaters; and incineration, or chemical oxidation followed by biological treatment or carbon absorption as methods of treatment for wastewaters.

During 1990 and early 1991, EPA collected generation and management information concerning the EBDC wastes under the authority of section 3007 in RCRA. This capacity analysis incorporates data from that section 3007 information request.

The Agency has identified less than 100 tons of K125 nonwastewaters that are currently land disposed and will require alternative treatment, and has identified no quantities of K123, K124, or K126 wastes that are currently being land disposed. No generation of K125 wastewaters, K124 wastes, or K126 wastes has been identified.

Based on available data, EPA believes sufficient capacity exists for treatment of the EBDC wastes; therefore, EPA is not granting a national capacity variance for K123, K124, K125, and K126 wastewaters or nonwastewaters.

D. Required and Available Capacity for Newly Listed Wastes Mixed With Radioactive Contaminants

EPA has defined a mixed RCRA/radioactive waste as any matrix containing a RCRA hazardous waste and a radioactive waste subject to the Atomic Energy Act (53 FR 37045, 37046, September 23, 1988). Regardless of the type of radioactive constituents that these wastes contain (e.g., high-level, low-level, or transuranic), they are subject to the RCRA hazardous waste regulations, including the land disposal restrictions.

Radioactive wastes that are mixed with spent solvents, dioxins, California list wastes, or First Third, Second Third, and Third wastes are subject to the land disposal restrictions already promulgated for those hazardous wastes. EPA granted two-year national capacity variances for all of these wastes because of a lack of national treatment capacity. Today's rule addresses the radioactive wastes that contain newly listed hazardous wastes being restricted in today's rulemaking.

The Department of Energy (DOE) is the primary generator of mixed RCRA/radioactive wastes. A variety of non-DOE facilities also generate mixed RCRA/radioactive wastes, including nuclear power plants, academic and medical institutions, and industrial facilities. Based upon a review of the available data, including data submitted by DOE under several rulemakings, the quantities of mixed RCRA/radioactive wastes containing newly listed wastes regulated by this rulemaking appear to be small.

Although DOE is in the process of increasing its capacity to manage mixed RCRA/radioactive wastes, information supplied by DOE under other rulemakings indicates that a significant capacity shortfall currently exists for the treatment of mixed RCRA/radioactive wastes, much of which is in storage facilities awaiting treatment. EPA's review of non-DOE data sources also showed a significant lack of commercial treatment capacity as well.

Any new commercial capacity for mixed RCRA/radioactive wastes that becomes available will be needed for mixed wastes that were regulated in previous land disposal restriction rulemakings and whose variances have already expired (i.e., radioactive wastes mixed with solvents, dioxins, California list wastes, or First Third, Second Third, or Third wastes). In addition, DOE has indicated that it will generally give treatment priority to mixed wastes that are already restricted under previous

LDR rules. Thus, EPA has determined that sufficient alternative treatment capacity is not available and is granting a two-year national capacity variance for mixed RCRA/radioactive wastewaters and nonwastewaters contaminated with newly listed wastes whose standards are being promulgated today.

One commenter on the proposed rule suggested that EPA not rely on DOE to develop the capacity needed to manage the largest quantities of mixed RCRA/radioactive wastes because of DOE's reportedly poor record of handling radioactive materials. EPA disagrees with this comment. DOE is responsible for managing many radioactive wastes and has a Federal statutory obligation to develop needed capacity. In addition, DOE is subject to regulations designed to ensure that its mixed RCRA/radioactive wastes are properly managed. EPA and authorized states regulate the hazardous components of these wastes under RCRA and the Nuclear Regulatory Commission (NRC) and agreement states regulate the radioactive components under the Atomic Energy Act and other statutes. DOE is generally self-regulating with respect to the radioactive component and is generally exempt from NRC regulations, except for DOE facilities that accept commercial high level wastes which are to be licensed by NRC.

The same commenter also suggested that EPA require that all non-DOE mixed RCRA/radioactive wastes be stored and managed under "emergency permits" at known commercial and on-site facilities, rather than allowing them to be generated, managed, and disposed "at an unknown number of unidentified generator sites." This commenter appears to be confused about the RCRA regulatory program. Mixed RCRA/radioactive wastes are not generated, managed, and disposed at "unidentified generator sites." All generators of more than 100 kilograms/month of RCRA hazardous wastes, including mixed wastes, must obtain an EPA identification number. Mixed RCRA/radioactive wastes, like other RCRA wastes, can be stored at the site of generation for greater than 90 days only if the generator has a permitted or interim status storage facility that is specifically allowed to handle mixed wastes. (In the case of generators of 100–1000 kilograms per month, the limit is 180 days, or 270 days in certain cases.) Furthermore, treatment or disposal of mixed RCRA/radioactive wastes is allowed only at permitted or interim status treatment or disposal facilities specifically authorized to handle mixed wastes. EPA believes that the current RCRA regulatory program is adequate to ensure proper management of the hazardous component of mixed waste and that "emergency permits" are unnecessary.

E. Required and Available Capacity for Debris Contaminated With Newly Listed Wastes

This capacity analysis focuses on debris contaminated with wastes whose treatment standards are being promulgated in this rule.[49] An estimated 80 percent of all debris contaminated with previously regulated wastes is presently disposed in hazardous waste landfills without prior treatment.[50] In today's rule, EPA is specifying that hazardous debris be treated prior to land disposal using one or more of the following families of debris treatment: extraction, destruction, or immobilization. (The availability of each of these treatments is discussed in greater detail in another section of this preamble.)

EPA used several data sources to estimate the total quantity of land-disposed hazardous debris. These sources include: comments received in response to the proposed rule (57 FR 958); responses to the ANPRM for the newly listed and identified wastes (56 FR 24444); information provided during a series of roundtable meetings held by the Agency in May and June of 1991 with representatives of companies involved in the management and disposal of hazardous debris; Records of Decision (RODs) of Superfund sites; the National Survey of Treatment, Storage, Disposal and Recycling Facilities (TSDR Survey); and the National Survey of Hazardous Waste Generators (Generator Survey).[51]

In general, EPA found severe limitations in estimating the total quantity of hazardous debris because the available data are incomplete and poorly defined. The reason for this lack of comprehensive data is several-fold: First, the regulated community reported that their data generally are not classified by debris but rather by waste code and waste description; second, the data from the TSDR and Generator Surveys were not collected and categorized specifically for debris; and debris were often mixed with soils,[52] and were frequently contaminated with more than one waste, thereby making the hazardous debris matrix and quantity determinations difficult; third, TSDR and Generator Surveys do not include data on debris contaminated with newly listed and identified wastes because they were not considered hazardous wastes in 1986; and fourth, debris that have been cleaned [decontaminated] are generally not reported as hazardous wastes because they are no longer considered hazardous debris. Commenters to the proposed rule agreed with the Agency's assessment of data limitations.

1. Waste Generation

The capacity analysis in today's rule is based on the data sources described above. For the total of currently land-disposed debris contaminated with RCRA hazardous wastes, EPA estimates that approximately one million tons are generated per year based on the reported percentage of the total of all hazardous waste land disposed. EPA also has estimated lower and upper bounds of 700,000 to 2.8 million tons per year, respectively, based on adjustment factors to the TSDR survey data. Some commenters to the proposed rule suggested that the Agency's estimate of the quantities of debris requiring treatment is low. However, no commenter provided national estimates of land-disposed hazardous debris.

The largest quantity of routinely generated debris contaminated with newly listed wastes is debris contaminated with F037 and F038 petroleum refining wastes. EPA's estimate for this quantity is 8,000 tons per year. In addition, EPA received information indicating that additional quantities of debris contaminated with F037 and F038 wastes may be generated from modernization of petroleum

[49] UDMH (K107–K110), dinitrotoluene (K111), toluene diamine (K112), ortho and para toluidine, ethylene dibromide, methyl bromide, 2-ethoxy ethanol (U359), ethylene bis-dithiocarbamic acid, and F037 and F038 petroleum refining wastes.

[50] Previously regulated wastes include solvents and dioxin wastes, California list wastes, and First Third, Second Third, and Third Third wastes. EPA has granted national capacity variances to soil and debris contaminated with First Third, Second Third, and Third Third wastes. The national capacity variances for debris contaminated with Third Third wastes expired on May 8, 1992. However, the Agency has extended this variance for one year (see section VI. of the preamble).

[51] EPA conducted the surveys during 1987 and 1988 to obtain comprehensive data on the nation's capacity for managing hazardous waste and the volumes of hazardous waste being land disposed as well as data on waste generation, waste characterization, and hazardous waste treatment capacity in units exempt from RCRA permitting.

[52] Data submitted by TSDFs in roundtable meetings sometimes combine hazardous debris with soil. Furthermore, TSDFs have stated that historical waste data are generally not kept by debris classifications.

refinery sewer and wastewater systems. EPA's estimate for debris contaminated with the remainder of wastes covered by today's rulemaking is less than 2,000 tons per year.

One commenter indicated that EPA's estimate of the quantity of debris contaminated with F037 and F038 wastes was low. However, this commenter provided no data that could serve as a basis for updating EPA's estimate. In the proposed rule, EPA acknowledged that decommissioning of large chemical plants and increasing remediation activities can significantly increase the estimated quantity of hazardous debris.

2. Current Management Practices

Waste generators and TSDFs report that most hazardous debris is currently landfilled without prior treatment. Stabilization or incineration are the reported treatment technologies for the small amounts of hazardous debris that are treated prior to landfilling. However, EPA has received information that materials-handling problems may limit the quantity of hazardous debris that currently can be treated by stabilization and incineration. Specifically, the size of many types of debris must be reduced before they can be treated (e.g., by shredding or grinding). Heavy duty equipment such as shredders and grinders are generally not part of the treatment process at hazardous waste treatment facilities and are not generally available. Consequently, the available capacity to treat hazardous debris is currently limited. In addition, large quantities of materials that are currently cleaned (decontaminated) and then managed as nonhazardous wastes may require additional management as hazardous debris. Commenters to the proposed rule agreed with EPA's assessment that there are materials-handling limitations in managing hazardous debris.

3. Available Capacity and Capacity Implications

EPA is promulgating that hazardous debris be treated prior to land disposal using one or more of the following families of debris treatment: Extraction, destruction, or immobilization. While materials-handling problems may limit the available destruction (e.g., incineration) and immobilization (e.g., stabilization) capacities, inadequate capacity exists for many of the promulgated technologies in the extraction family. Much of the capacity of extraction technologies currently used to decontaminate hazardous debris, such as water washing and steam cleaning, is not currently permitted, although EPA is proposing to expedite the permitting of these technologies. In conclusion, EPA believes that the current capacity available to treat hazardous debris is limited.

Therefore, EPA is today granting a two-year national capacity variance for debris contaminated with newly listed wastes covered in this rule. This variance would allow sufficient time for the installation and permitting of the treatment systems necessary to handle the quantities of hazardous debris affected by this rule. Existing commercial capacity and any new commercial capacity for debris that becomes available will be needed for debris contaminated with wastes listed in previous land disposal restriction rulemakings and not granted a capacity variance (i.e., debris contaminated with solvents, dioxins, or California list wastes). Commenters to the proposed rule generally agreed with EPA's analysis and the need for a national capacity variance for debris contaminated with newly listed wastes covered in this rule.

F. Capacity Determination for Underground Injected Wastes

As explained in previous rules concerning land disposal restrictions (see, e.g. 52 FR 32450, August 27, 1987; 53 FR 30912, August 16, 1988; 55 FR 22520, June 1, 1990), EPA is allocating available capacity first to those wastes disposed in surface units, next to wastes resulting from CERCLA and RCRA clean ups, and finally to underground injected wastes. Based on the continued application of this approach, the Agency is promulgating the following effective dates for injected wastes.

1. Newly Listed Wastes With Treatment Standards Which Current Data Indicate Are Not Being Underground Injected

The wastes K107, K108, K109, K110, K123, K124, K125, K126, K136, U328, U353, and U359 are the newly listed wastes for which numerical standards or specified methods are being promulgated, and which current data indicate are not being underground injected. Therefore, EPA is prohibiting these wastes from underground injection upon the effective date of this rule.

2. Newly Listed Wastes With Treatment Standards Which Current Data Indicate Are Being Underground Injected

The wastes F037, F038, K111, K112, K117, K118, K131, and K132 are the newly listed wastes for which current data indicate are being underground injected by Class I hazardous waste injection wells.

For K111 and K112 waste from the production of dinitrotoluene or toluenediamine, pretreatment includes neutralization and filtration. Only a small amount of this waste is being disposed of in a Class I hazardous waste injection well which has received a no-migration petition.

The treatment standards for F037 and F038, petroleum refining wastes, are based upon transfer of the performance of technologies previously established for K048–K052 wastes. Based on the Hazardous Waste Injection Well Inventory data base, EPA believes that a small volume of F037 and F038 wastes are being underground injected annually by permitted injection wells. No new data, indicating that larger injected volumes of these wastes, were received by the Agency during the comment period for the proposed rule. Therefore, as adequate alternative treatment capacity appears to be available, the Agency is not granting a two-year national capacity variance for any injected F037, F038, K111, and K112 waste, and is prohibiting these wastes from underground injection upon the effective date of this rule.

The treatment standards for K117, K118, K131, and K132 wastes are based upon liquid incineration. One comment received from the proposed rule indicated that a large volume of these wastes, which are in a mixed non-segregable waste stream exceeding 300 million gallons annually, were being underground injected. The Agency's current data indicate that there is inadequate available commercial treatment capacity for these wastes. Therefore, EPA is granting a two-year national capacity variance for injected K117, K118, K131, and K132 wastes in today's rule.

G. Revisions to Treatment Standards for K061, F006, and K062

In today's rule, the Agency is removing the low and high zinc subcategories for K061 and establishing the same numeric treatment standards based on HTMR for all K061 nonwastewaters. EPA also is establishing alternative treatment standards based on HTMR for K062 and T006. Today's rule does not preclude the use of any treatment technology that can meet these standards nor does it preclude the use of any technology that can meet the previously promulgated treatment standards for K062 and F006. The Agency received several comments questioning the availability of HTMR capacity to treat these wastes. Although commenters also questioned whether stabilization could meet the treatment

standards, one commenter submitted information that their stabilization process does meet the numeric treatment standards for K061. Since any technology that can meet the numeric standards for K061 can be used to treat those wastes, the Agency believes that there is sufficient treatment capacity for K061. Similarly, since the treatment standards based on HTMR for K062 and F006 are alternative standards and any technology currently used to treat K062 and F006 to the previously promulgated standards may continue to be used, the Agency believes that there is sufficient treatment capacity for K062 and F006.

VII. Implementation

As described in section VIII. of this preamble, State Authority, today's rule is being promulgated under HSWA authority. Therefore, until states receive authorization to implement today's rule, the Federal procedures and standards will be used for its implementation. The following sections describe some of the relevant generator and permitting procedures that apply to waste handlers as they comply with today's rule.

A. Facilities Qualifying for Interim Status Due to Storage of Prohibited Wastes

As discussed elsewhere in today's preamble, EPA has determined that adequate treatment capacity for hazardous debris will not be available following the expiration of the national capacity variance for these wastes on May 8, 1992, and has therefore granted a one-year national case-by-case extension to the LDR effective date for hazardous debris, provided certain recordkeeping and other requirements are met. However, even by May 1993 there will likely be generators who will still have difficulty obtaining treatment for these wastes. To a lesser degree, there may also be situations where generators of the newly listed wastes—for which treatment standards are prescribed in today's rule—are unable to initially arrange for appropriate treatment. Therefore, EPA believes that some generators without permits or interim status will need to accumulate wastes restricted from land disposal by today's rule for more than 90 days in order to acquire treatment required by part 268. Although 90 days is the maximum period allowed for accumulation storage at generator sites, if the wastes must remain on-site longer due to unforeseen, temporary, or uncontrollable circumstances, an extension of up to 30 days may be granted at the Regional Administrator's discretion. (See 40 CFR 262.34.) If, despite the best efforts of the generator, waste accumulation will exceed the 90 day limit (or 120 day limit, if an extension is granted), then the generator must obtain interim status for continued storage.

Section 3005(e) of RCRA establishes the criteria for obtaining interim status, and 40 CFR 270.70(a) codifies that provision. This section provides that facilities "in existence on the effective date of statutory or regulatory changes * * * that render the facility subject to the requirement to have a permit" may qualify for interim status if they make the appropriate application. A generator who is accumulating hazardous wastes in tanks or containers before the effective date of today's rule is "in existence" and may qualify for interim status provided that the continued storage is necessary to comply with the land disposal restrictions. Section 3005(e)(1) allows interim status only where new regulatory requirements subject an existing facility to permitting requirements. It is not intended to provide an opportunity for a facility to newly engage in hazardous waste management.

Generators who need to obtain interim status should submit a part A permit application to the Agency as provided in part 270. (Part A application instructions can be found at § 270.13.) In the part A application, the generator must demonstrate that the additional accumulation time is necessary as a result of the land disposal restrictions of part 268.

The part A must be submitted to the Agency by the deadline specified in § 270.10(e). Note that the § 270.10(e) deadline is the earlier of the following two alternative dates: (1) Six months after publication of regulations which first require the facility to comply with part 265, or (2) thirty days after the date they first become subject to the standards in part 265. It is expected that the deadline for most, if not all, of the large quantity generators will be established by the second alternative. By operation of 40 CFR 270.10(e)(ii), the generator first becomes subject to the permitting requirements when he exceeds the generator accumulation time limit. For example, after the 90-day accumulation period ends, the generator would be required to submit the part A within 30 days. Therefore, it is critical that any generator who will be newly subject to the interim status requirements become familiar with the part 270 requirements and submit the part A application on time.

Generators applying for interim status must comply with the applicable requirements of part 265. These new interim status facilities are also subject to corrective action orders under section 3008(h) of RCRA. Furthermore, if requested by the Administrator, the facility will be required to submit its part B permit application.

EPA anticipates that some of these new interim status facilities managing debris may find containment buildings more suitable for the storage or treatment of their restricted wastes than their existing tanks or containers. These facilities may request certain changes during interim status by following the procedures described below.

B. Containment Buildings at Generator Sites

As explained in section IV.G.3. of this preamble, generators who want to add a containment building for accumulation (including treatment) of waste for less than 90 days, can do so without obtaining a RCRA permit, provided the conditions in § 262.34 are met. These conditions include compliance with the containment building standards in subpart DD of part 265 and certain recordkeeping and reporting requirements. Such containment buildings can be used indefinitely, provided the generator ensures that each volume of waste remains in the unit for 90 days or less. When the generator has no further need to manage hazardous waste in the unit, then the building must be closed in accordance with § 265.1102.

C. Addition of Waste Management Capacity at Permitted and Interim Status Facilities

1. Permitted Facilities

Permitted treatment, storage, and disposal facilities may add new treatment processes and additional capacity pursuant to today's rule by applying for a permit modification under the Federal regulations at § 270.42 (see 53 FR 37912, September 28, 1988, for a full explanation of the permit modification procedures). Although the regulations at § 270.42 were promulgated under pre-HSWA authority, EPA may use these regulations in authorized States when necessary to implement HSWA provisions such as the land disposal restrictions (see 53 FR 37933).

The types of modifications needed to add new capacity or processes would likely require the submittal of a Class 2 or 3 modification. For containment buildings the permit modification type can be determined by consulting new section M in appendix I of § 270.42. The Class 2 modification process requires

Agency action on the request within 120 days. This action would consist of approval or denial, reclassification as a Class 3 modification, or authorization to conduct the activities for up to 180 days pending Agency action. Furthermore, for Class 2 modifications, construction to implement the requested facility change may commence 60 days after submission of the request. There is no deadline for Agency action for Class 3 modifications, which apply to more substantial facility changes.

Permitted facilities may also apply for a temporary authorization to initiate necessary activities while a Class 2 or 3 permit modification request is undergoing review, or to undertake a treatment or storage activity which will be of short duration. EPA may grant a temporary authorization for a term of up to 180 days. Any request for a temporary authorization must demonstrate compliance with the part 264 standards and also meet the criteria of § 270.42(e) for approval. Today's rule amends § 270.42(e)(3)(ii)(B) to allow temporary authorizations for containment buildings where necessary to treat or store restricted waste, including hazardous debris, in accordance with part 268. Interested members of the public (i.e., those that have previously expressed interest in any permitting action for the facility) will receive notice by mail of a facility's request for a temporary authorization, and another mail notice if EPA approves the request. The temporary authorization may be renewed once if the additional procedures of § 270.42(e) are followed, including the submission of appropriate permit modification information and the initiation of public meetings and public comment period. (See 53 FR 37919, September 28, 1988 for additional discussion of temporary authorizations.)

2. Interim Status Facilities

Treatment, storage, and disposal facilities managing hazardous waste under interim status may add new treatment processes or additional treatment or storage capacity by using the existing procedures for changes during interim status in § 270.72. Under these procedures, a facility must submit to EPA a revised part A permit application and justification explaining the need for the change. The change may then be approved by EPA.

In order for the change to be approved by EPA, it must meet one of several criteria, such as being necessary to comply with a Federal, State, or local requirement. Note that changes may not be made if they amount to reconstruction of the facility. This occurs when the capital investment for the changes to facility exceed 50 percent of the capital cost of a comparable entirely new facility. However, § 270.72(b)(6) in today's rule lifts the reconstruction limit for changes to treat or store in containment buildings hazardous waste subject to land disposal restrictions imposed by part 268, provided that the changes are made solely for the purpose of complying with part 268.

D. Conversion of Enclosed Waste Piles to Containment Buildings at Permitted and Interim Status Facilities

EPA expects that many permitted and interim status facilities will make changes to existing enclosed waste piles to meet the technical standards for containment buildings. These facilities may either continue the operation of the containment building under its permit or interim status, or may wish to operate the containment building in accordance with the 90-day generator accumulation provision in § 262.34.

I. Conversion of Enclosed Waste Piles to Interim Status or Permitted Containment Buildings

Permitted facilities may convert their enclosed waste piles to containment buildings by submitting a Class 2 permit modification, as provided in Item I.6. in appendix I to § 270.42. Facilities under interim status may amend their part A permit applications to convert an enclosed waste pile to a containment building under § 270.72(a)(3) as a change in process. Interim status facilities must submit a revised part A permit application and a justification explaining the need for the change to the Agency. The Agency must then approve the change before it can be implemented. After the conversion, the containment building standards of part 265 subpart DD would apply to the unit instead of the waste pile standards of subpart L. Closure of the enclosed waste pile is not triggered by the conversion process since hazardous waste will continue to be managed in the unit and the unit remains fully subject to the requirements of the permit or interim status.

2. Conversion of Permitted or Interim Status Enclosed Waste Piles to Accumulation Units Under Section 262.34

Section 262.34 allows generators to accumulate wastes on-site in certain units for 90 days or less without having a permit or interim status provided that they meet the requirements of that section. Today's rule extends the applicability of § 262.34 to accumulation in containment building units.

Owners and operators of new containment buildings that have not operated under interim status or a permit can accumulate wastes under § 262.34 provided they meet the requirements of that section. Owners and operators of enclosed waste piles that are permitted or operating under interim status can convert those units to generator status and continue accumulating wastes under the provisions of § 262.34 if they first meet the requirements for closure of the unit under § 264.1102 or § 265.1102.

In the case of tanks, the Agency has encountered many owners and operators that have sought conversion from permitted or interim status to generator status but have been unable to satisfy the closure requirements of § 264.197 or 265.197 without ceasing operation of the unit. While the Agency does not seek to require owners and operators to take these units out of operation as part of the conversion to generator status, the Agency does not allow conversion to generator status to serve to exempt permitted and interim status units from the applicable closure and financial responsibility requirements. The Agency seeks to assure that all units that have operated under the requirements of part 264 or 265 satisfy the applicable closure requirements of those parts, and that funds be available to do so. Thus, permitted or interim status tanks that convert to 90-day generator status must undergo full closure before they are released from financial assurance requirements. However, closure requirements are triggered by the final receipt of hazardous waste—not by conversion to 90-day generator status. Therefore, the tank may defer RCRA closure until it is taken out of hazardous waste service.

Similarly, where owners and operators of interim status or permitted containment buildings seek to convert to 90-day generator status but cannot close the unit without taking it out of operation, the owner or operator may accumulate waste as a generator under the provisions of § 262.34 (without a permit requirement) and close the unit at a later date. However, it should be noted that unless the owner or operator satisfies all applicable closure requirements prior to conversion, the unit remains subject to the requirements of subparts G (closure) and H (financial responsibility) until closure of the unit is complete. Furthermore, if the facility is in interim status, it retains interim status until a permit application is denied or interim status is lost. Permitted facilities would retain any corrective action

requirements, but could seek permit amendments to eliminate 40 CFR part 264 standards to which they were no longer subject (e.g., waste analysis plan).

VIII. State Authority

A. Applicability of Rules in Authorized States

Under section 3006 of RCRA, EPA may authorize qualified States to administer and enforce the RCRA program within the State. Following authorization, EPA retains enforcement authority under sections 3008, 3013, and 7003 of RCRA, although authorized States have primary enforcement responsibility. The standards and requirements for authorization are found in 40 CFR part 271.

Prior to the Hazardous and Solid Waste Amendments of 1984 (HSWA), a State with final authorization administered its hazardous waste program in lieu of EPA administering the Federal program in that State. The Federal requirements no longer applied in the authorized State, and EPA could not issue permits for any facilities that the State was authorized to permit. When new, more stringent Federal requirements were promulgated or enacted, the State was obliged to enact equivalent authority within specified time frames. New Federal requirements did not take effect in an authorized State until the State adopted the requirements as State law.

In contrast, under RCRA section 3006(g) (42 U.S.C. 6926(g)), new requirements and prohibitions imposed by HSWA take effect in authorized States at the same time that they take effect in nonauthorized States. EPA is directed to carry out these requirements and prohibitions in authorized States, including the issuance of permits, until the State is granted authorization to do so. While States must still adopt HSWA-related provisions as State law to retain final authorization, HSWA applies in authorized States in the interim.

Today's rule is being promulgated pursuant to sections 3004(d) through (k), and (m), of RCRA (42 U.S.C. 6924(d) through (k), and (m)). It is added to Table 1 in 40 CFR 271.1(j), which identifies the Federal program requirements that are promulgated pursuant to HSWA and that take effect in all States, regardless of their authorization status. States may apply for either interim or final authorization for the HSWA provisions in Table 1, as discussed in the following section of this preamble. Table 2 in 40 CFR 271.1(j) is also modified to indicate that this rule is a self-implementing provision of HSWA.

EPA is also finalizing a new management unit, containment buildings, which involves redefinition of the term "pile," pursuant to HSWA. This provision assures an adequate means of implementing the treatment standards, either by providing a means that treatment can occur without constituting impermissible land disposal, or by providing a safe staging area that would not constitute land disposal before best treatment. Cf. 56 FR 41175 (August 19, 1991) (portion of rule assuring availability of capacity adopted pursuant to HSWA). Thus, this portion of the rule is adopted pursuant to HSWA and takes effect immediately in authorized States.

B. Effect on State Authorization

As noted above, EPA is today finalizing a rule that will be implemented in authorized States until their programs are modified to adopt these rules and the modification is approved by EPA. Because the rule is pursuant to HSWA, a State submitting a program modification may apply to receive either interim or final authorization under RCRA section 3006(g)(2) or 3006(b), respectively, on the basis of requirements that are substantially equivalent or equivalent to EPA's. The procedures and schedule for State program modifications for either interim or final authorization are described in 40 CFR 271.21. It should be noted that HSWA interim authorization will expire on January 1, 1993 (see 40 CFR 271.24(c)).

Section 271.21(e)(2) requires that States with final authorization must modify their programs to reflect Federal program changes and to subsequently submit the modification to EPA for approval. The deadline by which the State would have to modify its program to adopt these regulations is specified in § 271.21(e). The deadline is July 1, 1993 if this rulemaking is finalized on or before June 30, 1992. This deadline can be extended in certain cases (see § 271.21(e)(3)). Once EPA approves the modification, the State requirements become subtitle C RCRA requirements.

States with authorized RCRA programs may already have requirements similar to those in today's final rule. These State regulations have not been assessed against the Federal regulations being finalized today to determine whether they meet the tests for authorization. Thus, a State is not authorized to implement these requirements in lieu of EPA until the State program modifications are approved. Of course, States with existing standards could continue to administer and enforce their standards as a matter of State law. In implementing the Federal program, EPA will work with States under agreements to minimize duplication of efforts. In many cases, EPA will be able to defer to the States in their efforts to implement their programs rather than take separate actions under Federal authority.

States that submit official applications for final authorization less than 12 months after the effective date of these regulations are not required to include standards equivalent to these regulations in their application. However, the State must modify its program by the deadline set forth in § 271.21(e). States that submit official applications for final authorization 12 months after the effective date of these regulations must include standards equivalent to these regulations in their application. The requirements a state must meet when submitting its final authorization application are set forth in 40 CFR 271.3.

The regulations being finalized today need not affect the State's Underground Injection Control (UIC) primacy status. A State currently authorized to administer the UIC program under the Safe Drinking Water Act (SDWA) could continue to do so without seeking authority to administer the amendments that will be promulgated at a future date. However, a State which wished to implement part 148 and receive authorization to grant exemptions from the land disposal restrictions would have to demonstrate that it had the requisite authority to administer sections 3004 (f) and (g) of RCRA. The conditions under which such an authorization may take place are discussed in a July 15, 1985 final rule (50 FR 28728).

IX. Regulatory Requirements

A. Economic Impact Screening Analysis Pursuant to Executive Order 12291

Executive Order No. 12291 requires that a regulatory agency determine whether a new regulation will be "major" and, if so, that a Regulatory Impact Analysis (RIA) be conducted. A major rule is defined as a regulation likely to result in an annual effect to the economy of $100 million or more; a major increase in costs or prices for consumers, individuals, industries, Federal, State, and local government agencies, or geographic regions; or significant adverse effects on competition, employment, investment, productivity, innovation, or the ability of United States-based enterprises to

compete with foreign-based enterprises in domestic or export markets. An RIA is a quantification of the potential benefits, costs, and economic impacts of a rule.

The Agency estimated the costs of today's rule to determine if it is a major regulation as defined by Executive Order 12291. The Agency expects today's rule to have an incremental annual cost below $100 million. Also, the Agency does not believe the rule will significantly increase costs for consumers, individuals, industries, Federal, State and local government agencies, or geographic regions, or have significant adverse effects on competition, employment, investment, innovation, or international trade.

The Agency has performed an Economic Impact Screening Analysis for this rule. The Agency has not assessed benefits but has rather focused its analyses on the costs and economic impacts attributable to today's rule.

1. Cost Methodology

To assess the cost of today's rule, EPA developed a cost methodology with four major analytical concerns: (a) Petroleum refining wastes, (b) remaining wastes affected by the rule, (c) hazardous debris, and (d) storage and treatment in containment buildings. In this section, the Agency summarizes the methodology it adopted for each of these concerns. In addition, at the end of the cost methodology section, EPA also lists several wastes included in today's rule which are not expected to be associated with any regulatory impacts.

a. *Approach for Petroleum Refining Wastes (F037 and F038).* In the analysis of the compliance costs for the treatment standards being set for petroleum refining wastes, the Agency first reviewed the work completed for the listing of F037 and F038, which EPA promulgated in October 1990 (see 55 FR 46386, subsequently referred to as the Listing Rule or Listing RIA).[53] EPA estimated in the Listing RIA that 470,000 tons of F037 and F038 nonwastewaters (with an average water content of 55 percent) were generated annually. The Agency assessed compliance costs for this volume under a compliance scenario that included LDR treatment before land disposal because it believed that the realistic post-regulatory management practice after listing will include treatment. The LDR treatment scenario consisted of dewatering of the waste followed by either incineration (on-site or off-site) or solvent extraction (on-site).

For today's rule, the Agency updated the F037 and F038 volume estimates used in the Listing RIA based on additional generation information obtained as part of the capacity determination (see section VI.C for the capacity analysis of F037 and F038). Based on this updated information, the Agency estimated that 223,000 tons of F037 and F038 nonwastewaters are generated annually (with an average water content of 30 percent). EPA estimated that 56,000 tons per year of F037 and F038 wastes were treated to meet the treatment standards in the baseline and that the industry will incur incremental costs in treating the remaining 167,000 tons.

Of the 167,000 tons of land disposed F037 and F038 requiring treatment, EPA estimated that roughly 17,000 tons (i.e., 10 percent) is land disposed in California. California has its own LDR program, under which F037 and F038 waste are restricted from land disposal as of May 8, 1992. The California land ban standards are substantively equivalent to those standards in today's rule. Thus, even if the Federal regulations are not promulgated, F037 and F038 waste will be restricted in this State. Therefore, EPA estimated that only 150,000 tons annually of F037 and F038 will require additional treatment prior to land disposal as a result of today's rule. For its cost analysis, EPA is ignoring the effect of the one-year national capacity variance being granted for this volume and rather estimates the expected annualized cost several years after the listing decision.

For the baseline scenario, the Agency estimated that 96,000 tons per year (i.e., 64 percent) of the F037 and F038 waste requiring additional treatment is managed on-site, and the remaining 54,000 tons (i.e., 36 percent) is sent off-site. Of the waste managed on-site, the Agency estimated that 91,000 tons per year (i.e., 95 percent) is managed using land treatment, and 5,000 tons per year (i.e., 5 percent) is landfilled. All wastes disposed off-site were assumed to go to landfills.

For the post-regulatory scenario, the Agency assumed that 130,000 tons (i.e., 87 percent) of the 150,000 tons requiring additional treatment will be treated on-site. Although the Listing RIA did not project any volume of waste going to on-site cokers, information indicates that in the post-regulatory scenario 34,000 tons per year (i.e., 26 percent) of the F037 and F038 volume managed on-site will be disposed of in such a manner, at a cost of $200 per ton. The remainder of the F037 and F038 volume managed on-site was assumed to be split evenly between solvent extraction (48,000 tons per year, or 37 percent, at a cost of $500 per ton) and incineration (48,000 tons per year, or 37 percent, at a cost of $400 per ton). The post-regulatory scenario assumed disposal of residuals in subtitle C landfills.

The Agency assumed that 20,000 tons per year (i.e., 13 percent) of the 150,000 tons requiring additional treatment will be treated off-site. The Agency estimated that 2,000 tons per year (i.e., 10 percent) of this volume will go to incineration, at a cost of $1,600 per ton, and the remaining 18,000 tons per year (i.e., 90 percent) will go to cement kilns, at a cost ranging from $700 per ton to $1,200 per ton. Although the Agency doesn't expect large increases in cement kiln capacity, there is uncertainty about future prices charged by cement kilns for hazardous waste.

b. *Approach for Remaining Wastes.* To determine the cost and economic impacts of the rule for newly listed wastes other than F037 and F038, EPA first identified the industries that will be affected. The Agency analyzed these industries to determine the amounts of the affected wastes that they generate, how these wastes are currently managed, and how these wastes will have to be managed to comply with LDR treatment standards.

The incremental cost of today's rule for each waste was estimated by comparing post-regulatory costs with the costs of current, or baseline, conditions. EPA lacked site-specific waste generation data for this screening analysis. Accordingly, the Agency developed costs for the baseline and post-regulatory scenarios assuming off-site commercial treatment for all wastes included in the cost analysis, even though off-site treatment may not be used by all generators since it generally is more expensive than on-site treatment.

The following paragraphs explain the approach used to evaluate costs for wastes besides F037 and F038 affected by today's rule.

(i) Newly Listed Organic Wastes. All newly listed organic chemical wastes affected by today's rule—unsymmetrical dimethylhydrazine production wastes, 2-ethoxyethanol, dinitrotoluene and toluenediamine production wastes, ethylene dibromide production wastes and methyl bromide production wastes, and ethylenebisdithiocarbamic acid production wastes—are land disposed in relatively small quantities. The

[53] Regulatory Impact Analysis for the Listing of Primary and Secondary Oil/Water/Solids Separation Sludges from the Treatment of Petroleum Refinery Wastewaters, prepared for U.S. EPA, Office of Solid Waste, Economic Analysis Staff, by DPRA, October 1990.

baseline for all newly listed wastes was defined as continued land disposal in units meeting minimum technological requirements.

(ii) K061, F006, K062. Today's rule eliminates the low zinc subcategory for K061 wastes and establishes numeric treatment standards for all K061 based on high temperature metals recovery (HTMR). Wastes previously included in the high zinc subcategory of K061 already had to meet treatment standards based on HTMR; they are unaffected by this change. Wastes previously included in the low zinc subcategory of K061 had to meet numeric treatment standards based on stabilization, although in some cases HTMR was being used.

EPA's cost analysis for the regulatory changes to K061 considered only the low zinc subcategory since wastes in the high zinc subcategory are not affected by the rule. The Agency assumed the baseline for wastes previously included in the low zinc subcategory K061 is stabilization. The Agency assumed that in the post-regulatory scenario managers of these wastes will use HTMR.

Today's rule establishes numeric treatment standards based on HTMR as an alternative treatment standard for K062 and F006. The Agency did not quantify the cost impact of the rule for these two wastes; it believed that any operator using HTMR for K062 and F006 will be using the technology only because it is more cost-effective than current management practices.

c. Approach for Hazardous Debris. (i) Previously Regulated Hazardous Debris. The majority of hazardous debris is already regulated under the Solvents and Dioxins, California list, and the First Third, Second Third, and Third Third LDR rules due to the waste code-carry-through principle. The waste code-carry-through principle, or mixture rule, states that a solid waste mixed with a listed hazardous waste bears the waste code of the listed hazardous waste.

For this hazardous debris, which is already restricted under the LDR program, the standards in today's rule are expected to be easier to implement and less costly than the previous standards. As one commenter stated, by specifying multiple acceptable BDAT technologies for a given hazardous contaminant category and debris class, EPA has given the generators and treaters a number of options to allow more cost-effective and efficient treatment of hazardous debris. In addition, the Agency is allowing hazardous debris to be treated to meet the existing LDR standards established for the listed wastes if the managers of hazardous debris so desire.

To estimate the incremental annual cost of treating previously regulated hazardous debris, EPA constructed probabilistic distributions of both the volume of previously regulated hazardous debris and the unit costs of treating various subsets of this volume before and after the rule takes effect. EPA relied on the expert judgment of its technical staff to collect the data necessary for this step. EPA considered three sources of generation of previously regulated hazardous debris: routinely generated debris (approximately 20 percent of all previously regulated hazardous debris), debris generated at remedial actions required by Federal and State regulations (approximately 30 percent), and debris generated at demolition and construction sites (approximately 50 percent). The volumes associated with each of these sources were further divided based on other considerations that would determine the type and cost of the technology used to treat the debris.

EPA's approach for previously regulated hazardous debris did not focus on volume and cost estimates for specific wastes or facilities. For this set of debris, estimates of total volume and costs were apportioned to sets of facilities with different debris generation characteristics and different treatment patterns. EPA assumed that in the baseline, incineration would always be used for debris contaminated with organic wastes (estimated to be 20 percent of previously regulated hazardous debris, on average, for all sets of facilities); immobilization always would be used for debris contaminated with organic wastes (estimated to be 20 percent of previously regulated hazardous debris, on average, for all sets of facilities); and incineration followed by immobilization always would be used for debris contaminated with both organic and inorganic wastes (estimated to be 60 percent of previously regulated hazardous debris, on average, for all sets of facilities). In the post-regulatory scenarios, EPA assumed that debris contaminated with organics would be treated using incineration 20 percent of the time and washing the remaining 80 percent of the time, debris contaminated with inorganics always would be treated using immobilization (i.e., no change from the baseline treatment), and debris contaminated with both organics and inorganics would be treated using incineration followed by immobilization 20 percent of the time and washing followed by immobilization 80 percent of the time. Cost information, presented in appendix C of the EIA was gathered for the Phase I analysis based on industry contacts and professional judgment. The ranges used for the costs of incineration and washing reflected that some debris treated with the technologies in the post-regulatory scenario would be exempted from subtitle C management.

(ii) Newly Regulated Hazardous Debris. To gather information for its cost estimate of treating debris contaminated with wastes newly restricted under today's rule, EPA used an approach involving structured interviews with recognized experts in the area of hazardous debris volumes and treatment technologies. An integral part of these interviews was identifying the uncertainties associated with estimates of future hazardous debris generation rates and treatment costs.

EPA first identified individuals with expert knowledge of the industries generating and managing newly regulated hazardous debris. EPA identified nine experts. Four of these experts were senior environmental managers associated with several of the 14 organic chemical facilities that potentially could generate debris contaminated with organic chemical production wastes regulated by today's rule. The remaining five experts were senior environmental managers associated with several of the over 190 petroleum refineries that could potentially generate debris contaminated with F037 and F038.

The Agency then developed protocols for structured interviews with the experts who had been identified. The Agency's protocol was similar in structure to those used by Stanford/SRI [54] and Morgan and Henrion,[55] although it was substantially abbreviated due to time constraints. The protocol involved five basic stages. These stages could be described as: (1) Motivating, (2) structuring, (3) debasing, (4) encoding, and (5) verifying.

Two individuals conducted each interview, one a professional facilitator and the other an engineer with expertise in the industry being regulated. Interviews typically lasted one hour, during which time information on hazardous debris volumes and incremental treatment costs was solicited. Interviewers stressed that ranges should be supplied rather than

[54] See: Spetzler, C.S. and Stael Von Holstein, C.-A.S., "Probability Encoding in Decision Analysis", Management Science, Vol. 22, No. 3. and Stael Von Holstein, C.-A.S. and Matheson, J.E., A Manual for Encoding Probability Distributions, SRI International, Palo Alto, CA., 1979.

[55] Morgan, M.G. and Henrion, M., Uncertainty: A Guide to Dealing with Uncertainty in Quantitative Risk and Policy Analysis, Cambridge: Cambridge University Press, 1990.

point estimates, and they requested that experts provide percentile probabilities for these ranges.

After the Agency had collected information from experts, it aggregated data and generated cost results in terms of ranges that reflected the uncertainty of the analysis. EPA used a probabilistic model to develop volume and cost estimates. The Agency produced overall volume and cost estimates for the newly regulated debris treatment standards based on the medians of data; it also generated ranges of volumes and costs that have a 98 percent likelihood of containing the true values. EPA analyzed volumes and costs separately for the petroleum refining industry, which will generate debris contaminated with F037 and F038, and the organic chemicals industry, which will generate the remainder of debris effected by the rule.

d. *Methodology for Assessing Regulatory Impact Due to Storage and Treatment in Containment Buildings.* As a result of today's rule, containment buildings could be used as a method of waste management. They potentially could provide regulatory relief to the regulated community. Accordingly, the Agency assessed the potential cost implications of using these units. In its assessment, EPA considered industries that will use containment buildings for storage of bulk wastes and treatment of contaminated debris.

(i) Industries and Wastes Potentially Using Containment Buildings for Storage of Bulk Wastes. EPA believes that two primary categories of facilities currently use structures very similar to containment buildings for storage and are likely to convert to use of containment buildings in the future: mineral processing and metal recycling facilities. Within the mineral processing category, the Agency believes that generators of aluminum potliners will be particularly affected by the provision. Within the metal recycling category, the Agency believes that brokers of batteries, battery recyclers (i.e., lead smelters), and generators and recyclers of dust and ash from primary steel producers will be particularly affected. The Agency bases these beliefs on a review of the waste volumes these industries generate and comments that it has received on industrial practices. In addition, the Agency received extensive public comment from representatives of the three industries, thus enabling the Agency to perform a more detailed analysis of these industries than of other industries.

In the case of aluminum potliners, EPA is assuming that aluminum facilities already have Subtitle C storage permits, since potliners are currently being stored on-site in waste piles pending bulk shipment off-site. Because waste piles are a form of land disposal, if there was no containment building provision, in order to comply with the LDRs EPA believes that large facilities will have revert to sending potliners off-site at the time of generation. This change in practices would result in higher transportation and disposal costs, given the increased frequency of shipments. Today's containment building provision will allow large generators of spent aluminum potliners to continue their present management methods even after treatment standards are set for K088.

In the case of the lead acid battery recovery industry, the Agency believes that brokers of lead acid batteries and recyclers of lead acid batteries will be the primary parties affected by the containment building provision. Attempts to handle furnace feed materials differently have proven unsuccessful and to date remain infeasible. Because EPA considers the staging of furnace feed materials in the furnace feed areas as land disposal under the LDRs, bulk storage would be prohibited unless the materials are first treated. Thus, if containment buildings were not excluded from LDR regulation, generators would have to seek treatment alternatives, such as off-site stabilization, that might be more expensive than lead recycling and that do not promote resource recovery. Today's provision will allow brokers and secondary smelting facilities to accumulate sufficient quantities to allow for more efficient shipment and processing.

Lastly, with regard to the primary steel production industry, steel facilities store, and sometimes treat, production dust, primarily K061, in order to lower the cost of waste management through waste accumulation. As in the lead smelting industry, attempts to handle furnace feed materials differently are infeasible. If generators are not able to store waste to facilitate transportation and treatment, they would have to seek management alternatives, such as off-site stabilization, that would remain feasible if waste had to be sent off-site immediately after generation. These alternatives might be more expensive than HTMR. The Agency believes that both generators of K061 and HTMR facilities could take advantage of the containment building provision and continue to store wastes in the present manner.

The Agency recognizes the possibility that small generators and recyclers of bulk hazardous waste may not recognize as significant regulatory relief from the containment buildings provision as larger generators. Small generators are less likely than larger generators to have existing structures which are similar in design to containment buildings, and small generators may not generate enough waste to fully capitalize a containment building. The Agency believes that many small generators and recyclers of all types of bulk hazardous waste presently use concrete storage bins that are regulated under RCRA as tanks (and thus are granted a 90-day storage exclusion from the LDRs). Storage in concrete bins is possible for small generators and recyclers because they do not need the large areas to store and monitor their hazardous waste. For example, a small generator of aluminum smelting waste may store its spent potliners, each weighing about 10 tons, in a tank-like concrete bin. Because of this use of concrete bins, the Agency believes that many small generators already enjoy the exclusion from the LDRs that use of containment buildings would provide.

On the other hand, the industrial practices of large generators and recyclers often necessitate the use of large containment buildings. Large aluminum smelting facilities are likely to generate spent potliners weighing an order of magnitude more than those of small generators (e.g., 150 tons versus 10 tons) and thus they could take advantage of the increased storage capabilities of large containment buildings. Large recyclers often require large areas for proper monitoring and preparation of waste, and also could benefit from the containment building provision. For example, large recyclers of lead smelting require substantial staging areas to achieve time-efficient and proper draining of lead waste from "cracked" batteries. Large facilities are the primary facilities likely to gain economies of scale in the transportation, treatment, and disposal costs from the containment building provision. As a result, the Agency believes that large volume managers of wastes, such as those found in the three industries being analyzed, will realize significant benefits from the provision, while small volume managers will not.

For this reason, as well as the fact that the scarcity of data on smaller facilities does not permit a meaningful analysis, the Agency has focused its analysis on large generators. The Agency acknowledges that other industries besides the three being considered could profit from the containment building provision. The Agency, however, is using the analysis

of these three industries to gain an understanding of the economic implications of containment buildings in use for storage of wastes.

(ii) Facilities Potentially Using Containment Buildings for Treatment of Hazardous Debris. In addition to analyzing the use of containment buildings in the aluminum smelting, secondary lead smelting, and steel production industries, the Agency assessed the effects of the provision on facilities generating hazardous debris. To analyze the potential cost savings associated with treatment in containment buildings, EPA assumed in lieu of the today's rule, that facilities would treat hazardous debris off-site; the Agency assumed that under the containment building provision in today's rule, facilities will treat debris on-site inside containment buildings. The Agency used a weighted average of commercial on-site and off-site extraction and immobilization costs for its cost comparison and took into account the cost of constructing and operating a containment building.

e. *Wastes Not Considered.* The costs associated with two groups of wastes—F001 through F005 spent solvents and 24 K- and U-wastes with wastewater standards based on scrubber waters—were not quantified by the Agency in this screening analysis. The Agency has regulated these wastes previously and is revisiting them in the rule only to modify the basis for concentration standards. The modifications are for the purpose of standardization in testing procedures and in the basis for treatment standards and for the purpose of clarification to ensure appropriate placement in the Code of Federal Regulations. These modifications will not change the required management practices for any of these wastes significantly. Thus, the Agency expects such changes to have no significant cost impacts.

2. Cost Estimates

a. *Total Cost Estimate.* The estimate for the incremental annual cost of the standards promulgated in today's rule is $57 million to $65 million per year.[56] Table IX–1 presents quantities of the wastes affected by today's rule. The estimated cost of compliance with the rule for each waste is presented in Table IX–2. Neither table includes F001 through F005 spent solvents or the 24 K- and U-wastes covered by today's rule because the effect of the rule on these wastes is negligible, as explained in Section IX.1.e.

[56] Wastewaters account for none of the cost of today's rule. No compliance costs are expected for treatment of wastewaters because wastewaters are typically discharged to publicly owned treatment works (POTWs) or to coastal and inland waterways under National Pollution Discharge Elimination System (NPDES) permit provisions. When wastewaters are discharged in this manner, they are not subject to the treatment standards required by the LDRs under RCRA.

b. *Waste Code Cost Estimates.* (i) Petroleum Refining Wastes (F037 and F038). The Agency estimates the total incremental annual cost for treatment of F037 and F038 nonwastewaters to range between $40 million and $47 million. This figure is based on an annual F037 and F038 land disposed volume of 130,000 tons per year in States other than California. In the upper bound of the cost range shown for F037 and F038, 35 percent of the post-regulatory cost are from off-site treatment. The high cement kiln price used in this analysis, $1,200 per ton, is expected to be an overestimate of the long-term price for treatment in cement kilns. Presently, cement kilns appear to be charging rates slightly below those charged by incinerators; as more cement kilns are able to handle wastes their prices should decrease. Because of the high prices charged by cement kilns, the Agency has analyzed the costs for F037 and F038 in a range, as shown above.

TABLE IX–1.—SUMMARY OF ANNUAL QUANTITIES OF WASTES AFFECTED BY THE LDRS

Waste	Annual land disposal rate	Form of waste affected	Generation type	Assumed management method
Petroleum refining sludges (F037 and F038)	130,000 tons of routinely generated waste currently land disposed, excluding waste generated in California.	Dewatered sludge	Routine	Solvent extraction; incineration; cement kilns.
Unsymmetrical dimethylhydrazine production wastes (K107–K110).	No longer produced			
2-Ethoxyethanol (U359)	<500 tons	Nonwastewater	Routine	Incineration or fuel substitution.
Dinitrotoluene and toluenediamine production wastes (K111 and K112, U328 and U353).	3,500 tons—K111, 0 tons—K112, <500 tons of U328 and U353.	Nonwastewater	Routine	Incineration.
Ethylene dibromide (EDB) production wastes (K117, K118, and K136) and methyl bromide production wastes (K131 and K132).	<100 tons—K118, <100 tons—K132.	Nonwastewater	Routine	Incineration.
Ethylenebisdithiocarbamic acid (EBDC) production wastes (K123, K124, K125, and K126).	<100 tons—K125	Nonwastewater	Routine	Incineration.
Electric arc furnace dust (K061)	67,000 tons of low zinc K061 [a].	Solid	Routine	High temperature metals recovery.
Debris contaminated with newly listed wastes [b]	XXX tons	Solid	Routine and intermittent.	Destruction; immobilization; extraction.
Previously regulated debris	1,000,000 tons	Solid	Routine and intermittent.	Destruction; immobilization; extraction.

[a] Of the set of wastes potentially affected by a new BDAT for wastes with high chromium and high nickel content (including K061, K062, and F006), the Agency is considering K061 only. The quantity given for K061 is based on the generation quantity instead of on the quantity that is land disposed.

[b] The quantity presented here for newly regulated debris is an estimate pending completion of the Agency's analysis for hazardous debris.

TABLE IX-2.—SUMMARY OF ANNUAL COSTS OF LDR PHASE I WASTES

[In millions of dollars per year]

Waste	Post regulatory costs	Baseline costs [a]	Incremental costs
Wastes with Positive Incremental Cost:			
Petroleum refining sludges (F037 and F038)	[b] 58 to 66	[b] 18	40 to 47
Unsymmetrical dimethylhydrazine production wastes (K107–K110)	0	0	0
2-Ethoxyethanol (U359)	0.4	0.1	0.3
Dinitrotoluene and toluenediamine production wastes (K111 and K112, U328 and U353)	7	1	6
Ethylene dibromide (EDB) production wastes (K117, K118, and K136) and methyl bromide production wastes (K131 and K132)	0.3	<0.1	0.3
Ethylenebisdithiocarbamic acid (EBDC) production wastes (K123, K124, K125, and K126)	0.2	0.1	0.2
Debris contaminated with newly listed wastes	15	5	10
Total for newly listed wastes	81 to 89	24	57 to 65
Wastes with Negative Incremental Cost:			
Electric arc furnace dust (K061)	19	30	(11)
Previously regulated debris	970	1,600	(560)

[a] Baseline assumes all waste is landfilled, except for previously regulated debris.
[b] The range of costs shown represents a unit price for cement kilns of between $700 per ton and $1200 per ton. This range is reflected in the total costs shown for each column as well.

(ii) Wastes from the Production of Unsymmetrical Dimethylhydrazine (K107–K110). The Agency did not calculate costs of treatment standards for wastes from the production of unsymmetrical dimethylhydrazine (UDMH) (K107, K108, K109, and K110). This decision was made based on information that these wastes are no longer generated.

(iii) 2-Ethoxyethanol Wastes (U359). The Agency estimated an incremental annual cost of $700,000 for the standards developed for these wastes. This cost is based on an upper bound assumption of incineration of 500 tons annually.

(iv) Wastes from Production of Dinitrotoluene and Toluenediamine (K111 and K112, U328 and U353). The Agency estimated an incremental annual cost of $6.1 million for the standards developed for these wastes. This figure is based on an annual land disposal estimate of 3,500 tons of K111 nonwastewater, an upper bound assumption of 100 tons of K112 nonwastewater, and an upper bound assumption of 500 tons of U328 and U353 combined.

(v) Wastes from Production of Ethylene Dibromide (EDB) (K117, K118, and K136). The standards for these wastes have an estimated incremental annual cost of $300,000. This figure is based on upper bound assumptions of 100 tons of K118 nonwastewater and 100 tons of K132 nonwastewater requiring incineration.

(vi) Wastes from Production of Ethylenebisdithiocarbamic Acid (EBDC) (K123–K126). The incremental annual cost estimated for these wastes is $150,000. This figure is based on an upper bound assumption of 100 tons of K125 nonwastewater requiring incineration.

(vii) K061, F006, K062. The only previously regulated wastes revisited in today's rule for which the Agency developed cost estimates are K061 low-zinc wastes. (As discussed above, the standards for F006 and K062 are expected to have no incremental costs associated with them.) The standards for K061 wastes are based on high temperature metals recovery (HTMR). These standards, as applied to K061, could save industry up to approximately $11 million annually (i.e., The standards in today's rule are potentially less costly than the existing standards.). This figure is based on an annual generation estimate of 67,000 tons. The Agency has used a generation estimate rather than a land disposal estimate for this waste because of the high level of uncertainty regarding the quantity of low zinc K061 that is currently treated using HTMR. The effect of using a generation estimate of the K061 volume is that the cost savings presented is likely to be an over-estimate of the true cost savings for these standards.

c. *Results for Hazardous Debris.* There are two groups of hazardous debris in this rule. The first group includes all previously regulated hazardous debris: Debris contaminated with wastes regulated under the previous HSWA land disposal restriction rules (i.e., Solvents and Dioxins, California List, First Third, Second Third, Third Third rules). The second group of hazardous debris includes debris contaminated with wastes newly regulated under today's rule (e.g., F037).

(i) *Previously Regulated Hazardous Debris.* As of May 8, 1992, all of the national capacity variances for the debris regulated in the HSWA land disposal restriction scheduled waste rules will expire. (If the Agency proceeds with the planned national case-by-case variance, this date would be extended to May 8, 1993.) All previously regulated hazardous debris would then be required to meet the existing standards for debris established in the scheduled waste rules. Since the Agency is interested in long-term treatment costs, its analysis does not take into account the effect of the national capacity variance on treatment of hazardous debris.

Standards for debris established in today's rule allow considerably more flexibility in debris treatment than did the standards established in the LDR scheduled waste rules. In addition, today's standards provide for the use of many more extraction technologies for treatment then the HSWA standards; extraction technologies often can be cheaper to use than the destruction and immobilization technologies that are required under current regulations. Furthermore, today's treatment standards allow debris treated by destruction and extraction technologies to be excluded from subtitle C disposal. Therefore, EPA estimates that today's standards for previously regulated debris will result in a potential regulatory relief to industry. The Agency estimates baseline costs, costs of debris treatment and the prior land disposal restrictions rules after all variances are expired to be $1,600 million per year; under this rule the costs would be reduced by $560 million per year to $970 million. It should be noted that if there is a portion of the previously regulated debris volume which would be generated and managed only during the period of the national capacity variance, to the degree that this portion is reflected in the cost savings presented, these savings would be over-estimated.

One issue should be noted, however, regarding the baseline for previously regulated debris. The standard baseline in cost analysis is formulated as the scenario of existing management requirements in the absence of a new rule. In today's rule, the volume of previously regulated debris is currently under a capacity variance. In the absence of today's rule, once the variance expires, treatment according to existing standards is required. Therefore, the baseline used in the cost analysis is the existing standards.[57] However, since most hazardous debris is currently under the national capacity variance, treatment of hazardous debris is not generally occurring. Therefore, the baseline being used does not reflect current debris management practices. Yet, in keeping with standard regulatory analysis procedures, the Agency believes it to be appropriate to analyze costs for the volume of previously regulated debris based on a baseline of compliance with existing standards.

(ii) Newly Regulated Hazardous Debris. The results of EPA's analysis indicate that the volume of hazardous debris newly regulated by today's rule has a 98 percent likelihood of falling between 18,000 and 119,000 tons per year and the corresponding incremental cost of managing this waste has a 98 percent likelihood of falling between $3.8 million and $120 million per year. The median annual incremental cost for treating newly regulated debris was $10 million. For purposes of determining whether today's rule is a major rule as defined by Executive Order 12291, EPA has used the median volume and cost results from its analysis.

The volume of debris contaminated with F037 and F038 has a 98 percent likelihood of falling between 13,000 tons per year and 24 million tons per year in the long term future (i.e., more than five years after promulgation of today's rule). The incremental annual cost of treating this debris has a 98 percent likelihood of falling between $1.2 million and $5.8 million. The median incremental cost of treating F037 and F038-contaminated debris in EPA's analysis was $3.1 million. EPA acknowledges that in the short-term future (i.e., in the first five years after promulgation), the compliance costs of treating debris contaminated with F037 and F038 will be much higher.

The volume of debris contaminated with newly regulated organic chemical wastes has a 98 percent likelihood of falling between 3,400 tons and 98,000 tons per year in the long term future. The incremental annual cost of treating this debris has a 98 percent likelihood of falling between $1.4 million and $120 million. The median incremental cost of treating debris contaminated with newly regulated organic waste was $7.1 million.

d. *Cost Savings From Storage and Treatment in Containment Buildings.* The Agency lacked information with which to infer the typical dimensions of a containment building used to treat contaminated debris; therefore, the same size containment buildings were used for the analysis of treatment containment buildings as were used for the storage containment building analysis. The calculations indicate that use of containment buildings designed to store the typical waste quantities associated with the three industries considered and to treat contaminated debris could result in significant cost savings. Please see the EIA for complete results from the Agency's analysis.

To arrive at the estimates of cost savings, the Agency calculated the annualized costs of containment buildings. All costs were estimated as the present value of the capital and recurring costs incurred by facilities over an assumed 20-year operating life. The present value costs was then annualized over 20 years to arrive at equal annual payments. Implicit in this approach is the assumption that facilities will be able to smooth out anticipated costs with some form of financing over a 20-year period. Three and seven percent social discount rates, assumed constant for 20 years, were used to calculate the annualized costs.

In addition to estimating the overall incremental cost savings of the containment building provision, the Agency addressed three other issues associated with containment buildings: the costs of retaining corrective action authority of the containment buildings, costs of recordkeeping, and costs of engineered barriers required for liquids and dust.

Under today's rule, corrective action authority will be extended to permitted containment buildings; corrective action authority will not be extended to unpermitted containment buildings (i.e., those buildings under the 90-day generator exemption from permitting). The Agency assumes that only facilities that already have RCRA permits will choose to construct permitted containment buildings and that all containment buildings constructed at facilities without existing RCRA permits will be unpermitted (i.e., they will not be affected by the corrective action provisions in today's rule). Based on these assumptions, the Agency does not believe that today's provision will produce any incremental costs or benefits with regard to corrective action authority.

The Agency believes the recordkeeping requirements of today's provision will have little impact on industries choosing to use containment buildings. The Agency assumed that annual recordkeeping costs range from $1100 to $33,000/facility, depending on the volume of waste managed.

In addition to quantitative estimates of recordkeeping costs, the Agency qualitatively assessed the benefits of recordkeeping requirements for containment buildings. The Agency believes the costs are justified given the potential benefits that the public may incur.

Recordkeeping establishes adequate inspection plans to ensure that the unit is operating as designated. This goal is achieved through the establishment of an inspection program that ensures the structural integrity of the unit and prompt detection of any leaks or releases. As discussed in section IV.G, the Agency is requiring an inspection schedule for these units whereby, at least once each week, monitoring and leak detection equipment, the containment building, and the area surrounding the containment building is checked to ensure the unit is being properly operated and that no leaks or releases have occurred.

The Agency believes such controls are key to providing simple, yet adequate, maintenance of facilities to prevent detrimental releases of hazardous waste. In addition, monitoring buildings and wastes releases facilitates the Agency's enforcement actions.

The Agency does not believe that facilities will be significantly affected by these requirements. It is the Agency's understanding that the majority of facilities already have, or could easily, modify their existing operations to add these recordkeeping measures. The Agency notes that large facilities are the most likely to use containment buildings and believes that these facilities will be able to incorporate additional recordkeeping into their present operations with relatively little cost.

The final issue the Agency analyzed with regard to containment buildings was costs associated with engineered

[57] It should be noted that due to the limited data available for the cost analysis for the previous LDR rules, the hazardous debris volumes estimated by the Agency were small in comparison to the previously regulated contaminated debris volume estimated for today's rule. EPA believes that it underestimated compliance costs for hazardous debris treatment under the previous LDR rules due to this lack of data.

barriers and fugitive dust emission controls. The annualized cost (i.e., assuming social discount rate of three percent and cost annualized over 20 years) for secondary containment ranged from $7,000 to $23,000 per year for systems for 50' x 30' containment building and 340' x 200' buildings, respectively. Fugitive dust control ranged from approximately $3,000 for a 50' x 30' building to $30,000 per year for a 340' x 200' structure. (The building dimensions are representative of possible containment structures for all of the three industries.)

Given the results of the analysis presented in this section, the Agency believes that the containment building provision will provide regulatory relief to large facilities, while having little to no impact on small facilities. The Agency believes that facilities in the mineral processing and recycling industries are particularly likely to benefit from this provision.

3. Economic Impacts

A full economic impacts analysis was not performed because of a lack of data in many areas. The Agency, however, qualitatively assessed the economic impacts attributable to today's rule.

a. *Petroleum Refining Wastes (F037 and F038).* The Listing RIA considered the economic impact of the F037 and F038 listing in light of anticipated land disposal restrictions on these wastes. The impacts estimated in the Listing RIA were driven by facility costs and the economic viability of facility owners. The results of the Listing RIA's economic impacts analysis are summarized below.

In the Listing RIA, two to five percent of the refineries (depending on the cost scenario) had cost impacts greater than one percent of sales. (Cost impacts exceeding one percent of sales can be viewed as an indicator of potentially significant economic impact.) Slightly under two percent of the refineries had cost impacts that exceeded two percent of sales under the high-cost scenario, indicating more severe economic impacts. Nine out of ten affected refineries in the high-cost scenario had costs below 0.5 percent of sales, and over three-quarters of the refineries fell below 0.25 percent, indicating no significant impacts.

The analysis of small entities presented in the Listing RIA indicated that there were potentially seven non-integrated refineries (i.e., refineries that did not produce their own crude and market their own products) with cost-to-sales ratios greater than one percent under the high-cost scenario. A further analysis of employment effects and potential closures was not possible because of insufficient financial data for individual refineries.

EPA compared the incremental compliance cost for the F037 and F038 standards in today's rule with that of the Listing Rule. The Agency found that today's rule will have an incremental compliance cost for F037 and F038 waste, including both nonwastewater and hazardous debris, of between $49 million and $58 million, while the Listing RIA estimated an incremental annual compliance cost of $53 million to $102 million. Based on its qualitative analysis, EPA believes that the economic impacts of today's rule will be less than the impacts estimated by the Listing RIA.

b. *Remaining Wastes.* Considering the economic impacts of LDRs for the newly listed organic wastes other than F037 and F038, the Agency estimated the costs associated with all wastes to be insignificant, with the possible exception of dinitrotoluene and toluenediamine production wastes. The Agency, however, did not have the data to examine these economic impacts.

A quantitative assessment of the economic impacts associated with the hazardous debris standards was not possible because of data limitations. The Agency does not have comprehensive site-specific information on the volumes of previously regulated or newly listed hazardous debris.

The Agency expects that the impacts for previously regulated debris will not be significant since the revised standards are likely to be no more costly, and in some cases less costly, than the standards which currently exist. The impacts of the rule on newly regulated hazardous debris are uncertain. The estimated incremental cost for these standards is expected to range between $3.8 million and $120 million annually. If a relatively large number of facilities bear the burden of this cost, it is likely that these standards will not have a significant impact.

B. Regulatory Flexibility Analysis

Pursuant to the Regulatory Flexibility Act of 1980, 5 U.S.C. 601 et seq., whenever an agency publishes a notice of rulemaking, it must prepare and make available for public comment a Regulatory Flexibility Analysis (RFA) that describes the effect of the rule on small entities (i.e., small businesses, small organizations, and small governmental jurisdictions). This analysis is unnecessary, however, if the rule is estimated not to have a significant economic effect on a substantial number of small entities.

According to EPA's guidelines for conducting an RFA, if over 20 percent of the population of small entities is likely to experience financial distress based on the costs of the rule, then the Agency considers that the rule will have a significant impact on a substantial number of small entities, and must perform an RFA. The Agency has virtually no data on small entities affected by today's rule. Because of the low incremental costs incurred for the newly listed waste standards, the Agency believes that the only area of potential importance is the hazardous debris treatment standards. The previously regulated debris standards, being potentially a regulatory relief, are, for this analysis, considered to not have an effect on small entities. For the debris contaminated with newly listed wastes, the impacts to small facilities are uncertain, although may be significant. Therefore, although insufficient data was available to make a determination, the Agency estimates that there are not significant impacts on over 20 percent of the population of small entities based on the costs of the rule, so the Agency has not conducted an RFA for today's rule.

C. Paperwork Reduction Act

The information collection requirements for newly listed wastes were promulgated in previous land disposal restriction rulemakings and approved by the Office of Management and Budget (OMB) under the Paperwork Reduction Act (PRA), 44 U.S.C. 3501 et seq. and have been assigned OMB control number 2050–0085. A copy of the Information Collection Request (ICR) document (ICR #1442.03) may be obtained from Sandy Farmer, Information Policy Branch, EPA, 401 M Street SW. (PM–223Y), Washington, DC 20460 or by calling (202) 260–2740.

The new information collection requirements and revisions to existing requirements in this rule will be submitted for approval to OMB under the PRA. These requirements are not effective until OMB approves them and a technical amendment to that effect is published in the **Federal Register**.

Send comments regarding the burden estimate or any other aspect of this collection of information, including suggestions for reducing this burden, to Chief, Information Policy Branch, PM–223Y, U.S. Environmental Protection Agency, 401 M Street SW., Washington, DC 20460; and to the Office of Information and Regulatory Affairs, Office of Management and Budget, Washington, DC 20503, marked "Attention: Jonathan Gledhill."

List of Subjects

40 CFR Part 148

Administrative practice and procedure, Hazardous waste, Reporting and recordkeeping requirements, Water supply.

40 CFR Part 260

Administrative practice and procedure, Confidential business information, Hazardous waste.

40 CFR Part 261

Hazardous waste, Recycling, Reporting and recordkeeping requirements.

40 CFR Part 262

Exports, Hazardous materials transportation, Hazardous waste, Imports, Labeling, Packaging and containers, Reporting and recordkeeping requirements.

40 CFR Part 264

Air pollution control, Hazardous waste, Insurance, Packaging and containers, Reporting and recordkeeping requirements, Security measures, Surety bonds.

40 CFR Part 265

Air pollution control, Hazardous waste, Insurance, Packaging and containers, Reporting and recordkeeping requirements, Security measures, Surety bonds, Water supply.

40 CFR Part 268

Hazardous waste, Reporting and recordkeeping requirements.

40 CFR Part 270

Administrative practice and procedure, Confidential business information, Hazardous materials transportation, Hazardous waste, Reporting and recordkeeping requirements, Water pollution control, Water supply.

40 CFR Part 271

Administrative practice and procedure, Confidential business information, Hazardous materials transportation, Hazardous waste, Indians—land, Intergovernmental relations, Penalties, Reporting and recordkeeping requirements, Water pollution control, Water supply.

Dated: June 30, 1992.

William K. Reilly,

Administrator.

For the reasons set out in the preamble, title 40, chapter I, of the Code of Federal Regulations is amended as follows:

PART 148—HAZARDOUS WASTE INJECTION RESTRICTIONS

1. The authority citation for part 148 continues to read as follows:

Authority: Section 3004, Resource Conservation and Recovery Act, 42 U.S.C. 6901 et. seq.

2. Section 148.17 is added to subpart B of part 148 to read as follows:

§ 148.17 Waste specific prohibitions; newly listed wastes.

(a) Effective November 9, 1992, the wastes specified in 40 CFR part 261 as EPA hazardous waste numbers F037, F038, K107, K108, K109, K110, K111, K112, K117, K118, K123, K124, K125, K126, K131, K136, U328, U353, and U359 are prohibited from underground injection.

(b) Effective June 30, 1995, the wastes specified in 40 CFR part 261 as EPA Hazardous waste numbers K117, K118, K131, and K132 are prohibited from underground injection.

(c) The requirements of paragraphs (a) and (b) of this section do not apply:

(1) If the wastes meet or are treated to meet the applicable standards specified in subpart D of part 268; or

(2) If an exemption from a prohibition has been granted in response to a petition under subpart C of this part; or

(3) During the period of extension of the applicable effective date, if an extension has been granted under § 148.4 of this part.

PART 260—HAZARDOUS WASTE MANAGEMENT SYSTEM: GENERAL

3. The authority citation for part 260 continues to read as follows:

Authority: 42 U.S.C. 6905, 6912(a), 6921–6927, 6930, 6934, 6935, 6937, 6938, 6939, and 6974.

4. In § 260.10, a definition for "containment building" is added in alphabetical order and the definitions of "miscellaneous unit" and "pile" are revised to read as follows:

§ 260.10 Definitions.

* * * * *

Containment building means a hazardous waste management unit that is used to store or treat hazardous waste under the provisions of subpart DD of parts 264 or 265 of this chapter.

* * * * *

Miscellaneous unit means a hazardous waste management unit where hazardous waste is treated, stored, or disposed of and that is not a container, tank, surface impoundment, pile, land treatment unit, landfill, incinerator, boiler, industrial furnace, underground injection well with appropriate technical standards under 40 CFR part 146, containment building, or unit eligible for a research, development, and demonstration permit under § 270.65 of this chapter.

* * * * *

Pile means any non-containerized accumulation of solid, nonflowing hazardous waste that is used for treatment or storage and that is not a containment building.

* * * * *

PART 261—IDENTIFICATION AND LISTING OF HAZARDOUS WASTE

5. The authority citation for part 261 continues to read as follows:

Authority: 42 U.S.C. 6905, 6912(a), 6921, 6922, and 6938.

6. In § 261.3 paragraphs (a)(2)(iii) and (c)(2)(ii)(C) are revised and paragraph (f) is added to read as follows:

§ 261.3 Definition of hazardous waste.

(a) * * *

(2) * * *

(iii) It is a mixture of a solid waste and a hazardous waste that is listed in subpart D of this part solely because it exhibits one or more of the characteristics of hazardous waste identified in subpart C of this part, unless the resultant mixture no longer exhibits any characteristic of hazardous waste identified in subpart C of this part, or unless the solid waste is excluded from regulation under § 261.4(b)(7) and the resultant mixture no longer exhibits any characteristic of hazardous waste identified in subpart C of this part for which the hazardous waste listed in subpart D of this part was listed. (However, nonwastewater mixtures are still subject to the requirements of part 268 of this chapter, even if they no longer exhibit a characteristic at the point of land disposal).

* * * * *

(c) * * *

(2) * * *

(ii) * * *

(C)(*1*) Nonwastewater residues, such as slag, resulting from high temperature metals recovery (HTMR) processing of K061, K062 or F006 waste, in units identified as rotary kilns, flame reactors, electric furnaces, plasma arc furnaces, slag reactors, rotary hearth furnace/electric furnace combinations or industrial furnaces (as defined in paragraphs (6), (7), and (13) of the definition for "Industrial furnace" in 40 CFR 260.10), that are disposed in subtitle D units, provided that these residues meet the generic exclusion levels

identified in the tables in this paragraph for all constituents, and exhibit no characteristics of hazardous waste. Testing requirements must be incorporated in a facility's waste analysis plan or a generator's self-implementing waste analysis plan; at a minimum, composite samples of residues must be collected and analyzed quarterly and/or when the process or operation generating the waste changes. Persons claiming this exclusion in an enforcement action will have the burden of proving by clear and convincing evidence that the material meets all of the exclusion requirements.

Constituent	Maximum for any single composite sample—TCLP (mg/l)
Generic exclusion levels for K061 and K062 nonwastewater HTMR residues	
Antimony	0.10
Arsenic	0.50
Barium	7.6
Beryllium	0.010
Cadmium	0.050
Chromium (total)	0.33
Lead	0.15
Mercury	0.009
Nickel	1.0
Selenium	0.16
Silver	0.30
Thallium	0.020
Zinc	70
Generic exclusion levels for F006 nonwastewater HTMR residues	
Antimony	0.10
Arsenic	0.50
Barium	7.6
Beryllium	0.010
Cadmium	0.050
Chromium (total)	0.33
Cyanide (total) (mg/kg)	1.8
Lead	0.15
Mercury	0.009
Nickel	1.0
Selenium	0.16
Silver	0.30
Thallium	0.020
Zinc	70

(*2*) A one-time notification and certification must be placed in the facility's files and sent to the EPA region or authorized state for K061, K062 or F006 HTMR residues that meet the generic exclusion levels for all constituents and do not exhibit any characteristics that are sent to subtitle D units. The notification and certification that is placed in the generators or treaters files must be updated if the process or operation generating the waste changes and/or if the subtitle D unit receiving the waste changes. However, the generator or treater need only notify the EPA region or an authorized state on an annual basis if such changes occur. Such notification and certification should be sent to the EPA region or authorized state by the end of the calendar year, but no later than December 31. The notification must include the following information: The name and address of the subtitle D unit receiving the waste shipments; the EPA Hazardous Waste Number(s) and treatability group(s) at the initial point of generation; and, the treatment standards applicable to the waste at the initial point of generation. The certification must be signed by an authorized representative and must state as follows: "I certify under penalty of law that the generic exclusion levels for all constituents have been met without impermissible dilution and that no characteristic of hazardous waste is exhibited. I am aware that there are significant penalties for submitting a false certification, including the possibility of fine and imprisonment."

* * * * *

(f) Notwithstanding paragraphs (a) through (d) of this section and provided the debris as defined in part 268 of this chapter does not exhibit a characteristic identified at subpart C of this part, the following materials are not subject to regulation under 40 CFR parts 260, 261 to 266, 268, or 270:

(1) Hazardous debris as defined in part 268 of this chapter that has been treated using one of the required extraction or destruction technologies specified in Table 1 of § 268.45 of this chapter; persons claiming this exclusion in an enforcement action will have the burden of proving by clear and convincing evidence that the material meets all of the exclusion requirements; or

(2) Debris as defined in part 268 of this chapter that the Regional Administrator, considering the extent of contamination, has determined is no longer contaminated with hazardous waste.

PART 262—STANDARDS APPLICABLE TO GENERATORS OF HAZARDOUS WASTE

8. The authority citation for part 262 continues to read as follows:

Authority: 42 U.S.C. 6906, 6912, 6922, 6923, 6924, 6925, and 6937.

9. In § 262.34, paragraph (a)(1)(iii) introductory text is amended by removing the semicolon at the end and replacing it with a colon, paragraph (a)(1)(iii)(B) and the concluding text of paragraph (a)(1) are revised, and paragraph (a)(1)(iv) is added to read as follows:

§ 262.34 Accumulation time.

(a) * * *

(1) * * *

(iii) * * *

(B) Documentation of each waste removal, including the quantity of waste removed from the drip pad and the sump or collection system and the date and time of removal; and/or

(iv) The waste is placed in containment buildings and the generator complies with subpart DD of 40 CFR part 265, has placed its professional engineer certification that the building complies with the design standards specified in 40 CFR 265.1101 in the facility's operating record no later than 60 days after the date of initial operation of the unit. After February 18, 1993, PE certification will be required prior to operation of the unit. The owner or operator shall maintain the following records at the facility:

(A) A written description of procedures to ensure that each waste volume remains in the unit for no more than 90 days, a written description of the waste generation and management practices for the facility showing that they are consistent with respecting the 90 day limit, and documentation that the procedures are complied with; or

(B) Documentation that the unit is emptied at least once every 90 days.

In addition, such a generator is exempt from all the requirements in subparts G and H of 40 CFR part 265, except for §§ 265.111 and 265.114.

* * * * *

10. In § 262.34(a), the first paragraph designated (a)(2) and the undesignated paragraph following (a)(2)(ii) are removed.

PART 264—STANDARDS FOR OWNER AND OPERATORS OF HAZARDOUS WASTE TREATMENT, STORAGE, AND DISPOSAL FACILITIES

11. The authority citation for part 264 continues to read as follows:

Authority: 42 U.S.C. 6905, 6912(a), 6924, and 6925.

12. Section 264.110 is amended by removing the word "and" from the end of paragraph (b)(1), by adding a semicolon in place of the period at the end of paragraph (b)(2), by adding "; and" in place of the period at the end of paragraph (b)(3), and by adding a new paragraph (b)(4) to read as follows:

§ 264.110 Applicability.

* * * * *

(b) * * *

(4) Containment buildings that are required under § 264.1102 to meet the requirement for landfills.

13. Section 264.111 is amended by revising paragraph (c) to read as follows:

§ 264.111 Closure performance standard.

* * * * *

(c) Complies with the closure requirements of this subpart, including, but not limited to, the requirements of §§ 264.178, 264.197, 264.228, 264.258, 264.280, 264.310, 264.351, 264.601 through 264.603, and 264.1102.

14. Section 264.112 is amended by revising paragraph (a)(2) to read as follows:

§ 264.112 Closure plan; amendment of plan.

(a) * * *

(2) The Director's approval of the plan must ensure that the approved closure plan is consistent with §§ 264.111 through 264.115 and the applicable requirements of subpart F of this part, §§ 264.178, 264.197, 264.228, 264.258, 264.280, 264.310, 264.351, 264.601, and 264.1102. Until final closure is completed and certified in accordance with § 264.115, a copy of the approved plan and all approved revisions must be furnished to the Director upon request, including requests by mail.

* * * * *

15. Section 264.140 is amended by adding a semicolon in place of ", and" at the end of paragraph (b)(1), by adding a semicolon in place of the period at the end of paragraph (b)(2), by adding "; and" in place of the period at the end of paragraph (b)(3), and by adding a new paragraph (b)(4) to read as follows:

§ 264.140 Applicability.

* * * * *

(b) * * *

(4) Containment buildings that are required under § 264.1102 to meet the requirements for landfills.

* * * * *

16. Section 264.142 is amended by revising the introductory text of paragraph (a) to read as follows:

§ 264.142 Cost estimate for closure.

(a) The owner or operator must have a detailed written estimate, in current dollars, of the cost of closing the facility in accordance with the requirements in §§ 264.111 through 264.115 and applicable closure requirements in §§ 264.178, 264.197, 264.228, 264.258, 264.280, 264.310, 264.351, 264.601 through 264.603, and 264.1102.

* * * * *

17. Subpart DD is added to part 264 to read as follows:

Subpart DD—Containment Buildings

Sec.
264.1100 Applicability.
264.1101 Design and operating standards.
264.1102 Closure and post-closure care.
264.1103–264.1110 [Reserved]

Subpart DD—Containment Buildings

§ 264.1100 Applicability.

The requirements of this subpart apply to owners or operators who store or treat hazardous waste in units designed and operated under § 264.1101 of this subpart. These provisions will become effective on February 18, 1993, although owner or operator may notify the Regional Administrator of his intent to be bound by this subpart at an earlier time. The owner or operator is not subject to the definition of land disposal in RCRA section 3004(k) provided that the unit:

(a) Is a completely enclosed, self-supporting structure that is designed and constructed of manmade materials of sufficient strength and thickness to support themselves, the waste contents, and any personnel and heavy equipment that operate within the unit, and to prevent failure due to pressure gradients, settlement, compression, or uplift, physical contact with the hazardous wastes to which they are exposed; climatic conditions; and the stresses of daily operation, including the movement of heavy equipment within the unit and contact of such equipment with containment walls;

(b) Has a primary barrier that is designed to be sufficiently durable to withstand the movement of personnel, wastes, and handling equipment within the unit;

(c) If the unit is used to manage liquids, has:

(1) A primary barrier designed and constructed of materials to prevent migration of hazardous constituents into the barrier;

(2) A liquid collection system designed and constructed of materials to minimize the accumulation of liquid on the primary barrier; and

(3) A secondary containment system designed and constructed of materials to prevent migration of hazardous constituents into the barrier, with a leak detection and liquid collection system capable of detecting, collecting, and removing leaks of hazardous constituents at the earliest practicable time, unless the unit has been granted a variance from the secondary containment system requirements under § 264.1101(b)(4);

(d) Has controls sufficient to prevent fugitive dust emissions to meet the no visible emission standard in § 264.1101(c)(1)(iv); and

(e) Is designed and operated to ensure containment and prevent the tracking of materials from the unit by personnel or equipment.

§ 264.1101 Design and operating standards.

(a) All containment buildings must comply with the following design standards:

(1) The containment building must be completely enclosed with a floor, walls, and a roof to prevent exposure to the elements, (e.g., precipitation, wind, run-on), and to assure containment of managed wastes.

(2) The floor and containment walls of the unit, including the secondary containment system if required under paragraph (b) of this section, must be designed and constructed of materials of sufficient strength and thickness to support themselves, the waste contents, and any personnel and heavy equipment that operate within the unit, and to prevent failure due to pressure gradients, settlement, compression, or uplift, physical contact with the hazardous wastes to which they are exposed; climatic conditions; and the stresses of daily operation, including the movement of heavy equipment within the unit and contact of such equipment with containment walls. The unit must be designed so that it has sufficient structural strength to prevent collapse or other failure. All surfaces to be in contact with hazardous wastes must be chemically compatible with those wastes. EPA will consider standards established by professional organizations generally recognized by the industry such as the American Concrete Institute (ACI) and the American Society of Testing Materials (ASTM) in judging the structural integrity requirements of this paragraph. If appropriate to the nature of the waste management operation to take place in the unit, an exception to the structural strength requirement may be made for light-weight doors and windows that meet these criteria:

(i) They provide an effective barrier against fugitive dust emissions under paragraph (c)(1)(iv); and

(ii) The unit is designed and operated in a fashion that assures that wastes will not actually come in contact with these openings.

(3) Incompatible hazardous wastes or treatment reagents must not be placed in the unit or its secondary containment system if they could cause the unit or secondary containment system to leak, corrode, or otherwise fail.

(4) A containment building must have a primary barrier designed to withstand the movement of personnel, waste, and handling equipment in the unit during the operating life of the unit and appropriate for the physical and chemical characteristics of the waste to be managed.

(b) For a containment building used to manage hazardous wastes containing free liquids or treated with free liquids (the presence of which is determined by the paint filter test, a visual examination, or other appropriate means), the owner or operator must include:

(1) A primary barrier designed and constructed of materials to prevent the migration of hazardous constituents into the barrier (e.g., a geomembrane covered by a concrete wear surface).

(2) A liquid collection and removal system to minimize the accumulation of liquid on the primary barrier of the containment building:

(i) The primary barrier must be sloped to drain liquids to the associated collection system; and

(ii) Liquids and waste must be collected and removed to minimize hydraulic head on the containment system at the earliest practicable time.

(3) A secondary containment system including a secondary barrier designed and constructed to prevent migration of hazardous constituents into the barrier, and a leak detection system that is capable of detecting failure of the primary barrier and collecting accumulated hazardous wastes and liquids at the earliest practicable time.

(i) The requirements of the leak detection component of the secondary containment system are satisfied by installation of a system that is, at a minimum:

(A) Constructed with a bottom slope of 1 percent or more; and

(B) Constructed of a granular drainage material with a hydraulic conductivity of 1×10^{-2} cm/sec or more and a thickness of 12 inches (30.5 cm) or more, or constructed of synthetic or geonet drainage materials with a transmissivity of 3×10^{-5} m^2/sec or more.

(ii) If treatment is to be conducted in the building, an area in which such treatment will be conducted must be designed to prevent the release of liquids, wet materials, or liquid aerosols to other portions of the building.

(iii) The secondary containment system must be constructed of materials that are chemically resistant to the waste and liquids managed in the containment building and of sufficient strength and thickness to prevent collapse under the pressure exerted by overlaying materials and by any equipment used in the containment building. (Containment buildings can serve as secondary containment systems for tanks placed within the building under certain conditions. A containment building can serve as an external liner system for a tank, provided it meets the requirements of § 264.193(d)(1). In addition, the containment building must meet the requirements of § 264.193(b) and §§ 264.193(c) (1) and (2) to be considered an acceptable secondary containment system for a tank.)

(4) For existing units other than 90-day generator units, the Regional Administrator may delay the secondary containment requirement for up to two years, based on a demonstration by the owner or operator that the unit substantially meets the standards of this subpart. In making this demonstration, the owner or operator must:

(i) Provide written notice to the Regional Administrator of their request by November 16, 1992. This notification must describe the unit and its operating practices with specific reference to the performance of existing containment systems, and specific plans for retrofitting the unit with secondary containment;

(ii) Respond to any comments from the Regional Administrator on these plans within 30 days; and

(iii) Fulfill the terms of the revised plans, if such plans are approved by the Regional Administrator.

(c) Owners or operators of all containment buildings must:

(1) Use controls and practices to ensure containment of the hazardous waste within the unit; and, at a minimum:

(i) Maintain the primary barrier to be free of significant cracks, gaps, corrosion, or other deterioration that could cause hazardous waste to be released from the primary barrier;

(ii) Maintain the level of the stored/treated hazardous waste within the containment walls of the unit so that the height of any containment wall is not exceeded;

(iii) Take measures to prevent the tracking of hazardous waste out of the unit by personnel or by equipment used in handling the waste. An area must be designated to decontaminate equipment and any rinsate must be collected and properly managed; and

(iv) Take measures to control fugitive dust emissions such that any openings (doors, windows, vents, cracks, etc.) exhibit no visible emissions (see 40 CFR part 60, appendix A, Method 22—Visual Determination of Fugitive Emissions from Material Sources and Smoke Emissions from Flares). In addition, all associated particulate collection devices (e.g., fabric filter, electrostatic precipitator) must be operated and maintained with sound air pollution control practices (see 40 CFR part 60 subpart 292 for guidance). This state of no visible emissions must be maintained effectively at all times during routine operating and maintenance conditions, including when vehicles and personnel are entering and exiting the unit.

(2) Obtain certification by a qualified registered professional engineer that the containment building design meets the requirements of paragraphs (a) through (c) of this section. For units placed into operation prior to February 18, 1993, this certification must be placed in the facility's operating record (on-site files for generators who are not formally required to have operating records) no later than 60 days after the date of initial operation of the unit. After February 18, 1993, PE certification will be required prior to operation of the unit.

(3) Throughout the active life of the containment building, if the owner or operator detects a condition that could lead to or has caused a release of hazardous waste, must repair the condition promptly, in accordance with the following procedures.

(i) Upon detection of a condition that has lead to a release of hazardous waste (e.g., upon detection of leakage from the primary barrier) the owner or operator must:

(A) Enter a record of the discovery in the facility operating record;

(B) Immediately remove the portion of the containment building affected by the condition from service;

(C) Determine what steps must be taken to repair the containment building, remove any leakage from the secondary collection system, and establish a schedule for accomplishing the cleanup and repairs; and

(D) Within 7 days after the discovery of the condition, notify the Regional Administrator of the condition, and within 14 working days, provide a written notice to the Regional Administrator with a description of the steps taken to repair the containment building, and the schedule for accomplishing the work.

(ii) The Regional Administrator will review the information submitted, make a determination regarding whether the containment building must be removed from service completely or partially until repairs and cleanup are complete, and notify the owner or operator of the determination and the underlying rationale in writing.

(iii) Upon completing all repairs and cleanup the owner or operator must notify the Regional Administrator in writing and provide a verification, signed by a qualified, registered professional engineer, that the repairs and cleanup have been completed according to the written plan submitted in accordance with paragraph (c)(3)(i)(D) of this section.

(4) Inspect and record in the facility's operating record, at least once every seven days, data gathered from monitoring equipment and leak detection equipment as well as the containment building and the area immediately surrounding the containment building to detect signs of releases of hazardous waste.

(d) For containment buildings that contain areas both with and without secondary containment, the owner or operator must:

(1) Design and operate each area in accordance with the requirements enumerated in paragraphs (a) through (c) of this section;

(2) Take measures to prevent the release of liquids or wet materials into areas without secondary containment; and

(3) Maintain in the facility's operating log a written description of the operating procedures used to maintain the integrity of areas without secondary containment.

(e) Notwithstanding any other provision of this subpart the Regional Administrator may waive requirements for secondary containment for a permitted containment building where the owner operator demonstrates that the only free liquids in the unit are limited amounts of dust suppression liquids required to meet occupational health and safety requirements, and where containment of managed wastes and liquids can be assured without a secondary containment system.

§ 264.1102 Closure and post-closure care.

(a) At closure of a containment building, the owner or operator must remove or decontaminate all waste residues, contaminated containment system components (liners, etc.,) contaminated subsoils, and structures and equipment contaminated with waste and leachate, and manage them as hazardous waste unless § 261.3(d) of this chapter applies. The closure plan, closure activities, cost estimates for closure, and financial responsibility for containment buildings must meet all of the requirements specified in subparts G and H of this part.

(b) If, after removing or decontaminating all residues and making all reasonable efforts to effect removal or decontamination of contaminated components, subsoils, structures, and equipment as required in paragraph (a) of this section, the owner or operator finds that not all contaminated subsoils can be practicably removed or decontaminated, he must close the facility and perform post-closure care in accordance with the closure and post-closure requirements that apply to landfills (§ 264.310). In addition, for the purposes of closure, post-closure, and financial responsibility, such a containment building is then considered to be a landfill, and the owner or operator must meet all of the requirements for landfills specified in subparts G and H of this part.

§ 264.1103–264.1110 [Reserved]

PART 265—INTERIM STATUS STANDARDS FOR OWNERS AND OPERATORS OF HAZARDOUS WASTE TREATMENT, STORAGE, AND DISPOSAL FACILITIES

18. The authority citation for part 265 continues to read as follows:

Authority: 42 U.S.C. 6905, 6912(a), 6924, 6925, 6935, and 6936.

19. Section 265.110 is amended by removing the word "and" from the end of paragraphs (b)(1) and (b)(2), by adding "; and" in place of the period at the end of paragraph (b)(3), and by adding a new paragraph (b)(4) to read as follows:

§ 265.110 Applicability.

* * * * *

(b) * * *

(4) Containment building that are required under § 265.1102 to meet the requirement for landfills.

20. Section 265.111 is amended by revising paragraph (c) to read as follows:

§ 265.111 Closure performance standard.

* * * * *

(c) Complies with the closure requirements of this subpart, including, but not limited to, the requirements of §§ 265.197, 265.228, 265.258, 265.280, 265.310, 265.351, 265.381, 265.404, and 264.1102.

21. In § 265.112 (d)(4), the last two sentences are revised to read as follows:

§ 265.112 Closure plan; amendment of plan.

* * * * *

(d) * * *

(4) * * * The Regional Administrator must assure that the approved plan is consistent with §§ with 265.111 through 265.115 and the applicable requirements of subpart F of this part, §§ 265.197, 265.228, 265.258, 265.280, 265.310, 265.351, 265.381, 265.404, and 264.1102. A copy of the modified plan with a detailed statement of reasons for the modifications must be mailed to the owner or operator.

* * * * *

22. Section 265.140 is amended by revising paragraph (b) to read as follows:

§ 265.140 Applicability.

(b) The requirements of §§ 265.144 and 265.146 apply only to owners and operators of:

(1) Disposal facilities;

(2) Tank systems that are required under § 264.197 of this chapter to meet the requirements for landfills; and

(3) Containment buildings that are required under § 265.1102 to meet the requirements for landfills.

* * * * *

23. Section 265.142 is amended by revising the introductory text of paragraph (a) to read as follows:

§ 265.142 Cost estimate for closure.

(a) The owner or operator must have a detailed written estimate, in current dollars, of the cost of closing the facility in accordance with the requirements in §§ 265.111 through 265,115 and applicable closure requirements in §§ 265.178, 265.197, 265.228, 265.258, 265.280, 265.310, 265.351, 265.381, 265.404, and 265.1102

* * * * *

24. In § 265.221, a new paragraph (h) is added to read as follows:

§ 265.221 Design and operating requirements.

* * * * *

(h) Surface impoundments that are newly subject to RCRA section 3005(j)(1) due to the promulgation of additional listings or characteristics for the identification of hazardous waste must be in compliance with paragraphs (a), (c) and (d) of this section not later than 48 months after the promulgation of the additional listing or characteristic. This compliance period shall not be cut short as the result of the promulgation of land disposal prohibitions under part 268 of this chapter or the granting of an extension to the effective date of a prohibition pursuant to § 268.5 of this chapter, within this 48-month period.

25. Subpart CC is added and reserved and subpart DD is added to part 265 to read as follows:

Subpart DD—Containment Buildings

Sec.

265.1100 Applicability.

265.1101 Design and operating standards.

Sec.
265.1102 Closure and post-closure care.
265.1103 –265.1110 [Reserved]

Subpart DD—Containment Buildings

§ 265.1100 Applicability.

The requirements of this subpart apply to owners or operators who store or treat hazardous waste in units designed and operated under § 265.1101 of this subpart. These provisions will become effective on February 18, 1993, although the owner or operator may notify the Regional Administrator of his intent to be bound by this subpart at an earlier time. The owner or operator is not subject to the definition of land disposal in RCRA section 3004(k) provided that the unit:

(a) Is a completely enclosed, self-supporting structure that is designed and constructed of manmade materials of sufficient strength and thickness to support themselves, the waste contents, and any personnel and heavy equipment that operate within the units, and to prevent failure due to pressure gradients, settlement, compression, or uplift, physical contact with the hazardous wastes to which they are exposed; climatic conditions; and the stresses of daily operation, including the movement of heavy equipment within the unit and contact of such equipment with containment walls;

(b) Has a primary barrier that is designed to be sufficiently durable to withstand the movement of personnel and handling equipment within the unit;

(c) If the unit is used to manage liquids, has:

(1) A primary barrier designed and constructed of materials to prevent migration of hazardous constituents into the barrier;

(2) A liquid collection system designed and constructed of materials to minimize the accumulation of liquid on the primary barrier; and

(3) A secondary containment system designed and constructed of materials to prevent migration of hazardous constituents into the barrier, with a leak detection and liquid collection system capable of detecting, collecting, and removing leaks of hazardous constituents at the earliest possible time, unless the unit has been granted a variance from the secondary containment system requirements under § 265.1101(b)(4);

(d) Has controls as needed to permit fugitive dust emissions; and

(e) Is designed and operated to ensure containment and prevent the tracking of materials from the unit by personnel or equipment.

§ 265.1101 Design and operating standards.

(a) All containment buildings must comply with the following design standards:

(1) The containment building must be completely enclosed with a floor, walls, and a roof to prevent exposure to the elements, (e.g., precipitation, wind, run-on), and to assure containment of managed wastes.

(2) The floor and containment walls of the unit, including the secondary containment system if required under paragraph (b) of this section, must be designed and constructed of materials of sufficient strength and thickness to support themselves, the waste contents, and any personnel and heavy equipment that operate within the unit, and to prevent failure due to pressure gradients, settlement, compression, or uplift, physical contact with the hazardous wastes to which they are exposed; climatic conditions; and the stresses of daily operation, including the movement of heavy equipment within the unit and contact of such equipment with containment walls. The unit must be designed so that it has sufficient structural strength to prevent collapse or other failure. All surfaces to be in contact with hazardous wastes must be chemically compatible with those wastes. EPA will consider standards established by professional organizations generally recognized by the industry such as the American Concrete Institute (ACI) and the American Society of Testing Materials (ASTM) in judging the structural integrity requirements of this paragraph. If appropriate to the nature of the waste management operation to take place in the unit, an exception to the structural strength requirement may be made for light-weight doors and windows that meet these criteria:

(i) They provide an effective barrier against fugitive dust emissions under paragraph (c)(1)(iv); and

(ii) The unit is designed and operated in a fashion that assures that wastes will not actually come in contact with these openings.

(3) Incompatible hazardous wastes or treatment reagents must not be placed in the unit or its secondary containment system if they could cause the unit or secondary containment system to leak, corrode, or otherwise fail.

(4) A containment building must have a primary barrier designed to withstand the movement of personnel, waste, and handling equipment in the unit during the operating life of the unit and appropriate for the physical and chemical characteristics of the waste to be managed.

(b) For a containment building used to manage hazardous wastes containing free liquids or treated with free liquids (the presence of which is determined by the paint filter test, a visual examination, or other appropriate means), the owner or operator must include:

(1) A primary barrier designed and constructed of materials to prevent the migration of hazardous constituents into the barrier (e.g. a geomembrane covered by a concrete wear surface).

(2) A liquid collection and removal system to prevent the accumulation of liquid on the primary barrier of the containment building:

(i) The primary barrier must be sloped to drain liquids to the associated collection system; and

(ii) Liquids and waste must be collected and removed to minimize hydraulic head on the containment system at the earliest practicable time that protects human health and the environment.

(3) A secondary containment system including a secondary barrier designed and constructed to prevent migration of hazardous constituents into the barrier, and a leak detection system that is capable of detecting failure of the primary barrier and collecting accumulated hazardous wastes and liquids at the earliest practicable time.

(i) The requirements of the leak detection component of the secondary containment system are satisfied by installation of a system that is, at a minimum:

(A) Constructed with a bottom slope of 1 percent or more; and

(B) Constructed of a granular drainage material with a hydraulic conductivity of 1×10^{-2} cm/sec or more and a thickness of 12 inches (30.5 cm) or more, or constructed of synthetic or geonet drainage materials with a trasmissivity of 3×10^{-5} m^2 / sec or more.

(ii) If treatment is to be conducted in the building, an area in which such treatment will be conducted must be designed to prevent the release of liquids, wet materials, or liquid aerosols to other portions of the building.

(iii) The secondary containment system must be constructed of materials that are chemically resistant to the waste and liquids managed in the containment building and of sufficient strength and thickness to prevent collapse under the pressure exerted by overlaying materials and by any equipment used in the containment building. (Containment buildings can serve as secondary containment systems for tanks placed within the building under certain conditions. A

containment building can serve as an external liner system for a tank, provided it meets the requirements of § 265.193(d)(1). In addition, the containment building must meet the requirements of § 265.193 (b) and (c) to be considered an acceptable secondary containment system for a tank.)

(4) For existing units other than 90-day generator units, the Regional Administrator may delay the secondary containment requirement for up to two years, based on a demonstration by the owner or operator that the unit substantially meets the standards of this Subpart. In making this demonstration, the owner or operator must:

(i) Provide written notice to the Regional Administrator of their request by February 18, 1993. This notification must describe the unit and its operating practices with specific reference to the performance of existing containment systems, and specific plans for retrofitting the unit with secondary containment;

(ii) Respond to any comments from the Regional Administrator on these plans within 30 days; and

(iii) Fulfill the terms of the revised plans, if such plans are approved by the Regional Administrator.

(c) Owners or operators of all containment buildings must:

(1) Use controls and practices to ensure containment of the hazardous waste within the unit; and, at a minimum:

(i) Maintain the primary barrier to be free of significant cracks, gaps, corrosion, or other deterioration that could cause hazardous waste to be released from the primary barrier;

(ii) Maintain the level of the stored/treated hazardous waste within the containment walls of the unit so that the height of any containment wall is not exceeded;

(iii) Take measures to prevent the tracking of hazardous waste out of the unit by personnel or by equipment used in handling the waste. An area must be designated to decontaminate equipment and any rinsate must be collected and properly managed; and

(iv) Take measures to control fugitive dust emissions such that any openings (doors, windows, vents, cracks, etc.) exhibit no visible emissions. In addition, all associated particulate collection devices (e.g., fabric filter, electrostatic precipitator) must be operated and maintained with sound air pollution control practices. This state of no visible emissions must be maintained effectively at all times during normal operating conditions, including when vehicles and personnel are entering and exiting the unit.

(2) Obtain certification by a qualified registered professional engineer that the containment building design meets the requirements of paragraphs (a) through (c) of this section. For units placed into operation prior to February 18, 1993, this certification must be placed in the facility's operating record (on-site files for generators who are not formally required to have operating records) no later than 60 days after the date of initial operation of the unit. After February 18, 1993, PE certification will be required prior to operation of the unit.

(3) Throughout the active life of the containment building, if the owner or operator detects a condition that could lead to or has caused a release of hazardous waste, must repair the condition promptly, in accordance with the following procedures.

(i) Upon detection of a condition that has led to a release of hazardous waste (e.g., upon detection of leakage from the primary barrier) the owner or operator must:

(A) Enter a record of the discovery in the facility operating record;

(B) Immediately remove the portion of the containment building affected by the condition from service;

(C) Determine what steps must be taken to repair the containment building, remove any leakage from the secondary collection system, and establish a schedule for accomplishing the cleanup and repairs; and

(D) Within 7 days after the discovery of the condition, notify the Regional Administrator of the condition, and within 14 working days, provide a written notice to the Regional Administrator with a description of the steps taken to repair the containment building, and the schedule for accomplishing the work.

(ii) The Regional Administrator will review the information submitted, make a determination regarding whether the containment building must be removed from service completely or partially until repairs and cleanup are complete, and notify the owner or operator of the determination and the underlying rationale in writing.

(iii) Upon completing all repairs and cleanup the owner or operator must notify the Regional Administrator in writing and provide a verification, signed by a qualified, registered professional engineer, that the repairs and cleanup have been completed according to the written plan submitted in accordance with paragraph (c)(3)(i)(D) of this section.

(4) Inspect and record in the facility's operating record, at least once every seven days, data gathered from monitoring equipment and leak detection equipment as well as the containment building and the area immediately surrounding the containment building to detect signs of releases of hazardous waste.

(d) For containment building that contains both areas with and without secondary containment, the owner or operator must:

(1) Design and operate each area in accordance with the requirements enumerated in paragraphs (a) through (c) of this section;

(2) Take measures to prevent the release of liquids or wet materials into areas without secondary containment; and

(3) Maintain in the facility's operating log a written description of the operating procedures used to maintain the integrity of areas without secondary containment.

(e) Notwithstanding any other provision of this subpart, the Regional Administrator may waive requirements for secondary containment for a permitted containment building where the owner or operator demonstrates that the only free liquids in the unit are limited amounts of dust suppression liquids required to meet occupational health and safety requirements, and where containment of managed wastes and liquids can be assured without a secondary containment system.

§ 265.1102 Closure and post-closure care.

(a) At closure of a containment building, the owner or operator must remove or decontaminate all waste residues, contaminated containment system components (liners, etc.), contaminated subsoils, and structures and equipment contaminated with waste and leachate, and manage them as hazardous waste unless § 261.3(d) of this chapter applies. The closure plan, closure activities, cost estimates for closure, and financial responsibility for containment buildings must meet all of the requirements specified in subparts G and H of this part.

(b) If, after removing or decontaminating all residues and making all reasonable efforts to effect removal or decontamination of contaminated components, subsoils, structures, and equipment as required in paragraph (a) of this section, the owner or operator finds that not all contaminated subsoils can be practicably removed or decontaminated, he must close the facility and perform post-closure care in accordance with the closure and post-closure requirements that apply to landfills (§ 265.310). In addition, for the purposes of closure,

post-closure, and financial responsibility, such a containment building is then considered to be a landfill, and the owner or operator must meet all of the requirements for landfills specified in subparts G and H of this part.

§§ 265.1103—265.1110 [Reserved]

PART 268—LAND DISPOSAL RESTRICTIONS

26. The authority citation for part 268 continues to read as follows:

Authority: 42 U.S.C. 6905, 6912(a), 6921, and 6924.

27. In § 268.2 paragraph (g) is revised and paragraph (h) added to read as follows:

§ 268.2 Definitions applicable in this part.

* * * * *

(g) *Debris* means solid material exceeding a 60 mm particle size that is intended for disposal and that is: A manufactured object; or plant or animal matter; or natural geologic material. However, the following materials are not debris: Any material for which a specific treatment standard is provided in subpart D, part 268; Process residuals such as smelter slag and residues from the treatment of waste, wastewater, sludges, or air emission residues; and Intact containers of hazardous waste that are not ruptured and that retain at least 75% of their original volume. A mixture of debris that has not been treated to the standards provided by § 268.45 and other material is subject to regulation as debris if the mixture is comprised primarily of debris, by volume, based on visual inspection.

(h) *Hazardous debris* means debris that contains a hazardous waste listed in subpart D of part 261 of this chapter, or that exhibits a characteristic of hazardous waste identified in subpart C of part 261 of this chapter.

28. Section 268.5 is amended by adding "; or" in place of the semicolon at the end of paragraph (h)(2)(ii), by redesignating paragraph (h)(2)(v) as paragraph (h)(2)(vi), by revising paragraph (h)(2)(iv) and by adding new paragraph (h)(2)(v) to read as follows:

§ 268.5 Procedures for case-by-case extensions to an effective date.

* * * * *

(h) * * *

(2) * * *

(iv) The surface impoundment, if permitted, is in compliance with the requirements of subpart F of part 264 and § 264.221 (c), (d) and (e) of this chapter; or

(v) The surface impoundment, if newly subject to RCRA section 3005(j)(1) due to the promulgation of additional listings or characteristics for the identification of hazardous waste, is in compliance with the requirements of subpart F of part 265 of this chapter within 12 months after the promulgation of additional listings or characteristics of hazardous waste, and with the requirements of § 265.221 (a), (c) and (d) of this chapter within 48 months after the promulgation of additional listings or characteristics of hazardous waste. If a national capacity variance is granted, during the period the variance is in effect, the surface impoundment, if newly subject to RCRA section 3005(j)(1) due to the promulgation of additional listings or characteristics of hazardous waste, is in compliance with the requirements of subpart F of part 265 of this chapter within 12 months after the promulgation of additional listings or characteristics of hazardous waste, and with the requirements of § 265.221 (a), (c) and (d) of this chapter within 48 months after the promulgation of additional listings or characteristics of hazardous waste; or

* * * * *

29. Section 268.7 is amended by revising paragraphs (a)(1)(iii), (a)(1)(iv), (a)(2) introductory text, (a)(3)(iv), (a)(3)(v), (a)(4) introductory text, (b)(4) introductory text, and (b)(5) introductory text, and by adding paragraphs (a)(1)(v), (a)(3)(vi), and (d) to read as follows:

§ 268.7 Waste analysis and recordkeeping.

(a) * * *

(1) * * *

(iii) The manifest number associated with the shipment of waste;

(iv) For hazardous debris, the contaminants subject to treatment as provided by § 268.45(b) and the following statement: "This hazardous debris is subject to the alternative treatment standards of 40 CFR 268.45"; and

(v) Waste analysis data, where available.

(2) If a generator determines that he is managing a restricted waste under this Part, and determines that the waste can be land disposed without further treatment, with each shipment of waste he must submit, to the treatment, storage, or land disposal facility, a notice and a certification stating that the waste meets the applicable treatment standards set forth in subpart D of this part and the applicable prohibition levels set forth in § 268.32 or RCRA section 3004(d). Generators of hazardous debris that is excluded from the definition of hazardous waste under § 261.3(e)(2) of this chapter (i.e., debris that the Director has determined does not contain hazardous waste), however, are not subject to these notification and certification requirements.

* * * * *

(3) * * *

(iv) Waste analysis data, where available;

(v) For hazardous debris, the contaminants subject to treatment as provided by § 268.45(b) and the following statement: "This hazardous debris is subject to the alternative treatment standards of 40 CFR 268.45"; and

(vi) The date the waste is subject to the prohibitions.

(4) If a generator is managing prohibited waste in tanks, containers, or containment buildings regulated under 40 CFR 262.34, and is treating such waste in such tanks, containers, or containment buildings to meet applicable treatment standards under subpart D of this part, the generator must develop and follow a written waste analysis plan which describes the procedures the generator will carry out to comply with the treatment standards. (Generators treating hazardous debris under the alternative treatment standards of Table 1, § 268.45, however, are not subject to these waste analysis requirements.) The plan must be kept on site in the generator's records, and the following requirements must be met:

* * * * *

(b) * * *

(4) A notice must be sent with each waste shipment to the land disposal facility which includes the following information, except that debris excluded from the definition of hazardous waste under § 261.3(e) of this chapter (i.e., debris treated by an extraction or destruction technology provided by Table 1, § 268.45, and debris that the Director has determined does not contain hazardous waste) is subject to the notification and certification requirements of paragraph (d) of this section rather than these notification requirements:

* * * * *

(5) The treatment facility must submit a certification with each shipment of waste or treatment residue of a restricted waste to the land disposal facility stating that the waste or treatment residue has been treated in compliance with the applicable performance standards specified in subpart D of this part and the applicable prohibitions set forth in § 268.32 or RCRA section 3004(d). Debris excluded from the definition of hazardous waste under § 261.3(e) of this chapter (i.e., debris treated by an extraction or destruction technology provided by

Table 1, § 268.45, and debris that the Director has determined does not contain hazardous waste), however, is subject to the notification and certification requirements of paragraph (d) of this section rather than the certification requirements of this paragraph (b)(5).

* * * * *

(d) Generators or treaters who first claim that hazardous debris is excluded from the definition of hazardous waste under § 261.3(e) of this chapter (i.e., debris treated by an extraction or destruction technology provided by Table 1, § 268.45, and debris that the Director has determined does not contain hazardous waste) are subject to the following notification and certification requirements:

(1) A one-time notification must be submitted to the Director or authorized State including the following information:

(i) The name and address of the Subtitle D facility receiving the treated debris;

(ii) A description of the hazardous debris as initially generated, including the applicable EPA Hazardous Waste Number(s); and

(iii) For debris excluded under § 261.3(e)(1) of this chapter, the technology from Table 1, § 268.45, used to treat the debris.

(2) The notification must be updated if the debris is shipped to a different facility, and, for debris excluded under § 261.2(e)(1) of this chapter, if a different type of debris is treated or if a different technology is used to treat the debris.

(3) For debris excluded under § 261.3(e)(1) of this chapter, the owner or operator of the treatment facility must document and certify compliance with the treatment standards of Table 1, § 268.45, as follows:

(i) Records must be kept of all inspections, evaluations, and analyses of treated debris that are made to determine compliance with the treatment standards;

(ii) Records must be kept of any data or information the treater obtains during treatment of the debris that identifies key operating parameters of the treatment unit; and

(iii) For each shipment of treated debris, a certification of compliance with the treatment standards must be signed by an authorized representative and placed in the facility's files. The certification must state the following: "I certify under penalty of law that the debris has been treated in accordance with the requirements of 40 CFR 268.45. I am aware that there are significant penalties for making a false certification, including the possibility of fine and imprisonment."

* * * * *

30. In § 268.9, paragraph (d) is revised to read as follows:

§ 268.9 Special rules regarding wastes that exhibit a characteristic.

* * * * *

(d) Wastes that exhibit a characteristic are also subject to § 268.7 requirements, except that once the waste is no longer hazardous, a one-time notification and certification must be placed in the generators or treaters files and sent to the EPA region or authorized state. The notification and certification that is placed in the generators or treaters files must be updated if the process or operation generating the waste changes and/or if the subtitle D facility receiving the waste changes. However, the generator or treater need only notify the EPA region or an authorized state on an annual basis if such changes occur. Such notification and certification should be sent to the EPA region or authorized state by the end of the calendar year, but no later that December 31.

(1) The notification must include the following information:

(i) Name and address of the Subtitle D facility receiving the waste shipment;

(ii) A description of the waste as initially generated, including the applicable EPA Hazardous Waste Number(s) and treatability group(s);

(iii) The treatment standards applicable to the waste at the point of generation.

(2) The certification must be signed by an authorized representative and must state the language found in § 268.7(b)(5).

31. Section 268.14 is added to subpart B of part 268 to read as follows:

§ 268.14 Surface impoundment exemptions.

(a) This section defines additional circumstances under which an otherwise prohibited waste may continue to be placed in a surface impoundment.

(b) Wastes which are newly identified or listed under section 3001 after November 8, 1984, and stored in a surface impoundment that is newly subject to subtitle C of RCRA as a result of the additional identification or listing, may continue to be stored in the surface impoundment for 48 months after the promulgation of the additional listing or characteristic, not withstanding that the waste is otherwise prohibited from land disposal, provided that the surface impoundment is in compliance with the requirements of subpart F of part 265 of this chapter within 12 months after promulgation of the new listing or characteristic.

(c) Wastes which are newly identified or listed under section 3001 after November 8, 1984, and treated in a surface impoundment that is newly subject to subtitle C of RCRA as a result of the additional identification or listing, may continue to be treated in that surface impoundment, not withstanding that the waste is otherwise prohibited from land disposal, provided that surface impoundment is in compliance with the requirements of subpart F of part 265 of this chapter within 12 months after the promulgation of the new listing or characteristic. In addition, if the surface impoundment continues to treat hazardous waste after 48 months from promulgation of the additional listing or characteristic, it must then be in compliance with § 268.4.

32. Section 268.36 is added to subpart C of part 268 to read as follows:

§ 268.36 Waste specific prohibitions—newly listed wastes.

(a) Effective November 9, 1992, the wastes specified in 40 CFR 261.32 as EPA Hazardous Waste Numbers K107, K108, K109, K110, K111, K112, K117, K118, K123, K124, K125, K126, K131, K132, and K136; and the wastes specified in 40 CFR 261.33(f) as EPA Hazardous Waste numbers U328, U353, and U359 are prohibited from land disposal.

(b) Effective June 30, 1993, the wastes specified in 40 CFR 261.31 as EPA Hazardous Waste Numbers F037 and F038 that are not generated from surface impoundment cleanouts or closures are prohibited from land disposal.

(c) Effective June 30, 1994, the wastes specified in 40 CFR 261.31 as EPA Hazardous Waste Numbers F037 and F038 that are generated from surface impoundment cleanouts or closures are prohibited from land disposal.

(d) Effective June 30, 1994, radioactive wastes that are mixed with hazardous wastes specified in 40 CFR 261.31 as EPA Hazardous Waste Numbers F037 and F038; the wastes specified in 40 CFR 261.32 as EPA Hazardous Waste Numbers K107, K108, K109, K110, K111, K112, K117, K118, K123, K124, K125, K126 K131, K132, and K136; or the wastes specified in 40 CFR 261.33(f) as EPA Hazardous Waste Numbers U328, U353, and U359 are prohibited from land disposal.

(e) Effective June 30, 1994, debris contaminated with hazardous wastes specified in 40 CFR 261.31 as EPA Hazardous Waste Numbers F037 and F038; the wastes specified in 40 CFR 261.32 as EPA Hazardous Waste

Numbers K107, K108, K109, K110, K111, K112, K117, K118, K123, K124, K125, K126 K131, K132, and K136; or the wastes specified in 40 CFR 261.33(f) as EPA Hazardous Waste Numbers U328, U353, and U359; and which is not contaminated with any other waste already subject to a prohibition are prohibited from land disposal.

(f) Between June 30, 1992 and June 30, 1993, the wastes included in paragraph (b) of this section may be disposed of in a landfill, only if such unit is in compliance with the requirements specified in § 268.5(h)(2), and may be generated in and disposed of in a surface impoundment only if such unit is in compliance with either § 268.5(h)(2) or § 268.14.

(g) Between June 30, 1992 and June 30, 1994, the wastes included in paragraphs (d) and (e) of this section may be disposed of in a landfill only if such unit is in compliance with the requirements specified in § 268.5(h)(2), and may be generated in and disposed of in a surface impoundment only if such unit is in compliance with either § 268.5(h)(2) or § 268.14.

(h) The requirements of paragraphs (a), (b), (c), (d), and (e) of this section do not apply if:

(1) The wastes meet the applicable standards specified in subpart D of this part;

(2) Persons have been granted an exemption from a prohibition pursuant to a petition under § 268.6, with respect to those wastes and units covered by the petition;

(3) The wastes meet the applicable alternate standards established pursuant to a petition granted under § 268.44;

(4) Persons have been granted an extension to the effective date of a prohibition pursuant to § 268.5, with respect to the wastes covered by the extension.

(i) To determine whether a hazardous waste identified in this section exceeds the applicable treatment standards specified in §§ 268.41 and 268.43, the initial generator must test a representative sample of the waste extract or the entire waste, depending on whether the treatment standards are expressed as concentrations in the waste extract or the waste, or the generator may use knowledge of the waste. If the waste contains constituents in excess of the applicable levels in subpart D of this part, the waste is prohibited from land disposal, and all requirements of part 268 are applicable, except as otherwise specified.

33. In § 268.40, paragraph (b) is revised and paragraph (d) is added to read as follows:

§ 268.40 Applicability of treatment standards.

* * * * *

(b) A restricted waste for which a treatment technology is specified under § 268.42(a) or hazardous debris for which a treatment technology is specified under § 268.45 may be land disposed after it is treated using that specified technology or an equivalent treatment method approved by the Administrator under the procedures set forth in § 268.42(b).

* * * * *

(d) If a treatment standard has been established in §§ 268.41 through 268.43 for a hazardous waste that is itself hazardous debris, the waste is subject to those standards rather than the standards for hazardous debris under § 268.45.

34. In § 268.41, paragraph (a) text preceding table is revised, and Table CCWE is amended by revising the entry for "F001–F005 spent solvents," by removing the entries for "K061 (Low Zinc Subcategory—less than 15% Total Zinc)" and "K061 (High Zinc Subcategory—greater than 15% Total Zinc)—Effective until August 7, 1991, by adding entries for "F037", "F038", and "K061", and by adding paragraph (c) to read as follows:

§ 268.41 Treatment standards expressed as concentrations in waste extract.

(a) Table CCWE identifies the restricted wastes and the concentrations of their associated constituents which may not be exceeded in the extract of a waste or waste treatment residual extracted using the test method in appendix I of this part for the allowable land disposal of such wastes. Compliance with these concentrations is required based upon grab samples.

268.41 TABLE CCWE.—CONSTITUENT CONCENTRATIONS IN WASTE EXTRACT

Waste code	Commercial chemical name	See also	Regulated hazardous constituent	CAS No. for regulated hazardous constituent	Wastewaters		Non-wastewaters	
					Concentration (mg/l)	Notes	Concentration (mg/l)	Notes
*	*	*	*	*	*		*	
F001–F005 spent solvents	NA	Table CCW in 268.43	Carbon disulfide	75–15–0	NA		4.8	
			Cyclohexanone	108–94–1	NA		0.75	
			Methanol	67–56–1	NA		0.75	
*	*	*	*	*	*		*	
F037	NA	Table CCW in 268.43	Chromium (Total)	7440–47–32	NA		1.7	
			Nickel	7440–02–0	NA		0.20	
F038	NA	Table CCW in 268.43	Chromium (Total)	7440–47–32	NA		1.7	
			Nickel	7440–02–0	NA		0.20	
*	*	*	*	*	*		*	
K061	NA	Table CCW in 268.43	Antimony	7440–36–0	NA		2.1	
			Arsenic	7440–38–2	NA		0.055	
			Barium	7440–39–3	NA		7.6	
			Beryllium	7440–41–7	NA		0.014	
			Cadmium	7440–43–9	NA		0.19	
			Chromium (Total)	7440–47–32	NA		0.33	
			Lead	7439–92–1	NA		0.37	
			Mercury	7439–97–6	NA		0.009	
			Nickel	7440–02–0	NA		5	
			Selenium	7782–49–2	NA		0.16	
			Silver	7440–22–4	NA		0.3	
			Thallium		NA		0.078	
			Zinc	7440–66–6	NA		5.3	
*	*	*	*	*	*		*	

* * * * *

(c) The treatment standards for the constituents in F001–F005 which are listed in Table CCWE only apply to wastes which contain one, two, or all three of these constituents. If the waste contains any of these three constituents along with any of the other 26 constituents found in F001–F005, then only the treatment standards in § 268.43 Table CCW are required.

35–36. In § 268.42, Table 2 of paragraph (a) is amended by adding entries for K107, K108, K109, K110, K112, K123, K124, K125, K126, U328, U353, and U359 in alphanumerical order and paragraphs (b) and (d) are revised to read as follows:

§ 268.42 Treatment standards expressed as specified technologies.

* * * * *

268.42 TABLE 2.—TECHNOLOGY-BASED STANDARDS BY RCRA WASTE CODE

Waste code	See also	Waste descriptions and/or treatment subcategory	CAS No. for regulated hazardous constituents	Technology code	
				Wastewaters	Nonwastewaters
*		* * *	*	*	*
K107		Column bottoms from product separation from the production of 1,1-dimethylhydrazine (UDMH) from carboxylic acid hydrazides.	NA	INCIN; or CHOXD fb, CARBN; or BIODG fb CARBN.	INCIN.
K108		Condensed column overheads from product separation and condensed reactor vent gases from the production of 1,1-dimethylhydrazine (UDMH) from carboxylic acid hydrazides.	NA	INCIN; or CHOXD fb, CARBN; or BIODG fb CARBN.	INCIN.
K109		Spent filter cartridges from product purification from the production of 1,1-dimethylhydrazine (UDMH) from carboxylic acid hydrazides.	NA	INCIN; or CHOXD fb, CARBN; or BIODG fb CARBN.	INCIN.
K110		Condensed column overheads from intermediate separation from the production of 1,1-dimethylhydrazine (UDMH) from carboxylic acid hydrazides.	NA	INCIN; or CHOXD fb, CARBN; or BIODG fb CARBN.	INCIN.
K112		Reaction by-product water from the drying column in the production of toluenediamine via hydrogenation of dinitrotoluene.	NA	INCIN; or CHOXD fb, CARBN; or BIODG fb CARBN.	INCIN.
*		* * *	*	*	*
K123		Process wastewater (including supernates, filtrates, and washwaters) from the production of ethylenebisdithiocarbamic acid and its salts.	NA	INCIN; or CHOXD fb (BIODG or CARBN).	INCIN.
K124		Reactor vent scrubber water from the production of ethylenebisdithiocarbamic acid and its salts.	NA	INCIN; or CHOXD fb (BIODG or CARBN).	INCIN.
K125		Filtration, evaporation, and centrifugation solids from the production of ethylenebisdithiocarbamic acid and its salts.	NA	INCIN; or CHOXD fb (BIODG or CARBN).	INCIN.
K126		Baghouse dust and floor sweepings in milling and packaging operations from the production or formulation of ethylene bisdithiocarbamic acid and its salts.	NA	INCIN; or CHOXD fb (BIODG or CARBN).	INCIN.
*		* * *	*	*	*
U328		o-toluidine	95–53–4	INCIN; or CHOXD fb, (BIODG or CARBN); or BIODG fb CARBN.	INCIN; or Thermal Destruction.
U353		p-toluidine	106–49–0	INCIN; or CHOXD fb, (BIODG or CARBN); or BIODG fb CARBN.	INCIN; or Thermal Destruction.
U359		2-ethoxy-ethanol	110–80–5	INCIN; or CHOXD fb, (BIODG or CARBN); or BIODG fb CARBN.	INCIN; or FSUBS.
*		* * *	*	*	*

(b) Any person may submit an application to the Administrator demonstrating that an alternative treatment method can achieve a measure of performance equivalent to that achieved by methods specified in paragraphs (a), (c), and (d) of this section for wastes or specified in Table 1 of § 268.45 for hazardous debris. The applicant must submit information demonstrating that his treatment method is in compliance with federal, state, and local requirements and is protective of human health and the environment. On the basis of such information and any other available information, the Administrator may approve the use of the alternative treatment method if he finds that the alternative treatment method provides a measure of performance equivalent to that achieved by methods specified in paragraphs (a), (c), and (d) of this section for wastes or in Table 1 of § 268.45 for hazardous debris. Any approval must be stated in writing and may contain such provisions and conditions as the Administrator deems appropriate. The person to whom such approval is issued must comply with all limitations contained in such a determination.

* * * * *

(d) Radioactive hazardous mixed wastes with treatment standards specified in Table 3 of this section are not subject to any treatment standards specified in §§ 268.41 or 268.43, or Table 2 of this section. Radioactive hazardous mixed wastes not subject to treatment standards in Table 3 of this section remain subject to all applicable treatment standards specified in §§ 268.41, 268.43, and Table 2 of this section. Hazardous debris containing radioactive waste is not subject to the treatment standards specified in Table 3 of this section but is subject to the treatment standards specified in § 268.45.

37. In § 268.43(a) Table CCW is amended by revising the entries for F001–F005 spent solvents, K015, K016, K018, K019, K020, K023, K024, K028, K030, K043, K048, K049, K050, K051, K052, K087, K093, K094, U028, U069, U088, U102, U107, and U190, by removing the entry for U042, and by

adding the entries for F037, F038, K117, K118, K131, K132, and K136 in alphanumerical order to read as follows:

§ 268.43 Treatment standards expressed as waste concentrations.

(a) * * *

268.43.—TABLE CCW.—CONSTITUENT CONCENTRATIONS IN WASTES

Waste code	Commercial chemical name	See also	Regulated hazardous constituent	CAS number for regulated hazardous constituent	Wastewaters		Nonwastewaters	
					Concentration (mg/l)	Notes	Concentration (mg/l)	Notes
*	*	*	*	*	*		*	
F001–F005 spent solvents.	NA		Acetone	67-64-1	0.28		160	
			Benzene	71-43-2	0.070		3.7	(1)
			n-Butyl alcohol	71-36-3	5.6		2.6	
			Carbon tetrachloride	56-23-5	0.057		5.6	
			Chlorobenzene	108-90-7	0.057		5.7	
			Cresol (m- and p-isomers)		0.77		3.2	
			o-cresol		0.11		5.6	
			o-Dichlorobenzene	95-50-1	0.088		6.2	
			Ethyl acetate	141-7-6	0.34		33	
			Ethyl benzene	100-41-4	0.057		6.0	
			Ethyl ether	60-29-7	0.12		160	
			Isobutyl alcohol	78-83-1	5.6		170	
			Methylene chloride	75-9-2	0.089		33	
			Methyl ethyl ketone	78-93-3	0.28		36	
			Methyl isobutyl ketone	108-10-1	0.14		33	
			Nitrobenzene	98-95-3	0.068		14	
			Pyridine	110-86-1	0.014		16	
			Tetrachloroethylene	127-18-4	0.056		5.6	
			Toluene	108-88-3	0.08		28	
			1,1,1-Trichloroethane	71-55-6	0.054		5.6	
			1,1,2-Trichloroethane	79-00-5	0.030		7.6	(1)
			Trichloroethylene	79-01-6	0.054		5.6	
			1,1,2-Trichloro-1,2,2-trifluoromethane.	76-13-1	0.057		28	
			Trichloromonofluoromethane.	75-69-4	0.02		33	
			Xylenes (total)		0.32		28	
*	*	*	*	*	*		*	
F037	NA	Table CCWE in 268.41.	Acenaphthene	208-96-8	0.059	(2)	NA	
			Anthracene	120-12-7	0.059	(2)	28	(1)
			Benzene	71-43-2	0.14	(2)	14	(1)
			Benzo(a)anthracene	50-32-8	0.059	(2)	20	(1)
			Benzo(a)pyrene	117-81-7	0.061	(2)	12	(1)
			Bis(2-ethylhexyl) phthalate	75-15-0	0.28	(2)	7.3	(1)
			Chrysene	218-01-9	0.059	(2)	15	(1)
			Di-n-butyl phthalate	105-67-9	0.057	(2)	3.6	(1)
			Ethylbenzene	100-41-4	0.057	(2)	14	(1)
			Fluorene	86-73-7	0.059	(2)	NA	
			Naphthalene	91-20-3	0.059	(2)	42	(1)
			Phenanthrene	85-01-8	0.059	(2)	34	(1)
			Phenol	108-95-2	0.039	(2)	3.6	(1)
			Pyrene	129-00-0	0.067	(2)	36	(1)
			Toluene	108-88-3	0.08	(2)	14	(1)
			Xylene(s)		0.32	(2)	22	(1)
			Cyanides (Total)	57-12-5	0.028	(1)	1.8	(1)
			Chromium (Total)	7440-47-32	0.2		NA	
			Lead	7439-92-1	0.037		NA	
F038	NA	Table CCWE in 268.41.	Benzene	71-43-2	0.14	(2)	14	(1)
			Benzo(a)pyrene	50-32-8	0.061	(2)	12	(1)
			Bis(2-ethylhexyl) phthalate	117-81-7	0.28	(2)	7.3	(1)
			Chrysene	218-01-9	0.059	(2)	15	(1)
			Di-n-butyl phthalate	84-74-2	0.057	(2)	3.6	(1)
			Ethylbenzene	100-41-4	0.057	(2)	14	(1)
			Fluorene	86-73-7	0.059	(2)	NA	
			Naphthalene	91-20-3	0.059	(2)	42	(1)
			Phenanthrene	85-01-8	0.059	(2)	34	(1)
			Phenol	108-95-2	0.039	(2)	3.6	(1)
			Pyrene	129-00-0	0.067	(2)	36	(1)
			Toluene	108-88-3	0.080	(2)	14	(1)
			Xylene(s)		0.32	(2)	22	(1)
			Cyanides (Total)	57-12-5	0.028	(1)	1.8	(1)
			Chromium (Total)	7440-47-32	0.2		NA	
			Lead	7439-92-1	0.037		NA	
*	*	*	*	*	*		*	
K015	NA	Table CCWE in 268.41.	Anthracene	120-12-7	0.059		3.4	(1)
			Benzal Chloride	98-87-3	0.28		6.2	(1)

268.43.—TABLE CCW.—CONSTITUENT CONCENTRATIONS IN WASTES—Continued

Waste code	Commercial chemical name	See also	Regulated hazardous constituent	CAS number for regulated hazardous constituent	Wastewaters		Nonwastewaters	
					Concentration (mg/l)	Notes	Concentration (mg/l)	Notes
			Sum of Benzo(b) fluoranthene and Benzo(k) fluoranthene.	207-08-9	0.055		3.4	.....
			Phenanthrene	85-01-8	0.059		3.4	(1)
			Toluene	108-88-3	0.08		6.0	(1)
			Chromium (Total)	7440-47-32	0.32		NA	.....
			Nickel	7440-02-0	0.44		NA	.....
K016	NA		Hexachlorobenzene	118-74-1	0.055		28	(1)
			Hexachlorobutadiene	87-68-3	0.055		5.6	(1)
			Hexachlorocyclopentadiene.	77-47-4	0.057		5.6	(1)
			Hexachloroethane	67-72-1	0.055		28	(1)
			Tetrachloroethene	127-18-4	0.056		6.0	(1)
*	*	*	*	*	*		*	
K018	NA		Chloroethane	76-00-3	0.27		6.0	(1)
			Chloromethane	74-87-3	0.19		NA	.....
			1,1-Dichloroethane	75-34-3	0.059		6.0	(1)
			1,2-Dichloroethane	107-06-2	0.21		6.0	(1)
			Hexachlorobenzene	118-74-1	0.055		28	(1)
			Hexachlorobutadiene	87-68-3	0.055		5.6	(1)
			Pentachloroethane	76-01-7	NA		5.6	.....
			1,1,1-Trichloroethane	71-55-6	0.054		6.0	.....
			Hexachloroethane	67-72-1	0.055		28	(1)
K019	NA		Bis(2-chloroethyl) ether	111-44-4	0.033		5.6	(1)
			Chlorobenzene	108-90-7	0.057		6.0	(1)
			Chloroform	67-66-3	0.046		6.0	(1)
			p-Dichlorobenzene	106-46-7	0.09		NA	.....
			1,2-Dichloroethane	107-06-2	0.21		6.0	(1)
			Fluorene	86-73-7	0.059		NA	.....
			Hexachloroethane	67-72-1	0.055		28	(1)
			Naphthalene	91-20-3	0.059		5.6	(1)
			Phenanthrene	85-01-8	0.059		5.6	(1)
			1,2,4,5-Tetrachlorobenzene.	95-94-3	0.055		NA	.....
			Tetrachloroethene	127-18-4	0.056		6.0	(1)
			1,2,4-Trichlorobenzene	120-82-1	0.055		19	(1)
			1,1,1-Trichloroethane	71-55-6	0.054		6.0	(1)
K020	NA		1,2-Dichloroethane	106-93-4	0.21		6.0	(1)
			1,1,2,2-Tetrachloroethane	79-34-6	0.057		5.6	(1)
			Tetrachloroethene	127-18-4	0.056		6.0	(1)
*	*	*	*	*	*		*	
K023	NA		Phthalic anhydride (measured as Phthalic acid).	85-44-9	0.069		28	(1)
K024	NA		Phthalic anhydride (measured as Phthalic acid).	85-44-9	0.069		28	(1)
K028	NA	Table CCWE in 268.41.	1,1-Dichloroethane trans-1,2-.	75-34-3	0.059		6.0	(1)
			Dichloroethane		0.054		6.0	(1)
			Hexachlorobutadiene	87-68-3	0.055		5.6	(1)
			Hexachloroethane	67-72-1	0.055		28	(1)
			Pentachloroethane	76-01-7	NA		5.6	(1)
			1,1,1,2-Tetrachloroethane	630-20-6	0.057		5.6	(1)
			1,1,2,2-Tetrachloroethane	79-34-6	0.057		5.6	(1)
			1,1,1,-Trichloroethane	71-55-6	0.054		6.0	(1)
			1,1,2-Trichloroethane	79-00-5	0.054		6.0	(1)
			Tetrachloroethylene	127-18-4	0.056		6.0	(1)
			Cadmium	7440-43-9	6.4		NA	.....
			Chromium (Total)	7440-47-32	0.35		NA	.....
			Lead	7439-92-1	0.037		NA	.....
			Nickel	7440-02-0	0.47		NA	.....
*	*	*	*	*	*		*	
K030	NA		o-Dichlorobenzene	95-50-1	0.088		NA	.....
			p-Dichlorobenzene	106-46-7	0.09		NA	.....
			Hexachlorobutadiene	87-68-3	0.055		5.6	(1)
			Hexachloroethane	67-72-1	0.055		28	(1)
			Hexachloropropene	1888-71-7	NA		19	(1)
			Pentachlorobenzene	608-93-5	NA		28	(1)
			Pentachloroethane	76-01-7	NA		5.6	(1)
			1,2,4,5-Tetrachlorobenzene.	95-94-3	0.055		14	(1)
			Tetrachloroethene	127-18-4	0.056		6.0	(1)
			1,2,4-Trichlorobenzene	120-82-1	0.055		19	(1)
*	*	*	*	*	*		*	
K030	NA		2,4-Dichlorophenol	120-83-2	0.044		0.38	(1)
			2,6-Dichloropheno	187-65-0	0.044		0.34	(1)
			2,4,5-Trichlorophenol	95-95-4	0.18		8.2	(1)
			2,4,6-Trichlorophenol	88-06-2	0.035		7.6	(1)

268.43.—TABLE CCW.—CONSTITUENT CONCENTRATIONS IN WASTES—Continued

Waste code	Commercial chemical name	See also	Regulated hazardous constituent	CAS number for regulated hazardous constituent	Wastewaters		Nonwastewaters	
					Concentration (mg/l)	Notes	Concentration (mg/l)	Notes
			Tetrachlorophenols (Total)		NA		0.68	(1)
			Pentachlorophenol	87-86-5	0.089		1.9	(1)
			Tetrachloroethene	79-01-6	0.056		1.7	(1)
			Hexachlorodibenzo-p-dioxins.		0.000063		0.001	(1)
			Hexachlorodibenzofurans		0.000063		0.001	(1)
			Pentachlorodibenzo-p-dioxins.		0.000063		0.001	(1)
			Pentachlorodibenzo furans		0.000063		0.001	(1)
			Tetrachlorodibenzo-p-dioxins.		0.000063		0.001	(1)
			Tetrachlorodibenzofurans		0.000063		0.001	(1)
*	*	*	*	*	*	*		
K048	NA	Table CCWE in 268.41.	Benzene	71-43-2	0.14	(2)	14	(1)
			Benzo(a)pyrene	50-32-8	0.061	(2)	12	(1)
			Bis(2-ethylhexyl) phthalate	117-81-7	0.28	(2)	7.3	(1)
			Chrysene	218-01-9	0.059	(2)	15	(1)
			Di-n-butyl phthalate	84-74-2	0.057	(2)	3.6	(1)
			Ethylbenzene	100-41-4	0.057	(2)	14	(1)
			Fluorene	86-73-7	0.059	(2)	NA	
			Naphthalene	91-20-3	0.059	(2)	42	(1)
			Phenanthrene	85-01-8	0.059	(2)	34	(1)
			Phenol	108-95-2	0.039	(3)	3.6	(1)
			Pyrene	129-00-0	0.067	(2)	36	(1)
			Toluene	108-88-3	0.080	(2)	14	(1)
			Xylene(s)		0.32	(2)	22	(1)
			Cyanides (Total)	57-12-5	0.028	(1)	1.8	(1)
			Chromium (Total)	7440-47-32	0.2		NA	
			Lead	7439-92-1	0.037		NA	
K049	NA	Table CCWE in 268.41.	Anthracene	120-12-7	0.059	(2)	28	(1)
			Benzene	71-43-2	0.14	(2)	14	(1)
			Benzo(a)pyrene	117-81-7	0.061	(2)	12	(1)
			Bis(2-ethylhexyl) phthalate	75-150-0	0.28	(2)	7.3	(1)
			Carbon disulfide	75-15-0	0.014	(2)	NA	
			Chrysene	2218-01-9	0.059	(2)	15	(1)
			2,4-Dimethyl phenol	105-67-9	0.036	(2)	NA	
			Ethylbenzene	100-41-4	0.057	(2)	14	(1)
			Naphthalene	91-20-3	0.059	(2)	42	(1)
			Phenanthrene	85-01-8	0.059	(2)	34	(1)
			Phenol	108-95-2	0.039	(2)	3.6	(1)
			Pyrene	129-00-0	0.067	(2)	36	(1)
			Toluene	108-88-3	0.08	(2)	14	(1)
			Xylene(s)		0.32	(2)	22	(1)
			Cyanides (Total)	56-12-5	0.028	(1)	1.8	(1)
			Chromium (Total)	7440-47-32	0.2		NA	
K050	NA	Table CCWE in 268.41.	Lead	7439-92-1	0.037		NA	
			Benzo(a)pyrene	50-32-8	0.061	(2)	12	(1)
			Phenol	108-95-2	0.039	(2)	3.6	(1)
			Cyanides (Total)	57-12-5	0.028	(1)	1.8	(1)
			Chromium (Total)	7440-47-32	0.2		NA	
			Lead	7439-29-1	0.037		NA	
K051	NA	Table CCWE in 268.41.	Acenaphthene	83-32-9	0.059	(2)	NA	
			Anthracene	120-12-7	0.059	(2)	28	(1)
			Benzene	71-43-2	0.14	(2)	14	(1)
			Benzo(a) anthracene	50-32-8	0.059	(2)	20	(1)
			Benzo(a)pyrene	117-81-7	0.061	(2)	12	(1)
			Bis(2-ethylhexyl) phthalate	75-15-0	0.28	(2)	7.3	(1)
			Chrysene	2218-01-9	0.059	(2)	15	(1)
			Di-n-butyl phthalate	105-67-9	0.057	(2)	3.6	(1)
			Ethylbenzene	100-41-4	0.057	(2)	14	(1)
			Fluorene	86-73-7	0.059	(2)	NA	
			Naphthalene	91-20-3	0.059	(2)	42	(1)
			Phenanthrene	85-01-8	0.059	(2)	34	(1)
			Phenol	108-95-2	0.039	(2)	3.6	(1)
			Pyrene	129-00-0	0.067	(2)	36	(1)
			Toluene	108-88-3	0.08	(2)	14	(1)
			Xylene(s)		0.32	(2)	22	(1)
			Cyandides (Total)	57-12-5	0.028	(1)	1.8	(1)
			Chromium (Total)	7440-47-32	0.2		NA	
			Lead	7439-92-1	0.037		NA	
			Benzene	71-43-2	0.14	(2)	14	(1)
			Benzo(a)pyrene	50-32-8	0.061	(2)	12	(1)

268.43.—TABLE CCW.—CONSTITUENT CONCENTRATIONS IN WASTES—Continued

Waste code	Commercial chemical name	See also	Regulated hazardous constituent	CAS number for regulated hazardous constituent	Wastewaters		Nonwastewaters	
					Concentration (mg/l)	Notes	Concentration (mg/l)	Notes
K052	NA	Table CCWE in 268.41.	o-Cresol	95-48-7	0.11	(2)	6.2	(1)
			p-Cresol	106-44-5	0.77	(2)	6.2	(1)
			2,4-Dimethylphenol	105-67-9	0.036	(2)	NA	
			Ethylbenzene	100-41-4	0.057	(2)	14	(1)
			Naphthalene	91-20-3	0.059	(2)	42	(1)
			Phenanthrene	85-01-8	0.059	(2)	34	(1)
			Phenol	108-95-2	0.039	(2)	3.6	(1)
			Toluene	108-88-3	0.08	(2)	14	(1)
			Xylenes		0.32	(2)	22	(1)
			Cyanides (Total)	56-12-5	0.028	(1)	1.8	(1)
			Chromium (Total)	7440-47-32	0.2		NA	
			Lead	7439-92-1	0.037		NA	
*	*	*	*	*	*	*		
K087	NA	Table CCWE in 268.41.	Acenaphthalene	208-96-8	0.059	(2)	3.4	
			Benzene	71-43-2	0.14	(2)	0.071	(1)
			Chrysene	218-01-9	0.059	(2)	3.4	(1)
			Fluoranthene	206-44-0	0.068	(2)	3.4	(1)
			Indeno (1,2,3-cd) pyrene	193-39-5	0.0055	(2)	3.4	(1)
			Naphthalene	91-20-3	0.059	(2)	3.4	(1)
			Phenanthrene	85-01-8	0.059	(2)	3.4	(1)
			Toluene	108-88-3	0.08	(2)	0.65	(1)
			Xylenes		0.32	(2)	0.07	(1)
			Lead	7439-92-1	0.037		NA	
K093	NA		Phthalic anhydride (measured as Phthalic acid).	85-44-9	0.069		28	(1)
K094	NA		Phthalic anhydride (measured as Phthalic acid).	85-44-9	0.069		28	(1)
*	*	*	*	*	*	*		
K111	NA		2,4-Dinitrotoluene	121-14-2	0.32		140	(1)
			2,6-Dinitrotoluene	606-20-2	0.55		28	(1)
*	*	*	*	*	*	*		
K117	NA		Ethylene dibromide	106-93-4	0.028		15	(1)
			Methyl bromide	74-83-9	0.11		15	(1)
			Chloroform	67-66-3	0.046		5.6	(1)
K118	NA		Ethylene dibromide	106-93-4	0.028		15	(1)
			Methyl bromide	74-83-9	0.11		15	(1)
			Chloroform	67-66-3	0.046		5.6	(1)
K131	NA		Methyl bromide	74-83-9	0.11		15	(1)
K132	NA		Methyl bromide	74-83-9	0.11		15	(1)
K136	NA		Ethylene dibromide	106-93-4	0.028		15	(1)
			Methyl bromide	74-83-9	0.11		15	(1)
			Chloroform	67-66-3	0.046		5.6	(1)
*	*	*	*	*	*	*		
U028	Bis(2-ethylhexyl) phthalate.		Bis(2-ethylhexyl) phthalate	117-81-7	0.28		28	(1)
*	*	*	*	*	*	*		
U069	Di-n-butyl phthalate.		Di-n-butyl phthalate	84-74-2	0.057		28	(1)
*	*	*	*	*	*	*		
U088	Diethyl phthalate		Diethyl phthalate	84-66-2	0.2		28	(1)
*	*	*	*	*	*	*		
U102	Dimethyl phthalate		Dimethyl phthalate	131-11-3	0.047		28	(1)
*	*	*	*	*	*	*		
U107	Di-n-octyl phthalate.		Di-n-octyl phthalate	117-84-0	0.017		28	(1)
*	*	*	*	*	*	*		
U190	Phthalic anhydride (measured as Phthalic acid).		Phthalic anhydride (measured as Phthalic acid).	85-44-9	0.069		28	(1)
*	*	*	*	*	*	*		

[1] Treatment standards for this organic constituent were established based upon incineration in units operated in accordance with the technical requirements of 40 CFR 264 Subpart O or Part 265 Subpart O, or based upon combustion in fuel substitution units operating in accordance with applicable technical requirements. A facility may certify compliance with these treatment standards according to provisions in 40 CFR Section 268.7.

[2] Based on analysis of composite samples.

* * * * * * * *

NOTE: NA means Not Applicable.

38. In subpart D, § 268.45 with Table 1 is added to read as follows:

§268.45 Treatment standards for hazardous debris.

(a) *Treatment standards.* Hazardous debris must be treated prior to land disposal as follows unless EPA determines under § 261.3(e)(2) of this chapter that the debris is no longer contaminated with hazardous waste or

the debris is treated to the waste-specific treatment standard provided in this subpart for the waste contaminating the debris:

(1) *General.* Hazardous debris must be treated for each "contaminant subject to treatment" defined by paragraph (b) of this section using the technology or technologies identified in Table 1 of this section.

(2) *Characteristic debris.* Hazardous debris that exhibits the characteristic of ignitability, corrosivity, or reactivity identified under §§ 261.21, 261.22, and 261.23 of this chapter, respectively, must be deactivated by treatment using one of the technologies identified in Table 1 of this section.

(3) *Mixtures of debris types.* The treatment standards of Table 1 in this section must be achieved for each type of debris contained in a mixture of debris types. If an immobilization technology is used in a treatment train, it must be the last treatment technology used.

(4) *Mixtures of contaminant types.* Debris that is contaminated with two or more contaminants subject to treatment identified under paragraph (b) of this section must be treated for each contaminant using one or more treatment technologies identified in Table 1 of this section. If an immobilization technology is used in a treatment train, it must be the last treatment technology used.

(5) *Waste PCBs.* Hazardous debris that is also a waste PCB under 40 CFR part 761 is subject to the requirements of either 40 CFR part 761 or the requirements of this section, whichever are more stringent.

(b) *Contaminants subject to treatment.* Hazardous debris must be treated for each "contaminant subject to treatment." The contaminants subject to treatment must be determined as follows:

(1) *Toxicity characteristic debris.* The contaminants subject to treatment for debris that exhibits the Toxicity Characteristic (TC) by § 261.24 of this chapter are those EP constituents for which the debris exhibits the TC toxicity characteristic.

(2) *Debris contaminated with listed waste.* The contaminants subject to treatment for debris that is contaminated with a prohibited listed hazardous waste are those constituents for which BDAT standards are established for the waste under §§ 268.41 and 268.43.

(3) *Cyanide reactive debris.* Hazardous debris that is reactive because of cyanide must be treated for cyanide.

(c) *Conditioned exclusion of treated debris.* Hazardous debris that has been treated using one of the specified extraction or destruction technologies in Table 1 of this section and that does not exhibit a characteristic of hazardous waste identified under subpart C, part 261, of this chapter after treatment is not a hazardous waste and need not be managed in a subtitle C facility. Hazardous debris contaminated with a listed waste that is treated by an immobilization technology specified in Table 1 is a hazardous waste and must be managed in a subtitle C facility.

(d) *Treatment residuals*—(1) *General requirements.* Except as provided by paragraphs (d)(2) and (d)(4) of this section:

(i) Residue from the treatment of hazardous debris must be separated from the treated debris using simple physical or mechanical means; and

(ii) Residue from the treatment of hazardous debris is subject to the waste-specific treatment standards provided by subpart D of this part for the waste contaminating the debris.

(2) *Nontoxic debris.* Residue from the deactivation of ignitable, corrosive, or reactive characteristic hazardous debris (other than cyanide-reactive) that is not contaminated with a contaminant subject to treatment defined by paragraph (b) of this section, must be deactivated prior to land disposal and is not subject to the waste-specific treatment standards of subpart D of this part.

(3) *Cyanide-reactive debris.* Residue from the treatment of debris that is reactive because of cyanide must meet the standards for D003 under § 268.43.

(4) *Ignitable nonwastewater residue.* Ignitable nonwastewater residue containing equal to or greater than 10% total organic carbon is subject to the technology-based standards for D001: "Ignitable Liquids based on § 261.21(a)(1)" under § 268.42.

(5) *Residue from spalling.* Layers of debris removed by spalling are hazardous debris that remain subject to the treatment standards of this section.

TABLE 1.—ALTERNATIVE TREATMENT STANDARDS FOR HAZARDOUS DEBRIS [1]

Technology description	Performance and/or design and operating standard	Contaminant restrictions [2]
A. Extraction Technologies:		
1. Physical Extraction		
a. *Abrasive Blasting:* Removal of contaminated debris surface layers using water and/or air pressure to propel a solid media (e.g., steel shot, aluminum oxide grit, plastic beads).	*Glass, Metal, Plastic, Rubber:* Treatment to a clean debris surface.[3] *Brick, Cloth, Concrete, Paper, Pavement, Rock, Wood:* Removal of at least 0.6 cm of the surface layer; treatment to a clean debris surface.[3]	*All Debris:* None.
b. *Scarification, Grinding, and Planing:* Process utilizing striking piston heads, saws, or rotating grinding wheels such that contaminated debris surface layers are removed.	Same as above	Same as above.
c. *Spalling:* Drilling or chipping holes at appropriate locations and depth in the contaminated debris surface and applying a tool which exerts a force on the sides of those holes such that the surface layer is removed. The surface layer removed remains hazardous debris subject to the debris treatment standards.	Same as above	Same as above.
d. *Vibratory Finishing:* Process utilizing scrubbing media, flushing fluid, and oscillating energy such that hazardous contaminants or contaminated debris surface layers are removed.[4]	Same as above	Same as above.

TABLE 1.—ALTERNATIVE TREATMENT STANDARDS FOR HAZARDOUS DEBRIS [1]—Continued

Technology description	Performance and/or design and operating standard	Contaminant restrictions [2]
e. *High Pressure Steam and Water Sprays:* Application of water or steam sprays of sufficient temperature, pressure, residence time, agitation, surfactants, and detergents to remove hazardous contaminants from debris surfaces or to remove contaminated debris surface layers.	Same as above	Same as above.
2. Chemical Extraction		
a. *Water Washing and Spraying:* Application of water sprays or water baths of sufficient temperature, pressure, residence time, agitation, surfactants, acids, bases, and detergents to remove hazardous contaminants from debris surfaces and surface pores or to remove contaminated debris surface layers.	*All Debris:* Treatment to a clean debris surface;[3] *Brick, Cloth, Concrete, Paper, Pavement, Rock, Wood:* Debris must be no more than 1.2 cm (½ inch) in one dimension (i.e., thickness limit,[5] except that this thickness limit may be waived under an "Equivalent Technology" approval under § 268.42(b);[8] debris surfaces must be in contact with water solution for at least 15 minutes	*Brick, Cloth, Concrete, Paper, Pavement, Rock, Wood:* Contaminant must be soluble to at least 5% by weight in water solution or 5% by weight in emulsion; if debris is contaminated with a dioxin-listed waste,[6] an "Equivalent Technology" approval under § 268.42(b) must be obtained.[8]
b. *Liquid Phase Solvent Extraction:* Removal of hazardous contaminants from debris surfaces and surface pores by applying a nonaqueous liquid or liquid solution which causes the hazardous contaminants to enter the liquid phase and be flushed away from the debris along with the liquid or liquid solution while using appropriate agitation, temperature, and residence time.[4]	Same as above	*Brick, Cloth, Concrete, Paper, Pavement, Rock, Wood:* Same as above, except that contaminant must be soluble to at least 5% by weight in the solvent.
c. *Vapor Phase Solvent Extraction:* Application of an organic vapor using sufficient agitation, residence time, and temperature to cause hazardous contaminants on contaminated debris surfaces and surface pores to enter the vapor phase and be flushed away with the organic vapor.[4]	Same as above, except that brick, cloth, concrete, paper, pavement, rock and wood surfaces must be in contact with the organic vapor for at least 60 minutes.	Same as above.
3. Thermal Extraction		
a. *High Temperature Metals Recovery:* Application of sufficient heat, residence time, mixing, fluxing agents, and/or carbon in a smelting, melting, or refining furnace to separate metals from debris.	For refining furnaces, treated debris must be separated from treatment residuals using simple physical or mechanical means,[9] and, prior to further treatment, such residuals must meet the waste-specific treatment standards for organic compounds in the waste contaminating the debris.	*Debris contaminated with a dioxin-listed waste:*[5] Obtain an "Equivalent Technology" approval under § 268.42(b).[8]
b. *Thermal Desorption:* Heating in an enclosed chamber under either oxidizing or nonoxidizing atmospheres at sufficient temperature and residence time to vaporize hazardous contaminants from contaminated surfaces and surface pores and to remove the contaminants from the heating chamber in a gaseous exhaust gas.[7]	*All Debris:* Obtain an "Equivalent Technology" approval under § 268.42(b);[8] treated debris must be separated from treatment residuals using simple physical or mechanical means,[9] and, prior to further treatment, such residue must meet the waste-specific treatment standards for organic compounds in the waste contaminating the debris. *Brick, Cloth, Concrete, Paper, Pavement, Rock, Wood:* Debris must be no more than 10 cm (4 inches) in one dimension (i.e., thickness limit),[5] except that this thickness limit may be waived under the "Equivalent Technology" approval	*All Debris:* Metals other than mercury.
B. Destruction Technologies:		
1. *Biological Destruction (Biodegradation):* Removal of hazardous contaminants from debris surfaces and surface pores in an aqueous solution and biodegration of organic or nonmetallic inorganic compounds (i.e., inorganics that contain phosphorus, nitrogen, or sulfur) in units operated under either aerobic or anaerobic conditions.	*All Debris:* Obtain an "Equivalent Technology" approval under § 268.42(b);[8] treated debris must be separated from treatment residuals using simple physical or mechanical means,[9] and, prior to further treatment, such residue must meet the waste-specific treatment standards for organic compounds in the waste contaminating the debris. *Brick, Cloth, Concrete, Paper, Pavement, Rock, Wood:* Debris must be no more than 1.2 cm (½ inch) in one dimension (i.e., thickness limit),[5] except that this thickness limit may be waived under the "Equivalent Technology" approval	*All Debris:* Metal contaminants.
2. Chemical Destruction		
a. *Chemical Oxidation:* Chemical or electolytic oxidation utilizing the following oxidation reagents (or waste reagents) or combination of reagents—(1) hypochlorite (e.g., bleach); (2) chlorine; (3) chlorine dioxide; (4) ozone or UV (ultraviolet light) assisted ozone; (5) peroxides; (6) persulfates; (7) perchlorates; (8) permanganates; and/or (9) other oxidizing reagents of equivalent destruction efficiency.[4] Chemical oxidation specifically includes what is referred to as alkaline chlorination.	*All Debris:* Obtain an "Equivalent Technology" approval under § 268.42(b);[8] treated debris must be separated from treatment residuals using simple physical or mechanical means,[9] and, prior to further treatment, such residue must meet the waste-specific treatment standards for organic compounds in the waste contaminating the debris. *Brick, Cloth, Concrete, Paper, Pavement, Rock, Wood:* Debris must be no more than 1.2 cm (½ inch) in one dimension (i.e., thickness limit),[5] except that this thickness limit may be waived under the "Equivalent Technology" approval	*All Debris:* Metal contaminants.

TABLE 1.—ALTERNATIVE TREATMENT STANDARDS FOR HAZARDOUS DEBRIS [1]—Continued

Technology description	Performance and/or design and operating standard	Contaminant restrictions [2]
b. *Chemical Reduction:* Chemical reaction utilizing the following reducing reagents (or waste reagents) or combination of reagents: (1) sulfur dioxide; (2) sodium, potassium, or alkali salts of sulfites, bisulfites, and metabisulfites, and polyethylene glycols (e.g., NaPEG and KPEG); (3) sodium hydrosulfide; (4) ferrous salts; and/or (5) other reducing reagents of equivalent efficiency.[4]	Same as above	Same as above.
3. *Thermal Destruction:* Treatment in an incinerator operating in accordance with Subpart O of Parts 264 or 265 of this chapter; a boiler or industrial furnace operating in accordance with Subpart H of Part 266 of this chapter, or other thermal treatment unit operated in accordance with Subpart X, Part 264 of this chapter, or Subpart P, Part 265 of this chapter, but excluding for purposes of these debris treatment standards Thermal Desorption units.	Treated debris must be separated from treatment residuals using simple physical or mechanical means,[9] and, prior to further treatment, such residue must meet the waste-specific treatment standards for organic compounds in the waste contaminating the debris.	*Brick, Concrete, Glass, Metal, Pavement, Rock, Metal:* Metals other than mercury, except that there are no metal restrictions for vitrification. *Debris contaminated with a dioxin-listed waste.*[6] Obtain an "Equivalent Technology" approval under § 268.42(b),[8] except that this requirement does not apply to vitrification.
C. Immobilization Technologies:		
1. *Macroencapsulation:* Application of surface coating materials such as polymeric organics (e.g., resins and plastics) or use of a jacket of inert inorganic materials to substantially reduce surface exposure to potential leaching media.	Encapsulating material must completely encapsulate debris and be resistant to degradation by the debris and its contaminants and materials into which it may come into contact after placement (leachate, other waste, microbes).	None.
2. *Microencapsulation:* Stabilization of the debris with the following reagents (or waste reagents) such that the leachability of the hazardous contaminants is reduced: (1) Portland cement; or (2) lime/pozzolans (e.g., fly ash and cement kiln dust). Reagents (e.g., iron salts, silicates, and clays) may be added to enhance the set/cure time and/or compressive strength, or to reduce the leachability of the hazardous constituents.[5]	Leachability of the hazardous contaminants must be reduced.	None.
3. *Sealing:* Application of an appropriate material which adheres tightly to the debris surface to avoid exposure of the surface to potential leaching media. When necessary to effectively seal the surface, sealing entails pretreatment of the debris surface to remove foreign matter and to clean and roughen the surface. Sealing materials include epoxy, silicone, and urethane compounds, but paint may not be used as a sealant.	Sealing must avoid exposure of the debris surface to potential leaching media and sealant must be resistent to degradation by the debris and its contaminants and materials into which it may come into contact after placement (leachate, other waste, microbes).	None.

[1] Hazardous debris must be treated by either these standards or the waste-specific treatment standards for the waste contaminating the debris. The treatment standards must be met for each type of debris contained in a mixture of debris types, unless the debris is converted into treatment residue as a result of the treatment process. Debris treatment residuals are subject to the waste-specific treatment standards for the waste contaminating the debris.

[2] Contaminant restriction means that the technology is not BDAT for that contaminant. If debris containing a restricted contaminant is treated by the technology, the contaminant must be subsequently treated by a technology for which it is not restricted in order to be land disposed (and excluded from Subtitle C regulation).

[3] "Clean debris surface" means the surface, when viewed without magnification, shall be free of all visible contaminated soil and hazardous waste except that residual staining from soil and waste consisting of light shadows, slight streaks, or minor discolorations, and soil and waste in cracks, crevices, and pits may be present provided that such staining and waste and soil in cracks, crevices, and pits shall be limited to no more than 5% of each square inch of surface area.

[4] Acids, solvents, and chemical reagents may react with some debris and contaminants to form hazardous compounds. For example, acid washing of cyanide-contaminated debris could result in the formation of hydrogen cyanide. Some acids may also react violently with some debris and contaminants, depending on the concentration of the acid and the type of debris and contaminants. Debris treaters should refer to the safety precautions specified in Material Safety Data Sheets for various acids to avoid applying an incompatible acid to a particular debris/contaminant combination. For example, concentrated sulfuric acid may react violently with certain organic compounds, such as acrylonitrile.

[5] If reducing the particle size of debris to meet the treatment standards results in material that no longer meets the 60 mm minimum particle size limit for debris, such material is subject to the waste-specific treatment standards for the waste contaminating the material, unless the debris has been cleaned and separated from contaminated soil and waste prior to size reduction. At a minimum, simple physical or mechanical means must be used to provide such cleaning and separation of nondebris materials to ensure that the debris surface is free of caked soil, waste, or other nondebris material.

[6] Dioxin-listed wastes are EPA Hazardous Waste numbers FO20, FO21, FO22, FO23, FO26, and FO27.

[7] Thermal desorption is distinguished from Thermal Destruction in that the primary purpose of Thermal Desorption is to volatilize contaminants and to remove them from the treatment chamber for subsequent destruction or other treatment.

[8] The demonstration "Equivalent Technology" under § 268.42(b) must document that the technology treats contaminants subject to treatment to a level equivalent to that required by the performance and design and operating standards for other technologies in this table such that residual levels of hazardous contaminants will not pose a hazard to human health and the environment absent management controls.

[9] Any soil, waste, and other nondebris material that remains on the debris surface (or remains mixed with the debris) after treatment is considered a treatment residual that must be separated from the debris using, at a minimum, simple physical or mechanical means. Examples of simple physical or mechanical means are vibratory or trommel screening or water washing. The debris surface need not be cleaned to a "clean debris surface" as defined in note 3 when separating treated debris from residue; rather, the surface must be free of caked soil, waste, or other nondebris material. Treatment residuals are subject to the waste-specific treatment standards for the waste contaminating the debris.

39. In subpart D, § 268.46 is added to read as follows:

§ 268.46 Alternative treatment standards based on HTMR.

Table 1 identifies alternative treatment standards for F006 and K062 nonwastewaters.

TABLE 1.—ALTERNATIVE TREATMENT STANDARDS

Waste code	See also	Regulated hazardous constituent	CAS No. for regulated hazardous constituent	Non-wastewaters concentration (mg/1) TCLP
F006	Table CCWE in 268.41 and Table CCW in 268.43	Antimony	7440-36-0	2.1
		Arsenic	7440-38-2	0.055
		Barium	7440-39-3	7.6
		Beryllium	7440-41-7	0.014
		Cadmium	7440-43-9	0.19
		Chromium (total)	7440-47-32	0.33
		Cyanide (mg/kg) (total)	57-12-5	1.8
		Lead	7439-92-1	0.37
		Mercury	7439-97-6	0.009
		Nickel	7440-02-0	5.0
		Selenium	7782-49-2	0.16
		Silver	7440-22-4	0.30
		Thallium		0.078
		Zinc	7440-66-6	5.3
K062	Table CCWE in 268.41 and Table CCW in 268.43	Antimony	7440-36-0	2.1
		Arsenic	7440-38-2	0.055
		Barium	7440-39-3	7.6
		Beryllium	7440-41-7	0.014
		Cadmium	7440-43-9	0.19
		Chromium (total)	7440-47-32	0.33
		Lean	7439-92-1	0.37
		Mercury	7439-97-6	0.009
		Nickel	7440-02-0	5.0
		Selenium	7782-49-2	0.16
		Silver	7440-22-4	0.30
		Thallium		0.078
		Zinc	7440-66-6	5.3

40. In § 268.50, paragraph (a)(1) and the introductory text of paragraph (a)(2) are revised to read as follows:

§ 268.50 Prohibitions on storage of restricted wastes.

(a) * * *

(1) A generator stores such wastes in tanks, containers, or containment buildings on-site solely for the purpose of the accumulation of such quantities of hazardous waste as necessary to facilitate proper recovery, treatment, or disposal and the generator complies with the requirements in § 262.34 and parts 264 and 265 of this chapter.

(2) An owner/operator of a hazardous waste treatment, storage, or disposal facility stores such wastes in tanks, containers, or containment buildings solely for the purpose of the accumulation of such quantities of hazardous waste as necessary to facilitate proper recovery, treatment, or disposal and:

* * * * *

41. In Part 268, appendix II is revised to read as follows:

Appendix II—Treatment Standards (As Concentrations in the Treatment Residual Extract)

Note: The treatment standards for F001–F005 Spent Solvent Wastes appear in §§ 268.41, 268.42, 268.43.

PART 270—EPA ADMINISTERED PERMIT PROGRAMS: THE HAZARDOUS WASTE PERMIT PROGRAM

42. The authority citation for part 270 continues to read as follows:

Authority: 42 U.S.C. 6905, 6912, 6924, 6925, 6927, 6939, and 6974.

43. In § 270.13, paragraph (n) is added to read as follows:

§ 270.13 Contents of Part A of the permit application.

* * * * *

(n) For hazardous debris, a description of the debris category(ies) and contaminant category(ies) to be treated, stored, or disposed of at the facility.

44. In § 270.14, paragraph (b)(2) is revised to read as follows:

§ 270.14 Contents of Part B: General requirements.

* * * * *

(b) * * *

(2) Chemical and physical analyses of the hazardous waste and hazardous debris to be handled at the facility. At a minimum, these analyses shall contain all the information which must be known to treat, store, or dispose of the wastes properly in accordance with part 264 of this chapter.

* * * * *

45. In § 270.42, paragraph (e)(3)(ii)(B) is revised to read as follows:

§ 270.42 Permit modification at the request of the permittee.

* * * * *

(e) * * *

(ii) * * *

(B) To allow treatment or storage in tanks or containers, or in containment buildings in accordance with 40 CFR part 268;

* * * * *

46. In § 270.42, appendix I is amended by adding entry 6 to section I., and by adding new section M. to read as follows:

APPENDIX I TO § 270.42—CLASSIFICATION OF PERMIT MODIFICATION

Modifications	Class
* * * * *	
I. Enclosed Waste Piles. * * *	
* * * * *	
6. Conversion of an enclosed waste pile to a containment building unit	2
* * * * *	
M. Containment Buildings.	
1. Modification or addition of containment building units:	
a. Resulting in greater than 25% increase in the facility's containment building storage or treatment capacity	3
b. Resulting in up to 25% increase in the facility's containment building storage or treatment capacity	2
2. Modification of a containment building unit or secondary containment system without increasing the capacity of the unit	2
3. Replacement of a containment building with a containment building that meets the same design standards provided:	
a. The unit capacity is not increased	1

APPENDIX I TO § 270.42—CLASSIFICATION OF PERMIT MODIFICATION—Continued

Modifications	Class
b. The replacement containment building meets the same conditions in the permit	1
4. Modification of a containment building management practice	2
5. Storage or treatment of different wastes in containment buildings:	
a. That require additional or different management practices	3
b. That do not require additional or different management practices	2

47. In § 270.72, paragraph (b)(6) is revised to read as follows:

§ 270.72 Changes during interim status.

* * * * *

(b) * * *

(6) Changes to treat or store, in tanks, containers, or containment buildings, hazardous wastes subject to land disposal restrictions imposed by part 268 of this chapter or RCRA section 3004, provided that such changes are made solely for the purpose of complying with part 268 of this chapter or RCRA section 3004.

* * * * *

PART 271—REQUIREMENTS FOR AUTHORIZATION OF STATE HAZARDOUS WASTE PROGRAMS

48. The authority citation for part 271 continues to read as follows:

Authority: 42 U.S.C. 6905, 6912(a), and 6926.

Subpart A—Requirements for Final Authorization

49. Section 271.1(j) is amended by adding the following entries to Table 1 in chronological order by date of publication in the **Federal Register**, and by adding the following entries to Table 2 in chronological order by effective date to read as follows:

§ 271.1 Purpose and scope.

* * * * *

TABLE 1.—REGULATIONS IMPLEMENTING THE HAZARDOUS AND SOLID WASTE AMENDMENTS OF 1984

Promulgation date	Title of regulation	Federal Register reference	Effective date
* * *	* *	*	*
August 18, 1992	Land disposal restrictions for newly listed wastes in § 268.36 (b)–(g).	[Insert **Federal Register** (FR) page number].	June 30, 1992.
Do	Land disposal restrictions for newly listed wastes in § 268.36(a), hazardous debris, and generic exclusion for K062 and F006 non-waste-waters.	Do	November 9, 1992.
* * *	* *	*	*
* * *	* *	*	*

TABLE 2.—SELF-IMPLEMENTING PROVISIONS OF THE HAZARDOUS AND SOLID WASTE AMENDMENTS OF 1984

Effective date	Self-implementing provision	RCRA citation	Federal Register reference
* *	* *	*	*
June 30, 1992	Surface Impoundment Retrofit	[Insert **Federal Register** (FR) page numbers].	August 18, 1992, 57 FR
November 9, 1992	Prohibition on land disposal of hazardous debris and newly listed wastes.	Do	August 18, 1992, 57 FR
February 18, 1993	Containment buildings	Do	August 18, 1992, 57 FR
* *	* *	*	*

* * * * * * *

[FR Doc. 92–15997 Filed 8–17–92; 8:45 am]
BILLING CODE 6560–50–M

federal register

Tuesday
August 18, 1992

Part III

Environmental Protection Agency

40 CFR Parts 261 et al.

Identification and Listing of Hazardous Waste; CERCLA Hazardous Designation; Reportable Quality Adjustment; Coke By-Products Waste

ENVIRONMENTAL PROTECTION AGENCY

40 CFR Parts 261, 271, and 302

[FRL-4134-2]

RIN 2050-AC85

Identification and Listing of Hazardous Waste; CERCLA Hazardous Substance Designation; Reportable Quantity Adjustment; Coke By-Products Wastes

AGENCY: Environmental Protection Agency.

ACTION: Final rule.

SUMMARY: The Environmental Protection Agency is today amending its regulations under the Resource Conservation and Recovery Act (RCRA) by listing as hazardous seven wastes generated during the production, recovery, and refining of coke by-products produced from coal. EPA is adding seven wastes to the list of hazardous wastes from specific sources. EPA is also amending appendix VII of 40 CFR part 261 to add the constituents for which these wastes are being listed. In addition, the Agency is finalizing the proposed determination not to list as hazardous wastes wastewaters from coking and tar refining operations.

The effect of listing K141 through K145, K147 and K148 will be to subject these materials to the hazardous waste regulations of 40 CFR parts 124, 262 through 266, 268, 270 and 271, the notification requirements of RCRA 3010, and the notification requirements under section 103 of CERCLA.

In addition to the listings, the Agency is today amending and clarifying an exclusion from the definition of solid waste for wastes from the coke by-products process that exhibit the TC and are recycled by being returned to coke ovens or mixed with coal tar (57 FR 27880).

EFFECTIVE DATE: Today's final rule will become effective on February 18, 1993.

ADDRESSES: The official record for this rulemaking is identified as Docket Number F-92-CBPF-FFFFF and is located in the EPA RCRA Docket, room M2427, 401 M Street, SW., Washington, DC 20460. The public must make an appointment in order to review docket materials by calling (202) 260-9327 for the RCRA portion of the docket, or (202) 260-3046 for the CERCLA portion of the docket. Both dockets are available for inspection from 9 a.m. to 4 p.m., Monday through Friday, excluding holidays. The public may copy up to 100 pages from the docket at no charge. Additional copies cost $0.15 per page.

FOR FURTHER INFORMATION CONTACT: The RCRA/Superfund Hotline toll-free at (800) 424-9346 (voice) or (800) 553-7672 (TDD), or, in the Washington, DC metropolitan area, (703) 920-9810 (voice) or (703) 486-3323 (TDD). For technical information on the RCRA portion of the rule, contact Mr. Ron Josephson of the Office of Solid Waste (OS-333) at (202) 260-4770. For technical information on the CERCLA portion of the rule, contact Ms. Gerain Perry, Office of Emergency and Remedial Response (OS-210) at (202) 260-2190.

SUPPLEMENTARY INFORMATION: The contents of today's preamble are listed in the following outline:

I. Background
II. Summary of the Regulation
A. Overview of the Proposed Rule
B. Overview of the Final Rule
1. Hazardous waste listings
2. Recycling exclusion
C. Industry Overview
D. Process and Waste Descriptions
1. The coking process
2. The tar refining process
E. Wastes Included in Today's Listing
F. Basis for Listing
III. Summary of Public Comments and Responses
A. Hazardous Waste Listings
B. Recycling Exclusion
IV. Interaction with Other Regulations
A. Land Disposal Restrictions
V. State Authority
A. Applicability of Final Rule in Authorized States
B. Effect on State Authorization
VI. CERCLA Designation and Reportable Quantities
VII. Cost and Economic Analysis
A. Cost Analysis
B. Economic Impact Analysis
1. Coking industry
2. Tar refining industry
VIII. Regulatory Flexibility Act
A. Executive Order Requirements
IX. Paperwork Reduction Act
X. Compliance and Implementation
A. Section 3010 Notification
B. Compliance Dates for Facilities

I. Background

Section 3001 of Subtitle C of RCRA mandates that EPA make a determination whether to list as hazardous certain wastes generated during the production, recovery, and refining of coke by-products produced from coal. EPA proposed to list a number of these wastes from the coke by-products process as hazardous in a notice published in the **Federal Register** on July 26, 1991 (56 FR 35758). Certain other wastes from the coke by-products industry are already listed as hazardous under RCRA. An overview of past regulatory actions taken by the Agency that affect this industry was provided in the preamble to the proposed rule (see 56 FR 35759).

On July 26, 1991, EPA proposed to add seven wastes from the coke by-products process to the list of wastes from specific sources. Today's notice promulgates these seven "K-listings."

In a separate **Federal Register** notice (57 FR 27880), EPA promulgated an exclusion from the definition of solid waste for Hazardous Waste No. K087, and other wastes from the coke by-products process that are hazardous only because they exhibit the Toxicity Characteristic (TC) specified in § 261.24, when they are recycled by being returned to coke ovens as a feedstock to produce coke, added to the tar recovery process to produce coal tar, or mixed with coal tar prior to its sale or refining. This exclusion was conditioned on no land disposal of wastes. Today, the Agency is amending this exclusion to include the wastes being listed in this notice.

II. Summary of the Regulation

A. Overview of the Proposed Rule

The notice published on July 26, 1991 (56 FR 35758) proposed to amend the regulations for hazardous waste listing under RCRA by adding the following seven wastes generated during the production, recovery, and refining of coke by-products produced from coal to the list of hazardous wastes from specific sources under 40 CFR 261.32.

K141—Process residues from the recovery of coal tar, including, but not listed to, tar collecting sump residues from the production of coke from coal or the recovery of coke by-products produced from coal. This listing does not include K087 (decanter tank tar sludge from coking operations).

K142—Tar storage tank residues from the production of coke from coal or from the recovery of coke by-products produced from coal.

K143—Process residues from the recovery of light oil, including, but not limited to, those generated in stills, decanters, and wash oil recovery units from the recovery of coke by-products produced from coal.

K144—Wastewater treatment sludges from light oil refining, including, but not limited to, intercepting or contamination sump sludges from the recovery of coke by-products produced from coal.

K145—Residues from naphthalene collection and recovery operations from the recovery of coke by-products produced from coal.

K147—Tar storage tank residues from coal tar refining.

K148—Residues from coal tar distillation, including, but not limited to, still bottoms.

The Agency also proposed to amend appendix VII of 40 CFR part 261 to add the following constituents for which these wastes were proposed for listing: Benzene and polynuclear aromatic hydrocarbons (PAHs), including benz(a)anthracene, benzo(a)pyrene, benzo(b and k)fluoranthene, dibenz(a,h)anthracene, indeno(1,2,3-cd)pyrene, and naphthalene.

Lastly, the Agency proposed to amend the Comprehensive Environmental Response, Compensation, and Liability Act (CERCLA) regulations in 40 CFR part 302 by designating all of the proposed listed wastes as hazardous substances under CERCLA. Pursuant to section 102(b) of CERCLA, the reportable quantities (RQs) applicable to each of these wastes is one pound.

The proposed listings included process residues and storage tank residues other than those residuals already listed as EPA Hazardous Waste Nos. K035, K060, and K087. Several industry commenters requested clarification on the scope of the proposed listings. Details on the scope of the listings finalized in today's rule as well as descriptions of the modifications made to the proposed listings are discussed below under Wastes Included in Today's Listing. The proposed listings did not include wastewaters or wastewater treatment sludges from coke by-products recovery and tar refining.

Because a number of the wastes that were proposed for listing are recycled by members of the coke by-products industry, EPA supported the environmentally beneficial recycling of these wastes by proposing to exclude the listed wastes from the definition of solid waste when they are recycled in certain ways. This exclusion is conditioned on no land disposal of the wastes. These wastes are generally recycled using one of the two following methods: (1) Combining the residue with coal feedstock prior to or just after charging the coal into the coke oven, and (2) mixing the residue with coal tar prior to its being sold as a product. In order to maintain hazardous waste control over the listed wastes in the event of mismanagement, the Agency proposed that the exclusions apply at the point of reinsertion of the wastes into the coke ovens or the point at which they are mixed with coal tar. The exclusions were intended to encourage waste minimization while maintaining RCRA control over the wastes prior to the recycling step (i.e., during interim storage and transportation) and when using management practices other than recycling.

EPA proposed the listings of K141–K145 and K147–K148 in response to the Hazardous and Solid Waste Amendments (HSWA) of 1984. Section 3001(e)(2) of RCRA, added by HSWA, requires EPA to make a listing determination for wastes generated from the coke by-products industry.

B. Overview of the Final Rule

1. Hazardous Waste Listings

Today's rule adds to the list of wastes from specific sources the seven listings proposed on July 26, 1991. These are as follows:

K141—Process residues from the recovery of coal tar, including, but not limited to, tar collecting sump residues from the production of coke from coal or the recovery of coke by-products produced from coal. This listing does not include K087 (decanter tank tar sludge from coking operations).

K142—Tar storage tank residues from the production of coke from coal or from the recovery of coke by-products produced from coal.

K143—Process residues from the recovery of light oil, including, but not limited to, those generated in stills, decanters, and wash oil recovery units from the recovery of coke by-products produced from coal.

K144—Wastewater sump residues from light oil refining, including, but not limited to, intercepting or contamination sump sludges from the recovery of coke by-products produced from coal.

K145—Residues from naphthalene collection and recovery operations from the recovery of coke by-products produced from coal.

K147—Tar storage tank residues from coal tar refining.

K148—Residues from coal tar distillation, including, but not limited to, still bottoms.

Today's rule also amends appendix VII of part 261 to include the constituents for which these wastes are listed.

2. Recycling Exclusion

Several recycling exclusions were proposed on July 26, 1991 as 40 CFR 261.4 (a)(10–(12). Public comments on these exclusions were requested separately from comments on the rest of the listing proposal. For a brief summary of these public comments and EPA's response to them, see the Summary of Public Comments and Responses section later in this preamble. The public comments concerning the recycling exclusion are addressed fully in the exclusion rule promulgated on June 22, 1992 (57 FR 27880).

This rule excluded from the definition of solid waste Hazardous Waste No. K087, and any other wastes from the coke by-products process that are hazardous only because they exhibit the TC, when they are recycled to coke ovens as a feedstock to produce coke, to the tar recovery process to produce coal tar, or mixed with coal tar prior to its sale or refining. This exclusion for recycling is conditioned on there being no land disposal for the materials up to the point of recycling (see 40 CFR 261.4(a)(10); 57 FR 27888). Today, EPA is amending this exclusion to include the wastes being listed in this notice within the scope of the exclusion. The extension of the exclusion to the wastes being listed in today's rule is logical given the fact that many, if not all of the wastes listed here qualify for the existing exclusion under § 261.4(a)(10). In addition, all commenters to the proposed rule who commented on recycling issues supported this action.

As indicated in the proposal, the Agency is including the following additional materials in the recycling exclusion under 40 CFR 261.4(a)(10): K060, K087, K141, K142, K143, K144, K145, K147, K148, and wastes from the coke by-products industry that are hazardous only because they exhibit the TC. The exclusion does not apply if other hazardous wastes (*e.g.*, spent solvents, TC hazardous wastes from other industries, etc.) are mixed with the above-mentioned residues or charged to a coke oven. If the "no land disposal" condition of the exclusion is met, the wastes listed above are not solid wastes and, thus, not hazardous wastes, when they are recycled to coke ovens or tar recovery processes, or mixed with coal tar. The effect of this exclusion from the definition of solid waste is to remove these coke by-product wastes from RCRA control when they are recycled within the coking and tar refining industries. In other words, as long as coke by-product wastes are being recycled within the terms of the exclusion at 40 CFR 261.4(a)(10), no permit is needed for the storage or management of these wastes, no manifest is required for transport of these wastes, and so on. It is important to note, however, that certain recordkeeping requirements under the Land Disposal Restrictions program still attach to wastes that have been excluded from RCRA regulation. These requirements are discussed later in this preamble in the section entitled Interaction with Other Regulations.

C. Industry Overview

In the preamble to the proposed rule, EPA presented a description of the coking and tar refining industries, along with descriptions and quantities of

wastes generated and descriptions of waste management practices employed for the wastes. This information remains the most recent and accurate information on the industry available to EPA and was relied upon in developing the final rule. The industry statistics are based on 1987 data which indicate that 21 domestic companies produced approximately 28 million metric tons of coke at 34 plants. Updated information provided by an industry trade association indicates that there are currently 32 active plants which are divided into two segments: Captive coke producers (22 plants) and merchant coke producers (10 plants). The 22 captive coke plants are operated by major iron and steel companies and produce blast furnace coke that is generally used on-sit or within the same company at integrated iron and steel plants to produce steel. The 10 merchant coke plants generally produce blast furnace coke for sale to iron and steel companies, and metallurgical coke for sale to iron and steel foundries and to other metallurgical and chemical industries. A list of active plants is provided in the Background Document for today's rule.

In 1985, about 1,200 million liters of coal tar, 3.7 billion liters of sodium phenolate, 7,000 metric tons of naphthalene, and 580 million liters of light oil were produced as coke by-products. The crude coal tar is sold to independent tar refiners for the production of other coal tar by-products. The 1985 production of these coal tar by-products was approximately 45 million liters of light oil, 500 million liters of creosote oil, 550 million liters of refined tar (excluding tar used as road tar), and 470,000 metric tons of coal tar pitch. More recent data indicate that domestic coke plants produced 256,823,533 gallons of crude coal tar in 1991.

Table 1 presents estimates, based on data collected from 1985 to 1987, of the quantities of waste generated from the production of coke and coke by-products, recovery of coke by-products, and coal tar refining. The assumptions and data used to generate these estimates are provided in the Background Document for this rule. Tables containing the waste management practices used for these wastes and the percentage of facilities employing each waste management practice are also presented in the Background Document. Overall, at least 40 percent of the facilities who reported waste management practices in the 1985 RCRA 3007 questionnaire recycle the wastes and products addressed in today's rule.

TABLE 1.—ESTIMATED NATIONWIDE WASTE QUANTITIES (MT/YR)

Waste	Quantity
K141—Process residues from the recovery of coal tar, including, but not limited to, collecting sump residues from the production of coke from coal or the recovery of coke by-products produced from coal. This listing does not include K087 (decanter tank tar sludges from coking operations)	3,100
K142—Tar storage tank residues from the production of coke from coal or from the recovery of coke by-products produced from coal	10,000
K143—Process residues from the recovery of light oil, including, but not limited to, those generated in stills, decanters, and wash oil recovery units from the recovery of coke by-products produced from coal	4,500
K144—Wastewater sump residues from light oil refining, including, but not limited to, intercepting or contamination sump sludges from the recovery of coke by-products produced from coal	900
K145—Residues from naphthalene collection and recovery operations from the recovery of coke by-products produced from coal	450
K147—Tar storage tank residues from coal tar refining	2,800
K148—Residues from coal tar distillation, including, but not limited to, still bottoms	270

D. Process and Waste Descriptions

1. The Coking Process

Coke is manufactured by anaerobic carbonization of coal in high temperature (900–1200°C) coke ovens. Coke is the main product and is used as a reductant in the blast furnaces used in iron manufacturing. The coke oven gas (COG) is processed through recovery units to separate other such saleable by-products as coal tar, light oil, and ammonia liquor from the gas stream and the remainder of the gas stream is then used as fuel.

Figure 1 is a general process flow diagram that indicates the sources of by-product residues that are the subject of this rule. During the recovery of coal tar from the coke oven gas, tar residue accumulates in the tar decanter tank (K087), the tar collection sump (K141) and at the bottom of tar storage tanks (K147). The light oil recovery process generates wash and light oil residues (K143) in the scrubber tower, the stripping still, and in a decanter or centrifuge used to separate a polymerized resin referred to as wash oil muck from the recycled wash oil. A wastewater collecting sump, used to separate the oil and water in wastewaters from the light oil recovery area, generates wastewater sump residues (K144). Naphthalene recovery residues (K145) are generated in the final cooling tower, naphthalene separator and collection sumps. Facilities may also use an ammonia still, in which a "lime sludge" accumulates (K060).

BILLING CODE 6560-50-M

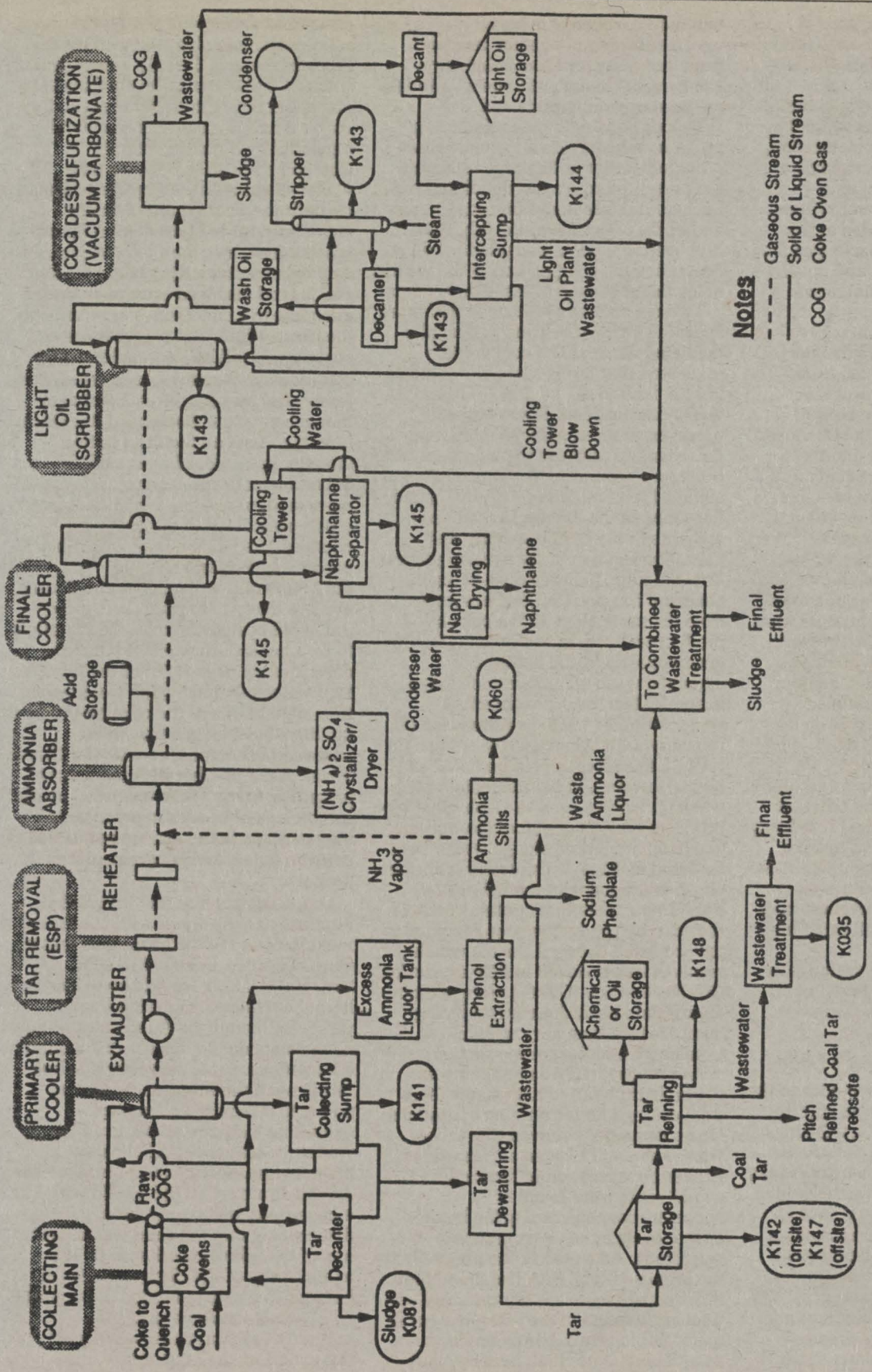

Figure 1
COKE BY-PRODUCTS RECOVERY

BILLING CODE 6560-50-C

2. The Tar Refining Process

Coal tar is typically refined to produce commercial and industrial products including pitch, creosote oil, refined tar, naphthalene, and commercial materials such as bitumen. Coal tar is refined by either batch or continuous distillation. The heavy liquid components such as pitch and creosote are sent to a distillation column for further refining. The pitch, which is generated at the softening point of tar, is discharged from the still, cooled, extruded, and poured into barrels or other containers for storage.

The coal tar refining plant may produce two process residuals that will be added to the list of wastes from specific sources. The first process residual is generated at the bottom of the coal tar storage tanks (K147). Based on the information provided to the Agency during the industry study and public comment periods, this residual is generated infrequently. Large volumes of tar storage tank bottoms were recently generated during the tank clean-outs required for compliance with the benzene NESHAPs rule. However, mechanical mixers or air agitators were installed at several plants to prevent future formation of this residual. The same residual is generated in coal tar storage tanks at coking facilities.

The second process waste from the refining plant, identified as K148, is high boiling-point residue, which accumulates on the fire tubes and at the bottom of the batch still and must be removed periodically. These tar refining residuals are either recycled to coke ovens at the same or adjacent facilities, or sold to other coking facilities as products. Tar distillation residues may also be recycled to the distillation tank along with crude coal tar.

In addition to the above, a sludge is often formed from the treatment of tar refining wastewaters. This sludge carries the K035 listing.

E. Wastes Included in Today's Listing

Today's rule adds seven wastes to the list of hazardous wastes from specific sources (40 CFR 261.32). These listings encompass all of the same materials described and proposed for listing in the proposed rule. The seven wastes added to § 261.32, K141, K142, K143, K144, K145, K147, and K148, retain the same scope as the corresponding proposed listed wastes. The listing descriptions also remain the same as those proposed, with the exception of the description of K144 wastes, which are now more accurately called "wastewater sump residues" rather than "wastewater treatment sludges." (For further explanation, see Footnote 1 to Table 6 below.) This change is based on information and comments received from the coke by-products industry. K144 wastes include the same materials as those originally proposed.

Descriptions of the manufacturing process and sources of the wastes are provided earlier in this preamble and are presented in greater detail in the Background Document for today's rule and in the preamble to the July 1991 proposed rule. EPA also provides data describing the composition of the wastes being listed in each of these documents.

Two commenters requested that more specific language be used to describe the listed wastes. The commenters requested that terms such as "including but not limited to" be deleted from the waste descriptions. These terms, however, are necessary in describing these wastes because the manufacturing processes generating the wastes are not always identical. If the Agency limited the scope of the listings to residues generated only by the specific unit operations shown in the generic process flow diagram, then residues of similar chemical composition that are generated from the same stage of the coke by-product recovery operation may not be encompassed by the listing. For example, wash oil circulation sludge generally has the same chemical composition as residues from wash oil recovery units when used to wash light oil and, therefore, would be listed as K143. However, in certain instances, wash oil may be used to wash other by-products such as naphthalene, and the wash oil circulation sludge would then be listed as K145. This preamble further clarifies the scope of the listings by providing a table that contains each of the coke by-product wastes specified in the proposed Consent Decree which resolves issues raised in *EDF* vs. *Reilly*, Civ. No. 89–0598 (D.D.C.) along with the appropriate hazardous waste listing numbers (see Summary of Public Comments and Responses section).

As proposed, EPA is finalizing the determination not to list wastewaters from coking and tar refining operations. One commenter believed that these wastes should be listed as hazardous wastes because certain hazardous constituents were found at concentrations exceeding the health-based levels by over six orders of magnitude. As stated in the preamble to the proposed rule, EPA has found that these constituents are not typically and frequently found in the wastewaters at quantifiable levels. For example, constituents other than benzene that were identified as concerns by the commenter were either detected below the detection limit or not detected in at least 75% of the coking and tar refining wastewater samples collected by EPA. Since benzene is the only constituent of concern that is typically and frequently present at concentrations of regulatory concern and is a contaminant that is regulated by both the Toxicity Characteristic, EPA believes that wastewaters will be adequately regulated by both the TC rule and Effluent Guidelines for Industrial Point Source Discharges under the Clean Water Act. Any wastewater that exhibits the TC and is land disposed prior to receiving adequate treatment (or release through the Clean Water Act programs) must comply with all RCRA requirements.

Raw wastewater releases are unlikely for several reasons. First, a statutory ban exists on the disposal of liquids in landfills. Also, all facilities in this industry have closed their surface impoundments and lagoons in favor of more modern treatment plants. While problems existed in the past with wastewaters being mixed with other process wastes and causing environmental problems, such releases are less likely to happen, and, if they did, would cause the released materials to be a hazardous waste mixture (as described on page 35780 of the July 26, 1991 proposal). Lastly, the wastewater treatment plants at the coke by-products facilities have been or are being upgraded in compliance with the Clean Water Act and other EPA regulatory programs. Many of the upgraded plants use biological treatment process that may degrade both benzene and PAHs of concern below levels of regulatory concern.

One commenter stated that EPA is required to list a waste as hazardous if it exhibits any of the hazardous waste characteristics and cited 40 CFR 261.11(a) (1). EPA would like to clarify here that when considering a solid waste for listing, the Administrator *may* list a waste on the basis that it exhibits a hazardous waste characteristic but this is not a requirement. Indeed, a policy that required all wastes exhibiting a characteristic to be listed would render subpart C of part 261 meaningless. Section 261.11 reads, "The Administrator shall list a solid waste as a hazardous waste only upon determining that the solid waste meets one of the following criteria: (1) It exhibits any of the characteristics of hazardous waste identified in Subpart C * * * while the Agency has the authority to list a waste based solely on this criterion, the language of this section does not mean that the Agency is required to list upon determining that a waste exhibits a characteristic.

F. Basis for Listing

As stated in the preamble to the proposed rule, the Agency has based today's listing determination on the criteria set forth in 40 CFR 261.11(a)(3). In the preamble to the July 1991 proposed rule, EPA provided a detailed discussion of the basis for listing K141–L145, K147 and K148. The discussion included quantitative data on the concentrations of constituents of concern found in the wastes, summaries of the known health effects of the constituents of concern, data describing the relative persistence and mobility of the constituents of concern, mismanagement case studies, and an analysis of the relative hazards posed by the wastes. In general, the information presented in the preamble to the proposed rule remains the most current available to EPA and serves as the basis for today's listings for K141 through K145, K147, and K148.

In the preamble to the proposed rule, EPA provided a list of constituents found to be present in the wastes that were not selected as constituents of concern at the time of proposal, and stated that additional constituents may be added upon promulgation based upon the consideration of comments and/or additional data (56 FR 35772). After reviewing the analytical data presented in the Background Document to the proposed rule and the current health effects information on the constituents present in the wastes, one additional constituent that appeared on that list, chrysene, has been selected as a constituent of concern. As stated in the preamble to the proposed rule, the addition of chrysene to the list of constituents of concern has no effect on the Agency's ultimate decision to list these wastes as hazardous. Tables 2 and 3 are revised versions of Tables 5, 6, and 7 from the preamble to the proposed rule; they present the selected constituents of concerns in each of the newly listed wastes, and the range of measured concentrations of constituents in coke by-products and tar refining products.

In addition, the health effects information for many of the constituents of concern has been revised. Indeno (1, 2, 3-cd)pyrene has been raised from a possible human carcinogen (Class C) to a probable human carcinogen (Class B), and the qualitative information upon which this change was based is provided on EPA's Integrated Risk Information System (IRIS). Because the health-effects information on IRIS is peer reviewed by inter-Agency workgroups that reach consensus decisions regarding the data, the new carcinogen classification is considered scientifically sound. (More information regarding this change and IRIS is included in the background document to today's rule.)

Also, the health-based limits have been revised slightly for benzo(a)pyrene, benzo(b and k)fluoranthene, indeno(1, 2, 3-cd)pyrene, benz(a)anthracene, and naphthalene. In all cases, the change is two orders of magnitude or less and does not affect the results of the listing analyses which indicate that the wastes listed in today's rulemaking should be listed as hazardous. The specific changes are as follows:

TABLE 2.—CONSTITUENTS OF CONCERN

Constituents	K141	K142	K143	K144	K145	K147	K148
Benzene	X	X	X	X	X	X	
Benz(a)anthracene	X	X	X	X	X	X	X
Benzo(a)pyrene	X	X	X	X	X	X	X
Benzo(b and k)fluoranthene	X	X	X	X	X	X	X
Chrysene	X	X	X	X	X	X	X
Dibenz(a,h)anthracene	X	X		X	X	X	X
Indeno(1,2,3-cd)pyrene	X	X		X		X	X
Naphthalene	X	X	X	X	X	X	

NOTE: X indicates that the constituent has been found to be present at levels of regulatory concern in the individual waste stream.

TABLE 3.—COKE AND COKE BY-PRODUCT WASTES: CONSTITUENTS OF CONCERN AND RANGE OF MEASURED CONCENTRATIONS

[All Values in PPM]

Constituent	K141	K142		K143		K144		K145	
	Process residues from coal tar recovery[a]	Tar Storage Tank Residues		Residues from light oil processing		Wastewater treatment sludges from light oil refining		Residues from naphthalene collection and recovery	
		Range	Avg.	Range	Avg.	Range	Avg.	Range	Avg.
Benzene	3,850	230–290	260	39–8,500	1,600	200–14,000	3,000	120–3,000	1,000
Benz(a)anthracene	7,850	5,400–7,400	6,600	ND–320	[b]69	<15–140	[b]68	<3–<96	[b]22
Benzo(a)pyrene	8,450	4,500–8,300	6,500	<10–130	[b]34	<20–130	[b]65	ND–22	[b]7
Benzo(b)fluoranthene[c]	5,450	5,200–10,000	7,500	<5–230	[b]59	<15–220	[b]75	2.3–48	[b]26
Benzo (K) fluoranthene [c]									
Chrysene	7,950	4,000–7,400	6,000	<5–250	[b]59	<15–120	[b]66	2.7–<96	[b]22
Dibenz(a,h)anthracene	1,750	720–1,600	1,000	ND–<500	[b]38	7<–<61	[b]15	ND–5	[b]1.3
Indeno (1,2,3-cd)pyrene	6,150	2,000–4,100	2,900	ND–<500	[b]40	<15–77	[b]37	ND–9.9	[b]4
Naphthalene	95,000	32,000–84,000	55,000	1,400–480,000	52,000	360–53,000	27,000	5.7–300,000	140,000

[a] Only one data point exists. However, this residual is presumed to be comparable in composition to tar decanter sludge (listed waste K087).
[b] Arithmetic averages are based on one half the quantitation limit for constituents detected below quantitation limits and zero for constituents no detected (ND).
[c] GC peak resolution was not adequate to provide quantitation of the two isomers individually. The results shown are the sum of the two isomers.
Source: Background Document.

Constituent	K147 Tar storage tank residues		K148 Tar Distillation residuals	
	Range	Avg.	Range	Avg.
Benzene	230–290	260	NA	NA
Benz(a)anthracene	5,400–7,400	6,600	160–10,000	4,500
Benzo(a)pyrene	4,500–8,300	6,500	330–7,300	3,600
Benzo(b)fluoranthene*				
Benzo(k)fluoranthene*	5,200–10,000	7,500	150–13,000	6,100
Chrysene	4,000–7,400	6,000	240–7,900	3,800
Dibenz(a,h)anthracene	720–1,600	1,000	36–1,400	800
Indeno(1,2,3-cd)pyrene	2,000–4,100	2,900	110–3,300	1,700
Naphthalene	32,000–84,000	55,000	17–2,400	850

*GC peak resolution was not adequate to provide quantitation of the two isomers individually. The results shown are the sum of the two isomers.
NA—Constituent not analyzed (volatiles were not anticipated in still bottoms that have been heated to high temperatures).
Source: Background.

On July 17, 1992, (57 FR 31776) the Agency promulgated an MCL of $2x10^{-4}$ mg/L for benzo(a)pyrene. As indicated in the preamble to the proposed rule, EPA uses promulgated Maximum Contamination Limits (MCLs) when available. Therefore, the newly finalized MCL is being used in today's rule.

In addition, in April 1992, the Agency verified a risk specific dose (RSD) of $1.7x10^{-7}$ mg/kg/day for benzo(a)pyrene. This RSD was then used to determine health-based numbers for benzo (b and k) fluoranthene, chrysene, and indeno(1,2,3-cd)pyrene, which are calculated relative to the potency of benzo(a)pyrene. More information regarding these calculations and the reasons for the adjustments to them is provided in the background document to today's rule.

The same study used as the basis for the proposed level of concern for naphthalene is used for the level of concern used in today's rule. However, the revised provisional oral RfD for naphthalene was raised one order of magnitude (from 0.004 to 0.04) when the uncertainty factor was decreased from 10,000 to 1,000 (since the proposal). The revised provisional RfD is listed in the Annual 1992 Health Effects Assessment Summary Tables (HEAST). For more information on the changes in the health-based numbers for naphthalene, see the Background Document to today's rule.

A 1986 reference was the source for the proposed RSD of $3.2x10^{-7}$ mg/kg/day for benz(a)anthracene. However, a new 1988 source was identified which indicates a proposed RSD of $4.7x10^{-8}$ mg/kg/day. All of these new references are included in the docket to today's rule.

The Agency believes that these changes have no effect on the conclusion that the constituents of concern in the wastes being listed today are systemic toxicants and/or carcinogens present in concentrations capable of causing adverse health effects and therefore have no effect on today's ultimate listing decision. The constituents of concern are present at high enough concentrations to exceed both the proposed levels of concern, most of which were higher than the concentrations of concern used in today's rule, and those used in today's rule.

One commenter requested that the Agency base the health-based concentration limits on proposed MCLs, instead of RSDs, when available. Historically, final listing determinations have not been based on proposed health-based numbers. The Agency has recently proposed, in another rulemaking, the use of proposed MCLs to establish jurisdictional boundaries of RCRA subtitle C. (See 57 FR 21450–21522, May 20, 1992.) Since that issue remains unresolved, the Agency chooses not to use proposed MCLs for this rulemaking. Moreover, the adoption of proposed MCLs for the applicable constituents of concerns in today's rule would not change the overall conclusion regarding the hazard posed by the wastes due to the extremely high concentrations of the constituents of concern in the wastes. Thus, as shown in Tables 4–4F and 5, the health-based limits for the constituents of concern continue to rely on Reference Doses (RfDs), Risk-Specific Doses (RSDs), and final MCLs. For more information on the adoption of MCLs for benzo(a)pyrene and not other PAHs, see the Phase V drinking water rule, published July 17, 1992 (57 FR 31776).

Tables 4 through 4F are revised versions of Tables 8 through 8F of the proposed rule. They summarize the Agency's analysis of the hazards posed by the constituents of concern present in the listed wastes and products by presenting the average concentrations of the previous and additional hazardous constituents in the wastes, the updated health-based water concentration limits and updated hypothetical environmental exposure factors. In this analysis, EPA projected ground-water concentrations for the constituents of concern based on average waste concentrations (rather than maximum concentrations) and assuming three dilution and attenuation factors: 100, 1,000, and 10,000. These three levels encompass a broad range of dilution/attenuation factors (DAFs). The drinking water well concentrations calculated for dilution/attenuation levels of 100, 1,000, and 10,000 make the assumption that the concentration of each constituent of concern in the well water would be 1 percent, 0.1 percent, and 0.01 percent, respectively, of its average concentration in the waste. The calculated ratios of estimated drinking water concentration values to health-based water concentration-limit values presented in these tables serve to illustrate that, under the assumptions used here, even if only 0.01 percent of the average constituent levels in the wastes (i.e., HEEF of 10,000) reaches environmental receptors, the exposure concentrations could exceed the health-based levels of concern by up to five orders of magnitude.

TABLE 4.—BASIS FOR LISTING: HEALTH EFFECTS OF THE CONSTITUENTS OF CONCERN IN K141

Hazardous constituent	Average waste conc. detected (ppm)	Health-based water concentration limits (ppm)	Basic [a]	Estimated	Drinking conc.[b]	Well (ppm)	Calculated based limit	Conc. to ratios[c]	Health—
				HEEF 100	HEEF 1000	HEEF 10,000	HEEF 100	HEEF 1000	HEEF 10,000
Benzene	3,850	5×10^{-3}	MCL (A)	38.5	3.85	0.385	7,700	770	77
Benz(a)anthracene	7,850	2×10^{-6}	RSD (B_2)	78.5	7.85	0.785	39,000,000	3,900,000	390,000
Benzo(a)pyrene	8,450	2×10^{-4}	MCL (B_2)	84.5	8.45	0.845	420,000	42,000	4,200
Benzo(b)fluoranthene, Benzo(k)fluoranthene [d].	5,450	4×10^{-5}	RSD (B_2)	54.5	5.45	0.545	1,400,000	140,000	14,000
Chrysene	7,950	5×10^{-4}	RSD (B_2)	79.5	7.95	0.795	160,000	16,000	1,600
Dibenz(a,h)anthracene	1,750	7×10^{-7}	RSD (B_2)	17.5	1.75	0.175	25,000,000	2,500,000	250,000
Indeno(1,2,3-cd)pyrene	6,150	4×10^{-4}	RSD (B_2)	61.5	6.15	0.615	150,000	15,000	1,500
Naphthalene	95,000	1	RfD	950	95	9.5	950	95	9.5

[a] Reference Dose (RfD), Risk-Specific Dose (RSD), and Maximum Contaminant Level (MCL) are explained in the Background Document to today's rule, as are the classes of carcinogens. Classes A and B carcinogens are based on exposure limits at a 10^{-6} risk level.

[b] Calculated for three hypothetical environmental exposure factors (HEEFs).

[c] Ratio obtained by dividing values in estimated drinking well concentration column by values in health-based, water concentration limit column for all three HEEFs.

[d] GC peak resolution was not adequate to provide quantitation of the two isomers individually. The results show the sum of the two isomers. Source: Background Document.

TABLE 4A.—BASIS FOR LISTING: HEALTH EFFECTS OF THE CONSTITUENTS OF CONCERN IN K142

Hazardous constituent	Average waste conc. detected (ppm)	Health-based water concentration limits (ppm)	Basis [a]	Estimated	Drinking conc.[b]	Well (ppm)	Calculated based limit	Conc. to ratios [c]	Health—
				HEEF 100	HEEF 1000	HEEF 10,000	HEEF 100	HEEF 1000	HEEF 10,000
Benzene	260	5×10^{-3}	MCL (A)	2.6	0.26	0.026	520	52	5
Benz(a)anthracene	6,600	2×10^{-6}	RSD (B_2)	66	6.6	0.66	33,000,000	3,300,000	330,000
Benzo(a)pyrene	6,500	2×10^{-4}	MCL (B_2)	65	6.5	0.65	330,000	33,000	3,300
Benzo(b)fluoranthene, Benzo(k)fluoranthene [d].	7,500	4×10^{-5}	RSD (B_2)	75	7.5	0.75	1,900,000	190,000	19,000
Chrysene	6,000	5×10^{-4}	RSD (B_2)	60	6	0.6	120,000	12,000	1,200
Dibenz(a,h)anthracene	1,000	7×10^{-7}	RSD (B_2)	10	1	0.1	14,000,000	1,400,000	140,000
Indenol(1,2,3-cd)pyrene	2,900	4×10^{-4}	RSD (B_2)	29	2.9	0.29	73,000	7,300	730
Naphthalene	55,000	1	RfD	550	55	5.5	550	55	5.5

a Reference Dose (RfD), Risk-Specific Dose (RSD), and Maximum Contaminant Level (MCL) are explained in the Background Document to today's rule, as are the classes of carcinogens. Class A and B carcinogens are based on exposure limits at a 10^{-6} risk level.

b Calculated for three hypothetical environmental exposure factors (HEEFs).

c Ratio obtained by dividing values in estimated drinking well concentration column by values in health-based, water concentration limit column for all three HEEFs.

d GC peak resolution was not adequate to provide quantitation of the two isomers individually. The results show the sum of the two isomers. Source: Background Document.

TABLE 4B.—BASIS FOR LISTING: HEALTH EFFECTS OF THE CONSTITUENTS OF CONCERN IN K143

Hazardous constituent	Average waste conc. detected (ppm)	Health-based water concentration limits (ppm)	Basis [a]	Estimated	Drinking conc.[b]	Well (ppm)	Calculated based limit	Conc. to Ratios [c]	Health—
				HEEF 100	HEEF 1000	HEEF 10,000	HEEF 100	HEEF 1000	HEEF 10,000
Benzene	1,600	5×10^{-3}	MCL (A)	16	1.6	0.16	3,200	320	32
Benz(a)anthracene	69	2×10^{-6}	RSD (B_2)	0.69	0.069	0.007	350,000	35,000	3,500
Benzo(a)pyrene	34	2×10^{-4}	MCL(B_2)	0.34	0.034	0.003	1,700	170	17
Benzo(b)fluoranthene, Benzo(k)fluoranthene [d].	59	4×10^{-5}	RSD (B_2)	0.59	0.059	0.006	15,000	1,500	150
Chrysene	59	5×10^{-4}	RSD (B_2)	0.59	0.059	0.006	1,200	120	1.2
Naphthalene	52,000	1	RfD	520	52	5.2	520	52	5.2

[a] Reference Dose (RfD), Risk-Specific Dose (RSD), and Maximum Contaminant Level (MCL) are explained in the Background Document to today's rule, as are the classes of carcinogens. Class A and B carcinogens are based on exposure limits at a 10^{-6} risk level.

[b] Calculated for three hypothetical environmental exposure factors (HEEFs).

[c] Ratio obtained by dividing values in estimated drinking well concentration column by values in health-based, water concentration limit column for all three HEEFs.

[d] GC peak resolution was not adequate to provide quantitation of the two isomers individually. The results show the sum of the two isomers. Source: Background Document.

TABLE 4C.—BASIS FOR LISTING: HEALTH EFFECTS OF THE CONSTITUENTS OF CONCERN IN K144

Hazardous constituent	Average waste conc. detected (ppm)	Health-based water concentration limits (ppm)	Basis [a]	Estimated Drinking conc.[b]		Well (ppm)	Calculated based limit	Conc. to ratios [c]	Health—
				HEEF 100	HEEF 1000	HEEF 10,000	HEEF 100	HEEF 1000	HEEF 10,000
Benzene	3,000	5×10^{-3}	MCL (A)	30	3.0	0.30	6,000	600	60
Benz(a)anthracene	68	2×10^{-6}	RSD (B_2)	0.68	0.068	0.007	340,000	34,000	3,500
Benzo(a)pyrene	65	2×10^{-4}	MCL (B_2)	0.65	0.065	0.007	3,300	330	33
Benzo(b)fluoranthene, Benzo(k)fluoranthene [d].	75	4×10^{-5}	RSD (B_2)	0.75	0.075	0.008	19,000	1,900	200
Chrysene	61	5×10^{-4}	RSD (B_2)	0.61	0.061	0.006	1,200	120	12
Dibenz(a,h)anthracene	15	7×10^{-7}	RSD (B_2)	0.15	0.015	0.002	210,000	21,000	2,100
Indeno(1,2,3-cd)pyrene	37	4×10^{-4}	RSD (B_2)	0.37	0.037	0.0037	930	93	9.3
Naphthalene	27,000	1	RfD	270	27	2.7	2,70	27	2.7

[a] Reference Dose (RfD), Risk-Specific Dose (RSD), and Maximum Contaminant Level (MCL) are explained in the Background Document to today's rule, as are the classes of carcinogens. Class A and B carcinogens are based on exposure limits at a 10^{-6} risk level.

[b] Calculated for three hypothetical environmental exposure factors (HEEFs).

[c] Ratio obtained by dividing values in estimated drinking well concentration column by values in health-based, water concentration limit column for all three HEEFs.

[d] GC peak resolution was not adequate to provide quantitation of the two isomers individually. The results show the sum of the two isomers. Source: Background Document.

TABLE 4D.—BASIS FOR LISTING: HEALTH EFFECTS OF THE CONSTITUENTS OF CONCERN IN K145

Hazardous constituent	Average waste conc. detected (ppm)	Health-based water concentration limits (ppm)	Basis [a]	Estimated Drinking conc.[b]		Well (ppm)	Calculated based limit	Conc. to ratios [c]	Health—
				HEEF 100	HEEF 1000	HEEF 10,000	HEEF 100	HEEF 1000	HEEF 10,000
Benzene	1,000	5×10^{-3}	MCL (A)	10	1.0	0.10	2,000	200	20
Benz(a)anthracene	22	2×10^{-6}	RSD (B_2)	0.22	0.022	0.002	110,000	11,000	1,000
Benzo(a)pyrene	7	2×10^{-4}	MCL (B_2)	0.07	0.007	0.001	350	350	3.5
Benzo(b)fluoranthene, Benzo(k)fluoranthene [d].	26	4×10^{-5}	RSD (B_2)	0.26	0.026	0.0026	6,500	650	65
Dibenz(a,h)anthracene	15	7×10^{-7}	RSD (B_2)	0.15	0.015	0.002	210,000	21,000	2,100
Naphthalene	140,000	1	RfD	1,400	140	14	1,400	140	14

[a] Reference Dose (RfD), Risk-Specific Dose (RSD), and Maximum Contaminant Level (MCL) are explained in the Background Document to today's rule, as are the classes of carcinogens. Class A and B carcinogens are based on exposure limits at a 10^{-6} risk level.

[b] Calculated for three hypothetical environmental exposure factors (HEEFs).

[c] Ratio obtained by dividing values in estimated drinking well concentration column by values in health-based, water concentration limit column for all three HEEFs.

[d] GC peak resolution was not adequate to provide quantitation of the two isomers individually. The results show the sum of the two isomers. Source: Background Document.

TABLE 4E.—BASIS FOR LISTING: HEALTH EFFECTS OF THE CONSTITUENTS OF CONCERN IN K147

Hazardous Constituent	Average waste conc. detected (ppm)	Health-based water concentration limits (ppm)	Basis[a]	Estimated Drinking Conc.[b]		Well (ppm)	Calculated based limit	Conc. to ratios[c]	Health—
				HEEF 100	HEEF 1000	HEEF 10,000	HEEF 100	HEEF 1000	HEEF 10,000
Benzene	260	5×10^{-3}	MCL (A)	2.6	0.26	0.026	520	52	5
Benz(a)anthracene	6,600	2×10^{-6}	RSD (B_2)	66	6.6	0.66	33,000,000	3,300,000	330,000
Benzo(a)pyrene	6,500	2×10^{-4}	MCL (B_2)	65	6.5	0.65	330,000	3,300	330
Benzo(b)fluoranthene, Benzo(k)fluoranthene[d].	7,500	4×10^{-5}	RSD (B_2)	75	7.5	0.75	1,900,000	190,000	19,000
Chrysene	6,000	5×10^{-4}	RSD (B_2)	60	6	0.6	120,000	12,000	1,200
Dibenz(a,h)anthracene	1,000	7×10^{-7}	RSD (B_2)	10	1	0.1	14,000,000	1,400,000	140,000
Indeno(1,2,3-cd)pyrene	2,900	4×10^{-4}	RSD (B_2)	29	2.9	0.29	73,000	7,300	730
Naphthalene	55,000	1	RfD	550	55	5.5	550	55	5.5

[a] Reference Dose (RfD), Risk-Specific Dose (RSD), and Maximum Contaminant Level (MCL) are explained in the Background Document to today's rule, as are the classes of carcinogens. Class A and B carcinogens are based on exposure limits at a 10^{-6} risk level.

[b] Calculated for three hypothetical environmental exposure factors (HEEFs).

[c] Ratio obtained by dividing values in estimated drinking well concentration column by values in health-based, water concentration limit column for all three HEEFs.

[d] GC peak resolution was not adequate to provide quantitation of the two isomers individually. The results show the sum of the two isomers. Source: Background Document.

TABLE 4F.—BASIS FOR LISTING: HEALTH EFFECTS OF THE CONSTITUENTS OF CONCERN IN K148

Hazardous constituent	Averge waste conc. detected (ppm)	Health-based water concentration limits (ppm) [a]	Basis [a]	Estimated	Drinking conc.[b]	Well (ppm)	Calculated based limit	Conc. to ratios [c]	Health—
				HEEF 100	HEEF 1,000	HEEF 10,000	HEEF 100	HEEF 1000	HEEF 10,000
Benz(a)anthracene	4,500	2×10^{-6}	RSD (B_2)	4.5	4.5	0.45	23,000,000	2,300,000	230,00
Benzo(a)pyrene	3,600	2×10^{-4}	MCL (B_2)	3.6	3.6	0.36	180,000	18,000	1,800
Benzo(b)fluoranthene, Benzo(k)fluoranthene [d].	6,100	4×10^{-5}	RSD (B_2)	6.1	6.1	0.61	1,500,000	150,000	15,000
Chrysene	3,800	5×10^{-4}	RSD (B_2)	3.8	3.8	0.38	76,000	7,600	760
Dibenz(a,h)anthracene	800	7×10^{-7}	RSD (B_2)	0.8	0.8	0.08	11,000,000	1,100,000	110,000
Indeno(1,2,3-cd)pyrene	1,700	4×10^{-4}	RSD (C)	1.7	1.7	0.17	43,000	4,300	430

[a]Reference Dose (RfD), Risk-Specific Dose (RSD), and Maximum Contaminant Level (MCL) are explained in the Background Document to today's rule, as are the classes of carcinogens. Class A and B carcinogens are based on exposure limits at a 10^{-6} risk level.
[b]Calculated for three hypothetical environmental exposure factors (HEEFs).
[c]Ratio obtained by dividing values in estimated drinking well concentration column by values in health-based, water concentration limit column for all three HEEFs.
[d]GC peak resolution was not adequate to provide quantitation of the two isomers individually. The results show the sum of the two isomers.
Source: Background Document.

Table 5 is a revised version of Table 9 from the preamble to the proposed rule. It presents updated data on the water solubilities and partition coefficients (log K_{ow} and log K_{oc}) which, as explained in the proposed rule, provide an indication of the mobility and persistence of the constituents of concern. Several comments were submitted regarding the mobility and persistence of the constituents of concern; these comments are addressed below in the Summary of Public Comments and Responses section of this preamble.

As stated in the preamble to the proposed rule, the Agency considered the use of leachability models and subsurface fate and transport models to estimate concentrations of these constituents in drinking water. Several commenters believed that these models should have been used to determine the potential hazards posed by these wastes and products, while other commenters support the Agency's decision not to use models. This issue is addressed further in the Summary of Public Comments and Responses section of this preamble. However, as stated in the preamble, EPA continues to believe that the limitations of the available models, when applied to wastes or products generated from coking and tar refining processes, underestimate the hazard posed by the wastes.

TABLE 5.—GROUND-WATER MOBILITY AND PERSISTENCE OF CONSTITUENTS OF CONCERN

Constituents of concern	Health-based water concentration limits (ppm)	Water solubility (ppm)	Log K_{ow} [a]	Log K_{oc} [b]	Persistence
Benzene	5×10^{-3}	1.78×10^{3}	2.13	1.92	low
Benzo(a) anthracene	2×10^{-6}	5.7×10^{-3}	5.61	6.14	high
Benzo(a)pyrene	2×10^{-4}	3.8×10^{-3}	6.04	5.60–6.29	high
Benzo(b) flouranthene[c]	4×10^{-5}	1.4×10^{-2}	6.57	5.74	high
Benzo(k)fluoranthene[c]	4×10^{-5}	5.5×10^{-4}	6.85	6.64	high
Chrysene	5×10^{-4}	1.8×10^{-3}	5.60	5.39	high
Dibenz(a,h)anthracene	7×10^{-7}	5.0×10^{-4}	6.50	6.22	high
Indeno(1,2,3-cd)pyrene	4×10^{-4}	5.3×10^{-4}	5.97	7.49	high
Naphthalene	1	3.17×10^{1}	3.30	3.04	high

Source: Montgomery, John H., *Groundwater Chemicals Desk Reference, 1990.*
[a]K_{ow}=Octanol-water partition coefficient.
[b]K_{oc}=Soil sorption coefficient.
[c]The health-based limit for benzo(b)fluoranthene was also applied to benzo(k)fluoranthene because the GC peak resolution was not adequate to provide quantitation of the isomers individually, and therefore, the results are the sum of the two isomers.

III. Summary of Public Comments and Responses

A. Hazardous Waste Listings

Several comments were submitted regarding the technical basis used by the Agency in making the listing determinations on wastes generated from the coking and tar refining industries. Five commenters expressed concerns over leachability and mobility, ground-water fate and transport models, dilution and attenuation assumptions, carcinogenicity risk levels, persistence, and mismanagement case studies. The substance of these comments is explained in more detail below.

As explained in the preamble to the proposed rule, the Agency believes that the use of available leaching and subsurface fate and transport models is not appropriate for evaluating wastes and products generated during the production, recovery, and refining of coke by-products (see FR 35769). Three commenters disagree that these models (*i.e.*, the Toxicity Characteristic Leaching Procedure (TCLP), the EPA Composite Model for Landfills (EPACML), and the Organic Leachate Model (OLM)) would underestimate the migration and transport of hazardous constituents to a drinking water source, as stated by the Agency.

Three commenters believe that the TCLP data should be considered as a basis for listing wastes generated from the coking and tar refining industries. They believe that the leaching procedure results in higher leached concentrations of constituents than would occur in an actual environmental setting due to the method's particle size reduction step. One commenter supports the Agency's decision not to rely on TCLP data as a

basis for listing because of the belief that the TCLP results in lower concentrations of constituents than would occur in the environment.

The Agency notes that the TCLP was developed by evaluating various laboratory methods that use different extraction media, extraction procedures, and liquid: solid ratios, and by determining the method which best obtained the concentrations of inorganic and organic constituents found in leachate from a simulated co-disposal landfill scenario. The simulated leachate was generated from large-scale columns, called lysimeters, packed with municipal waste and using this municipal waste leachate as a leaching fluid in studies on industrial wastes. Particle size reduction is used to simulate both the size reduction caused by the action of heavy landfill equipment and the degradation of structural integrity caused by repeated wet/dry and freeze/thaw cycles. The laboratory conditions selected for the TCLP were those which best simulated the concentrations of inorganic and organic constituents in leachate from wastes co-disposed with municipal wastes in landfills.

The TCLP is a reasonable worst-case mismanagement scenario which the Agency has historically used to determine whether a waste should be classified as hazardous. However, for wastes that clog the glass fiber filter utilized in the TCLP, it has been shown that portions of wastes that are mobile in soil columns are often classified as solids by TCLP standards (RTI, 1988). As stated in July's proposed rule, the tarry samples analyzed in support of today's rulemaking were found to pose problems with sample homogenization, filtration, and dispersion of solids in the leaching medium due to the varying amounts of tar in the wastes. Due to these analytical problems, the Agency maintains its belief that the TCLP results may underestimate the concentrations of constituents in leachates generated from the proposed wastes and should not be used as a basis for listing these wastes.

Three commenters also requested that EPA reconsider the use of the OLM and the EPACML. One commenter stated that the Agency is freely disregarding the TCLP and OLM results for this listing decision and that the models are not serving their mandated purpose. This commenter also stated that even though the EPACML may not account for immiscible flow conditions, the constituent concentrations at drinking water wells would not be underestimated. Another commenter stated that the OLM and EPACML apply more realistic environmental exposure factors (than the HEEFs) and that these models actually overestimate rather than underestimate constituent mobility because they do not account for biodegradation.

As described in the proposed rule, the EPACML estimates the dilution and attenuation of specific constituents during migration from leachate at the bottom of an unlined landfill (see U.S. EPA, "Background Document for EPA's Composite Landfill Model (EPACML)", 1990). If the Agency had applied the EPACML as it has in past rulemakings, leachate would have been diluted by a factor of 135 (at the 85th percentile of the probability distribution). (See 55 FR 11798, March 29, 1990). If hazardous constituent levels were to be reduced by that factor, the calculated constituent levels at the receptor sites would still exceed the health-based numbers by several orders of magnitude. However, the Agency notes that problems still exist in applying this model to these wastes. Due to the physical and chemical nature of the proposed listed wastes, immiscible flow may occur. Migration of constituents in the immiscible layer may be underestimated by a model that considers only homogenous flow. The underestimation occurs because the EPACML model does not account for the increased constituent concentrations that reach the receptor well in spiked patterns. The effect could be pronounced with wastes containing constituents in high concentrations. Because of these concerns, the Agency did not apply the EPACML to the proposed listed wastes.

The OLM is an empirical equation which was developed through application of modeling techniques to a data base of waste constituent concentrations and experimentally measured leachate concentrations (see 51 FR 41082 and 50 FR 48886). The OLM takes into account the concentrations of organic constituents and their aqueous solubility. EPA believes that, with the possible exception of tar distillation residues, the wastes proposed for listing may be subject to significant cosolvency effects. However, the OLM does not consider cosolvency effects and therefore tends to underestimate pollutant mobility in waste matrices where cosolvency may be significant. The Agency's response to the issue of biodegradation is discussed below.

Fate and transport models serve their intended purpose when applied to appropriate situations. Although the Agency prefers to use specific case studies and/or general modeling results to estimate potential risks from the mismanagement of wastes, the Agency is not required to use a particular model in evaluating the hazards posed by certain wastes. In this situation, however, due to the physical and chemical nature of the coke by-product wastes, the Agency selected an alternative approach to evaluate the potential hazard posed by these wastes. The Agency selected the use of Hypothetical Environmental Exposure Factors (HEEFs), applied to average constituent concentrations found in the wastes, as an alternative approach to estimating the mobility of constituents from the waste under a wide range of environmental conditions. Using this approach, the Agency concludes that under a range of possible environmental conditions, these wastes would pose a substantial hazard to human health and the environment if mismanaged.

The Agency recognizes that the basis for listing wastes as hazardous since 1980 has not always explicitly included the use of models to predict concentrations of hazardous constituents at receptor sites. Rather, EPA has relied on a weight-of-evidence approach including such factors as damage incidents and probability of mismanagement. The recently proposed Hazardous Waste Identification Rule (HWIR, 57 FR 21450—21522, May 20, 1992) contains several options that, depending on which is promulgated, may change the Agency's procedure for the identification and listing of hazardous wastes in the future.

Two commenters claimed that the Agency did not consider biodegradation in its risk analysis and therefore, overestimated the concentration of constituents at the receptor well. The commenters provided general examples of successful biodegradation under aerobic conditions but did not provide data to support these claims or examples under anaerobic conditions. As stated in the proposed rule, the Agency believes that benzene and PAHs are not expected to biodegrade in ground water due to the relatively low biological activity present in the ground-water system. In addition, the persistence of the contaminants of concern is demonstrated by their presence in soil, ground water and surface water at the mismanagement sites described in the proposed rule.

One commenter submitted a journal article that describes a testing program of wells serving water-supply systems in California in which benzene is either undetected or detected in small concentrations at the majority of wells. The article suggests that, due to the

large number of leaking underground storage tanks existing throughout the state, the absence of benzene near water-supply wells implies that biodegradation is occurring in the ground water.

The Agency agrees with the commenter only in that benzene generally biodegrades in ground waters with environments that are conducive to high biological activity (*i.e.*, with high dissolved oxygen levels or acclimated microorganisms). The Agency notes benzene has been found to be present in the ground water at receptor wells of several contaminated sites described in the preamble of the proposed rule. For example, at a steel manufacturing plant operating in New York from 1920 through 1983 on Lake Erie, benzene was detected at concentrations up to 340 ppm at ground-water monitoring wells installed near two waste management areas, a pit and a landfill, which received coking wastes almost exclusively. Thus, the Agency maintains that benzene is a persistent and mobile constituent of concern and that wastes containing benzene in sufficiently high concentrations may pose a hazard when improperly managed.

Several commenters questioned the Agency's concern over cosolvency effects relative to the use of the OLM in evaluating the proposed wastes. The commenters believed that use of the OLM should be reconsidered because the Land Disposal Restrictions for solvents prevent the disposal of solvents in landfills. Therefore, the commenters believed that cosolvency effects should not be considered and that the proposed wastes should be evaluated using the OLM. The Agency's concern over cosolvency effects is not directed at the commingling of the proposed listed wastes with listed solvents which must be treated prior to land disposal. The mobility of constituents may also be enhanced by the presence of organic phases that behave as solvents, such as benzene, from these and other codisposed hazardous wastes, or carboxylic acids from municipal waste leachates.

Two commenters criticized the use of and values for the Hypothetical Environmental Exposure Factors (HEEFs) because they believed the factor to be unrealistic as compared to the dilution and attenuation that occurs in actual environmental conditions. One commenter compared leaching and mobility factors generated by using the OLM and a dilution and attenuation factor (DAF) of 12 (which was generated by the EPACML) to the HEEFs used to support this listing determination and stated that the OLM factors are more realistic than the HEEFs because they are higher. Another commenter believed that the use of HEEFs is unrealistic because the estimated drinking well concentrations exceed the water solubilities for some constituents in some wastes and therefore, the constituents cannot be present in ground water at these concentrations. The commenters also stated that the Agency did not provide a scientific or sound basis for the HEEFs.

HEEFs are meant to be benchmarks of projected dilution and attenuation, and, as such, allow EPA to project potential exposure scenarios to see if health-based criteria can be exceeded under mismanagement conditions. The Agency believes these comparisons add to the weight-of-evidence approach used to determine whether or not a waste is potentially hazardous. In this case, several constituents exceed health-based criteria by several orders of magnitude at HEEFs used in this rulemaking to project dilution. (See discussion in "Basis for Listing," section II.F. above.) In addition, the Agency believes that the HEEFs should not be compared to values generated by the OLM since, as explained earlier, the OLM may significantly underestimate the constituent concentrations leached from these wastes due to the oily/tarry nature of the wastes and the possibility of immiscible flow of migrating constituents. Although other methodologies (*i.e.*, TCLP) tend to underestimate hazardous constituent concentrations in these wastes, they still may show unacceptably high constituent concentrations.

The Agency selected the use of HEEFs to evaluate the potential hazards associated with mismanagement of the proposed listed wastes because, as explained above, the models generally used to evaluate potential release, and fate and transport of hazardous constituents from landfills may not be appropriate for evaluating wastes from the coking and tar refining industries. As stated in the preamble to the proposed rule (56 *FR* 35769), "(t)he concentrations and toxicities of hazardous constituents in the wastes are of such a magnitude that, even under conservative assumptions regarding the potential for release of the constituents to the environment (use of HEEFs) and their subsequent transport in the subsurface environment, improper management of the wastes poses an unacceptable health risk."

This same range of 1.0 to 0.01 percent of the waste disposed reaching the point of exposure was also used as a basis for listing three categories of wastes from wood preserving operations that use chlorophenolic, creosote, and/or inorganic (arsenical and chromium) preservatives (see 55 FR 50450; December 6, 1990). The Agency has used a Dilution Attenuation Factor (DAF) of 100 for evaluating the mobility of constituents. The TCLP only uses a dilution and attenuation factor of 20. The Agency believes that a HEEF of 20 times 100 (or 2,000) would represent a way of projecting a benchmark of the leachability and mobility of constituents from a waste. Therefore, a HEEF of 10,000, in comparison, could represent a conservative basis for evaluating the hazard posed by a waste considering the uncertainty associated with estimating dilution and attenuation. The Agency notes that each of the constituents of concern have waste concentrations that equal or exceed their health-based limits assuming a HEEF of 10,000.

The Agency relies on information regarding the solubility of a pure substance in water as one of several indicators of the mobility of a constituent in ground water. The Agency does not believe that water solubilities should be quantitatively compared to the solubility of the substance in ground water that has been contaminated by a mismanaged waste because this does not represent a pure substance in water. Solubilities are dependent on many factors, including the presence of an organic or oily phase. The phenomenon of constituents occurring in ground water at concentrations exceeding their water solubilities is not completely understood; however, it has been demonstrated at a number of contaminated sites, as presented in the mismanagement case studies of the proposed rule. In addition, even if the concentrations of these constituents in ground-water systems were limited to the solubility of the pure substance in water, the estimated drinking well concentrations would exceed the health-based water concentration limits by several orders of magnitude. Several commenters supported the Agency's position of evaluating constituent solubilities based on mismanagement cases at a site.

Based on the information in Tables 4–4F of todays's rule, the concentrations of hazardous constituents in the proposed listed wastes indicate that the wastes will have an adverse impact on human health and the environment. For example, even with an estimated leaching and mobility factor as high as 10,000, the exposure concentrations for each of the wastes are at least equal to

the health-based level for at least one constituent of concern, and up to five orders of magnitude greater for another constituent of concern. This approach demonstrates that these wastes pose significant hazards to human health and the environment over a wide range of potential mobility and transport scenarios.

One commenter questioned the 10^{-5} and 10^{-6} risk levels used for carcinogens, stating that the National Contingency Plan under CERCLA uses 10^{-4} to 10^{-6} risk levels as a basis for cleanup standards at Superfund sites. When developing its preliminary remediation goals at Superfund sites, EPA uses 10^{-6} as a point of departure, which is considered the most desirable risk level, all things being equal, in establishing remediation goals (55 FR 8717; March 8, 1990). Site-specific factors that determine the overall risk to human health and the environment, remedy-specific factors that are based on the treatment technology, and potential future uses for the site and wastes are all factors used in determining the point within the range of 10^{-4} to 10^{-6} that defines the final cleanup standard. The Listing Program under RCRA, however, must evaluate certain wastes to determine if they are hazardous under all plausible mismanagement scenarios. The Agency does not rely on future use and site-specific information in its evaluation. Therefore, the Agency believes that there is no basis to depart from the more protective risk factor of 10^{-6}. The Agency notes, however, that even if the lower risk factor of 10^{-4} was used, the highly concentrate coke by-product wastes would still exceed the health-based limits (albeit for fewer constituents) and would still be listed today as hazardous wastes.

Another commenter claimed that the RfDs and RSDs used to develop the health-based concentration limits do not have a regulatory basis because they are not promulgated standards. The Agency does not "propose" health-based limits for promulgation as rules when listing wastes, as suggested by the commenter, because unlike Agency rules, these numbers do not prescribe behavior. Comparison of the health-based limits to the waste concentrations is only used in the initial listing process as a tool for demonstrating "(t)he nature of the toxicity presented by the constituent" in the waste, one of the criteria the Agency uses to make the listing determination (See 40 CFR 261.11(a)(3)(i)). These numbers serve as scientific guidance to the Agency in making its listing determinations. The RfDs and RSDs were presented in the proposed rule and made available for comment. The public had the opportunity to comment on the Agency's choice to use specific limits, the soundness of those limits and their underlying assumptions, and, most importantly, the Agency's overall assessment that those wastes possess toxic constituents in levels capable of causing harm to human health and the environment. However, only the waste listings are finalized; the health-based limits are used to support the listing decision. Additional information regarding the health-based limits and assumptions is provided in the background document to this rule.

Several comments were submitted regarding specific proposed listed wastes. Four commenters stated that K148, residues from coal tar distillation, does not exhibit leachability. Two commenters substantiated this claim with TCLP data and two other commenters related the leachability of K148 to that of asphalt because it has a higher melting point and asphalt binders decrease the leachability of arsenic wastes. As explained earlier in this section, the Agency does not believe that the TCLP can be used to determine the leachability of wastes such as K148 that are difficult to filter. In addition, the Agency did not receive any data to substantiate reduced leachability of K148, as compared to asphalt, particularly in the presence of other coking and/or tar refining wastes.

Several commenters questioned the relationship of the mismanagement case histories in the proposed rule (56 FR 35775) to the proposed listed wastes and believed that the Agency has not demonstrated that the wastes are capable of posing human health and environmental damage. One commenter believed that the Agency must cite actual human exposure in order to demonstrate that the wastes are capable of posing substantial harm. The Agency believes that, from the nature of the activities performed at these sites (i.e., primarily coking and tar refining operations), it is reasonable to conclude that the resulting environmental contamination was caused primarily by wastes generated from these operations. Due to the extent of contamination found at these sites relative to the health-based levels, the data are sufficient to demonstrate that potential exposure and harm exist, which is all that is required by 40 CFR 261.11(a)(3).

One commenter submitted detailed analytical concerns on one of the 13 analytical data reports used to support these listings. Overall, many of the comments addressed specific quality assurance/quality control steps in the analytical process. The Agency agrees with some of the quality concerns which address constituents that were not used to support the listing. However, most of the comments were either misinterpretations of the requirements of methods from "Test Methods for Evaluating Solid Waste: Physical/Chemical Methods" (SW–846), or they addressed requirements of the Contract Laboratory Program (CLP) instead of the SW–846 methods. These concerns are each addressed in detail and are available in the background document for today's rule. The Agency further notes that the data presented in the particular analytical data report in question support the listing of only one waste, and in addition, represent the lowest end of the concentration ranges found for the constituents of concern for this waste. EPA does not believe that any of the analytical comments affect the conclusions presented in today's rulemaking.

One commenter requested that the Agency clarify whether the K148 listing includes tar plant wastewater collection sump sludges. The Agency reviewed the specific waste streams that were originally grouped under the heading of tar plant wastewater collection sump sludges from the RCRA 3007 Questionnaires completed in 1985 and determined that these waste streams were incorrectly described as tar plant wastewater collection sludges and are already addressed in today's listings. Specifically, these waste streams were generated during coke by-product recovery operations rather than tar refining operations. Most of these waste streams are actually residues from sumps that collect wastewaters (i.e., from tar dewatering) generated from the tar recovery process and are encompassed by K141, process residues from the recovery of coal tar. One of the waste streams formerly grouped under the tar plant wastewater collection sump sludges heading is actually the tar product stream that is fed directly to the tar dehydrator.

The same commenter also requested that EPA discuss the final listing determination for each of the coke by-product wastes specified in the proposed Consent Decree which resolves issues raised in *EDF* vs. *Reilly*, Civ. No. 89–0598 (D.D.C.). The Agency has reviewed the RCRA 3007 Questionnaires and accompanying process flow diagrams which were the original sources for the waste categories specified in the consent decree and has determined that each of these wastes is addressed fully in today's rule. Table 6 presents the listing determination for

each of these wastes:

TABLE 6.—LISTING DETERMINATIONS ON WASTES IN PROPOSED CONSENT DECREE

Waste stream proposed in consent decree	Listing determination
Process residues from coal tar recovery operations including tar collection sump residue.	K141.
Tar storage tank residues	K147.
Residues from light oil plant processing units.	K143.
Wastewater treatment sludges from light oil refining, including interceptor sump sludge.	K144.[1]
Residues from naphthalene collection and recovery.	K145.
Wastewaters from coking and coke by-product operations.	No listing.
Tar storage tank residues, still bottoms, and residues from coal tar distillation.	K148.
Wastewaters from coal tar refining	No listing.
Benzol scrubber sludge	K143.
Oil/water separator effluent	No listing (wastewater).
Tar plant wastewater collection sump sludge.	K141 (see explanation in text above).
Naphthalene skimmer sludge	K145.
Wash oil circulation sludge and still residue.	K143, or K145.[2]
Primary light oil rectifier bottoms	K143.

[1] This waste stream is referred to at some facilities as wastewater sump residues rather than wastewater treatment sludges. To avoid confusion with the wastewater treatment sludges produced after combined wastewater treatment (see Figure 1), the Agency has decided to adopt the former description. The proposed language describing the waste has, therefore, been revised accordingly.

[2] When wash oil is used in light oil recovery, it is classified as K143, whereas when it is used in naphthalene recovery, it is classified as K145.

One commenter believed that the wastewater treatment sludge from coke by-product recovery wastewater should be listed as a hazardous waste. The commenter compared the data generated from tar refinery wastewaters in support of this rulemaking to data from the Best Demonstrated Available Technology (BDAT) Background Document for wastewater treatment sludges generated in the production of creosote, K035. The commenter concluded that the constituents of concern may be present at low or non-detected levels in tar refining wastewaters and still be found at high concentrations in the wastewater treatment sludges due to partitioning from the wastewaters.

The Agency does not believe it has enough information to make a listing determination at this time for these wastewater treatment sludges. As stated in the preamble to the proposed rule, EPA does not have analytical data on the concentrations of constituents of concern in these sludges. The Agency also does not believe that the data presented by the commenter justify investigation of these sludges. The sludge sample referred to by the commenter, which contained high concentrations of PAHs, was from the bottom oil layer of the oil/water separator, which precedes the wastewater treatment unit in the creosote wastewater treatment plant. The other K035 samples presented in the Background Document represent sludges generated following either biological treatment or solar evaporation and contain these constituents at concentrations two to three orders of magnitude lower than the bottom oil layer.

As stated earlier in this section, the constituents of concern were not typically and frequently found at levels of regulatory concern in the coke byproduct wastewaters and therefore, the Agency does not believe that they would be typically and frequently found at levels of regulatory concern in the wastewater treatment sludges. In addition, since a significant number of facilities use biological treatment to treat these wastewaters before discharging them to a POTW or through their NPDEs permitted outfall, even low concentrations of organics would be biologically consumed in the treatment process. Lastly, the PAHSs found in the tar refining wastewaters were generally found at concentrations an order of magnitude lower in the coke by-products wastewaters than in the creosote wastewaters. The Agency expects that concentrations of PAHs would, therefore, be lower in the coke by-products treatment sludges. This probably occurs because the heavier organic layers are removed prior to wastewater treatment in the coke by-products recovery process.

B. Recycling Exclusion

The Agency received comments from several industry groups concerning the recycling exclusions proposed on July 26, 1991 (56 FR 35787) as § 261.4(a)(10)–(12). All the commenters supported the general concept of an exclusion from the definition of solid waste for coke by-product residues that are recycled by being returned to coke ovens as a feedstock to produce coke.

Two commenters made reference to the September 14, 1991 effective date of the benzene by-product NESHAP rule as a major reason for the immediate promulgation of an exclusion at the point of generation. This compliance date forced coke oven operators to either retrofit or replace the storage vessels used for coke by-product residues. This action generated large amounts of residues that would have to be sent off-site for disposal if they were not excluded at the point they were generated. The large amounts generated would cause the facilities to exceed the 90-day accumulation limit and, thus, become subject to permitting standards. In addition to the NESHAP deadline, the effective date of the permitting standards for boilers and industrial furnaces (BIF rule; 56 FR 7134) was August 21, 1991. Absent some regulatory relief by that date, commenters asserted that coke oven operators would be forced to stop recycling coke by-product residues due to the technical infeasibility of meeting the destruction and removal standards imposed by the BIF rule.

In response to commenter concerns over the effective date of the BIF rule, because the Agency did not want to disrupt the legitimate recycling of coke by-product residues, and because large amounts of residues were being generated as a result of the NESHAPs rule, EPA issued an Administrative Stay on September 5, 1991 (56 FR 43874). The effect of this action was to stay the permitting standard of the BIF rule as they apply to coke ovens that process TC hazardous residues in the production of coke. In a later **Federal Register** notice (57 FR 27880), EPA nullified the stay by promulgating an exclusion from the definition of solid waste for coke by-product residues that exhibit the Toxicity Characteristic when they are recycled by being returned to coke ovens or mixed with coal tar. The Agency also clarified the scope of the exclusion by placing certain conditions on it (*i.e.*, no land disposal).

One commenter (an industry trade association) requested that the exclusion for coke by-product residues be expanded to encompass materials burned as fuel in blast furnaces in iron and steelmaking operations. Because the residues contain the same constituents as the final coke product, the commenter contended that burning of coke by-product residues in blast furnaces along with coke would not have a significant effect on the composition of the steel product. EPA disagrees with the commenter. Blast furnaces normally are charged with coal tar product that contains the coke by-products covered by this rule, as opposed to the actual coke by-product wastes themselves. Due to this distinction, the Agency believes that the introduction of raw by-product wastes into the blast furnace may have an adverse effect on emissions from the blast furnace. In addition, the use of by-product wastes in blast furnaces may cause other engineering problems not posed by the processing of coal tar

product. (Nor have any other interested members of the public had any opportunity to comment on this issue.) The Agency has insufficient information on the use of coke by-product wastes in blast furnaces and may evaluate this practice further in the future. Until such time, this issue is outside the scope of today's rulemaking. See also 50 FR at 49171–72, 49174 (November 29, 1985) (general discussion of use of secondary materials in blast furnaces).

Before publication of the exclusion rule on June 22, 1992, coke by-product residues that exhibited the TC as generated were solid and hazardous wastes, and had to be managed as such. If these residues were stored on-site for a period exceeding 90 days, they had to be stored in accordance with RCRA Subtitle C controls on storage, including permitting standards. If hazardous residues were shipped off-site for recycling or disposal, they were required to be shipped with a manifest. Facilities that received hazardous waste residues for recycling were required to have a RCRA permit if the residues were stored at the facility prior to recycling. Coking industry representatives indicated that this strict regulatory regime for coke by-product residues served as a disincentive for waste minimization and recycling efforts in the coke by-products industry. Over 50 percent of the commenters to the proposed rule stated that coke by-products facilities that currently do not have RCRA permits would not obtain a RCRA permit to manage the residues prior to recycling, due to the corrective action implications of a permit and the associated costs. Consequently, absent some regulatory relief, the residues would be sent off-site for incineration or disposal.

This was not the Agency's intent. As discussed in the Administrative Stay under rules existing at that time, EPA views the required pretreatment steps as part of the recycling process. The Agency recognizes that prior processing of the residues is necessary to obtain a homogeneous material suitable for charging to a coke oven with coal or mixing with coal tar. Therefore, this processing is considered an integral part of the recycling process itself and, as such, is exempt from regulation under 40 CFR 261.6(c)(1). The exemption encompasses all the units associated with the recycling operation, in this case, the process units and ball mills used to process the residues prior to reinsertion to coke ovens.

In any case, this issue is now moot because the materials are excluded from being solid waste. As long as the terms of the exclusion are met (i.e., no land disposal from the point of generation to the time the wastes are recycled and proper documentation is kept), no RCRA regulations apply. However, generators of these wastes must be aware of the prohibition on speculative accumulation of wastes intended for recycling. A material is *not* accumulated speculatively if the person accumulating it can show that the material is potentially recyclable and has a feasible means of being recycled; and that, during the calendar year (commencing on January 1), the amount of material recycled or transferred to a different site for recycling equals at least 75 percent by weight or volume of the amount of that material accumulated at the beginning of the period. (See 40 CFR 261.1(c)(8).) Therefore, the burden of proof rests with the person accumulating materials for recycling. EPA believes that speculative accumulation will not be a problem for most generators of coke by-product residues due to the ongoing use/reuse of these materials in their processes.

Three commenters requested a clarification in the final rule that today's rule does not apply to closing or historic sites. The commenters are incorrect. Since inception of the RCRA program, hazardous waste listings apply to the material being disposed, not when it is disposed of. A listed coke by-product waste disposed in 1970 is still that same listed waste. (*Chem. Waste Management* v. *EPA*, 869 F.2d 1526 (D.C. Cir. 1989)) Hazardous waste listings thus apply retroactively to wastes disposed in units that ceased operation prior to the effective date of the listings. This does not mean that such wastes must be exhumed for proper treatment; they are subject to subtitle C controls only when they are actively managed. EPA has interpreted "active management" as physically disturbing accumulated wastes within a management unit or disposing of additional hazardous wastes in existing units containing previously disposed wastes (September 1, 1989; 54 FR 36597). Therefore, the listings promulgated today do apply to wastes disposed before the effective date of this rule, when such wastes are actively managed. For example, if an abandoned site is being remediated and wastes or contaminated media are being removed from the site, any wastes meeting the listing descriptions finalized today must be managed in accordance with all applicable requirements.

One commenter was concerned about environmental media contaminated with the wastes being listed today. The commenter believed that recycling of such media should be treated the same as the recycling of the listed wastes. EPA clarifies here that the recycling of materials extracted from media that are contaminated with the wastes being listed today will fall within the exclusion for recycling as long as the recycling practice meets the terms of the exclusion (*i.e.*, no land disposal). If extracted material from contaminated media can be safely and effectively recycled, EPA sees no reason to regulate such recycling more stringently than the recycling of the process wastes themselves. Recycling of the listed materials is acceptable as long as they are not land disposed again. Extraction of recyclable materials from contaminated media remains subject to all applicable requirements of RCRA and CERCLA. In addition, the residues from this process (*i.e.*, leftover media that is unrecyclable, or other treatment residues) not only will be hazardous waste but, once EPA prohibits these wastes from land disposal, would have to meet the treatment standard for these wastes before they could be land disposed.

Several commenters made reference to the similarity between the coke by-products recovery process and the recycling practice addressed in the AMC I decision, involving in-process recycled materials in the petroleum refining industry (*AMC* v. *EPA*, 824 F.2d, D.C. Cir. 1987). The commenters believe that the similarities between the two situations provide a sound basis for an exclusion for coke by-product residues, conditioned on no land disposal of materials.

EPA agrees that it is possible to craft a reasonable exclusion that allows these materials to be recycled so as not to become part of the waste management problem. EPA does not agree with the commenters' characterization of the AMC I decision, an opinion now substantially repudiated by the D.C. Circuit.

Upon promulgation of the exclusion, the recycling of coke by-product plant residues, by reinsertion to coke ovens, the tar recovery or refining process, or mixing with coal tar, was excluded from regulation, provided the condition of the exclusion at 40 CFR 261.4(a)(10) is met (*i.e.*, no land disposal up to point of recycling). Consequently, if the terms of the exclusion are satisfied, coke by-product plant residues shipped off-site for recycling need not be accompanied by a manifest because they are not solid wastes and, therefore, not hazardous wastes. Of course, management of coke by-product residues that involves land disposal carries the provision that those residues must be managed in

accordance with all applicable RCRA requirements. It is important to note that, although manifesting is not required for coke by-product wastes being shipped for recycling within the terms of the exclusion, generators of theses wastes remain subject to LDR notification requirements under § 268.7(a)(6). This provision requires generators of restricted wastes that have been excluded from the definition of solid or hazardous waste or otherwise exempted from Subtitle C regulation to place a one-time notice in the facility's operating record. The requirements of the LDR program as they relate to this rulemaking are discussed more fully in the section of this preamble entitled Interaction with Other Regulations.

Four commenters objected to EPA's reliance on the "used to produce a fuel" rationale in 40 CFR 261.2(c)(2) for classifying coke by-product residues as solid wastes. Two commenters stated that the recycling of coke by-product residues into coke ovens falls under 40 CFR 261.2(e)(1) and, therefore, an exclusion at § 261.4(a) is unnecessary because the residues are already excluded from the definition of solid waste since they are used as ingredients in an industrial process to make a product (coke). EPA's rationale in classifying coke by-product residues as solid wastes in the July 26, 1991 proposal is also the reasons why 40 CFR 261.2(e)(1) does not exclude coke by-product residues from classification as a solid waste. 40 CFR 261.2(e)(2) provides that materials burned for energy recovery, used to produce a fuel, or otherwise contained in fuels are solid wastes, even if the recycling involves use, reuse, or return to the original process, as described in § 261.2(e)(1). The fact that coke has been recognized in the iron and steel industry for a long time not only for its physical and chemical value but also for its heating value in driving the iron reduction process in the blast furnace causes the "fuel" classification for coke.

The regulations classify secondary materials burned for energy recovery, used to produce a fuel, or otherwise contained in a fuel, as solid wastes because EPA believes that Congress intended the Agency to read its authority over waste-derived fuels expansively. EPA believes its authority over recycling is broadest when the recycling practice resembles a classic waste management activity, in this case, incineration. However, in the case involving recycling of coke by-product residues, the process is unlike waste management since the residues are similar to the coke and coal tar products, are amenable to use in the same process, and have no significant effect on the chemical composition of the products.

One commenter requested that the exclusion be expanded to include the recycling of coal tar materials generated by electric utilities during the remediation of historic manufactured gas plant (MGP) sites, specifically, the burning of coal tar wastes as fuels in high efficiency boilers. EPA wishes to clarify that the process of coal gasification is distinct from the coking process, from both a technical and a regulatory standpoint. The wastes from abandoned coal gasification plants are, therefore, not a part of this listing. The process referred to by the commenter is outside the scope of the recycling exclusion promulgated on June 22, 1992. The commenter may petition the Agency under 40 CFR 260.20 for a regulatory determination concerning the recycling activities at remediated MGP sites under a separate rulemaking.

One commenter proposed expanded approaches for dealing with the recycling of coke oven wastes. First, they recommended that EPA exempt these wastes from regulation as a hazardous waste when they are used as part of a CERCLA cleanup or RCRA corrective action. Secondly, the commenter urged the Agency to adopt a generic recycling exemption (i.e., from regulation as a hazardous waste) for recycling of these wastes and MGP wastes by any type of process if a person submits a petition and EPA approves such petition. This petitioning process would be similar to the existing process for delisting petitions.

Regarding the first suggestion, at a CERCLA site, treatment of a waste does not need a RCRA permit as long as the work is being done on-site and as long as Applicable and Relevant and Appropriate Requirements (ARARs) are observed. In these cases, where the wastes are removed from a remediated site, the material extracted can still be recycled to a coke oven if it meets the description of a waste in today's rule and if a coke by-products facility is willing to accept it. (Subsequent land disposal of the material again would void the exclusion.) Further, the issue of a national policy regarding recycling at remedial sites outside the scope of this rulemaking, which deals only with listing determinations regarding coke by-product wastes (RCRA 3001(e)). The Agency has recently raised the issue of cleanups at RCRA or CERCLA sites in the Hazardous Waste Identification Rule proposed on May 20, 1992 (57 FR 21450—21522). The Agency will resolve issues related to recycling at these sites as it decides which option in the HWIR rule to promulgate, in response to public comments.

With regard to the second point, under the exclusion to the definition of solid waste in § 261.4(a)(10), the materials can be excluded if they are returned to an excluded process (e.g., coke oven). The materials in question must have enough coke by-products material to meet the requirements of 261.4(a)(10). Given the demonstrated ability of several recyclers to accomplish extracting, reprocessing, and recycling of these materials without land disposal, the Agency feels that the current regulatory structure is sufficient to encourage not only the recycling of coke by-products wastes at operational facilities but also the remediation of these materials where they have been found in sufficient quantities in the environment (*e.g.*, abandoned sites).

Finally, one commenter requested that a Regulatory Flexibility Analysis be conducted. The Regulatory Flexibility Act (5 U.S.C. 601 *et seq.*) requires that whenever an agency publishes a notice of rulemaking, it must prepare a Regulatory Flexibility Analysis (RFA) that describes the effect of the rule on small entities. An RFA is unnecessary, however, if the Agency's administrator certifies that the rule will not have a significant economic effect on a substantial number of small entities. The commenter contended that the proposed rule would have a significant economic impact on their business because it proposed to exclude only processes that occur subsequent to the company's recycling activities. The Agency reiterates that any processing of coke by-products that occurs prior to recycling is considered part of the recycling process and is, therefore, excluded from regulation, provided that the terms of the exclusion are met. As a result, small entities are not significantly affected and a Regulatory Flexibility Analysis is unnecessary.

Additional detail and responses to additional comments are available in the Background Document to today's rule.

IV. Interaction With Other Regulations

A. Land Disposal Restrictions

The 1984 amendments to RCRA (HSWA) mandate that the Agency promulgate land disposal prohibition determinations under a specific schedule for wastes identified and listed prior to enactment of HSWA (RCRA sections 3004 (d), (e), and (g)(4); 42 U.S.C. 6924 (d), (e), and (g)(4)). If the

Agency failed to promulgate land disposal restrictions by the dates specified in section 3004(g)(4), the wastes were absolutely prohibited from land disposal after May 8, 1990. The statute also requires the Agency to make a land disposal prohibition determination for any hazardous waste that is newly listed or identified after November 8, 1984, within six months of the date of promulgation of the listing or identification (RCRA 3004(g)(4)). However, the statute does not provide for automatic prohibition of the land disposal of such wastes if EPA fails to meet this deadline.

The Agency is in the process of completing treatability and capacity analyses for the wastes covered by today's rule. For this reason, the Agency will address land disposal restrictions for these wastes in the near future. It should be noted that because the statute does not provide for automatic restriction or prohibition of land disposal for newly listed and identified wastes until such restrictions are promulgated, land disposal of these wastes will not be restricted or prohibited until the Agency promulgates land disposal restrictions for these wastes. However, these wastes may exhibit one of the prohibited hazardous characteristics or be subject to other regulatory or statutory restrictions such as the prohibition on disposing liquids in landfills. Wastes that exhibit the Toxicity Characteristic are considered newly identified and are not covered by the LDR, unless they also exhibit the EP Toxicity Characteristic (see the Third Third LDR Rule, June 1, 1990; 55 FR 22520). EPA expects to propose prohibitions and treatment standards for TC wastes, as well as for the wastes newly listed today, during the summer of 1992.

EPA wishes to point out that generators of restricted hazardous wastes that have been excluded or exempted from regulation are subject to a notification requirement under the Land Disposal Restrictions program in accordance with § 268.7(a)(6) (see 55 FR 3878; January 31, 1991). This subparagraph requires generators of restricted wastes that are excluded from the definition of solid or hazardous waste or otherwise exempt from Subtitle C regulation to place a one-time notice in the facility's files. This notice must contain information on the generation, subsequent exclusion or exemption from RCRA regulation, and the disposition of the waste. This recordkeeping requirement is similar to the provision in § 261.2(f) requiring documentation of claims that a material is not a solid waste. The information on the disposition of the waste must indicate that the waste is not land disposed or placed in any type of land-based unit and, therefore, remains eligible for the exclusion. The existing listed wastes covered by the exclusion at § 261.4(a)(10) (i.e., K060 and K087) are already prohibited from land disposal and have BDAT treatment standards associated with them and are therefore already subject to this recordkeeping requirement. The wastes being listed today will be addressed by the Agency in a future LDR rulemaking and will therefore become subject to the notification requirement once the prohibition for these wastes takes effect. As discussed above, these prohibitions and treatment standards for the TC wastes are expected to be proposed this summer.

V. State Authority

A. Applicability of Final Rule in Authorized States

Under Section 3006 of RCRA, EPA may authorize qualified States to administer and enforce RCRA programs within the State. (See 40 CFR part 271 for the standards and requirements for authorization.) Following authorization, EPA retains enforcement authority under sections 3008, 7003, and 3013 of RCRA, although authorized States have primary enforcement responsibility.

Prior to the Hazardous and Solid Waste Amendments of 1984 (HSWA), a State with final RCRA authorization administered its authorized hazardous waste program entirely in lieu of EPA. The Federal requirements no longer applied in the authorized State, and EPA could not issue permits for any facilities in the State which the State was authorized to permit. When new, more stringent Federal requirements were promulgated or enacted, the State was obliged to enact equivalent authority within specified time frames. New Federal requirements did not take effect in an authorized State until the State adopted the requirements as State law.

In contrast, under section 3006(g) of RCRA (42 U.S.C. 6926(g)), new requirements and prohibitions imposed by the HSWA take effect in authorized States at the same time that they take effect in nonauthorized States. EPA is directed to implement these requirements and prohibitions in authorized States, including the issuance of permits, until the State modifies its program to reflect the Federal standards, and applies for and is granted authorization. While States must still adopt HSWA-related provisions as State law to retain final authorization, HSWA applies in authorized States in the interim.

Today's rule is promulgated pursuant to section 3001(e)(2) of RCRA, a provision added by HSWA. Therefore, the Agency is adding these requirements to Table 1 in 40 CFR 271.1(j), which identifies the Federal program requirements that are promulgated pursuant to HSWA and that take effect in all States, regardless of their authorization status. States may apply for either interim or final authorization for the HSWA provisions identified in 40 CFR 271.1(j) Table 1, as discussed in the following section of the preamble.

B. Effect on State Authorization

As noted previously, today's rule is promulgated pursuant to provisions added by HSWA. The addition of K141 through K145 and K147 and K148 to the list of hazardous wastes from specific sources is promulgated pursuant to section 3001(e)(2) of RCRA, a provision added by HSWA.

As noted above, EPA will implement the HSWA portions of today's rule in authorized States until they modify their programs to adopt these rules and such modifications are approved by EPA. Because this rule is promulgated pursuant to HSWA, a State submitting a program modification may apply to receive either interim or final RCRA authorization under section 3006 (g)(2) or 3006(b), respectively, on the basis that State regulations are substantially equivalent or fully equivalent to EPA's regulations. The procedures and schedules for State program modifications for either interim or final authorization are described in 40 CFR 271.21. It should be noted that all HSWA interim authorizations will expire on January 1, 1993 (see 40 CFR 271.24(c)).

It should also be noted that 40 CFR 271.21(e) requires that States having final RCRA authorization must modify their programs to reflect Federal program changes and must subsequently submit the modifications to EPA for approval. The deadline by which States must modify their programs to reflect this rule is July 1, 1994 (or July 1, 1995, if statutory changes are required). Once EPA approves the modification, the State requirements become RCRA subtitle C requirements.

States with authorized RCRA programs may already have regulations similar to those promulgated in today's rule. Such State regulations have not been assessed against the Federal regulations being finalized today to determine whether they meet the tests for authorization. Thus, a State is not authorized to implement its regulations

as RCRA requirements until the State program modification is submitted to EPA and approved. Of course, States with existing regulations may continue to administer and enforce those regulations as a matter of State law. In addition, in implementing the Federal program, EPA will work with the States under cooperative agreements to minimize duplication of efforts; in many cases, EPA will be able to defer to the States in their efforts to implement their programs, rather than take separate actions under Federal authority.

States that submit their official applications for final authorization less than 12 months after the effective date of EPA's regulations are not required to include regulations equivalent to the EPA regulations in their application. However, States must modify their programs by the deadlines set forth in 40 CFR 271.21(e)(2). States that submit official applications for final authorization 12 months after the effective date of these standards must include standards equivalent to these standards in their application. The requirements States must meet when submitting final authorization applications are set forth in 40 CFR 271.3.

VI. CERCLA Designation and Reportable Quantities

All hazardous wastes listed in 40 CFR 261.31 through 261.33, as well as any solid waste that exhibits one or more of the hazardous waste characteristics, also are hazardous substances under section 101(14) of the Comprehensive Environmental Response, Compensation and Liability Act (CERCLA) of 1980, as amended. Therefore, the seven wastes being listed today are CERCLA hazardous substances. Hazardous substances are listed in Table 302.4 at 40 CFR 302.4 along with their respective reportable quantities (RQs); thus, EPA is today adding entries for K141, K142, K143, K144, K145, K147, and K148 to Table 302.4.

Under CERCLA 103(a), the person in charge of a vessel or facility from which a hazardous substance has been released in a quantity that equals or exceeds its RQ must immediately notify the National Response Center of the release as soon as that person has knowledge of the release. In addition to this reporting requirement under CERCLA, section 304 of the Emergency Planning and Community Right-to-Know Act (EPCRA) requires owners or operators of certain facilities to report the release of a hazardous substance to State and local authorities. EPCRA section 304 notification must be given to the community emergency coordinator of the local emergency planning committee for each area likely to be affected by the release, and to the State emergency planning commission of any State likely to be affected by the release.

Under section 102(b) of CERCLA, all hazardous wastes are assigned a statutory RQ of one pound unless and until adjusted by regulation. The Agency's methodology for adjusting RQs of individual hazardous substances begins with an evaluation of the intrinsic physical, chemical, and toxicological properties of each hazardous substance. The intrinsic properties examined, called "primary criteria," are aquatic toxicity, mammalian toxicity (oral, dermal, and inhalation), ignitability, reactivity, chronic toxicity, and potential carcinogenicity. Generally, for each intrinsic property, the Agency ranks hazardous substances on a scale, associating a specific range of values on each scale with an RQ of 1, 10, 100, 1,000, or 5,000 pounds. The data for each hazardous substance are evaluated using various primary criteria; each hazardous substance may receive several tentative RQ values based on its particular intrinsic properties. The lowest of the tentative RQs becomes the "primary criteria RQ" for that substance.

After the primary criteria RQs are assigned, substances are further evaluated for their susceptibility to certain degradative processes, which are used as secondary adjustment criteria. These natural degradative processes are biodegradation, hydrolysis, and photolysis (BHP). If a hazardous substance, when released into the environment, degrades relatively rapidly to a less hazardous form by one or more of the BHP processes, its RQ, as determined by the primary RQ adjustment criteria, is generally raised one level. This adjustment is made because the relative potential for harm to public health or welfare or the environment posed by the release of such a substance is reduced by these degradative processes. Conversely, if a hazardous substance degrades to a more hazardous form after its release, the original substance is assigned an RQ equal to the RQ for the reaction product. The downward adjustment is appropriate because the hazard posed by the release of the original substance is increased if it degrades to a more hazardous form.

The methodology summarized above is applied to adjust the RQs of individual hazardous substances. An additional process applies to RCRA waste streams that contain individual hazardous substances as constituents. As the Agency has stated (54 FR 33440, August 14, 1989), to assign an RQ to a waste stream, the Agency determines the RQ for each waste stream constituent and then assigns the lowest of these constituent RQs to the waste stream itself.

Waste streams K141, K142, K143, K144, K145, K147, and K148 each contain at least one constituent with an RQ of one pound (the lowest RQ). In order to coordinate RCRA and CERCLA rulemakings, the Agency included regulatory RQs of one pound for each waste stream in the July 26, 1991 proposed rule (56 FR 35758). EPA received no comments on these proposed RQ adjustments. The Agency is, therefore, promulgating these RQ adjustments by including final RQs of one pound for waste streams K141, K142, K143, K144, K145, K147, and K148 in Table 302.4 (40 CFR 302.4).

VII. Cost and Economic Analysis

Executive Order No. 12291 requires that a regulatory agency determine whether a new regulation will be "major" and, if so, that a Regulatory Impact Analysis (RIA) be conducted. An RIA is a quantification of the potential benefits, costs, and economic impacts of the rule. A "major" rule is defined as a regulation likely to: (1) Result in an annual effect on the economy of $100 million or more; (2) increase costs or prices for consumers, individuals, industries, Federal, State, and local government agencies, or geographic regions; or (3) significant adverse effects on competition, employment, investment, productivity, innovation, or on the ability of United States-based enterprises to compete with foreign-based enterprises in domestic or export markets.

The Agency estimated the costs of today's final rule to determine if it is a major regulation as defined by Executive Order 12291. Today's final rule is not a major rule, having costs below $100 million annually. Additionally, the Agency's cost analysis concluded that these costs would not result in significant price increases or significant adverse effects on competition, trade, employment, or investment. Because impacts of this rule do not meet the criteria set forth by Executive Order 12291, the Agency has determined that today's rule is not a major one. An effect and economic impact analysis has been performed, estimating the costs and economic impact incurred as a result of today's rule. This section of the preamble discusses the results of this analysis.

The full Cost and Economic Impact Analysis document is available in the public docket.

A. Cost Analysis

The Agency developed costs for today's final rule on a facility-specific basis for the coking industry (30 active coke facilities) and the tar refining industry (eight active tar refining facilities). Baseline management practice costs and post-regulatory management practice costs were developed at each facility; the incremental compliance cost of today's rule is determined as the post-regulatory cost minus the baseline cost.

The baseline management options include practices such as recycling to the coke oven or tar decanter, on-site landfilling, off-site reclamation, and burning in a boiler or blast furnace. The compliance management options include recycling to the coke oven or cement kiln for all waste streams, no generation-circulation for tar storage tank residues for coking merchant plants and tar refining plants, and off-site reclamation for K143 wash oil purifier residue and decanter muck.

Tables 7 and 8 summarize the annualized after-tax costs by waste code for baseline, least costly compliance option (recycle to the oven and no generation-circulation for tar storage tank residues from tar refining) and most costly compliance option (cement kiln). Tables 9 and 10 summarize the annualized after-tax costs by facility, including the part 262 costs. The total incremental annual after-tax compliance cost of today's rule is estimated to be between $380,000 (not including a $200,000 estimated savings for the tar refining industry) and $6.6 million. The Economic Impact Screening Analysis, available in the docket, provides a complete description of the cost analysis.

TABLE 7—SUMMARY OF COKING INDUSTRY IMPACTS FOLLOWING COMPLIANCE FOR HAZARDOUS WASTE LISTINGS K141–K145

[After tax private cost]

Waste stream product	Coke production (tons/year)*	Residual (tons/year)	Baseline		Least costly compliance option			Most costly compliance option		
			Current management practice	Annualized cost ($/yr)	Compliance management practice	Annualized cost ($/yr)	Incremental annualized cost ($/yr)	Compliance management practice	Annualized cost ($/yr)	Incremental annualized cost ($/yr)
K141	24,924,631	3,102	Baseline	54,980	Recycle to oven	234,732	149,752	Cement Kiln	952,364	897,334
K142	24,637,897	10,023	Baseline	497,012	Recycle to oven	661,443	175,450	Cement Kiln	3,147,559	2,650,547
K143	22,860,399									
(a) Scrubber residue.		452	Baseline	11,873	Recycle to oven	29,817	18,075	Cement Kiln	150,671	238,025
(b) Wash oil residue.		3,617	Baseline	30,862	Recycle to oven	236,702	207,857	Cement Kiln	1,016,390	985,528
K144	16,297,707	870	Baseline	23,480	Recycle to oven	37,411	33,930	Cement Kiln	343,023	319,542
K145	15,251,593	453	Baseline	14,994	Recycle to oven	29,919	15,207	Cement Kiln	220,580	205,587
Total				633,201		1,220,024	600,279		5,830,584	5,197,393

* 1984 production data from 1985 RCRA 3007 questionnaire.

TABLE 8.—SUMMARY OF TAR INDUSTRY IMPACTS FOLLOWING COMPLIANCE FOR HAZARDOUS WASTE LISTINGS K147–K148

[After Tax Private Cost]

Product	Tar processed gal/year)*	Residual (tons/year)	Baseline		Least costly compliance option			Most costly compliance option		
			Current management practice	Annualized cost ($/yr)	Compliance management practice	Annualized cost ($/yr)	Incremental annualized cost ($/yr)	Compliance management practice	Annualized cost ($/yr)	Incremental annualized cost ($/yr)
K147	178,368,000	2,516	Baseline	153,450	No generation-circ.	2,088	0	Cement Kiln	789,891	636,440
K148	175,928,000	242	Baseline	12,237	Recycle to oven	16,342	4,105	Cement Kiln	105,877	93,640
Total				165,687		18,430	4,105		895,768	730,080

* 1984 production data from RCRA 3007 questionnaire.

B. Economic Impact Analysis

The Agency assessed the economic impacts incurred due to today's final rule for the coke industry and the tar refining industry. The economic impacts for both industries were estimated by calculating the ratio derived from dividing the annual incremental after-tax compliance costs by the value of production on a facility-specific basis. A ratio greater than one percent of sales (value of production) indicates potentially significant adverse effects.

1. Coking Industry

EPA estimated costs for the 30 active coke facilities for which data was available. However, the economic impact analysis was conducted for all 32 coking facilities. Economic impacts for the two facilities for which the Agency did not possess data were estimated using the average production and incremental compliance costs for the 30 active coke facilities. Table 9 summarizes the impacts by facility and industry total for coking. Except for those facilities that claimed confidentiality (CBI facilities), Table 9 shows for each facility in the industry

the estimated annual value of production, least costly and most costly incremental annualized compliance costs, and costs of compliance as a percent of value of production.

Assuming facilities adopt the least costly management options, costs of compliance are insignificant for all facilities. For the least costly management options, the industry aggregate costs of compliance to value of production ratios is estimated at 0.009 percent (compared to the proposed rule industry aggregate of −0.001 percent). There are no adverse economic impacts associated with the least costly option. The increase in the industry aggregate cost to value of production ratio from the proposed rule is attributable to a contract recycler recycling the waste at the coking plant at $100/ton. The price of $100/ton includes capital expenditures for storage and processing equipment, removal of waste, and processing. The proposed rule costs included only facility labor for removal of waste, except for K143 which also included storage tanks.

Assuming that facilities adopt the most costly compliance option, cement kiln in all cases, there are no adverse economic impacts. For the most costly management option, the industry aggregate costs of compliance to value of production ratios is estimated at 0.13 percent (compared to the proposed rule industry aggregate of 0.36 percent).

TABLE 9.—SUMMARY OF COKING FACILITY AND INDUSTRY IMPACTS FOLLOWING COMPLIANCE WITH PROPOSED HAZARDOUS WASTE LISTINGS (K141–K145)

DPRA facility ID No.	Estimated value of production	Least costly options		Most costly options	
		Incremental annualized compliance costs	Costs of compliance as a percent of value of production	Incremental annualized compliance costs	Costs of compliance as a percent of value of production
	($/yr)	($/yr)	(%)	($/yr)	(%)
32	35,452,470	(1,715)	−0.005	36,226	0.10
31	42,237,649	2,180	0.005	32,404	0.08
10	63,842,000	2,932	0.005	81,212	0.13
26	80,094,745	10,557	0.013	122,092	0.15
24	73,820,932	15,111	0.020	125,814	0.17
22	78,427,293	2,358	0.003	43,999	0.06
8	94,202,216	5,788	0.006	125,539	0.13
15	85,064,165	10,266	0.012	122,056	0.14
23	83,800,535	8,716	0.010	109,003	0.13
1	132,008,745	12,316	0.010	142,520	0.11
9	155,552,951	21,612	0.014	225,317	0.14
11	107,763,220	3,503	0.003	28,693	0.03
20	159,286,321	11,316	0.007	127,295	0.08
28	139,573,882	10,645	0.008	122,191	0.09
30	128,027,092	8,923	0.007	185,977	0.15
4	209,541,571	18,395	0.009	178,545	0.09
2	187,411,097	19,117	0.010	213,670	0.11
25	168,991,246	20,841	0.012	232,759	0.14
16	336,478,730	70,182	0.021	752,809	0.22
3	275,262,890	27,028	0.010	291,834	0.11
27	262,956,386	16,782	0.006	353,206	0.13
7	464,034,330	16,457	0.004	385,011	0.08
50	[1] 138,629,820	21,625	0.016	235,075	0.17
52	[1] 172,462,500	31,264	0.018	348,351	0.20
CBI	[2] 474,025,289	(8,794)	−0.002	640,133	0.14
Other [3]	276,596,538	23,894	0.009	350,782	0.13
Total industry	4,425,544,613	382,299	0.009	5,612,515	0.13

[1] The estimated value of production for this firm is based strictly on their production of coke. No information is available on the rest of their production line. Thus, the value of production is likely underestimated and the impacts on these facilities overestimated.

[2] Information for CBI facilities is aggregated to protect the confidentiality of each individual facility.

[3] There are two active coking facilities for which no production or waste generation data are available. The average values for all other coking facilities are used as proxies for these two facilities, so that industry impacts are not underestimated. Thus, the average value of production is assumed for each of these facilities, as is the average incremental annualized compliance costs for both the least costly options and the most costly options.

Source: DPRA Incorporated.

2. Tar Refining Industry

There are 14 active tar refining facilities. Of these 14 facilities, three facilities do not generate K147 and K148. In addition, for three of the facilities no production or waste generation data are available. Incremental compliance costs were estimated for the eight active tar refining facilities for which the Agency has data. However, the Agency conducted an economic impact analysis for 11 tar refining plants (the three facilities that do not generate K147 and K148 were omitted). Economic impact for the three facilities for which there are no data were estimated using the average production and incremental compliance costs for the eight active tar refining facilities. Table 10 summarizes the impacts by industry total for tar refining. Nearly all the tar refiners requested confidentiality on the data they submitted on the RCRA 3007 questionnaire; therefore, Table 10 presents only aggregated information.

Assuming facilities adopt the least costly management options, costs of compliance are insignificant for all facilities. For the least costly management options, the industry aggregate costs of compliance to value of production ratios is estimated to be too small to be measurable as a cost or savings (compared to the proposed rule industry aggregate of −0.04 percent). There are no adverse economic impacts associated with the least costly option.

Assuming the facilities adopt the most costly compliance option, cement kiln in all cases, there are no adverse economic impacts. For the most costly management option, the industry aggregate costs of compliance to value

of production ratios is estimated at 0.26 percent (compared to the proposed rule industry aggregate of 0.97 percent). Under the proposed rule, five tar refining facilities were adversely affected, with costs to sales ratios exceeding one percent.

TABLE 10.— SUMMARY OF TAR REFINING INDUSTRY EFFECTS FOLLOWING COMPLIANCE WITH PROPOSED HAZARDOUS WASTE LISTINGS (K 147 AND K 148)

Facility name [1]	Estimated value of production	Least costly option [2]		Most costly option [3]	
		Incremental annualized compliance costs ($/yr)	Costs of compliance as a percent of value of production (%)	Incremental annualized compliance costs ($/yr)	Costs of compliance as a percent of value of production (%)
Aggregated facilities	$384,801,384	[4]0	0	1,011,248	0.26

[1] Because most tar refining facilities requested confidentiality, individual facility names are not shown. Rather, data from all facilities are presented in aggregate figures.
[2] Least costly option: No generation/circulation for tar storage tank residues (K147). Recycle to oven for still bottoms (K148).
[3] Most costly option: Cement kiln for both K147 and K148.
[4] Incremental annualized compliance costs were determined to be insignificant, either as a cost or a savings.
Source: Prepared for the U.S. EPA by DPRA Incoroorated.

VIII. Regulatory Flexibility Analysis

Pursuant to the Regulatory Flexibility Act of 1980 (RFA), 5 U.S.C. 601 *et seq.*, whenever an agency is required to publish a notice of rulemaking for any proposed or final rule, it must prepare and make available for public comment a regulatory flexibility analysis that describes the effect of the rule on small entities (i.e., small businesses, small organizations, and small governmental jurisdictions). This analysis is unnecessary, however, if the agency's administrator certifies that the rule will not have a significant economic effect on a substantial number of small entities.

EPA has examined the rule's potential effects on small entities as required by the Regulatory Flexibility Act. I certify that today's proposed rule will not have a significant economic effect on a substantial number of small entities.

IX. Paperwork Reduction Act

This rule does not contain any new information collection requirements under RCRA that are subject to OMB review under the Paperwork Reduction Act of 1990, 44 U.S.C. 3501 *et seq.* Release reporting required as a result of proposing the listed wastes as hazardous substances under CERCLA and adjusting the reportable quantities (RQs) has been approved under the provisions of the Paperwork Reduction Act, 44 U.S.C. 3501 *et seq.*, and has been assigned OMB control number 2050–0046.

X. Compliance and Implementation

A. Section 3010 Notification

Generally, when new hazardous wastes are listed, all persons who generate, transport, treat, store, or dispose of the newly listed waste(s) are required to notify either EPA, or a State authorized by EPA to implement the hazardous waste program, of their activities pursuant to Section 3010 of RCRA. However, under the Solid Waste Disposal Amendments of 1980 (Pub. L. 96–482), EPA was given the option of waiving the notification requirements under Section 3010 of RCRA following revision of the Section 3001 regulations, at the discretion of the Administrator. EPA is proposed to waive this notification requirement for persons who handle wastes that are covered by today's rule and have already notified EPA that they manage other hazardous wastes and have received an EPA identification number. EPA is waiving the notification requirement because of the likelihood that persons managing today's newly listed wastes already are managing one or more hazardous wastes that generally are associated with the generation of K141–K145, K147, and K148 and have, therefore, previously notified EPA and received an EPA identification number. In the event that any person who generates, transports, treats, stores, or disposes these wastes has not previously notified and received an identification number, that person must obtain an identification number pursuant to 40 CFR 262.12 before that person can generate, transport, treat, store, or dispose of these wastes.

B. Compliance Dates for Facilities

Today's hazardous wastes listings are promulgated pursuant to HSWA. HSWA requirements are applicable in authorized States at the same time as in unauthorized States. Therefore, EPA will regulate the wastes listed today until States are authorized to regulate these wastes. The Agency will apply these Federal regulations to these wastes and to their management in both authorized and unauthorized States.

Newly regulated facilities (i.e., facilities at which the only hazardous wastes that are managed are today's newly listed wastes in units subject to permit requirements) must qualify for interim status within six months of publication of the rule in order to continue managing these wastes in such units. To retain interim status, a newly-regulated land disposal facility must, within eighteen months after publication of the rule, submit a part B permit application and certify that the facility is in compliance with all applicable ground-water monitoring and financial responsibility requirements (see RCRA section 3005(e)(3)).

Interim status facilities that manage the wastes listed today must file an amended part A permit application within six months of publication of today's rule (the effective date of the rule) if they are to continue managing these wastes in units that require a permit. The facilities must file the necessary amendments by the effective date of the rule, or they will not obtain interim status with respect to these wastes.

Currently permitted facilities that manage today's newly listed wastes must request permit modifications if they are to continue managing these wastes in units that require a permit. Since EPA will initially be responsible for processing these permit modifications, the Federal procedures for permit modifications to add newly listed or identified wastes will be followed. (See § 270.42(g).) This provision generally requires that a permitted facility that is "in existence"

for the newly listed or identified waste on the effective date of the waste listing must submit a Class 1 modification by that date. Essentially, this modification notifies the Agency and the public that the facility is handling the waste and identifies the units involved. By submitting this notice, the facility is temporarily allowed to continue management of the newly listed wastes until the Agency can make a final modification to the permit. Next, within 180 days of the effective date the permittees must submit a more detailed permit modification request (i.e., a Class 2 or 3 modification). This information will be used by the Agency to develop a final permit modification.

List of Subjects

40 CFR Part 261

Hazardous waste, Recycling, Reporting and recordkeeping requirements.

40 CFR Part 271

Administrative practice and procedure, Confidential business information, Hazardous materials transportation, Hazardous waste, Indians-lands, Intergovernmental relations, Penalties, Reporting and recordkeeping requirements, Water pollution control, Water supply.

40 CFR Part 302

Air pollution control, Chemicals, Hazardous substances, Hazardous materials, Hazardous wastes, Intergovernmental relations, Natural resources, Reporting and recordkeeping requirements, Superfund, Water pollution control, Water supply.

Dated: July 31, 1992.

William K. Reilly,

Administrator.

For the reasons set out in the preamble, chapter I of title 40 of the Code of Federal Regulations is amended as follows:

PART 261—IDENTIFICATION AND LISTING OF HAZARDOUS WASTE

1. The authority citation for part 261 continues to read as follows:

Authority: 42 U.S.C. 6905, 6912(a), 6921, 6922, and 6938.

2. In § 261.4, paragraph (a)(10) is revised to read as follows:

§ 261.4 Exclusions.

(a) * * *

(10) EPA Hazardous Waste Nos. K060, K087, K141, K142, K143, K144, K145, K147, and K148, and any wastes from the coke by-products processes that are hazardous only because they exhibit the Toxicity Characteristic (TC) specified in section 261.24 of this part when, subsequent to generation, these materials are recycled to coke ovens, to the tar recovery process as a feedstock to produce coal tar, or mixed with coal tar prior to the tar's sale or refining. This exclusion is conditioned on there being no land disposal of the wastes from the point they are generated to the point they are recycled to coke ovens or tar recovery or refining processes, or mixed with coal tar.

* * * * *

3. Section 261.32 is amended by adding the following hazardous waste listings in alphanumeric order to the subgroup Coking to read as follows:

§ 261.32 Hazardous wastes from specific sources.

* * * * *

Industry and EPA hazardous waste No.	Hazardous waste	hazard code
	* * * * * * *	
Coking:		
	* * * * * * *	
K141	Process residues from the recovery of coal tar, including, but not limited to, collecting sump residues from the production of coke from coal or the recovery of coke by-products produced from coal. This listing does not include K087 (decanter tank tar sludges from coking operations).	(T)
K142	Tar storage tank residues from the production of coke from coal or from the recovery of coke by-products produced from coal	(T)
K143	Process residues from the recovery of light oil, including, but not limited to, those generated in stills, decanters, and wash oil recovery units from the recovery of coke by-products produced from coal.	(T)
K144	Wastewater sump residues from light oil refining, including, but not limited to, intercepting or contamination sump sludges from the recovery of coke by-products produced from coal.	(T)
K145	Residues from naphthalene collection and recovery operations from the recovery of coke by-products produced from coal	(T)
K147	Tar storage tank residues from coal tar refining	(T)
K148	Residues from coal tar distillation, including but not limited to, still bottoms	(T)

4. In part 261, Appendix VII is amended to add the following waste streams in alphanumeric order to read as follows:

APPENDIX VII—BASIS FOR LISTING HAZARDOUS WASTE

EPA hazardous waste No.	Hazardous constituents for which listed
	* * * * * * *
K141	Benzene, benz(a)anthracene, benzo(a)pyrene, benzo(b)fluoranthene, benzo(k)fluoranthene, dibenz(a,h)anthracene, indeno(1,2,3-cd)pyrene.
K142	Benzene, benz(a)anthracene, benzo(a)pyrene, benzo(b)fluoranthene, benzo(k)fluoranthene, dibenz(a,h)anthracene, indeno(1,2,3-cd)pyrene.
K143	Benzene, benz(a)anthracene, benzo(b)fluoranthene, benzo(k)fluoranthene.
K144	Benzene, benz(a)anthracene, benzo(a)pyrene, benzo(b)fluoranthene, benzo(k)fluoranthene, dibenz(a,h)anthracene.
K145	Benzene, benz(a)anthracene, benzo(a)pyrene, dibenz(a,h)anthrancene, naphthalene.
K147	Benzene, benz(a)anthracene, benzo(a)pyrene, benzo(b)fluoranthene, benzo(k)fluoranthene, dibenz(a,h)anthracene, indeno(1,2,3-cd)pyrene.
K148	Benz(a)anthracene, benzo(a)pyrene, benzo(b)fluoranthene, benzo(k)fluoranthene, dibenz(a,h)anthracene, indeno(1,2,3-cd)pyrene.

* * * * * * *

PART 271—REQUIREMENTS FOR AUTHORIZATION OF STATE HAZARDOUS WASTE PROGRAMS

1. The authority citation for Part 271 continues to read as follows:

Authority: 42 U.S.C. 6905, 6912(a), and 6926.

2. Section 271.1(j) is amended by adding the following entry to Table 1 in chronological order by date of publication:

§ 271.1 Purpose and scope.

* * * * *

(j) * * *

TABLE 1.—REGULATIONS IMPLEMENTING THE HAZARDOUS AND SOLID WASTE AMENDMENTS OF 1984

Promulgation date	Title of regulation	Federal Register reference	Effective date
*	*	*	*
August 18, 1992.	The listing of wastes from the production, recovery, and refining of coke by-products produced from coal	[insert FR page numbers]	February 18, 1993.

* * * * *

PART 302—DESIGNATION, REPORTABLE QUANTITIES, AND NOTIFICATION

1. The authority citation for part 302 continues to read as follows:

Authority: 42 U.S.C. 9602, 9603, and 9604; 33 U.S.C. 1321 and 1361.

2. Section 302.4 is amended by adding the waste streams K141 through K145, K147, and K148 to Table 302.4 in alphanumeric order. The appropriate footnotes to Table 302.4 are republished without change.

TABLE 302.4.—LIST OF HAZARDOUS SUBSTANCES AND REPORTABLE QUANTITIES

Hazardous substances	CASRN	Regulatory synonyms	Statutory			Final RQ	
			RQ	Code†	RCRA waste number	Category	Pounds (Kg)
*	*	*	*	*	*	*	*
K141			1*	4	K141	X	1 (0.454)
Process related from the recovery of coal tar, including, but not limited to, tar collecting sump residues from the production of coke by-products produced from coal. This listing does not include K087 (decanter tank tar sludge from coking operations.)							
K142			1*	4	K142	X	1 (0.454)
Tar storage tank residues from the production of coke from coal or from the recovery of coke by-products produced from coal.							
K143			1*	4	K143	X	1 (0.454)
Process residues from the recovery of light oil, including, but not limited to, those generated in stills, decanters, and wash oil recovery units from the recovery of coke by-products produced from coal.							
K144			1*	4	K144	X	1 (0.454)
Wastewater sump residues from light oil refining, including, but not limited to, intercepting or contamination sump sludges from the recovery of coke by-products produced from coal.							
K145			1*	4	K145	X	1 (0.454)
Residues from naphthalene collection and recovery operations from the recovery of coke by-products produced from coal.							
K147			1*	4	K147	X	1 (0.454)
Tar storage tank residues from coal tar refining.							
K148			1*	4	K148	X	1 (0.454)
Residues from coal tar distillation, including, but not limited to, still bottoms.							

†—indicates the statutory source as defined by 1, 2, 3, 4, or 5 below.
4—indicates that the statutory source for designation of this hazardous substance under CERCLA is RCRA Section 3001.
1*—indicates that the 1-pound RQ is a CERCLA statutory RQ.

* * * * *

[FR Doc. 92-19347 Filed 8-17-92, 8:45 am]

BILLING CODE 6560-50-M

federal register

Tuesday
August 18, 1992

Part IV

Department of Transportation

Federal Aviation Administration

14 CFR Part 93

High Density Traffic Airports; Slot Allocation and Transfer Methods; Rule

DEPARTMENT OF TRANSPORTATION

Federal Aviation Administration

14 CFR Part 93

[Docket No. 25758; Amdt. No. 93-65]

RIN 2120-AD93

High Density Traffic Airports; Slot Allocation and Transfer Methods

AGENCY: Federal Aviation Administration (FAA), Department of Transportation (DOT).

ACTION: Final rule.

SUMMARY: This action amends the Federal Aviation Regulations governing the allocation and transfer of air carrier and commuter operator slots (*i.e.*, instrument flight rules (IFR) takeoff and landing reservations) at Kennedy International Airport, LaGuardia Airport, O'Hare International Airport, and Washington National Airport. This amendment adds a definition of "limited incumbent carrier" to refer to air carriers and commuter operators holding fewer than 12 slots at a high density airport; provides for allocation of slots by lottery to certain new entrant and limited incumbent carriers; restricts the transfer of newly acquired lottery slots and provides for the recall of those slots upon the sale or merger of the limited incumbent slot holder; amends the minimum slot use requirements; amends the slot use reporting requirements; and removes an obsolete penalty provision. This amendment is designed to promote the availability of slots to new entrant and limited incumbent carriers at the high density airports, and thereby enhance competition.

EFFECTIVE DATE: November 1, 1992.

FOR FURTHER INFORMATION CONTACT: Patricia R. Lane, Office of the Chief Counsel, AGC-230, Federal Aviation Administration, 800 Independence Avenue, SW., Washington, DC 20591. Telephone: (202) 267-3491.

SUPPLEMENTARY INFORMATION:

Background

The High Density Traffic Airport Rule, 14 CFR part 93, Subpart K, limits the number of IFR operations during certain hours or half hours at Kennedy International, LaGuardia, O'Hare International, and Washington National Airports. Comprehensive rules for the Allocation and transfer of high density airport slots were adopted in 1985 (14 CFR part 93, subpart S; 50 FR 52195, December 20, 1985). A "slot" is defined as the authority to conduct one allocated IFR landing or takeoff operation during a specific period at one of the high density airports. These periods are either 30 or 60 minutes, depending on the airport.

On December 16, 1988, the Department of Transportation issued Notice of Proposed Rulemaking No. 88-18 (53 FR 51628, December 22, 1988). In that notice, the Department denied the petition of America West Airlines to withdraw slots from incumbent carriers at National and LaGuardia Airports and to reallocate those slots to new entrant and smaller incumbent carriers. The Department sought comments on the effects of the slot restrictions on competition and market entry, as required by § 149 of Public Law 100-457.

Notice No. 88-18 also proposed two specific amendments to the current slot rules. The first proposal was to forego withdrawal of slots, for reasons other than non-use, from a carrier with eight or fewer slots if the carrier itself used the slots and did not lease them to other carriers. The second proposal was to increase slot use requirements to 80% or 90% for carriers holding a substantial number of slots.

On August 22, 1989, the Department published Amendment No. 93-57, protecting a carrier holding and operating fewer than eight slots from withdrawal of those slots, and amending the definition of "summer" and "winter" season to conform to current daylight savings times dates under Federal law (54 FR 34904; corrected 54 FR 37303, September 8, 1989). Amendment No. 93-57 also redefined commuter operations as those using turboprop or reciprocating aircraft having fewer than 75 passenger seats. The Department subsequently amended § 93.123(c) to include in the definition of "commuter aircraft" turbojets with a maximum seating capacity of less than 56 passengers (56 FR 41200, August 19, 1991).

In 1990, Congress passed the Omnibus Reconciliation Act of 1990, Public Law 101-508 (104 Stat. 1388). Title IX of the Act, referred to as the "Aviation Safety and Capacity Expansion Act of 1990," (104 Stat. 1388-371) contains in section 9126(a) a provision that the Secretary of Transportation shall, by July 1, 1991, initiate a rulemaking proceeding to consider more efficient methods of allocating existing capacity at high density traffic airports in order to provide improved opportunities for operations by new entrant air carriers. The section also defines the term new entrant air carrier, as used with respect to a high density traffic airport, as an air carrier having less than 12 operating rights at such airport.

The Department determined that the most productive and efficient means of initiating the rulemaking required by Public Law 101-508 was to incorporate it in Docket No. 25758. Continuing and supplementing the rulemaking initiated in December 1988, the agency issued Supplemental Notice of Proposed Rulemaking No. 88-18A (SNPRM) on September 9, 1991 (56 FR 46674, September 13, 1991), modifying the proposal.

The SNPRM proposed to (1) add a new definition for limited incumbent, to mean an air carrier or commuter operator holding fewer than 12 slots, including slots transferred or lost for non-use by a carrier since adoption of the allocation rules in December 1985, at the airport; (2) exclude non-limited incumbents from participating in a lottery of unallocated slots until all new entrant and limited incumbent participants had completed their selections; (3) restrict transfer of the slots obtained by new entrants and limited incumbents for 24 months after selection in a lottery and withdraw the slots upon any sale or merger of the operator if the carrier obtaining the slots would, as a result, hold a combined slot base of more than 12 slots; (4) increase the percentage of slots use required to avoid withdrawal for non-use to 90 percent or, for slots allocated for less than 5 days per week, 65 percent; (5) not apply the use-or-lose provisions to slots held or operated by a carrier in bankruptcy until the expiration of 60 days after the initial bankruptcy filing, 30 days after cessation of operations, or up to 20 days after filing a Hart-Scott-Rodino notice with the Department of Justice; (6) require the reporting of international slot use by U.S. carriers already required to report domestic slot use; (7) disallow counting the use of a domestic slot for a flight for which the carrier has obtained an international slot under § 93.217; and (8) remove obsolete penalty provisions.

Discussion of Comments

The Department received 23 comments covering all of the various issues raised in Notice No. 88-18A. This discussion divides the comments into the following categories: (1) Lottery procedures and restrictions on transfer of lottery slots; (2) notice to new entrants and limited incumbents of pending slot sales; (3) minimum slot use percentage; (4) bankruptcy provisions; (5) reporting the use of international operations; and (6) bimonthly slot use reports. Comments received on Notice 88-18 that were considered but not addressed in the SNPRM are not discussed here because they are no longer germane due to changes in the

proposal or do not address issues beyond those covered by the comments to the SNPRM.

Lottery Procedures and Restrictions on Transfer of Lottery Slots

Most of the commenters support the procedures as proposed. The City of Chicago Department of Aviation concurs with the Department's proposed definition of limited incumbent and considers the proposed lottery provisions and restrictions reasonable, fair, and appropriate to ensure that slots are allocated for real service goals. The Port Authority of New York and New Jersey and the Metropolitan Washington Airports Authority (MWAA) view the creation of the limited incumbent carrier as pro-competitive. Midwest Express Airlines supports encouraging the sale of marginally used slots to limited incumbents and new entrants. America West Airlines supports extending the status of limited incumbent to carriers holding up to 12 slots.

Several commenters seek to modify the proposal. Northwest Airlines generally concurs with the proposed amendments governing the lottery process and slot transfer but believes that incumbent carriers should not be precluded from obtaining permanent slot assignments by lottery. United Airlines also believes that the Department should revise the proposed rule to allow permanent allocations to incumbent lottery participants. America West urges permitting intra-airport trades with incumbents of slots obtained in a lottery and reducing the mandatory operating period for lottery slots to one year. The City of New York Department of Business Services, the Port Authority of New York and New Jersey, and other commenters support merging air carrier and commuter slots into a single slot pool. Business Express believes that the proposed rule unfairly penalizes incumbent carriers by denying them equal participation in the lotteries. The Staff of the Bureau of Economics of the Federal Trade Commission (FTC) comments that transfers likely represent an efficient reallocation of resources" and that the proposed transfer restrictions would perpetuate any misallocation of resources for two years; the FTC staff suggests disqualifying from future lotteries a carrier that sells its lottery slots too quickly.

Two commenters seek special treatment for foreign carriers. Air Jamaica Limited wants the FAA to permanently designate slots for foreign carrier operations or recognize foreign carriers' right to slots based on historical use. Similarly, Air Canada urges the Department to reserve a permanent pool of recaptured slots to permit foreign carriers to implement rights their governments obtain under future bilateral agreements.

Two primary purposes of this amendment are to achieve maximum utilization of the high density airports' capacity and to enhance competition by affording new entrant and limited incumbent carriers greater access. Equal participation by and permanent allocation of lottery slots to incumbent carriers would reduce the opportunities for new entrants or limited incumbents to obtain slots. The final rule therefore adopts the restrictions on participation by and allocation of slots to incumbents as proposed. Establishing a single slot pool is not within the scope of the proposed rule and is therefore not addressed here. The suggestion to use commuter slots to increase the availability of air carrier slots is not addressed in this rulemaking action but may be reconsidered in the future.

The final rule relaxes the proposed restrictions by allowing intra-airport trades to accord new entrants and limited incumbents greater scheduling flexibility to avoid the forced perpetuation of any misallocation of resources. The two-year mandatory operating period, however, is retained to assure that slots obtained in a lottery are likely to be used for operations by new entrants and limited incumbents and not sold back to other slotholders.

No lottery slots will be set aside exclusively for foreign carriers because making the slots available for use by both domestic and foreign carriers will enhance their utilization. The current slot rules already provide an effective mechanism at O'Hare and Kennedy for allocating slots to foreign carriers as needed without permanent slot designations or pools. A similar mechanism is not warranted for LaGuardia and National because international carriers can serve the same city destinations through airports without slot restrictions, namely, Newark, Baltimore-Washington International, Dulles International, and, except from 3 p.m. to 8 p.m., Kennedy. Furthermore, the FAA does and continues to recognize historical rights under § 93.217(a)(5).

Notice to New Entrants and Limited Incumbents of Pending Slot Sales

Public agencies in their comments suggest establishing a list of available slots or prospective slot purchasers, but support for mandatory pre-sale notice is mixed. The Michigan Department of Transportation Bureau of Aeronautics (MDOT) supports requiring incumbent carriers to give notice of pending slot sales and leases because such notice could increase competition. The Port Authority of New York and New Jersey supports having large incumbents advise new entrants and limited incumbents of opportunities to purchase or lease slots that come on the market. It proposes that the FAA establish an electronic bulletin board to provide notice of pending slot sales or lease opportunities. The Chicago Department of Aviation supports establishing a formal list of qualified new entrants and limited incumbents planning to take part in any slot lottery, and publishing this list in the **Federal Register**. It also states, however, that incumbents should not be required to notify new entrants and limited incumbents of pending slot sales because this adds a new layer of bureaucracy and could impede the buy/sell system. MWAA does not object to establishing a formal list of interested carriers who qualify as new entrants and limited incumbents or providing simple notice of slot availability.

Most of the airlines oppose the notice proposal. Air Transport Association of America (ATA) considers the notice requirement useless and time-consuming, because any carrier interested in acquiring slots can monitor their availability. By contrast, America West supports this proposal because it says it was unaware of certain past opportunities to purchase slots and believes that the proposal creates more of a market mechanism than now exists.

The Department concludes that a notice requirement will not enhance competition or slot utilization to an extent that warrants adoption of the proposal, which would impose an additional burden on the transfer of slots. The final rule, therefore, does not require incumbents to publish slot sale offerings.

Minimum Slot Use Percentage

The minimum slot use proposal elicited a mixture of suggested modifications. Many commenters support the 90% weekday standard. Among them are the Port Authority of New York and New Jersey, America West Airlines, MDOT, Air Jamaica Limited, MWAA, Air Canada, Senator Charles S. Robb, and the Coles County Airport Authority, Mattoon, IL. The Staff of the Bureau of Economics of the Federal Trade Commission (FTC) submitted a comprehensive analysis showing that most carriers' slot usage met or exceeded the proposed 90% minimum for weekday slots.

ATA carriers propose an 80%, Monday through Friday, slot utilization requirement, with all three-day national

holiday weekends and non-weekend holidays excluded from this standard. Delta Air Lines, USAir, Trans World Airlines, and United Airlines all support the comments submitted by ATA. The Chicago Department of Aviation supports increasing the current usage requirements for existing slots. However, it views the 90% weekday slot use requirement as too rigid for air carriers operating at O'Hare and suggests a standard that adjusts for inclement weather and holiday-related cancellations.

Other commenters urge a minimum use requirement not to exceed 75%, further tempered by factors ranging from weather to the size of a carrier's slot base. Viewing the 90% weekday usage requirement as unrealistic, unreasonable and unfair, Business Express suggests a method that evaluates the usage of a carrier's entire slot pool and asserts that any usage requirement over 75% would unfairly penalize short haul carriers. The Regional Airline Association believes that the maximum slot usage requirement should be 75%. Air Wisconsin asserts that the 90% weekday slot use requirement should only apply to carriers that have at least 100 air carrier slots or 150 commuter slots at an individual airport, or urges a 75% minimum use percentage based upon operations during the five weekdays. Northwest Airlines urges the following modifications to the proposed rule: (1) A minimum use requirement no higher than 75%; (2) exempting a carrier's slots from withdrawal if its overall slot utilization at that airport equals or exceeds 85% for the reporting period; and (3) excusing cancellations due to mechanical, weather, or other conditions beyond a carrier's control. Midwest Express suggests a minimum usage requirement for limited incumbents below that for carriers with a large number of slots.

The Department has determined that the proposed two-tier minimum percentage system (90% use for weekdays for slots held 5 or more days, and 65% for all others) would complicate slot use enforcement and create loopholes for carriers to meet the minimum use requirements without maximizing use of the slots they hold. For example, Carrier A, holding a 7-day slot at 1200, could trade Monday, Tuesday, and Wednesday to Carrier B, also holding a 7-day slot at 1200, in exchange for Carrier B's 1200 slot on Monday, Tuesday, and Wednesday. Both Carriers A and B would then each hold two distinct slots at 1200, one 3-day slot and one 4-day slot. Under the proposed two-tier system, prior to the trade the carriers' use of each slot would have to meet or exceed 90%. As a result of the trade, the less stringent 65% minimum would apply while the two carriers' pre-trade flight schedules remain unaffected.

As another way to fall under the 65% minimum, a carrier could create two holding companies and split each of its slots between them, one holding all the carrier's slots the first half of the week and the other holding the same slots the second half, while the carrier operates the slots all 7 days. A two-tier minimum requirement would also introduce complications where, as other examples, a non-carrier holds a slot all 7 days of a week, but one operator uses it 3 days and a second operator uses it the other 4 days, or where two carriers hold the same slot for different days of the week but have leased it to a third carrier for all 7 days.

Because the Department has decided not to adopt a two-tier system, weekend usage of slots will not be excluded from the minimum use requirements. For the reasons set forth below, the Department adopts an 80% minimum use requirement that applies to all slots all 7 days of the week.

In determining a slot usage minimum, the Department wanted to achieve a balance that would not jeopardize the viability of the smaller carriers while still promoting the efficient use of slots. To that end, it considered the comments raising the potential problems of sporadic cancellations caused by weather, mechanical failure, or schedule reductions on a holiday; the 80% requirement factors in these exigencies and should not subject slots to withdrawal based on these cancellations alone. This higher percentage should encourage carriers to hold no more slots than their markets demand, potentially freeing up underutilized slots for use by other carriers without imposing impractically stringent use requirements.

The 80% requirement also closely equates to the intended overall impact of the two-tier slot usage requirement proposed in the SNPRM. Using 44 weekdays and 17 weekend days as representative of the bimonthly reporting period to which the percentage usage requirement applies, a 90% weekday and 65% weekend formula would require a slot to be operated 39 weekdays and 11 weekend days, or 50 total days, out of 61 days. An overall 80% requirement compels 48 days of use out of a 61-day reporting cycle.

The 80% requirement is also based on an analysis of historical slot use. As the FTC staff comment reports, general slot use by the major slotholders at the high density airports already approaches or exceeds 90%. The closer the use requirement approaches 90%, the more severely it will impact the holders of fewer slots. This historical slot use indicates that a requirement greater than 80% may disproportionately affect the class of carriers for which this amendment seeks to enhance opportunities while providing no further incentive, until it exceeds 90%, for the major slotholders to increase their slot use. The 80% requirement thus accomplishes the twin objectives of improving efficiency and increasing potential access for new entrants without substantially disrupting existing air service.

The Department recognizes that any requirement exceeding 71% for a weekly slot would require flying low-demand weekend periods or turning in the slot permanently for those days. It is not the purpose of this amendment to compel carriers, to avoid slot withdrawal, to fly empty aircraft on weekends when demand does not warrant the operation; in such cases, the carrier may dispose of the slot for those days it does not plan to operate and retain the slot the remaining days of the week.

Bankruptcy Provisions

The proposed bankruptcy provisions drew relatively few comments. USAir suggested a blanket waiver from the minimum slot use requirement for 60 days after closing on the purchase of a bankrupt airline's slots. America West Airlines supports the bankruptcy provisions as proposed. MWAA opposes extending the moratorium on the minimum slot use requirement in a bankruptcy situation, due to the financial and service impact on an airport.

The rule as adopted is merely refined for practicality in implementation and compliance but otherwise remains unchanged from the proposal. It provides for a one-time 60-day exemption from the date the initial bankruptcy petition is filed, a 30-day exemption from the date of submission of information required by Hart-Scott-Rodino or other Federal law regarding a proposed transfer of assets, and a 30-day exemption following total cessation of operations at a slot-controlled airport. The FAA has previously granted start-up waivers for purchasers of slots in bankruptcy but does not deem an automatic 60-day moratorium in every case, as USAir suggests, as favorable for competition or efficient use of airport capacity. The Department recognizes the disruption in service that an airline

bankruptcy may engender. But continuing to apply the minimum use requirements and consequently withdrawing the slots will impose time pressures that the bankruptcy proceedings cannot realistically accommodate, and expedited reinstatement of service will not necessarily follow.

Reporting Use of International Operations

The U.S. carriers that operate international routes oppose a requirement to report their international slot usage, as does ATA. Delta Air Lines questions why only U.S. carriers, and not foreign airlines, would be subject to this reporting requirement.

All U.S. carriers holding slots have developed systems for routinely reporting their slot usage. Five out of seven carriers are already reporting their international slot usage along with their domestic usage. The rule as adopted, therefore, has little if any practical impact, and the information provided will greatly assist the FAA's administration of slots. The rule will not require reporting by non-U.S. carriers because the number of slots held by any individual foreign carrier at JFK and O'Hare Airports is limited.

Delta claims that the proposed prohibition against reporting the use of domestic operations in international slots could adversely affect development of its operations at Kennedy International Airport. It seeks flexibility to use domestic slots for international operations that have been assigned international slots. Also opposing the proposed prohibition, TWA similarly argues in favor of scheduling flexibility.

America West Airlines supports the proposed regulations regarding international slots, as does MDOT. MDOT believes that international flights should not be counted toward meeting the minimum slot usage requirement because that practice reduces U.S. communities' access to the national air transportation system.

The Department finds the prohibition against counting international flights toward the minimum use of domestic flights necessary because of the different rules governing withdrawal of international vis-a-vis domestic slots. International slots are not subject to the same withdrawal provisions as domestic slots. Thus, an international flight could be used to fulfill a domestic slot use requirement while the unused international slot escapes withdrawal. Allowing such scheduling flexibility to international carriers not only disadvantages domestic carriers, it also perpetuates underutilization of the airport's capacity at their expense. Scheduling flexibility for Delta and other carriers operating international routes can still be achieved through the trading permitted under 91.217(a)(2).

Bimonthly Slot Use Reports

Although the SNPRM did not propose to change the reporting cycle for slot use reports, several commenters suggest extending it. ATA recommends reporting of slot usage quarterly, if not semiannually. USAir, Northwest Airlines, TWA, and United Airlines all support ATA's recommendation. The Regional Airline Association also urges extending the reporting cycle to quarterly.

The bimonthly reports are one source the FAA uses to determine whether slot usage is meeting the minimum requirement. If the reporting period were extended, that information would come in later, delaying the FAA's withdrawal and temporary reallocation of underutilized slots. Slots that another carrier could make greater use of would remain underutilized that much longer. Extending the reporting period would therefore run counter to enhancing the efficient use of slots, and the Department declines to make that change.

Section by Section Description of the Rule

Section 93.213(a)(5) (definition of "limited incumbent carrier")

The rule will establish a limited incumbent carrier status. Limited incumbents are defined as air carriers or commuter operators with fewer than 12 slots, including slots previously lost for non-use or sold to other carriers since December 16, 1985. This definition comports with the definition of "new entrant air carrier" in Pub. L. 101–508.

The SNPRM's preamble discussed limited incumbents as carriers holding fewer than 12 slots, but the text of the rule as proposed in the SNPRM would qualify a carrier holding fewer than 12 air carrier slots or 12 commuter operator slots as a limited incumbent. Under that definition, a carrier could hold any number of slots in one category and, so long as it held less than 12 slots in the second category, still qualify as a limited incumbent for the purpose of selecting slots in the second category at a lottery. Such a rule would facilitate the entry of new services, but not necessarily the entry of new carriers.

In defining "limited incumbent carrier," the rule as adopted draws no distinction between air carrier and commuter operator slots, but looks to the total number of slots held in both categories in any combination at the particular airport. This definition is consistent with the existing "new entrant carrier" definitions in § 93.213(a) and section 9126 of Public Law 101–508 (104 Stat. 1388–371), neither of which draws any distinction among the types of slots allocated.

Section 93.221(a)(1)

The change to § 93.221(a)(1) merely corrects the address where requests for confirmation of slot transfers are to be sent.

Section 93.221(a)(5) (slot transfer restrictions)

The rule as adopted imposes new restrictions on slots allocated by lottery to new entrant and limited incumbent participants. The restrictions apply only to slots allocated to a new entrant or limited incumbent carrier in a lottery held after June 1, 1991. Slots acquired by other incumbent carriers will not be subject to the same restrictions, because the allocation to the incumbent would expire on the date of the next lottery. The restrictions are intended to make participation in any lottery financially and logistically impractical for a carrier seeking only to profit from the sale of the slots obtained.

Specifically, until a slot has been used continuously for 24 months by the new entrant or limited incumbent holder, the slot can be sold or leased only to another new entrant or limited incumbent carrier, and can be traded only for another slot or slots at the same airport. Previously, lottery slots could be transferred without restriction after 60 days of operation. Many slots allocated to new entrant carriers under that procedure were sold to larger carriers, sometimes immediately after the minimum 60-day period. Also, peak period slots obtained by new entrant carriers were traded to incumbents for less valuable off-peak slots (and, presumably, other consideration), and the less valuable slots were than returned to the FAA.

The SNPRM proposed to restrict trades, as well as sales and leases, to other new entrant or limited incumbent carriers. This narrow restriction on trading, however, would unduly hamper a carrier's scheduling flexibility. Therefore, the rule as adopted allows trades with any carrier at the same airport, subject to the condition that, if the new entrant or limited incumbent carrier trades away a slot it has obtained in a lottery and then fails to use the slot it obtained through the trade, the trade is automatically void,

and the lottery slot shall be returned to the FAA for reallocation at the next lottery. This condition will encumber the value of slots obtained in a lottery, but should not interfere with a more efficient allocation of slots to meet each trading carriers' genuine scheduling needs.

Section 93.223(b), (c)(3), (f) (slot withdrawals)

The amendment of § 93.223(b) is for clarifying purposes only and does not alter the substance of the prior provision. Subparagraphs (1) through (5) have been merged into a single subsection.

The change to § 93.223(c) comports with the revised definition of a limited incumbent. The withdrawal exemption limit is set at 12 or fewer slots, however, to prevent withdrawal from placing a carrier into limited incumbent status, which is defined as holding fewer than 12 slots. The revision also avoids treating differently a carrier that operates slots other than the ones it holds, to the extent that it is not a net lessor of slots.

Similarly, § 93.223(f) uses 12 slots as the limit below which slots will not be withdrawn in the event of a merger but requires surrender of all other slots that were obtained by virtue of new entrant or limited incumbent status. Use for 24 continuous months of any slot obtained by a new entrant or limited incumbent removes the slot's special restrictions, and this provision would then no longer apply.

Section 93.225 (c), (e), (g), (h) (lottery procedures)

The rule as adopted will limit primary participation in slot lotteries conducted under § 93.225 to new entrant and limited incumbent carriers. These primary participants must hold appropriate DOT economic authority and an FAA part 121 or part 135 operating certificate. In the past, carriers that had made only substantial progress toward obtaining an FAA operating certificate often failed to continue or even start operations after selecting slots; the requirements to hold appropriate authority will reduce the likelihood of the recurrence of this undesirable result.

New entrant and limited incumbent carriers will not compete in the lottery with carriers already holding a substantial number of slots at the airport. The prior procedure permitting new entrants to select 4 slots rather than 2 in the first lottery sequence will be retained. Limited incumbents may select 2 slots each turn, as before. Carriers holding 12 or more slots at an airport will be eligible to participate in the lottery only after all participating new entrants and limited incumbents have completed their selections or have reached the 12 slot limit. Slots selected by carriers holding 12 or more slots, or by new entrants or limited incumbents after their slot base reaches 12, will be allocated only until the date of the next lottery at that airport. A carrier that has selected or otherwise obtained 12 or more slots will no longer qualify as a limited incumbent.

Other lottery procedures in § 93.225 remain unchanged.

Section 93.227(a), (b), (d), (g) (minimum slot use; bankruptcy)

Minimum slot use. The minimum percentage of use for slots under § 93.227(a) will increase to 80 percent. This adjustment will reduce the practice of protecting an unused slot by distributing operations across several slots during the reporting cycle. Each day that a slot is held will be counted in calculating the percentage of use, whether weekdays or weekends. Using different bases for calculation depending on whether a slot is held for five weekdays or another period leaves too much room for circumvention of this new provision. A purpose of the amendment, to enhance capacity utilization, would be diminished as a result. It is not the purpose of this amendment, however, to compel carriers to fly empty aircraft, to avoid withdrawal of the slot, on weekends when demand does not warrant the operation; in such cases, the carrier may dispose of the slot for those days it does not plan to operate and retain the slot for the remaining days of the week.

Carriers will more likely exercise their ability to sell or lease underutilized slots rather than return them to the FAA or lose them through non-use. Forcing this choice will place more slots on the market and thereby enhance competitive opportunities for new entrant and limited incumbent carriers.

Reporting use of international operations. Operating a flight in a slot obtained for an international flight under § 93.217 will not count toward the use of any domestic slot. International slots are not subject to the minimum use requirements of § 93.227. The rule as adopted prohibits reporting the use of an underutilized domestic slot for a flight for which the carrier has already been provided an international slot. There is no restriction against using a domestic slot for an international flight, if the carrier has not obtained an additional slot for the flight under § 93.217.

The rule as adopted also amends § 93.227(g) to require reporting the use of international slots by U.S. carriers that must now report the use of domestic slots under § 93.227(i). This requirement imposes a minimal burden on most U.S. carriers, since they already routinely reported use of international slots as part of their bimonthly slot use reports under § 93.227(i). Including international slots in the same report will help the FAA monitor slot use and patterns of airport operations in peak periods. Reporting by non-U.S. carriers is not required at this time.

Bankruptcy provision. The rule as adopted retains a one-time 60-day suspension of the minimum slot use requirement, running from the initial bankruptcy petition. It adds a 30-day period running from the cessation of scheduled operations at a high density airport by a slot operator in bankruptcy. And it creates a 30-day window after the parties to a slot transfer submit additional information in response to a request by a Federal government antitrust or economic oversight agency if the slots involved have not become subject to withdrawal as of the day the information is submitted. The 30-day window will permit the Department of Justice or other Federal agency to conduct reviews of substantial transfers of assets for anticompetitive or economic implications and obtain supplementary information from the carrier without jeopardizing the use-or-lose status of the slots subject to the transfer.

This regulatory structure establishes when unused slots would revert to the FAA, and provides sufficient time for the sale of slots within the bankruptcy process.

Section 93.229 (penalty provision)

As adopted in December 1985, § 93.229 provided for a maximum $1,000 civil penalty for each unlawful takeoff or landing and for each day that a slot is not returned to the FAA when required. In practice, all enforcement actions against violators of the High Density Rule (Part 93, subpart K) and the slot transfer and allocation rules (Part 93, subpart S) have cited violations of § 93.125, which prohibits an operation at a high density traffic airport during restricted hours without an Air Traffic Control reservation. The applicable penalty provisions are contained in § 901 of the Federal Aviation Act of 1958, as amended, and FAR part 13. The separate penalty provision in § 93.229 is unnecessary and, since Congress increased the maximum penalty for carriers to $10,000 in 1987 (Section 204, Pub. L. 100–223), inconsistent with

current law. The rule as adopted removes § 93.229 in its entirety.

Regulatory Evaluation Summary

While the final rule does not significantly alter the current operating environment for either air carrier or commuter operations at the high density airports, it does include several substantive measures that will enhance competition and efficient use of capacity at these key airports. It also incorporates a number of relatively straightforward housekeeping measures, *i.e.*, a definition of limited incumbent carrier, a revision of the slot-use reporting requirements for international and domestic flights, a slight modification of the timetable for slot withdrawal in the event of carrier bankruptcy, and elimination of an obsolete penalty provision.

The revised rule does not withdraw existing slots or create new ones. However, the rule does establish a new incentive to use current capacity—the available pool of airport slots—more efficiently. The amendment increasing the minimum slot-use requirements to 80 percent will make it more difficult for incumbent carriers to hold slots off the market by manipulating flight schedules and operations to meet minimum use requirements and is designed to encourage carriers to sell or lease their marginal slots.

The current practice by some carriers of "babysitting" slots for possible future use may have some merit as an individual corporate strategy, but it entails real economic costs for the system; it is an inefficient use of scarce present resources. In effect, the amendment increases the incentives for carriers to use each slot efficiently in the short term, e.g., to use it for part of the week, as market conditions warrant, and sell or lease it for the days the carrier does not plan to operate a flight. The effects on the major carriers' operations are minimal; no carrier risks losing a slot that it is actually using on a regular basis to meet passenger demand. This change will produce a small but important efficiency gain, increasing overall capacity utilization at the high density airports in the near term. Because of the importance of the high density airports within the national air traffic system, even a marginal improvement in current capacity utilization at these airports is economically meaningful.

Moreover, the 80-percent-use requirement has a procompetitive aspect as well. By creating a stronger incentive for carriers to make underutilized slots available on the market, even on a part-time basis, the rule opens up some new competitive opportunities for new entrant and limited incumbent carriers. In economic terms, both the air traffic system and the carriers operating few or no flights to a high density airport can be expected to benefit from a rule that requires more efficient slot use: New entrants and limited incumbents can gain access to the airport or improve their competitive position by taking advantage of some previously underutilized slots; and the national system benefits from capturing more of the real economic value of some scarce resources (slots) that are only minimally used at present. The public is likely to gain as well—both from the improved service and lower fares that additional competition should generate and, more broadly, from an improvement in economic efficiency at these critical airports (fewer wasted slots). While these benefits are not directly quantifiable, the Department finds that the net economic effects of the 80-percent-use requirement are positive. In terms of regulatory burden, this modification is entirely neutral and will require no change in airline reporting.

The second major modification to the rule involves the allocation of slots by lottery to new entrants and limited incumbents, as well as some additional protections for slots held by limited incumbents. In brief, these revised lottery procedures and slot resale provisions are designed to safeguard competition by ensuring that new entrants and limited incumbents receive first opportunity to secure slots in the lottery and, once they have secured them, that the slots are actually used by new entrants or limited incumbent carriers, rather than immediately sold, leased, or traded to larger carriers. The limitations on resale or other disposition of slots obtained under the lottery are not excessive, do not unreasonably interfere with the market mechanism, and are fully consistent with the objectives of the slot system in strengthening effective competitive access to these airports by new entrants and limited incumbent carriers. The economic effects of reduced access to these slots by large airlines are offset, in the Department's judgment, by the competitive benefits of ensuring improved access for new entrants and limited incumbents. Moreover, while the Department will assume some additional administrative burden in implementing and monitoring these provisions, the regulatory burden is negligible; these lottery procedures and resale restrictions impose no new reporting requirements on the industry.

The housekeeping amendments have little economic impact but do serve to clarify and in some cases simplify operation of the slot system at the high density airports. The elimination of the obsolete penalty provision in § 93.299 is consistent with sound regulatory practice and the Administrative Procedures Act. The revised definition of a limited incumbent carrier comports with the definition of a new entrant air carrier in Public Law 101–508, and prevents a potential definitional conflict. The revised timetable for withdrawal of slots in the event of carrier bankruptcy adds a 30-day window for Federal review of slot transfers or following cessation of service, allowing more time for the orderly sale of slots within the bankruptcy process; the modification stems from the Department's recent experience with carrier bankruptcies. And, finally, the revised slot-use reporting requirement with respect to international and domestic flights codifies the standard industry practice of reporting both types of operations; most carriers find it less costly to report both their international and domestic flight operations and already routinely do so. In the Department's judgment, adopting this practice in the revised rule will ensure reporting consistency and impose no undue burden on the industry. This summary represents the regulatory evaluation for this rulemaking, and it is not necessary to place a separate document in the docket.

Regulatory Flexibility Act Determination

The Department has determined that the amendment (1) is not a major rule under Executive Order 12291; and (2) is a significant rule under Department of Transportation Regulatory Policies and Procedures (44 FR 11034; February 26, 1979). For the reasons discussed above under the Regulatory Evaluation Summary, I certify that under the criteria of the Regulatory Flexibility Act, this rule will not have a significant economic impact on a substantial number of small entities.

International Trade Impact Analysis

The rule will not affect the sale of foreign aviation products or services in the United States, nor will the rule affect the sale of U.S. products or services in foreign countries. Accordingly, the rule has no international trade impact.

Paperwork Reduction Act

This amendment provides for a minor change in the required reporting of information by air carriers to the FAA. Under the requirements of the Federal Paperwork Reduction Act, the Office of Management and Budget previously has

approved the information collection provision of Subpart S under OMB Approval No. 2120–0524. The reporting requirements of the rule as amended are being submitted to OMB for review and will become effective when the requirements are approved.

Federalism Implications

This amendment will not have substantial direct effects on the states, on the relationship between the national government and the states, or on the distribution of power and responsibilities among the various levels of government. Therefore, in accordance with Executive Order 12612, it is determined that this action does not have sufficient federalism implications to warrant the preparation of a Federalism Assessment.

List of Subjects in 14 CFR Part 93

Air traffic control, Airports, Alaska, Navigation (air), Reporting and recordkeeping requirements.

The Rule

For the reasons set out above, the Department of Transportation amends 14 CFR Part 93 of the Federal Aviation Regulations as follows:

PART 93—SPECIAL AIR TRAFFIC RULES AND AIRPORT TRAFFIC PATTERNS

1. The authority citation for part 93 continues to read as follows:

Authority: 49 U.S.C. app. 1302, 1303, 1348, 1354(a), 1421(a), 1424, 2451 et seq.; 49 U.S.C. 106(g).

2. In § 93.213, new paragraph (a)(5) is added to read as follows:

§ 93.213 Definitions and general provisions.

(a) * * *

(5) *Limited incumbent carrier* means an air carrier or commuter operator that holds or operates fewer than 12 air carrier or commuter slots, in any combination, at a particular airport, not including international slots, Essential Air Service Program slots, or slots between the hours of 2200 and 0659 at Washington National Airport or LaGuardia Airport. However, for the purposes of this paragraph (a)(5), the carrier is considered to hold the number of slots at that airport that the carrier has, since December 16, 1985:

(i) Returned to the FAA;

(ii) Had recalled by the FAA under § 93.227(a); or

(iii) Transferred to another party other than by trade for one or more slots at the same airport.

* * * * *

§ 93.221 [Amended]

3. In § 93.221, paragraph (a)(1) is amended by removing the reference "Slot Transfers, Office of the Chief Counsel, Rules Docket, 800 Independence Avenue, SW., AGC–10 and adding in its place "Slot Administration Office, AGC–230, Office of the Chief Counsel, Federal Aviation Administration, 800 Independence Ave., SW.".

4. In § 93.221, paragraph (a)(5) is revised to read as follows:

§ 93.221 Transfer of slots.

(a) * * *

(5)(i) Until a slot obtained by a new entrant or limited incumbent carrier in a lottery held under § 93.225 after June 1, 1991, has been used by the carrier that obtained it for a continuous 24-month period after the lottery in accordance with § 93.227(a), that slot may be transferred only by trade for one or more slots at the same airport or to other new entrant or limited incumbent carriers under § 93.221(a)(5)(iii). This transfer restriction shall apply to the same extent to any slot or slots acquired by trading the slot obtained in a lottery. To remove the transfer restriction, documentation of 24 months' continuous use must be submitted to the FAA Office of the Chief Counsel.

(ii) Failure to use a slot acquired by trading a slot obtained in a lottery for a continuous 24-month period after the lottery, shall void all trades involving the lottery slot, which shall be returned to the FAA. All use of the lottery slot shall be counted toward fulfilling the minimum use requirements under § 93.227(a) applicable to the slot or slots for which the lottery slot was traded, including subsequent trades.

(iii) Slots obtained by new entrant or limited incumbent carriers in a lottery may be sold, leased, or otherwise transferred to another entrant or limited incumbent carrier after a minimum of 60 days of use by the obtaining carrier. The transfer restrictions of § 93.221(a)(5)(i) shall continue to apply to the slot until documentation of 24 months' continuous use has been submitted and the transfer restriction removed.

* * * * *

5. In § 93.223, paragraphs (b), (c)(3), and (f) are revised to read as follows:

§ 93.223 Slot withdrawal.

* * * * *

(b) Separate slot pools shall be established for air carriers and commuter operators at each airport. The FAA shall assign, by random lottery, withdrawal priority numbers for the recall priority of slots at each airport. Each additional permanent slot, if any, will be assigned the next higher number for air carrier or commuter slots, as appropriate, at each airport. Each slot shall be assigned a designation consisting of the applicable withdrawal priority number; the airport code; a code indicating whether the slot is an air carrier or commuter operator slot; and the time period of the slot. The designation shall also indicate, as appropriate, if the slot is daily or for certain days of the week only; is limited to arrivals or departures; is allocated for international operations or for EAS purposes; and, at Kennedy International Airport, is a summer or winter slot.

(c) * * *

(3) Except as provided in § 93.227(a), the FAA shall not withdraw slots held at an airport by an air carrier or commuter operator holding and operating 12 or fewer slots at that airport (excluding slots used for operations described in § 93.212(a)(1)), if withdrawal would reduce the number of slots held below the number of slots operated.

* * * * *

(f) For 24 months following a lottery held after June 1, 1991, a slot acquired in that lottery shall be withdrawn by the FAA upon the sale, merger, or acquisition of more than 50 percent ownership or control of the carrier using that slot or one acquired by trade of that slot, if the resulting total of slots held or operated at the airport by the surviving entity would exceed 12 slots.

6. In § 93.225, paragraphs (c), (e), (g), and (h) are revised to read as follows:

§ 93.225 Lottery of available slots.

* * * * *

(c) Slot allocation lotteries shall be held on an airport-by-airport basis with separate lotteries for air carrier and commuter operator slots. The slots to be allocated in each lottery will be each unallocated slot not necessary for international or Essential Air Service Program operations, including any slot created by an increase in the operating limits set forth in § 93.123(a).

* * * * *

(e) Participation in a lottery is open to each U.S. air carrier or commuter operator operating at the airport and providing scheduled passenger service at the airport. Any U.S. carrier that is not operating scheduled service at the airport and has not failed to operate slots obtained in previous lotteries, or slots traded for those obtained by lottery, but wishes to initiate scheduled passenger service at the airport, shall be included in the lottery if that operator notifies, in writing, the Slot Administration Office, AGC–230, Office of the Chief Counsel, Federal Aviation

Administration, 800 Independence Avenue SW., Washington, DC 20591. The notification must be received 15 days prior to the lottery date and state whether there is any common ownership or control of, by, or with any other air carrier or commuter operator as defined in § 93.213(c). New entrant and limited incumbent carriers will be permitted to complete their selections before participation by other incumbent carriers is initiated.

* * * * *

(g) To select slots during a slot lottery session, a carrier must have appropriate economic authority for scheduled passenger service under Title IV of the Federal Aviation Act of 1958, as amended (49 U.S.C. App. 1371 et seq.), and must hold FAA operating authority under part 121 or part 135 of this chapter as appropriate for the slots the operator seeks to select.

(h) During the first selection sequence, 25 percent of the slots available but no less than two slots shall be reserved for selection by new entrant carriers. If new entrant carriers do not select all of the slots set aside for new entrant carriers, limited incumbent carriers may select the remaining slots. If every participating new entrant carrier and limited incumbent carrier has ceased selection of available slots or has obtained 12 slots at that airport, other incumbent carriers may participate in selecting the remaining slots; however, slots selected by non-limited incumbent carriers will be allocated only until the date of the next lottery.

* * * * *

7. In § 93.227, paragraphs (a), (b), (d), and (g) are revised to read as follows:

§ 93.227 Slot use and loss.

(a) *Minimum slot use.* (1) Except as provided in paragraphs (b), (c), (d), and (g) of this section, any slot not used for 80 percent of the time over a 2-month period shall be recalled by the FAA.

(2) For the purposes of this paragraph (a), operation of a flight for which an international slot was allocated pursuant to § 93.217 will not be considered as use of any other slot, regardless of how the operation is reported by the carrier.

(b) Paragraph (a) of this section does not apply to slots obtained under § 93.225 of this part during:

(i) The first 90 days after they are allocated to a new entrant carrier; or

(ii) The first 60 days after they are allocated to a limited incumbent or other incumbent carrier.

* * * * *

(d) In the case of a carrier that files for protection under the Federal bankruptcy laws and has not received a Notice of Withdrawal from the FAA for the subject slot or slots, paragraph (a) of this section does not apply:

(1) During a period after the initial petition in bankruptcy, to any slot held or operated by that carrier, for:

(i) 60 days after the carrier files the initial petition in bankruptcy; and

(ii) 30 days after the carrier, in anticipation of transferring slots, submits information to a Federal government agency in connection with a statutory antitrust, economic impact, or similar review of the transfer, provided that the information is submitted more than 30 days after filing the initial petition in bankruptcy, and provided further that any slot to be transferred has not become subject to withdrawal under any other provision of this § 93.227; and

(2) During a period after a carrier ceases operations at an airport, to any slot held or operated by that carrier at that airport, for:

(i) 30 days after the carrier ceases operations at that airport, provided that the slot has not become subject to withdrawal under any other provision of this § 93.227; and

(ii) 30 days after the parties to a proposed transfer of any such slot comply with requests for additional information by a Federal government agency in connection with an antitrust, economic impact, or similar investigation of the transfer, provided that—

(A) The original notice of the transfer is filed with the Federal agency within 30 days after the carrier ceases operation at the airport;

(B) The request for additional information is made within 10 days of the filing of the notice by the carrier;

(C) The carrier submits the additional information to the Federal agency within 15 days of the request by such agency; and

(D) Any slot to be transferred has not become subject to withdrawal under any other provision of this § 93.227.

* * * * *

(g) This section does not apply to slots used for the operations described in § 93.217(a)(1) except that a U.S. air carrier or commuter operator required to file a report under paragraph (i) of this section shall include all slots operated at the airport, including slots described in § 93.217(a)(1).

§ 93.229 [Removed]

8. Section 93.229 is removed.

Issued in Washington, DC, on August 12, 1992.

Thomas C. Richards,

Administrator.

[FR Doc. 92-19585 Filed 8-13-92; 10:00 am]

BILLING CODE 4910-13-M

federal register

Tuesday
August 18, 1992

Part V

Department of Health and Human Services

Food and Drug Administration

21 CFR Part 520 et al.

New Animal Drugs; Removal of Obsolete Regulations and Recodification; Rule

DEPARTMENT OF HEALTH AND HUMAN SERVICES

Food and Drug Administration

21 CFR Parts 520, 522, 524, 526, 529, 536, 539, 540, 544, 546, 548, and 555

[Docket No. 89N-0312]

New Animal Drugs; Removal of Obsolete Regulations and Recodification

AGENCY: Food and Drug Administration, HHS.

ACTION: Final rule.

SUMMARY: The Food and Drug Administration (FDA) is amending its animal drug regulations by removing the technical provisions in 21 CFR parts 536, 539, 540, 544, 546, 548, and 555 that contain tests and methods of assay for the certification of new animal drugs that are composed wholly or partly of any kind of penicillin, streptomycin, chlortetracycline, chloramphenicol, or bacitracin. These sections have become obsolete because the statutory provisions regarding certification of the antibiotic drugs were revoked by the Generic Animal Drug and Patent Term Restoration Act of 1988. At the same time, those paragraphs within the sections being deleted that relate to conditions for marketing new animal drugs, which are still effective, are being recodified into 21 CFR parts 520, 522, 524, 526, and 529.

EFFECTIVE DATE: This revocation and recodification becomes effective on August 18, 1992.

ADDRESSES: Written comments to the Dockets Management Branch (HFA-305), Food and Drug Administration, rm. 1-23, 12420 Parklawn Dr., Rockville, MD 20857.

FOR FURTHER INFORMATION CONTACT: Robert S. Brigham, Center for Veterinary Medicine (HFV-238), Food and Drug Administration, 7500 Standish Pl., Rockville, MD 20855, 301-295-8737.

SUPPLEMENTARY INFORMATION: On November 16, 1988, the President signed into law the Generic Animal Drug and Patent Term Restoration Act (GADPTRA) (Pub. L. 100-670, 102 Stat. 3971). GADPTRA amended the Federal Food, Drug, and Cosmetic Act (the act) (21 U.S.C. 301 *et seq.*). The primary thrust of GADPTRA was to establish eligibility for the submission of abbreviated new animal drug applications for drug products first approved in new animal drug applications after the 1962 amendments to the act. GADPTRA also amended 35 U.S.C. 156 and 271 to authorize the extension of patents for animal drug products. GADPTRA removed from the act all provisions for the certification of antibiotic drugs for animal use: Sections 201(w)(3) and 512 (a)(1)(C) and (n) of the act (21 U.S.C. 321(w)(3) and 360b (a)(1)(C) and (n)).

In the Federal Register of May 26, 1989 (54 FR 22741), the agency published a rule which removed the antibiotic certification procedural regulations made obsolete by GADPTRA. This final rule removes the technical regulations that include the requirements for certification and tests and methods of assay contained in 21 CFR parts 536, 539, 540, 544, 546, 548, and 555 concerning specific antibiotic drugs. At the same time, specific provisions concerning conditions of marketing contained in the technical regulations that were established under section 512(i) of the act, which were not affected by GADPTRA, are being recodified within the existing regulations by their route of administration (21 CFR parts 520, 522, 524, 526, and 529). The regulations in part have been editorially revised to reflect current United States Pharmacopeia (U.S.P.) terminology, to be consistent in format to the existing regulations, and to reflect the current labeling of the approved product.

The following table shows the relationship in the CFR section numbers formerly under parts 540 through 555 to this redesignation reflected in parts 520 through 529.

Old section	New section
540.103	520.88
540.103a(c)	520.88a
540.103b(c)	520.88b
540.103c(c)	520.88c
540.103d(c)	520.88d
540.103e(c)	520.88e
540.103f(c)	520.88f
540.103g(c)	520.88g
540.103h(c)	520.88h
540.105(c)	520.90a
540.107	520.90
540.107a(c)	520.90b
540.107b(c)	520.90c
540.107c(c)	520.90d
540.107d(c)	520.90e
540.107e(c)	520.90f
540.119(c)	520.608
540.129	520.1130
540.129a(c)	520.1130c
540.129b(c)	520.1130a
540.129c(c)	520.1130b
540.173a(c)	520.1696c
540.173b(c)	520.1696d
540.174	520.1696
540.174a(c)	520.1696a
540.181b(c)	520.1696b
540.203(c)	522.88
540.207	522.90
540.207a(c)	522.90a
540.207b(c)	522.90b
540.209(c)	522.90c
540.255c(c)	522.1696a
540.274	522.1696
540.274b(c)	522.1696b
540.274c(c)	522.1696c
540.680(c)	529.2464
540.803(c)	526.88
540.814(c)	526.464a
540.814a(c)	526.464b
540.815(c)	526.464c
540.815a(c)	526.464d
540.829(c)	526.1130
540.874	526.1696
540.874a(c)	526.1696a
540.874d(c)	526.1696b
540.874e(c)	526.1696c
540.874f(c)	526.1696d
544.170b(c)	520.2158a
544.173	520.2158
544.173a(c)	520.2158b
544.173b(c)	520.2158c
544.275(c)	522.650
546.110	520.445
546.110c(c)	520.445b
546.110d(c)	520.445c
546.113b(c)	520.445a
546.180	520.2345
546.180a(c)	520.2345a
546.180b(c)	520.2345b
546.180c(c)	520.2345c
546.180d(c)	520.2345d
546.180e(c)	520.2345e
546.180g(c)	520.2345f
546.180h(c)	520.2345g
546.180i(c)	520.2345h
548.112	520.154
548.112a(c)	520.154a
548.112d(c)	520.154b
548.114(c)	520.154c
548.314a(c)	524.154
548.314b(c)	524.155
555.110	520.390
555.110a(c)	520.390a
555.110b(c)	520.390b
555.111(c)	520.390c
555.210(c)	522.390
555.310	524.390
555.310c(c)	524.390a
555.310d(c)	524.390b
555.310e(c)	524.390c
555.310f(c)	524.390d

This rule is being published as a final regulation without prior notice and opportunity for public comment because it reflects new animal drug application approvals codified in the regulations pursuant to section 512(i) of the act (21 U.S.C. 360b(i)) rather than substantive rules of general applicability under the Administrative Procedure Act (5 U.S.C. 551 *et seq.*).

In addition, prior notice and public comment procedures are unnecessary for promulgation of this final rule because the revisions affected merely reflect statutory changes without the exercise of agency discretion, conformance to newer U.S.P. nomenclature, nonsubstantive editorial revisions to reflect current text and format, and current labeling.

List of Subjects

21 CFR Parts 520, 522, 524, 526, and 529

Animal drugs.

21 CFR Parts 536, 539, 540, 544, 546, 548, and 555

Animal drugs, Antibiotics.

Therefore, under the Federal Food, Drug, and Cosmetic Act and under authority delegated to the Commissioner of Food and Drugs, Title 21, Chapter I of the Code of Federal Regulations is amended as follows:

PART 520 [AMENDED]

Part 520 is amended as follows:

1. The authority citation for 21 CFR part 520 continues to read as follows:

Authority: Sec. 512 of the Federal Food, Drug, and Cosmetic Act (21 U.S.C. 360b).

2. The heading for part 520 is revised to read as follows:

PART 520—ORAL DOSAGE FORM NEW ANIMAL DRUGS

3. New §§ 520.88, 520.88a, 520.88b, 520.88c, 520.88d, 520.88e, 520.88f, 520.88g, 520.88h, 520.90, 520.90a, 520.90b, 520.90c, 520.90d, 520.90e, and 520.90f are added to read as follows:

§ 520.88 Amoxicillin oral dosage forms.

§ 520.88a Amoxicillin trihydrate film-coated tablets.

(a) *Specifications.* Each tablet contains amoxicillin trihydrate equivalent to 50, 100, 150, 200, or 400 milligrams of amoxicillin.

(b) *Sponsor.* See No. 053571 in § 510.600(c) of this chapter.

(c) *Conditions of use*—(1) *Dogs*—(i) *Amount.* 5 milligrams per pound of body weight, twice a day.

(ii) *Indications for use.* Treatment of infections of the respiratory tract (tonsillitis, tracheobronchitis), genitourinary tract (cystitis), gastrointestinal tract (bacterial gastroenteritis), and soft tissues (abscesses, lacerations, wounds), caused by susceptible strains of *Staphylococcus aureus, Streptococcus* spp., *Escherichia coli, Proteus mirabilis,* and bacterial dermatitis caused by *S. aureus, Streptococcus* spp., and *P. mirabilis.*

(iii) *Limitations.* Administer for 5 to 7 days or 48 hours after all symptoms have subsided. If no improvement is seen in 5 days, review diagnosis and change therapy. Federal law restricts this drug to use by or on the order of a licensed veterinarian.

(2) *Cats*—(i) *Amount.* 50 milligrams (5 to 10 milligrams per pound of body weight) once a day.

(ii) *Indications for use.* Treatment of infections caused by susceptible organisms as follows: upper respiratory tract due to *S. aureus, Streptococcus* spp., and *E. coli;* genitourinary tract (cystitis) due to *S. aureus, Streptococcus* spp., *E. coli,* and *P. mirabilis;* gastrointestinal tract due to *E. coli;* and skin and soft tissue (abscesses, lacerations, and wounds) due to *S. aureus, Streptococcus* spp., *E. coli,* and *Pasteurella multocida.*

(iii) *Limitations.* Administer for 5 to 7 days or 48 hours after all symptoms have subsided. If no improvement is seen in 5 days, review diagnosis and change therapy. Federal law restricts this drug to use by or on the order of a licensed veterinarian.

§ 520.88b Amoxicillin trihydrate for oral suspension.

(a) *Specifications.* When reconstituted, each milliliter contains amoxicillin trihydrate equivalent to 50 milligrams of amoxicillin.

(b) *Sponsor.* See No. 053571 in § 510.600(c) of this chapter.

(1) *Conditions of use.*—(i) *Dogs*—(A) *Amount.* 5 milligrams per pound of body weight twice daily.

(B) *Indications for use.* Treatment of infections caused by susceptible strains of organisms as follows: respiratory tract (tonsillitis, tracheobronchitis) caused by *Staphylococcus aureus, Streptococcus* spp., *Escherichia coli,* and *Proteus mirabilis;* genitourinary tract (cystitis) caused by *S. aureus, Streptococcus* spp., *E. coli,* and *P. mirabilis;* gastrointestinal tract (bacterial gastroenteritis) caused by *S. aureus, Streptococcus* spp., *E. coli,* and *P. mirabilis;* bacterial dermatitis caused by *S. aureus, Streptococcus* spp., and *P. mirabilis;* and soft tissues (abscesses, lacerations, and wounds) caused by *S. aureus, Streptococcus* spp., *E. coli,* and *P. mirabilis.*

(C) *Limitations.* Use for 5 to 7 days or 48 hours after all symptoms have subsided. Federal law restricts this drug to use by or on the order of a licensed veterinarian.

(ii) *Cats*—(A) *Amount.* 50 milligrams (5 to 10 milligrams per pound) once daily.

(B) *Indications for use.* Treatment of infections caused by susceptible strains of organisms as follows: upper respiratory tract due to *Staphylococcus* spp., *Streptococcus* spp., *Hemophilus* spp., *E. coli, Pasteurella* spp., and *P. mirabilis;* genitourinary tract (cystitis) due to *S. aureus, Streptococcus* spp., *E. coli, P. mirabilis,* and *Corynebacterium* spp; gastorintestinal tract due to *E. coli, Proteus* spp., *Staphylococcus* spp., and *Streptococcus* spp.; skin and soft tissue (abscesses, lacerations, and wounds) due to *Staphylococcus* spp., *Streptococcus* spp., *E. coli,* and *Pasteurella multocida.*

(C) *Limitations.* Use for 5 to 7 days or 48 hours after all symptoms have subsided. Federal law restricts this drug to use by or on the order of a licensed veterinarian.

(c) *Sponsor.* See Nos. 000031 and 000332 in § 510.600(c) of this chapter.

(1) *Conditions of use. Dogs*—(i) *Amount.* 5 milligrams per pound of body weight twice daily.

(ii) *Indications for use.* Treatment of bacterial dermatitis due to *S. aureus, Streptococcus* spp., *Staphylococcus* spp., and *E. coli,* and soft tissue infections (abscesses, wounds, lacerations) due to *S. aureus, Streptococcus* spp., *E. coli, P. mirabilis* and *Staphylococcus* spp.

(iii) *Limitations.* Use for 5 to 7 days. Continue for 48 hours after all symptoms have subsided. If no improvement is seen in 5 days, review diagnosis and change therapy. Federal law restricts this drug to use by or on the order of a licensed veterinarian.

(2) [Reserved]

§ 520.88c Amoxicillin trihydrate oral suspension.

(a) *Specifications.* Each 0.8-milliliter dose contains amoxicillin trihydrate equivalent to 40 milligrams of amoxicillin.

(b) *Sponsor.* See No. 053571 in § 510.600(c) of this chapter.

(c) *Related tolerances.* See § 556.510 of this chapter.

(d) *Conditions of use. Swine*—(1) *Amount.* 40 milligrams orally, twice a day using a dosing pump.

(2) *Indications for use.* Treatment of baby pigs under 10 pounds for porcine colibacillosis caused by *Escherichia coli* susceptible to amoxicillin.

(3) *Limitations.* Treat animals for 48 hours after all symptoms have subsided but not beyond 5 days. Do not slaughter during treatment or for 15 days after latest treatment. Federal law restricts this drug to use by or on the order of a licensed veterinarian.

§ 520.88d Amoxicillin trihydrate soluble power.

(a) *Specifications.* Each gram contains amoxicillin trihydrate equivalent to 115.4 milligrams of amoxicillin.

(b) *Sponsor.* See No. 053571 in § 510.600(c) of this chapter.

(c) *Related tolerances.* "See" § 556.38 of this chapter.

(d) *Conditions of use. Nonruminating calves*—(1) *Amount.* 400 milligrams per 100 pounds of body weight twice daily.

(2) *Indications for use.* Treatment of bacterial enteritis when due to susceptible *Escherichia coli* in nonruminating calves.

(3) *Limitations.* Administer by drench or by mixing in milk. Treatment should be continued for 48 hours after all symptoms have subsided but not to exceed 5 days. For use in nonruminating calves only, not for use in other animals which are raised for food production. Do not slaughter animals during treatment or for 20 days after the latest treatment. Federal law restricts this drug to use by or on the order of a licensed veterinarian.

§ 520.88e Amoxicillin trihydrate boluses.

(a) *Specifications.* Each bolus contains the equivalent of 400 milligrams of amoxicillin.

(b) *Sponsor.* See No. 053571 in § 510.600(c) of this chapter.

(c) *Related tolerances.* See § 556.38 of this chapter.

(d) *Conditions of use. Nonruminating calves*—(1) *Amount.* 400 milligrams per 100 pounds of body weight twice daily.

(2) *Indications for use.* Treatment of bacterial enteritis when due to susceptible *Escherichia coli* in nonruminating calves.

(3) *Limitations.* For oral use in nonruminating calves only, not for use in other animals which are raised for food production. Treatment should be continued for 48 hours after all symptoms have subsided but not to exceed 5 days. Do not slaughter animals during treatment or for 20 days after the latest treatment. Federal law restricts this drug to use by or on the order of a licensed veterinarian.

§ 520.88f Amoxicillin trihydrate tablets.

(a) *Specifications.* Each tablet contains amoxicillin trihydrate equivalent to 50, 100, 200, or 400 milligrams of amoxicillin.

(b) *Sponsor.* See Nos. 000031 or 000332 in § 510.600(c) of this chapter.

(c) *Conditions of use*—(1) *Dogs*—(i) *Amount.* 5 milligrams per pound of body weight twice a day.

(ii) *Indications for use.* Treatment of bacterial dermatitis due to *Staphylococcus aureus, Streptococcus* spp., *Staphylococcus* spp., and *Escherichia coli;* and soft tissue infections (abscesses, wounds, lacerations) due to *S. aureus, Streptococcus* spp., *E. coli, Proteus mirabilis,* and *Staphylococcus* spp.

(iii) *Limitations.* Use for 5 to 7 days or 48 hours after all symptoms have subsided. If no improvement is seen in 5 days, review diagnosis and change therapy. Federal law restricts this drug to use by or on the order of a licensed veterinarian.

(2) [Reserved]

§ 520.88g Amoxicillin trihydrate and clavulanate potassium film-coated tablets.

(a) *Specifications.* Each tablet contains amoxicillin trihydrate and clavulanate potassium, equivalent to either 50 milligrams of amoxicillin and 12.5 milligrams clavulanic acid, or 100 milligrams of amoxicillin and 25 milligrams clavulanic acid, or 200 milligrams amoxicillin and 50 milligrams clavulanic acid or 300 milligrams amoxicillin and 75 milligrams clavulanic acid.

(b) *Sponsor.* See No. 053571 in § 510.600(c) of this chapter.

(c) *Conditions of use*—(1) *Dogs*—(i) *Amount.* 6.25 milligrams (equivalent to 5 milligrams amoxicillin and 1.25 milligrams clavulanic acid) per pound of body weight twice daily.

(ii) *Indications for use.* Treatment of skin and soft tissue infections such as wounds, abscesses, cellulitis, superficial/juvenile and deep pyoderma due to susceptible strains of beta-lactamase (penicillinase) *Staphylococcus aureus,* nonbeta-lactamase *S. aureus, Staphylococcus* spp., *Streptococcus* spp., and *Escherichia coli.*

(iii) *Limitations.* Wounds, abscesses, cellulitis, and superficial/juvenile pyoderma: Treat for 5 to 7 days or for 48 hours after all signs have subsided. If no improvement is seen after 5 days of treatment, discontinue therapy and reevaluate diagnosis. Deep pyoderma may require treatment for 21 days; do not treat for more than 30 days. Not for use in dogs maintained for breeding. Federal law restricts this drug to use by or on the order of a licensed veterinarian.

(2) *Cats*—(i) *Amount.* 62.5 milligrams (1 milliliter) (50 milligrams amoxicillin and 12.5 milligrams clavulanic acid) twice daily.

(ii) *Indications for use.* Treatment of skin and soft tissue infections, such as wounds, abscesses and cellulitis/dermatitis due to susceptible strains of beta-lactamase (penicillinase) producing *S. aureus,* nonbeta-lactamase producing *S. aureus, Staphylococcus* spp., *Streptococcus* spp., *E. coli,* and *Pasteurella* spp. Also, treatment of urinary tract infections (cystitis) due to susceptible strains of *E. coli.*

(iii) *Limitations.* Skin and soft tissue infections: abscesses, cellulitis/dermatitis should be treated for 5 to 7 days or for 48 hours after all signs have subsided. If no response is seen after 3 days of treatment, therapy should be discontinued and diagnosis reevaluated. Urinary tract infections may require treatment for 10 to 14 days or longer. The maximum duration of treatment should not exceed 30 days. Safety of use in pregnant or breeding animals has not been established. Federal law restricts this drug to use by or on the order of a licensed veterinarian.

§ 520.88h Amoxicillin trihydrate and clavulanate potassium for oral suspension.

(a) *Specifications.* When reconstituted, each milliliter contains amoxicillin trihydrate equivalent to 50 milligrams of amoxicillin with clavulanate potassium equivalent to 12.5 milligrams of clavulanic acid.

(b) *Sponsor.* See No. 053571 in § 510.600(c) of this chapter.

(c) *Conditions of use*—(1) *Dogs*—(i) *Amount.* 6.25 milligrams (equivalent to 5 milligrams amoxicillin and 1.25 milligrams clavulanic acid) per pound of body weight twice daily.

(ii) *Indications for use.* Treatment of skin and soft tissue infections such as wounds, abscesses, cellulitis, superficial/juvenile and deep pyoderma due to susceptible strains of beta-lactamase (penicillinase) producing *Staphylococcus aureus,* nonbeta-lactamase *Staphylococcus aureus, Staphylococcus* spp., *Streptococcus* spp., and *Escherichia coli.*

(iii) *Limitations.* Administer for 5 to 7 days or 48 hours after all symptoms subsided. Deep pyoderma may require 21 days, not to exceed 30 days. If no improvement is seen in 5 days, discontinue therapy and reevaluate the case. Not for use in dogs maintained for breeding. Federal law restricts this drug to use by or on the order of a licensed veterinarian.

(2) *Cats*—(i) *Amount.* 62.5 milligrams (1 milliliter) (50 milligrams of amoxicillin and 12.5 milligrams clavulanic acid) twice daily.

(ii) *Indications for use.* Treatment of feline skin and soft tissue infections, such as wounds, abscesses and cellulitis/dermatitis due to susceptible strains of beta-lactamase (penicillinase) producing *S. aureus,* nonbeta-lactamase *S. aureus, Staphylococcus* spp., *Streptococcus* spp., *E. coli, Pasteurella multocida,* and *Pasteurella* spp.

(iii) *Limitations.* Administer 48 hours after all symptoms have subsided. If no improvement is seen after 3 days of treatment, discontinue therapy and reevaluate diagnosis. Maximum duration of treatment should not exceed 30 days. Not for use in cats maintained for breeding. Federal law restricts this drug to use by or on the order of a licensed veterinarian.

§ 520.90 Ampicillin oral dosage forms.

§ 520.90a Ampicillin capsules.

(a) *Specifications.* Each capsule contains 125 milligrams or 250 milligrams of ampicillin.

(b) *Sponsor.* See No. 000008 in § 510.600(c) of this chapter.

(c) *Conditions of use*—(1) *Dogs*—(i) *Amount.* 5 to 10 milligrams per pound of body weight, e.g., one 125 mg capsule per 14 to 25 pounds, given 2 to 4 times daily; for animals weighing 6 to 14 pounds, one capsule twice daily.

(ii) *Indications for use.* Treatment of urinary tract infections (cystitis) due to *Proteus* spp., hemolytic and nonhemolytic streptococci, beta hemolytic streptococci, and *Escherichia coli.* In upper respiratory tract infections tracheobronchitis (kennel cough), tonsillitis due to alpha and beta hemolytic streptococci, hemolytic positive staphylococci, *E. coli,* and *Proteus* spp. In infections associated with abscesses, lacerations, and wounds due to *Staphylococcus* spp. and *Streptococcus* spp.

(iii) *Limitations.* Bacteriologic studies to determine the causative organisms and their susceptibility to ampicillin should be performed. Use of the drug is contraindicated in animals with a history of an allergic reaction to any of the penicillins. Ampicillin is contraindicated in infections caused by penicillinase-producing organisms. Not for use in animals which are raised for food production. Federal law restricts this drug to use by or on the order of a licensed veterinarian.

(2) *Cats*—(i) *Amount.* 125 milligrams twice daily; in more acute conditions three times daily.

(ii) *Indications for use.* Treatment of respiratory tract infections (bacterial pneumonia) due to alpha and beta hemolytic streptococci, hemolytic positive staphylococci, *E. coli,* and *Proteus* spp. In infections associated with abscesses, lacerations, and wounds due to *Staphylococcus* spp. and *Streptococcus* spp.

(iii) *Limitations.* Bacteriologic studies to determine the causative organisms and their susceptibility to ampicillin should be performed. Use of the drug is contraindicated in animals with a history of an allergic reaction to any of the penicillins. Ampicillin is contraindicated in infections caused by penicillinase-producing organisms. Not for use in animals which are raised for food production. Federal law restricts this drug to use by or on the order of a licensed veterinarian.

§ 520.90b Ampicillin trihydrate tablets.

(a) *Specifications.* Each tablet contains ampicillin trihydrate equivalent to 50 or 100 milligrams of ampicillin.

(b) *Sponsor.* See No. 053571 in § 510.600(c) of this chapter.

(c) *Conditions of use. Dogs*—(1) *Amount.* 5 milligrams per pound of body weight, at 8-hour intervals, 1 to 2 hours prior to feeding, to be continued 36 to 48 hours after all symptoms have subsided. If no improvement is seen within 5 days, stop treatment, reevaluate diagnosis, and change therapy.

(2) *Indications for use.* Oral treatment of infections caused by susceptible organisms as follows: Upper respiratory infections, tonsillitis, and bronchitis due to *Streptococcus* spp., *Staphylococcus* spp., *Escherichia coli, Proteus mirabilis,* and *Pasteurella* spp., urinary tract infections (cystitis) due to *Streptococcus* spp., *Staphylococcus* spp., *E., coli, P. mirabilis,* and *Enterococcus* spp.; gastrointestinal infections due to *Staphylococcus* spp., *Streptococcus* spp., *Enterococcus* spp., and *E. coli.*; infections associated with abscesses, lacerations, and wounds caused by *Staphylococcus* spp., and *Streptococcus* spp.

(3) *Limitations.* Not for use in animals which have shown hypersensitivity to penicillin or for infections caused by penicillinase-producing organisms. Not for use in animals which are raised for food production. Federal law restricts this drug to use by or on the order of a licensed veterinarian.

§ 520.90c Ampicillin trihydrate capsules.

(a) *Specifications.* Each capsule contains ampicillin trihydrate equivalent to 125, 250, or 500 milligrams of ampicillin.

(b) *Sponsor.* See No. 053501 in § 510.600(c) of this chapter.

(c) *Conditions of use*—(1) *Dogs*—(i) *Amount.* 5 to 10 milligrams per pound of body weight two or three times daily. In severe or acute conditions, 10 milligrams per pound of body weight, three times daily. Administer 1 to 2 hours prior to feeding.

(ii) *Indications for use.* Treatment against strains of gram-negative and gram-positive organisms sensitive to ampicillin and associated with respiratory tract infections (tracheobronchitis and tonsillitis); urinary tract infections (cystitis); bacterial gastroenteritis; generalized infections (septicemia) associated with abscesses, lacerations, and wounds; and bacterial dermatitis.

(iii) *Limitations.* The drug may be given as an emergency measure; however, in vitro sensitivity tests on samples collected prior to treatment should be made. Ampicillin is contraindicated for use in infections caused by penicillinase-producing organisms and for use in animals known to be allergic to any of the penicillins. Not for use in animals raised for food production. Federal law restricts this drug to use by or on the order of a licensed veterinarian.

(2) *Cats*—(i) *Amount.* 10 to 30 milligrams per pound of body weight or three times daily. Administer 1 to 2 hours prior to feeding.

(ii) *Indications for use.* Treatment against strains of gram-negative and gram-positive organisms sensitive to ampicillin and associated with respiratory tract infections (bacterial pneumonia); urinary tract infections (cystitis); and generalized infections (septicemia) associated with abscesses, lacerations, and wounds.

(iii) *Limitations.* The drug may be given as an emergency measure; however, in vitro sensitivity tests on samples collected prior to treatment should be made. Ampicillin is contraindicated for use in infections caused by penicillinase-producing organisms and for use in animals known to be allergic to any of the penicillins. Not for use in animals raised for food production. Federal law restricts this drug to use by or on the order of a licensed veterinarian.

§ 520.90d Ampicillin trihydrate for oral suspension.

(a) *Specifications.* When reconstituted as directed, each milliliter contains ampicillin trihydrate equivalent to 25 milligrams of ampicillin.

(b) *Sponsor.* See No. 053501 in § 510.600(c) of this chapter.

(c) *Conditions of use*—(1) *Dogs*—(i) *Amount.* 5 to 10 milligrams per pound of body weight orally, 2 or 3 times daily, 1 to 2 hours prior to feeding. In severe or acute conditions, 10 milligrams per pound of body weight 3 times daily.

(ii) *Indications for use.* Treatment of respiratory tract infections (tracheobronchitis and tonsillitis) due to *Escherichia coli, Pseudomonas* spp., *Proteus* spp., *Staphylococcus* spp., and *Streptococcus* spp., urinary tract infections (cystitis) due to *E. coli, Staphylococcus* spp., *Streptococcus* spp., and *Proteus* spp.; bacterial gastroenteritis due to *E. coli*; generalized infections (septicemia) associated with abscesses, lacerations, and wounds, due to *Staphylococcus* spp. and *Streptococcus* spp.; bacterial dermatitis due to *Staphylococcus* spp., *Streptococcus* spp., *Proteus* spp., and *Pseudomonas* spp.

(iii) *Limitations.* Duration of treatment is usually 3 to 5 days. Continue treatment 48 hours after the animal's temperature has returned to normal and all other signs of infection have subsided. If no response is obtained within 3 to 5 days, reevaluate diagnosis and treatment. Appropriate laboratory tests should be conducted, including in vitro culturing and susceptibility tests on samples collected prior to treatment. Federal law restricts this drug to use by or on the order of a licensed veterinarian.

(2) *Cats*—(i) *Amount.* 10 to 30 milligrams per pound of body weight orally, 2 or 3 times daily, 1 to 2 hours prior to feeding.

(ii) *Indications for use.* Treatment of respiratory tract infections (bacterial pneumonia) due to *Staphylococcus* spp., *Streptococcus* spp., *E. coli*, and *Proteus* spp.; urinary tract infections (cystitis) due to *E. coli, Staphylococcus* spp., *Streptococcus* spp., *Proteus* spp., and *Corynebacterium* spp.; generalized infections (septicemia) associated with abscesses, lacerations, and wounds, due to *Staphylococcus* spp., *Streptococcus* spp., *Bacillus* spp., and *Pasteurella* spp.

(iii) *Limitations.* Duration of treatment is usually 3 to 5 days. Continue treatment 48 hours after the animal's temperature has returned to normal and all other signs of infection have subsided. If no response is obtained within 3 to 5 days, reevaluate diagnosis and treatment. Appropriate laboratory tests should be conducted, including in vitro culturing and susceptibility tests on samples collected prior to treatment. Federal law restricts this drug to use by or on the order of a licensed veterinarian.

§ 520.90e Ampicillin trihydrate soluble powder.

(a) *Specifications.* Each gram contains ampicillin trihydrate equivalent to 88.2 milligrams of ampicillin.

(b) *Sponsor.* See No. 053501 in § 510.600(c) of this chapter.

(c) *Related tolerances.* See § 556.40 of this chapter.

(d) *Conditions of use. Swine*—(1) *Amount.* 5 milligrams of ampicillin per pound of body weight twice daily, orally by gavage or in drinking water for up to 5 days.

(2) *Indications for use.* Oral treatment of porcine colibacillosis (*Escherichia coli*) and salmonellosis (*Salmonella* spp.) infections in swine up to 75 pounds of body weight, and bacterial pneumonia caused by *Pasteurella multocida, Staphylococcus* spp., *Streptococcus* spp., and *Salmonella* spp.

(3) *Limitations.* For use in swine only. Not for use in other animals which are raised for food production. Treated swine must not be slaughtered for food during treatment and for 24 hours following the last treatment. Federal law restricts this drug to use by or on the order of a licensed veterinarian.

§ 520.90f Ampicillin trihydrate boluses.

(a) *Specifications.* Each bolus contains ampicillin trihydrate equivalent to 400 milligrams of ampicillin.

(b) *Sponsor.* See No. 053501 in § 510.600(c) of this chapter for use as in paragraph (d)(1), 053571 for use as in paragraph (d)(2).

(c) *Related tolerances.* See § 556.40 of this chapter.

(d) *Conditions of use. Nonruminating calves*—(1) *Amount.* 5 milligrams per pound of body weight twice daily for up to 5 days.

(i) *Indications for use.* Oral treatment of colibacillosis caused by *Escherichia coli*, bacterial enteritis caused by *Salmonella* spp., and bacterial pneumonia caused by *Pasteurella* spp.

(ii) *Limitations.* Treated calves must not be slaughtered for food during treatment and for 15 days after the last treatment. Not for use in other animals raised for food production. Federal law restricts this drug to use by or on the order of a licensed veterinarian.

(2) *Amount.* 5 milligrams per pound of body weight twice daily not to exceed 4 days.

(i) *Indications for use.* Oral treatment of bacterial enteritis (colibacillosis) caused by *E. coli.*

(ii) *Limitations.* Treated calves must not be slaughtered for food during treatment and for 7 days after the last treatment. Not for use in other animals raised for food production. Federal law restricts this drug to use by or on the order of a licensed veterinarian.

4. New §§ 520.154, 520.154a, 520,154b, and 520.154c are added to read as follows:

§ 520.154 Bacitracin oral dosage forms.

§ 520.154a Soluble bacitracin methylene disalicylate.

(a) *Specifications.* Each pound of soluble powder contains the equivalent of 50 grams of bacitracin activity for use as in paragraph (d)(1) or (d)(2) of this section, or the equivalent of 200 grams of bacitracin activity for use as in paragraph (d)(3) of this section.

(b) *Sponsor.* See No. 046573 in § 510.600(c) of this chapter.

(c) *Related tolerances.* See § 556.70 of this chapter.

(d) *Conditions of use*—(1) *Growing turkeys*—(i) *Amount.* 400 milligrams per gallon in drinking water.

(ii) *Indications for use.* Aid in the control of transmissible enteritis complicated by organisms susceptible to bacitracin methylene disalicylate.

(iii) *Limitations.* Prepare a fresh solution daily.

(2) *Broiler chickens*—(i) *Amount.* 100 milligrams per gallon in drinking water.

(A) *Indications for use.* Aid in the prevention of necrotic enteritis caused by *Clostridium perfringens* susceptible to bacitracin methylene disalicylate.

(B) *Limitations.* Prepare a fresh solution daily.

(ii) *Amount.* 200 to 400 milligrams per gallon in drinking water.

(A) *Indications for use.* Aid in the control of necrotic enteritis caused by *C. perfringens* susceptible to bacitracin methylene disalicylate.

(B) *Limitations.* Prepare a fresh solution daily.

(3) *Swine*—(i) *Amount.* 1 gram per gallon in drinking water.

(ii) *Indications for use.* Treatment of swine dysentery associated with *Treponema hyodysenteriae.* Administer continuously for 7 days or until signs of dysentery disappear.

(iii) *Limitations.* Prepare a fresh solution daily. Treatment not to exceed 14 days. If symptoms persist after 4 to 5 days consult a veterinarian. Not to be given to swine that weigh more that 250 pounds.

§ 520.154b Soluble bacitracin methylene disalicylate and streptomycin sulfate oral powder.

(a) *Specifications.* Each gram contains 200 units of soluble bacitracin methylene disalicylate, streptomycin sulfate equivalent to 20 milligrams of streptomycin, and 850 milligrams of carob flour.

(b) *Sponsor.* See No. 011716 in § 510.600(c) of this chapter.

(c) *Conditions of use. Dogs*—(1) *Amount.* 1 level teaspoonful per 10 pounds of body weight three times daily, mixed in a small quantity of liquid or feed.

(2) *Indications for use.* Treatment of bacterial enteritis caused by pathogens susceptible to bacitracin and streptomycin such as *Escherichia coli, Proteus* spp., *Staphylococcus* spp., and *Streptococcus* spp., and for the symptomatic treatment of associated diarrhea.

(3) *Limitations.* If no improvement is noted in 2 to 3 days, diagnosis should be reevaluated. Federal law restricts this drug to use by or on the order of a licensed veterinarian.

§ 520.154c Bacitracin zinc soluble powder.

(a) *Specifications.* Each pound contains the equivalent of not less than 5 grams of bacitracin.

(b) *Sponsor.* See No. 010042 in § 510.600(c) of this chapter.

(c) *Related tolerances.* See § 556.70 of this chapter.

(d) *Conditions of use.* (1) *Broiler chickens*—(i) *Amount.* 100 milligrams per gallon in drinking water.

(A) *Indications for use.* Prevention of necrotic enteritis caused by *Clostridium perfringens* susceptible to bacitracin zinc.

(B) *Limitations.* Prepare a fresh solution daily.

(ii) *Amount.* 200 to 400 milligrams per gallon in drinking water.

(A) *Indications for use.* Control of necrotic enteritis caused by *Clostridium perfringens* susceptible to bacitracin zinc.

(B) *Limitations.* Prepare a fresh solution daily.

(2) *Growing quail*—(i) *Amount.* 500 milligrams per gallon in drinking water for 5 days followed by 165 milligrams per gallon in drinking water for 10 days.

(ii) *Indications for use.* Control of ulcerative enteritis caused by *Clostridium* spp. susceptible to bacitracin zinc.

(iii) *Limitations.* Prepare a fresh solution daily.

5. New §§ 520.390, 520.390a, 520.390b, and 520.390c are added to read as follows:

§ 520.390 Chloramphenicol oral dosage forms.

§ 520.390a Chloramphenicol tablets.

(a)(1) *Specifications.* Each tablet contains 100, 250, or 500 milligrams, 1 or 2.5 grams of chloramphenicol.

(2) *Sponsor.* In § 510.600(c) of this chapter: No. 000010 for 100-, 250-, and 500-milligram and 1-gram tablets; No. 000856 for 100-, 250-, and 500-milligram tablets; No. 017030 for 100-milligram tablets; No. 054273 for 100-, 250-, and 500-milligram and 1- and 2.5-gram tablets; No. 000069 for 250-milligram tablets.

(3) *Conditions of use. Dogs*—(i) *Amount.* 25 milligrams per pound of body weight every 6 hours.

(ii) *Indications for use.* Oral treatment of bacterial pulmonary infections, bacterial infections of the urinary tract, bacterial enteritis, and bacterial infections associated with canine distemper caused by susceptible organisms.

(iii) *Limitations.* Laboratory tests should be conducted, including in vitro culturing and susceptibility tests on samples collected prior to treatment. If no response to chloramphenicol therapy is obtained in 3 to 5 days, discontinue its use and review diagnosis. Not for animals which are raised for food production. Chloramphenicol products must not be used in meat-, egg-, or milk-producing animals. The length of time that residues persist in milk or tissues has not been determined. Because of potential antagonism, chloramphenicol should not be administered simultaneously with penicillin or streptomycin. Federal law restricts this drug to use by or on the order of a licensed veterinarian.

(b)(1) *Specifications.* Each tablet contains 50, 100, 250, or 500 milligrams, or 1 gram of chloramphenicol.

(2) *Sponsor.* See No. 050604 in § 510.600(c) of this chapter.

(3) *Conditions of use. Dogs*—(i) *Amount.* 25 milligrams per pound of body weight every 6 hours.

(ii) *Indications for use.* Oral treatment of bacterial gastroenteritis associated with bacterial diarrhea, bacterial pulmonary infections, and bacterial infections of the urinary tract caused by susceptible organisms.

(iii) *Limitations.* Laboratory tests should be conducted, including in vitro culturing and susceptibility tests on samples collected prior to treatment. If no response is obtained in 3 to 5 days, discontinue use and reevaluate diagnosis. Not for animals that are raised for food production. Chloramphenicol products should not be administered in conjunction with or 2 hours prior to the induction of general anesthesia with pentobarbital because of prolonged recovery. Chloramphenicol should not be administered to dogs maintained for breeding purposes. Because of potential antagonism, chloramphenicol should not be administered simultaneously with penicillin or streptomycin. Federal law restricts this drug to use by or on the order of a licensed veterinarian.

§ 520.390b Chloramphenicol capsules.

(a) *Specifications.* Each capsule contains 50, 100, 250, or 500 milligrams of chloramphenicol.

(b) *Sponsor.* (1) For chloramphenicol capsules containing 50, 100, 250, or 500 milligrams of chloramphenicol see Nos. 000069, 000172, 000185, and 027454 in § 510.600(c) of this chapter.

(2) For chloramphenicol capsules containing 100 or 250 milligrams of chloramphenicol see No. 058034 in § 510.600(c) of this chapter.

(c) *Conditions of use. Dogs*—(1) *Amount.* 25 milligrams per pound of body weight every 6 hours.

(2) *Indications for use.* Oral treatment of bacterial pulmonary infections, bacterial infections of the urinary tract, bacterial enteritis, and bacterial infections associated with canine distemper caused by susceptible organisms.

(3) *Limitations.* Laboratory tests should be conducted including in vitro culturing and susceptibility tests on samples collected prior to treatment. This product must not be used in meat-, egg-, or milk-producing animals. The length of time that residues persist in milk or tissues has not been determined. Federal law restricts this drug to use by or on the order of a licensed veterinarian.

§ 520.390c Chloramphenicol palmitate oral suspension.

(a) *Specifications.* Each milliliter contains chloramphenicol palmitate equivalent to 30 milligrams of chloramphenicol.

(b) *Sponsor.* See No. 000856 in § 510.600(c) of this chapter.

(c) *Conditions of use. Dogs*—(1) *Amount.* 25 milligrams per pound of body weight every 6 hours. If no response is obtained in 3 to 4 days, discontinue use and reevaluate diagnosis.

(2) *Indications for use.* Treatment of bacterial pulmonary infections, infections of the urinary tract, enteritis, and infections associated with canine distemper that are caused by organisms susceptible to chloramphenicol.

(3) *Limitations.* Not for use in animals that are raised for food production. Must not be used in meat-, egg-, or milk-producing animals. The length of time that residues persist in milk or tissues has not been determined. Federal law restricts this drug to use by or on the order of a licensed veterinarian.

6. New §§ 520.445, 520.445a, 520.445b, and 520.445c are added to read as follows:

§ 520.445 Chlortetracycline oral dosage forms.

§ 520.445a Chlortetracycline bisulfate/sulfamethazine bisulfate soluble powder.

(a) *Specifications.* Each pound contains chlortetracycline bisulfate equivalent to 102.4 grams of chlortetracycline hydrochloride with sulfamethazine bisulfate equivalent to 102.4 grams of sulfamethazine.

(b) *Sponsor.* See No. 010042 in § 510.600(c) of this chapter.

(c) *Related tolerances.* See §§ 556.150 and 556.670 of this chapter.

(d) *Conditions of use. Swine*—Used in drinking water as follows:

(1) *Amount.* 250 milligrams of chlortetracycline with 250 milligrams of sulfamethazine per gallon.

(2) *Indications for use.* Prevention and treatment of bacterial enteritis; aid in the reduction of the incidence of cervical

abscesses; aid in the maintenance of weight gains in the presence of bacterial enteritis and atrophic rhinitis.

(3) *Limitations.* Not to be used for more than 28 consecutive days; withdraw 15 days before slaughter; as sole source of chlortetracycline and sulfonamide.

§ 520.445b Chlortetracycline powder (chlortetracycline hydrochloride or chlortetracycline bisulfate).

(a) *Specifications.* Chlortetracycline powder contains not less than 15 milligrams per gram chlortetracycline hydrochloride, or chlortetracycline bisulfate equivalent to 25.6 or 102.4 grams per pound (56.4 or 225.6 milligrams per gram) chlortetracycline hydrochloride.

(b) *Sponsor.* See No. 053389 in § 510.600(c) of this chapter for conditions of use as in paragraphs (d)(3) and (d)(4) of this section; No. 010042 for conditions of uses as in paragraphs (d)(1) and (d)(2) of this section; No. 054273 for conditions of use as in paragraph (d)(5) of this section.

(c) *Related tolerances.* See § 556.150 of this chapter.

(d) *Conditions of use.* (1) Use as chlortetracycline hydrochloride or chlortetracycline bisulfate in drinking water as follows:

(i) *Chickens.* (A) *Amount.* 100 milligrams per gallon.

(*1*) *Indications for use.* Prevention of chronic respiratory disease (air-sac infection), bluecomb (nonspecific infectious enteritis).

(*2*) *Limitations.* Not to be used for more than 14 consecutive days; as sole source of chlortetracycline.

(B) *Amount.* 200 milligrams per gallon.

(*1*) *Indications for use.* Treatment of chronic respiratory disease (air-sac infection), bluecomb (nonspecific infectious enteritis); prevention of synovitis.

(*2*) *Limitations.* Not to be used for more than 14 consecutive days; as sole source of chlortetracycline.

(ii) *Growing chickens.* (A) *Amount.* 1,000 milligrams per gallon.

(B) *Indications for use.* Aid in the control of mortality due to fowl cholera.

(C) *Limitations.* Not for laying chickens; not to be used for more than 14 consecutive days; withdraw 24 hours prior to slaughter; as sole source of chlortetracycline.

(iii) *Chickens and turkeys.* (A) *Amount.* 400 milligrams per gallon.

(B) *Indications for use.* Control of synovitis.

(C) *Limitations.* Not for laying chickens; not to be used for more than 14 consecutive days; as sole source of chlortetracycline.

(iv) *Turkeys.* (A) *Amount.* 100 milligram per gallon.

(*1*) *Indications for use.* Prevention of bluecomb (nonspecific infectious enteritis, mud fever), infectious sinusitis, and hexamitiasis.

(*2*) *Limitations.* Not to be used for more than 14 consecutive days; as sole source of chlortetracycline.

(B) *Amount.* 200 milligrams per gallon.

(*1*) *Indications for use.* Treatment of bluecomb (nonspecific infectious enteritis, mud fever), infectious sinusitis, hexamitiasis, and prevention of synovitis.

(*2*) *Limitations.* Not to be used for more than 14 consecutive days; as sole source of chlortetracycline.

(2) Use as chlortetracycline hydrochloride in drinking water as follows:

(i) *Swine.* (A) *Amount.* 100 to 200 milligrams per gallon.

(*1*) *Indications for use.* Aid in prevention of bacterial enteritis.

(*2*) *Limitations.* Administer for not more than 46 days; do not slaughter animals for food within 24 hours of treatment; prepare a fresh solution daily; as sole source of chlortetracycline.

(B) *Amount.* 200 to 400 milligrams per gallon.

(*1*) *Indications for use.* Aid in prevention of bacterial pneumonia; for treatment of bacterial enteritis.

(*2*) *Limitations.* Administer for not more than 46 days; do not slaughter animals for food within 24 hours of treatment; prepare a fresh solution daily; as sole source of chlortetracycline.

(B) *Amount.* 400 to 600 milligrams per gallon.

(*1*) *Indications for use.* Treatment of bacterial pneumonia.

(*2*) *Limitations.* Administer for not more than 24 days; do not slaughter animals for food within 24 hours of treatment; prepare a fresh solution daily; as sole source of chlortetracycline.

(D) *Amount.* 1 gram per gallon (to provide approximately 10 milligrams per pound of body weight daily).

(*1*) *Indications for use.* Aid in the control and treatment of bacterial enteritis (scours) caused by *Escherichia coli* and bacterial pneumonia associated with *Pasteurella* supp., *Hemophilus* spp., and *Klebsiella* spp.

(*2*) *Limitations.* Prepare a fresh solution twice daily; as sole source of chlortetracycline; administer for not more than 45 days; do not slaughter animals for food within 5 days of treatment.

(ii) [Reserved]

(3) Use as chlortetracycline hydrochloride in a drench as follows:

(i) *Calves.* (A) *Amount.* 1 level tablespoonful per each 98 pounds of body weight every 12 hours to provide approximately 10 milligrams per pound of body weight daily.

(*1*) *Indications for use.* Aid in the control and treatment of bacterial enteritis (scours) caused by *Escherichia coli* and bacterial pneumonia (shipping fever) associated with *Pasteurella* spp., *Hemophilus* spp., and *Klebsiella* spp.

(*2*) *Limitations.* As sole source of chlortetracycline; administer for nor more than 5 days; do not slaughter animals for food within 24 hours of treatment.

(B) *Amount.* Two milligrams per pound of body weight.

(*1*) *Indications for use.* Treatment of bacterial pneumonia, bacterial diarrhea, and shipping fever.

(*2*) *Limitations.* Administer 2 milligrams per pound of body weight per day for not more than 5 days; do not slaughter animals for food within 3 days of treatment; prepare a fresh solution daily; as sole source of chlortetracycline.

(ii) [Reserved]

(4) The following uses of chlortetracycline hydrochloride in drinking water were reviewed by the National Academy of Sciences/National Research Council (NAS/NRC) and found effective; applications for these uses need not include the effectiveness data specified by § 514.111 of this chapter, but may require bioequivalency and safety information:

(i) *Chickens*—(A) *Amount.* 200 to 400 milligrams per gallon.

(*1*) *Indications for use.* Control of infectious synovitis caused by *Mycoplasma synoviae.*

(*2*) *Limitations.* Prepare fresh solution daily; as sole source of chlortetracycline; do not use for more than 14 days; do not slaughter animals for food within 24 hours of treatment; do not use in laying chickens.

(B) *Amount.* 400 to 800 milligrams per gallon.

(*1*) *Indications for use.* Control of chronic respiratory disease and air-sac infections caused by *M. gallisepticum* and *E. coli.*

(*2*) *Limitations.* Prepare fresh solution daily; as sole source of chlortetracycline; do not use for more than 14 days; do not slaughter animals for food within 24 hours of treatment; do not use in laying chickens.

(ii) *Growing turkeys*—(A) *Amount.* 400 milligrams per gallon.

(*1*) *Indications for use.* Control of infectious synovitis caused by *M. synoviae.*

(*2*) *Limitations.* Prepare fresh solution daily; as sole source of chlortetracycline; do not use for more

than 14 days; do not slaughter animals for food within 24 hours of treatment.

(B) *Amount.* 25 milligrams per pound of body weight daily.

(*1*) *Indications for use.* Control of complicating bacterial organisms associated with bluecomb (transmissible enteritis, coronaviral enteritis).

(*2*) *Limitations.* Prepare fresh solution daily; as sole source of chlortetracycline; do not use for more than 14 days; do not slaughter animals for food within 24 hours of treatment.

(iii) *Swine*—(A) *Amount.* 10 milligrams per pound body weight daily in divided doses.

(B) *Indications for use.* Control and treatment of bacterial enteritis (scours) caused by *E. coli* and *Salmonella* spp. and bacterial pneumonia associated with *Pasteurella* spp., *Hemophilus* spp., and *Klebsiella* spp.

(C) *Limitations.* Prepare fresh solution daily; as sole source of chlortetracycline; do not use for more than 5 days; do not slaughter animals for food within 5 days of treatment.

(iv) *Calves, beef cattle, and nonlactating dairy cattle*—(A) *Amount.* 10 milligrams per pound daily in divided doses.

(B) *Indications for use.* Control and treatment of bacterial enteritis (scours) caused by *E. coli* and *Salmonella* spp. and bacterial pneumonia (shipping fever complex) associated with *Pasteurella* spp., *Hemophilus* spp., and *Klebsiella* spp.

(C) *Limitations.* Prepare fresh solution daily; use as a drench; as sole source of chlortetracycline; do not use for more than 5 days; do not slaughter animals for food within 24 hours of treatment; do not use in lactating cattle.

§ 520.445c Chlortetracycline tablets and boluses.

(a) *Specifications.* Each tablet/bolus contains 25, 250, or 500 milligrams of chlortetracycline hydrochloride.

(b) *Sponsors.* See No. 000010 in § 510.600(c) of this chapter for the 250-milligram chlortetracycline hydrochloride bolus; see No. 010042 for the 25-milligram tablet and the 500 milligram bolus.

(c) *Related tolerances.* See § 556.150 of this chapter.

(d) *National Academy of Sciences/ National Research Council NAS/NRC) status.* The conditions of use specified in this section were NAS/NRC reviewed and found effective. Applications for these uses need not include effectiveness data as specified in § 514.111 of this chapter but may require bioequivalency and safety information.

(e) *Conditions of use—Calves*—(1) *Amount.* One 250 milligram bolus per 50 pounds of body weight twice a day for 3 to 5 days.

(i) *Indications for use.* Treatment of bacterial enteritis (scours) caused by *Escherichia coli* and bacterial pneumonia associated with *Pasteurella* spp., *Klesbsiella* spp., and *Hemophilus* spp.

(ii) *Limitations.* Administer bolus directly by mouth or crush and dissolve in milk or water for drenching or bucket feeding; if no improvement is noted after 3 days of treatment, consult a veterinarian; do not use for more than 5 days; do not administer within 24 hours of slaughter.

(2) *Amount.* One 25 milligram tablet for each 5 pounds of body weight every 12 hours daily for 3 to 5 days.

(i) *Indications for use.* Control and treatment of bacterial enteritis (scours) caused by *E. coli* and *Salmonella* spp. and bacterial pneumonia associated with *Pasteurella* spp., *Hemophilus* spp., and *Klebsiella* spp., susceptible to chlortetracycline.

(ii) *Limitations.* Administer tablet directly by mouth or crush and dissolve in water for drenching; if no improvement is noted after 3 days of treatment, consult a veterinarian; do not use for more than 5 days; when feeding milk or milk replacer, administration 1 hour before or 2 hours after feeding; do not administer within 24 hours of slaughter.

(3) *Amount.* One 500 milligram bolus per 100 pounds of body weight twice a day for 3 to 5 days.

(i) *Indications for use.* Treatment of bacterial enteritis (scours) caused by *E. coli* and *Salmonella* spp., and bacterial pneumonia associated with *Pasteurella* spp., *Hemophilus* spp., and *Klebsiella* spp., susceptible to chlortetracycline.

(ii) *Limitations.* Administer directly by mouth or crush and dissolve in water for drenching; if no improvement is noted after 3 days of treatment, consult a veterinarian; do not use for more than 5 days; do not administer within 24 hours of slaughter.

7. New § 520.608 is added to read as follows:

§ 520.608 Dicloxacillin sodium monohydrate capsules.

(a) *Specifications.* Each capsule contains dicloxacillin sodium monohydrate equivalent to 50, 100, 200, or 500 milligrams of dicloxacillin.

(b) *Sponsor.* See No. 000856 in § 510.600 (c) of this chapter.

(c) *Conditions of use. Dogs*—(1) *Amount.* 5 to 10 milligrams per pound of body weight, three times daily. In severe cases, up to 25 milligrams per pound of body weight three times daily.

(2) *Indications for use.* Treatment of pyoderma (pyogenic dermatitis) due to penicillinase-producing staphylococci sensitive to the drug.

(3) *Limitations.* For the treatment of dogs only. Continue treatment for 24 to 48 hours after the animal has become afebrile or asymptomatic. Administer 1 to 2 hours before feeding to ensure maximum absorption. Not for use in animals which are raised for food production. Federal law restricts this drug to use by or on the order of a licensed veterinarian.

8. New §§ 520.1130, 520.1130a, 520.1130b, and 520.1130c are added to read as follows:

§ 520.1130 Hetacillin oral dosage forms.

§ 520.1130a Hetacillin potassium capsules.

(a) *Specifications.* Each capsule contains hetacillin potassium equivalent to 50, 100, or 200 milligrams of ampicillin.

(b) *Sponsor.* See No. 000856 in § 510.600(c) of this chapter.

(c) *Conditions of use.* (1) *Dogs*—(i) *Amount.* 5 milligrams per pound of body weight, twice daily. In severe infections, up to three times daily, or up to 10 milligrams per pound of body weight twice daily. For stubborn urinary tract infections, up to 20 milligrams per pound of body weight twice daily.

(ii) *Indications for use.* Treatment against strains of organisms sensitive to hetacillin potassium and associated with respiratory tract infections, urinary tract infections, gastrointestinal infections, skin infections, soft tissue infections, and postsurgical infections.

(iii) *Limitations.* For use in dogs and cats only. Continue treatment for 48 to 72 hours after the animal has become afebrile or asymptomatic. Administer 1 to 2 hours prior to feeding to ensure maximum absorption. In stubborn infections, therapy may be required for several weeks. Not for use in animals raised for food production. Federal law restricts this drug to use only by or on the order of a licensed veterinarian.

(2) *Cats*—(i) *Amount.* Administer 50 milligrams twice daily.

(ii) *Indications for use.* Treatment against strains of organisms sensitive to hetacillin potassium and associated with respiratory tract infections, urinary tract infections, gastrointestinal infections, skin infections, soft tissue infections, and postsurgical infections.

(3) *Limitations.* For use in dogs and cats only. Continue treatment for 48 to 72 hours after the animal has become afebrile or asymptomatic. Administer in

a fasting state to ensure maximum absorption. In stubborn infections, therapy may be required for several weeks. Not for use in animals raised for food production. Federal law restricts this drug to use only by or on the order of a licensed veterinarian.

§ 520.1130b Hetacillin potassium oral suspension.

(a) *Specifications.* Each milliliter contains hetacillin potassium equivalent to 50 milligrams of ampicillin.

(b) *Sponsor.* See No. 000856 in § 510.600(c) of this chapter.

(c) *Conditions of use*—(1) *Dogs*—(i) *Amount.* 5 milligrams per pound of body weight twice daily. In severe infections, up to three times daily, or up to 10 milligrams per pound of body weight twice daily. For stubborn urinary tract infections, up to 20 milligrams per pound of body weight twice daily.

(ii) *Indications for use.* Treatment against strains of organisms susceptible to hetacillin potassium and associated with respiratory tract infections, urinary tract infections, gastrointestinal infections, skin infections, soft-tissue infections, and postsurgical infections.

(iii) *Limitations.* For use in dogs only. Not for use in animals raised for food production. Continue treatment 48 to 72 hours after the animal has become afebrile or asymptomatic. Administer 1 to 2 hours prior to feeding to ensure maximum absorption. In stubborn infections, therapy may be required for several weeks. Federal law restricts this drug to use by or on the order of a licensed veterinarian.

(2) *Cats*—(i) *Amount.* 50 milligrams twice daily.

(ii) *Indications for use.* Treatment against strains of organisms susceptible to hetacillin potassium and associated with respiratory tract infections, urinary tract infections, gastrointestinal infections, skin infections, soft-tissue infections, and postsurgical infections.

(iii) *Limitations.* For use in cats only. Not for use in animals raised for food production. Continue treatment 48 to 72 hours after the animal has become afebrile or asymptomatic. Administer 1 to 2 hours prior to feeding to ensure maximum absorption. In stubborn infections, therapy may be required for several weeks. Federal law restricts this drug to use by or on the order of a licensed veterinarian.

§ 520.1130c Hetacillin potassium tablets.

(a) *Specifications.* Each tablet contains hetacillin potassium equivalent to 50, 100, or 200 milligrams of ampicillin.

(b) *Sponsor.* See No. 000856 in § 510.600(c) of this chapter.

(c) *Conditions of use*—(1) *Dogs*—(i) *Amount.* 5 milligrams per pound of body weight twice daily. In severe infections, up to three times daily, or up to 10 milligrams per pound of body weight twice daily. For stubborn urinary tract infections, up to 20 milligrams per pound of body weight twice daily.

(ii) *Indications for use.* Oral treatment against strains of organisms sensitive to hetacillin potassium and associated with respiratory tract infections, urinary tract infections, gastrointestinal infections, skin infections, soft tissue infections, and postsurgical infections.

(iii) *Limitations.* For use in dogs and cats only. Continue treatment for 48 to 72 hours after the animal has become afebrile or asymptomatic. Administer 1 to 2 hours prior to feeding to ensure maximum absorption. In stubborn infections, therapy may be required for several weeks. Not for use in animals which are raised for food production. Federal law restricts this drug to use by or on the order of a licensed veterinarian.

(2) *Cats*—(i) *Amount.* 50 milligrams twice daily.

(ii) *Indications for use.* Treatment against strains of organisms sensitive to hetacillin potassium and associated with respiratory tract infections, urinary tract infections, gastrointestinal infections, skin infections, soft tissue infections, and postsurgical infections.

(iii) *Limitations.* For use in dogs and cats only. Continue treatment for 48 to 72 hours after the animal has become afebrile or asymptomatic. Administer 1 to 2 hours prior to feeding to ensure maximum absorption. In stubborn infections, therapy may be required for several weeks. Not for use in animals which are raised for food production. Federal law restricts this drug to use by or on the order of a licensed veterinarian.

9. New § § 520.1696, 520.1696a, 520.1696b, 520.1696c, and 520.1696d are added to read as follows:

§ 520.1696 Penicillin oral dosage forms.

§ 520.1696a Buffered penicillin powder, penicillin powder with buffered aqueous diluent.

(a) *Specifications.* When reconstituted, each milliliter contains penicillin G procaine equivalent to 20,000, 25,000, 40,000, 50,000, 80,000, or 100,000 units of penicillin G.

(b) *Sponsor.* [Reserved]

(c) *Related tolerances.* See § 556.510 of this chapter.

(d) *Conditions of use. Chickens*—It is used in drinking water as follows:

(1) *Amount.* 100,000 units per gallon.

(i) *Indications for use.* Treatment of chronic respiratory disease (air-sac infection) and bluecomb (nonspecific infectious enteritis).

(ii) *Limitations.* As penicillin G procaine; not for use in laying chickens; prepare fresh solution daily; withdraw 1 day before slaughter; as sole source of penicillin.

(2) *Amount.* 50,000 to 100,000 units per gallon.

(i) *Indications for use.* Prevention of chronic respiratory disease (air-sac infection) and bluecomb (nonspecific infectious enteritis).

(ii) *Limitations.* As penicillin G procaine; not for use in laying chickens; prepare fresh solution daily; withdraw 1 day before slaughter; as sole source of penicillin.

§ 520.1696b Penicillin G potassium in drinking water.

(a) *Specifications.* When reconstituted, each milliliter contains penicillin G potassium equivalent to 20,000, 25,000, 40,000, 50,000, 80,000, or 100,000 units of penicillin G.

(b) *Sponsor.* See No. 053501 in § 510.600(c) of this chapter.

(c) *Conditions of use. Turkeys*—(1) *Amount.* 1,500,000 units per gallon drinking water for 5 days.

(2) *Indications for use.* Treatment of erysipelas caused by *Erysipelothrix insidiosa.*

(3) *Limitations.* Prepare concentrated stock solution for use with medication proportioners fresh every 24 hours. Prepare recommended use levels for gravity flow watering system fresh every 12 hours. For best results, treatment should be started at the first sign of infection. Discontinue treatment at least 1 day prior to slaughter. Not for use in turkeys producing eggs for human consumption.

§ 520.1696c Penicillin V Potassium for oral solution.

(a) *Specifications.* When reconstituted, each milliliter contains 25 milligrams (40,000 units) of penicillin V.

(b) *Sponsor.* See No. 050604 in § 510.600(c) of this chapter.

(c) *National Academy of Sciences/National Research Council (NAS/NRC) status.* The conditions of use were NAS/NRC reviewed and found effective. Applications for these uses need not include effectiveness data as specified by § 514.111 of this chapter, but many require bioequivalency and safety information.

(d) *Conditions of use. Dogs and cats*—(1) *Amount.* 10 to 15 milligrams per pound of body weight every 6 to 8 hours.

(2) *Indications for use.* Treatment of respiratory, urogenital, skin, and soft tissue infections and septicemia caused by pathogens susceptible to penicillin V potassium.

(3) *Limitations.* Administer orally 1 to 2 hours prior to feeding for maximum absorption. Federal law restricts this drug to use by or on the order of a licensed veterinarian.

§ 520.1696d Penicillin V potassium tablets.

(a) *Specifications.* Each tablet contains penicillin V potassium equivalent to 125 milligrams (200,000 units) or 250 milligrams (400,000 units) of penicillin V.

(b) *Sponsor.* See No. 050604 in § 501.600(c) of this chapter.

(c) *National Academy of Sciences/ National Research Council (NAS/NRC) status.* These conditions of use were NAS/NRC reviewed and found effective. Applications for these uses need not include effectiveness data as specified by § 514.111 of this chapter, but may require bioequivalency and safety information.

(d) *Conditions of use. Dogs and Cats*—(1) *Amount.* 10 to 15 milligrams per pound of body weight every 6 to 8 hours.

(2) *Indications for use.* Treatment of respiratory, urogenital, skin and soft tissue infections and septicemia caused by pathogens susceptible to penicillin V potassium.

(3) *Limitations.* Administer orally 1 to 2 hours prior to feeding for maximum absorption. Federal law restricts this drug to use by or on the order of a licensed veterinarian.

10. New § § 520.2158, 520.2158a, 520.2158b, and 520.2158c are added to read as follows:

§ 520.2158 Streptomycin/ dihydrostreptomycin oral dosage forms.

§ 520.2158a Streptomycin sulfate oral solution.

(a) *Specifications.* Solution containing 25 percent streptomycin sulfate.

(b) *Sponsor.* See No. 033008 in § 510.600(c) of this chapter.

(c) *Related tolerances.* See § 556.610 of this chapter.

(d) *Conditions of use.* Use in drinking water as follows:

(1) *Calves*—(i) *Amount.* 0.5 to 1.5 grams per gallon.

(ii) *Indications for use.* Treatment of bacterial diarrhea (scours) of calves.

(iii) *Limitations.* Administer for not more than 5 days; prepare fresh solution daily; withdraw 2 days before slaughter; as sole source of streptomycin.

(2) *Chickens*—(i) *Amount.* 0.5 to 1.5 grams per gallon.

(ii) *Indications for use.* Treatment of chronic respiratory disease (air-sac infection); maintenance of weight gains during periods of stress; treatment of bluecomb (nonspecific infectious enteritis).

(iii) *Limitations.* Administer for not more than 5 days; not for use in laying chickens; prepare fresh solution daily; withdraw 4 days before slaughter; as sole source of streptomycin.

(3) *Swine*—(i) *Amount.* 0.5 to 1.5 grams per gallon.

(ii) *Indications for use.* Treatment of bacterial enteritis (scours) in swine.

(iii) *Limitations.* Administer for not more than 4 days; prepare fresh solution daily; as sole source of streptomycin.

§ 520.2158b Dihydrostreptomycin tablets.

(a) *Specifications.* Each tablet contains 37.5 milligrams dihydrostreptomycin (as the sulfate) with 375 milligrams chlorhexidine dihydrochloride.

(b) *Sponsor.* See No. 000856 in § 510.600(C) of this chapter.

(c) *Related tolerances.* See §§ 556.120 and 556.200 of this chapter.

(d) *Conditions of use. Calves*—(1) *Amount.* 150 milligrams of dihydrostreptomycin and 1.5 grams of chlorhexidine dihydrochloride per 100 pounds of body weight per day.

(2) *Indications for use.* Treatment of bacterial scours in calves.

(3) *Limitations.* Administer orally once a day for 5 days; withdraw 3 days before slaughter.

§ 520.2158c Dihydrostreptomycin oral suspension.

(a) *Specifications.* Each milliliter contains 1.25 milligrams dihydrostreptomycin (as the sulfate) with 12.5 milligrams chlorhexidine dihydrochloride.

(b) *Sponsor.* See No. 000856 in § 510.600(c) of this chapter.

(c) *Related tolerances.* See §§ 556.120 and 556.200 of this chapter.

(d) *Conditions of use—Calves*—(1) *Amount.* 150 milligrams of dihydrostreptomycin and 1.5 grams of chlorhexidine dihydrochloride per 100 pounds of body weight per day.

(2) *Indications for use.* Treatment of bacterial scours in calves.

(3) *Limitations.* Administer orally once a day for 5 days; withdraw 3 days before slaughter.

11. New §§ 520.2345, 520.2345a, 520.2345b, 520.2345c, 520.2345d, 520.2345e, 520.2345f, 520.2345g, and 520.2345h are added to read as follows:

§ 520.2345 Tetracycline oral dosage forms.

§ 520.2345a Tetracycline hydrochloride capsules.

(a) *Specifications.* Each capsule contains 50, 100, 125, 250, or 500 milligrams of tetracycline hydrochloride.

(b) *Sponsor.* See § 510.600(c) of this chapter for identification of the sponsors:

(1) To Nos. 000009 and 000693: 250 milligrams per capsule.

(2) To No. 000069: 125, 250, and 500 milligrams per capsule.

(3) To No. 000115: 50, 100, 250, and 500 milligrams per capsule.

(4) To No. 000172: 50, 100, 125, 250, and 500 milligrams per capsule.

(c) *Conditions of use. Dogs*—(1) *Amount.* 25 milligrams per pound of body weight per day in divided doses every 6 hours.

(2) *Indications for use.* Treatment of infections caused by organisms sensitive to tetracycline hydrochloride, such as bacterial gastroenteritis due to *E. coli* and urinary tract infections due to *Staphylococcus* spp. and *E. coli.*

(3) *Limitations.* Administer orally; continue treatment until symptoms of the disease have subsided and the temperature is normal for 48 hours; not for use in animals raised for food production; Federal law restricts this drug to use by or on the order of a licensed veterinarian.

§ 520.2345b Tetracycline tablets.

(a) *Specifications.* Each tablet contains 100, 250, or 500 milligrams of tetracycline (as the hydrochloride).

(b) *Sponsor.* For 100, 250, or 500 milligrams per tablet, see No. 000069 in § 510.600(c) of this chapter. For 250 milligrams per tablet, see No. 000009 in § 510.600(c) of this chapter.

(c) *Conditions of use—Dogs*—(1) *Amount.* 25 milligrams per pound of body weight per day in divided doses every 6 hours.

(2) *Indications for use.* Treatment of infections caused by organisms sensitive to tetracycline hydrochloride, such as bacterial gastroenteritis due to *E. coli* and urinary tract infections due to *Staphylococcus* spp. and *E. coli.*

(3) *Limitations.* Administer orally; continue treatment until symptoms of the disease have subsided and temperature is normal for 48 hours; not for use in animals raised for food production; Federal law restricts this drug to use by or on the order of a licensed veterinarian.

§ 520.2345c Tetracycline boluses.

(a) *Specifications.* Each bolus contains 500 milligrams of tetracycline (as the hydrochloride).

(b) *Sponsors.* See No. 010042 in § 510.600(c) of this chapter for use as in paragraph (d)(1) of this section. See No. 000009 in § 510.600(c) of this chapter for use as in paragraph (d)(2) of this section.

(c) *Related tolerances.* See § 556.720 of this chapter.

(d) *Conditions of use—Calves*—(1) *Amount.* 10 milligrams per pound of body weight per day in divided doses.

(i) *Indications for use.* Control and treatment of bacterial enteritis (scours) caused by *E. coli* and bacterial pneumonia caused by *Pasteurella* spp., *Hemophilus* spp., and *Klebsiella* spp.

(ii) *Limitations.* Administer orally for 3 to 5 days; do not slaughter animals for food within 14 days of treatment; use as sole source of tetracycline.

(iii) *National Academy of Sciences/National Research Council (NAS/NRC) status.* The conditions of use specified in paragraph (d)(1)(i) of this section were NAS/NRC reviewed and found effective. Applications for these uses need not include effectiveness data as specified in § 514.111 of this chapter, but may require bioequivalency and safety information.

(2) *Amount.* 10 milligrams per pound of body weight per day in two divided doses.

(i) *Indications for use.* Treatment of bacterial pneumonia caused by organisms susceptible to tetracycline, bacterial enteritis caused by *E. coli*, and salmonella organisms susceptible to tetracycline.

(ii) *Limitations.* Administer orally for not more than 5 days; do not slaughter animals for food within 12 days of treatment; use as sole source of tetracycline.

§ 520.2345d Tetracycline soluble powder.

(a) *Specifications.* Each gram of powder contains not less than 15 milligrams of tetracycline as tetracycline hydrochloride.

(b) *Sponsor.* See § 510.600(c) of this chapter for identification of the sponsors as listed in paragraph (e) of this section.

(c) *Related tolerances.* See § 556.720 of this chapter.

(d) *National Academy of Sciences/National Research Council (NAS/NRC) status.* The conditions of use specified in paragraphs (e)(1)(iii), (e)(3)(iv), and (e)(4)(iii) of this section were NAS/NRC reviewed and found effective. Applications for these uses need not include effectiveness data as specified in § 514.111 of this chapter, but may require bioequivalency and safety information.

(e) *Conditons of use*—(1) Calf drinking water—(i) *Amount.* 100 to 200 milligrams per gallon.

(A) *Indications for use.* Aid in prevention of bacterial diarrhea, bacterial pneumonia, and shipping fever (hemorrahagic septicemia).

(B) *Limitations.* Administer for not more than 5 days; do not slaughter animals for food purposes within 5 days of treatment; prepare a fresh solution daily; as sole source of tetracycline.

(C) *Sponsor.* See Nos. 000009, 000069, and 047864 in § 510.600(c) of this chapter.

(ii) *Amount.* 200 to 400 milligrams per gallon.

(A) *Indications for use.* Treatment of bacterial diarrhea, bacterial pneumonia, and shipping fever (hemorrahgic septicemia).

(B) *Limitations.* Administer for not more than 5 days; do not slaughter animals for food within 5 days of treatment; prepare fresh solution daily; as sole source of tetracycline.

(C) *Sponsor.* See Nos. 000009, 000069, and 047864 in § 510.600(c) of this chapter.

(iii) *Amount.* 10 milligrams per pound body weight daily.

(A) *Indications for use.* Control and treatment of bacterial enteritis (scours) caused by *Escherichia coli* and bacterial pneumonia (shipping fever complex) associated with *Pasteurella* spp., *Hemophilus* spp., and *Klebsiella* spp., susceptible to tetracycline.

(B) *Limitations.* Administer for 3 to 5 days; do not slaughter animals for food within 5 days of treatment; as sole source of tetracycline.

(C) *Sponsor.* See No. 054273 in § 510.600(c) of this chapter.

(2) *Newborn pigs*—(i) *Amount.* 52 milligrams per day in water or milk.

(ii) *Indications for use.* Treatment of bacterial enteritis and bacterial pneumonia.

(iii) *Limitations.* Administer for not more than 3 days; do not slaughter animals for food within 4 days of treatment; prepare a fresh solution daily; as sole source of tetracycline.

(iv) *Sponsor.* See Nos. 000009, 000069, and 047864 in § 510.600(c) of this chapter.

(3) *Swine drinking water*—(i) *Amount.* 100 to 200 milligrams per gallon.

(A) *Indications for use.* Aid in prevention of bacterial enteritis.

(B) *Limitations.* Do not slaughter animals for food within 4 days of treatment; prepare a fresh solution daily; as sole source of tetracycline.

(C) *Sponsor.* See Nos. 000009, 000069, and 047864 in § 510.600(c) of this chapter.

(ii) *Amount.* 200 to 400 milligrams per gallon.

(A) *Indications for use.* Aid in prevention of bacterial pneumonia; for treatment of bacterial enteritis.

(B) *Limitations.* Do not slaughter animals for food within 4 days of treatment; prepare a fresh solution daily; as sole source of tetracycline.

(C) *Sponsor.* See Nos. 000009, 000069, and 047864 in § 510.600(c) of this chapter.

(iii) *Amount.* 400 milligrams per gallon.

(A) *Indications for use.* Treatment of bacterial pneumonia.

(B) *Limitations.* Do not slaughter animals for food within 4 days of treatment; prepare a fresh solution daily; as sole source of tetracycline.

(C) *Sponsor.* See Nos. 000009, 000069, and 047864 in § 510.600(c) of this chapter.

(iv) *Amount.* 10 milligrams per pound body weight daily.

(A) *Indications for use.* Control and treatment of bacterial enteritis (scours) caused by *E. coli* and bacterial pneumonia associated with *Pasteurella* spp., *Hemophilus* spp., and *Klebsiella* spp., susceptible to tetracycline.

(B) *Limitations.* Administer for 3 to 5 days; do not slaughter animals for food within 4 days of treatment; as sole source of tetracycline.

(C) *Sponsor.* See No. 054273 in § 510.600(c) of this chapter.

(4) *Turkey and chicken drinking water*—(i) *Amount.* 100 to 200 milligrams per gallon.

(A) *Indications for use.* Aid in prevention of chronic respiratory disease (air-sac infection), hexamitiasis, bluecomb (nonspecific enteritis), infectious sinusitis, and synovitis.

(B) *Limitations.* Administer for not more than 21 days; do not slaughter for food within 4 days of treatment; not for use in chickens and turkeys producing eggs for human consumption; prepare fresh solution daily; as sole source of tetracycline.

(C) *Sponsor.* See Nos. 000009, 000069, and 047864 in § 510.600(c) of this chapter.

(ii) *Amount.* 200 to 400 milligrams per gallon.

(A) *Indications for use.* Treatment of chronic respiratory disease (air-sac infection), hexamitiasis, bluecomb (nonspecific enteritis), infectious sinusitis, and synovitis.

(B) *Limitations.* Administer for not more than 21 days; do not slaughter for food within 4 days of treatment; not for use in chickens and turkeys producing eggs for human consumption; prepare a fresh solution daily; as sole source of tetracycline.

(C) *Sponsor.* See Nos. 000009, 000069, and 047864 in § 510.600(c) of this chapter.

(iii) *Amount.* 1,000 milligrams per gallon.

(A) *Indications for use—(1) Chickens.* Control of chronic respiratory disease and air-sac infection caused by *Mycoplasma gallisepticum* and *Escherichia coli*; infectious synovitis caused by *M synoviae* susceptible to tetracycline.

(2) *Turkeys.* Control of infectious synovitis caused by *M. synoviae* and bluecomb (transmissible enteritis, coronaviral enteritis) caused by complicating bacterial organisms susceptible to tetracycline.

(B) *Limitations.* Administer 25 milligrams per pound of body weight daily for not more than 14 consecutive days; do not slaughter for food within 4 days of treatment; not for use in chickens and turkeys producing eggs for human consumption; prepare a fresh solution daily; as sole source of tetracycline.

(C) *Sponsor.* See No. 054273 in § 510.600(c) of this chapter.

(iv) *Amount.* 2,957 milligrams per gallon.

(A) *Indications for use—Chickens.* Control of chronic respiratory disease and air-sac infection caused by *M. gallisepticum* and *E. coli*; infectious synovitis caused by *M. synoviae* susceptible to tetracycline.

(B) *Limitations.* Administer in two divided doses to provide 25 milligrams per pound of body weight daily for 7 to 14 days; do not slaughter for food within 4 days of treatment; not for use in chickens producing eggs for human consumption; prepare a fresh solution daily; as sole source of tetracycline.

(C) *Sponsor.* See No. 058752 in § 510.600(c) of this chapter.

§ 520.2345e Tetracycline oral liquid.

(a) *Specifications.* Each milliliter contains the equivalent of either 25 or 100 milligrams of tetracycline hydrochloride.

(b) *Sponsor.* See No. 000069, in § 510.600(c) of this chapter for use of 25 or 100 milligrams per milliliter liquid in dogs as in paragraph (c)(1) of this section; see No. 000009 in § 510.600(c) of this chapter for use of 100 milligrams per milliliter liquid in dogs and cats as in paragraph (c)(2).

(c) *Conditions of use—(1) Dogs—(i) Amount.* 25 milligrams per pound of body weight per day in divided doses every 6 hours.

(ii) *Indications for use.* Treatment of infections caused by organisms sensitive to tetracycline hydrochloride, such as bacterial gastroenteritis due to *Escherichia coli* and urinary tract infections due to *Staphylococcus* spp. and *E. coli.*

(iii) *Limitations.* Administer orally; continue treatment until symptoms have subsided and the temperature is normal for 48 hours; not for use in animals which are raised for food production; Federal law restricts this drug to use by or on the order of a licensed veterinarian.

(iv) *National Academy of Sciences/National Research Council (NAS/NRC) status.* These conditions were NAS/NRC reviewed and found effective. Applications for these uses need not include effectiveness data as specified by § 514.111 of this chapter, but may require bioequivalency and safety information.

(2) *Dogs and cats—(i). Amount.* 25 milligrams per pound of body weight per day in divided doses every 6 hours.

(ii) *Indications for use.* Treatment of infections caused by organisms susceptible to tetracycline hydrochloride, such as bacterial gastroenteritis due to *E. coli* and urinary tract infections due to *Staphylococcus* spp. and *E. coli.*

(iii) *Limitations.* Administer orally; continue treatment until the temperature has been normal for 48 hours; not for use in food-producing animals; Federal law restricts this drug to use by or on the order of a licensed veterinarian.

§ 520.2345f Tetracycline phosphate complex and sodium novobiocin capsules.

(a) *Specifications.* Each capsule contains the equivalent of 60 milligrams of tetracycline hydrochloride and 60 milligrams of novobiocin.

(b) *Sponsor.* No. 000009 in § 510.600(c) of this chapter.

(c) *Conditions of use. Dogs—(1) Amount.* 10 milligrams of each antibiotic per pound of body weight (1 capsule for each 6 pounds) every 12 hours.

(2) *Indications for use.* Treatment of acute or chronic canine respiratory infections such as tonsillitis, bronchitis, and tracheobronchitis when caused by pathogens susceptible to tetracycline and/or novobiocin, such as *Staphylococcus* spp. and *Escherichia coli.*

(3) *Limitations.* Continue treatment for at least 48 hours after the temperature has returned to normal and all evidence of infection has disappeared. As with all antibiotics, appropriate in vitro culturing and susceptibility tests of samples taken before treatment should be conducted. Federal law restricts this drug to use by or on the order of a licensed veterinarian.

§ 520.2345g Tetracycline hydrochloride and sodium novobiocin tablets.

(a) *Specifications.* Each tablet contains the equivalent of 60 milligrams of tetracycline hydrochloride and 60 milligrams of novobiocin, or 180 milligrams of tetracycline hydrochloride and 180 milligrams of novobiocin.

(b) *Sponsor.* No. 000009 in § 510.600(c) of this chapter.

(c) *Conditions of use. Dogs—(1) Amount.* 10 milligrams of each antibiotic per pound of body weight (one single-strength tablet for each 6 pounds or one triple-strength tablet for each 18 pounds).

(2) *Indications for use.* Treatment of acute or chronic canine respiratory infections such as tonsillitis, bronchitis, and tracheobronchitis when caused by pathogens susceptible to tetracycline and/or novobiocin, such as *Staphylococcus* spp. and *Escherichia coli.*

(3) *Limitations.* Continue treatment for at least 48 hours after the temperature has returned to normal and all evidence of infection has disappeared. As with all antibiotics, appropriate in vitro culturing and susceptibility tests of samples taken before treatment should be conducted. Federal law restricts this drug to use by or on the order of a licensed veterinarian.

§ 520.2345h Tetracycline hydrochloride, sodium novobiocin, and prednisolone tablets.

(a) *Specifications.* Each tablet contains the equivalent of 60 milligrams of tetracycline hydrochloride, 60 milligrams of novobiocin, and 1.5 milligrams of prednisolone or 180 milligrams of tetracycline hydrochloride, 180 milligrams of novobiocin, and 4.5 milligrams of prednisolone.

(b) *Sponsor.* See No. 000009 in § 510.600(c) of this chapter.

(c) *Conditions of use. Dogs—(1) Amount.* 10 milligrams of each antibiotic and 0.25 milligram of prednisolone per pound of body weight (one single-strength tablet for each 6 pounds or one triple-strength tablet for each 18 pounds) every 12 hours for 48 hours. Treatment is to be continued with novobiocin and tetracycline alone at the same dose schedule for an additional 3 days or longer as needed.

(2) *Indications for use.* Treatment of acute and chronic canine respiratory infections such as tonsillitis, bronchitis, and tracheobronchitis when caused by pathogens susceptible to tetracycline and/or novobiocin, such as *Staphylococcus* spp. and *Escherichia coli*, when it is necessary to initially

reduce the severity of associated clinical signs.

(3) *Limitations.* As with all antibiotics, appropriate in vitro culturing and susceptibility tests of samples taken before treatment should be conducted. Administer for 48 hours only. Continue treatment if needed with tetracycline/novobiocin alone. The product is contraindicated in animals with tuberculosis, hyperadrenocorticalism, or peptic ulcers. Clinical and experimental data have demonstrated that corticosteroids administered orally or parenterally to animals may induce the first stage of parturition when administered during the last trimester of pregnancy and may precipitate premature parturition followed by dystocia, fetal death, retained placenta, and metritis. Federal law restricts this drug to use by or on the order of a licensed veterinarian.

PART 522—[AMENDED]

Part 522 is amended as follows:

12. The authority citation for 21 CFR Part 522 continues to read as follows:

Authority: Sec. 512 of the Federal Food, Drug, and Cosmetic Act (21 U.S.C. 360b).

13. The heading for part 522 is revised to read as follows:

PART 522—IMPLANTATION OR INJECTABLE DOSAGE FORM NEW ANIMAL DRUGS

14. New §§ 522.88, 522.90, 522.90a, 522.90b, and 522.90c are added to read as follows:

§ 522.88 Sterile amoxicillin trihydrate for suspension.

(a) (1) *Specifications.* Each vial contains 3 grams of amoxicillin as the trihydrate. The powder is reconstituted with sterile water for injection USP to a concentration of 100 or 250 milligrams per milliliter for use as in paragraph (d) of this section.

(2) Each vial contains 25 grams of amoxicillin as the trihydrate. The powder is reconstituted with sterile water for injection USP to a concentration of 250 milligrams per milliliter for use as in paragraph (e).

(b) *Sponsor.* See 053571 in § 510.600(c) of this chapter.

(c) *Related tolerance.* See § 556.38 of this chapter.

(d) *Conditions of use in dogs and cats*—(1) *Amount.* 5 milligrams per pound of body weight daily.

(2) *Indications for use*—(i) *Dogs.* Treatment of infections caused by susceptible strains of organisms as follows: Respiratory infections (tonsillitis, tracheobronchitis) due to *Staphylococcus aureus, Streptococcus* spp., *Escherichia coli,* and *Proteus mirabilis*; genitourinary infections (cystitis) due to *S. aureus, Streptococcus* spp., *E. coli,* and *P. mirabilis*; gastrointestinal infections (bacterial gastroenteritis) due to *S. aureus, Streptococcus* spp., *E. coli,* and *P. mirabilis*; bacterial dermatitis due to *S. aureus, Streptococcus* spp., and *P. mirabilis*; soft tissue infections (abscesses, lacerations, and wounds), due to *S. aureus, Streptococcus* spp., *E. coli,* and *P. mirabilis.*

(ii) *Cats.* Treatment of infections caused by susceptible strains of organisms as follows: Upper respiratory infections due to *S. aureus, Staphylococcus* spp., *Streptococcus* spp., *Hemophilus* spp., *E. coli, Pasteurella* spp., and *P. mirabilis*; genitourinary infections (cystitis) due to *S. aureus, Streptococcus* spp., *E. coli, P. mirabilis,* and *Corynebacterium* spp.; gastrointestinal infections due to *E. coli, Proteus* spp., *Staphylococcus* spp., and *Streptococcus* spp.; skin and soft tissue infections (abscesses, lacerations, and wounds) due to *S. aureus, Staphylococcus* spp., *Streptococcus* spp., *E. coli,* and *Pasteurella multocida.*

(3) *Limitations.* For use in dogs and cats only. Administer once daily for up to 5 days by intramuscular or subcutaneous injection. Continue treatment for 48 hours after the animal has become afebrile or asymptomatic. If no improvement is seen within 5 days, review the diagnosis and change therapy. As with all antibiotics, appropriate in vitro culturing susceptibility testing of samples taken before treatment should be conducted. Federal law restricts this drug to use by or on the order of a licensed veterinarian.

(e) *Condition of use. Cattle*—(1) *Amount.* 3 to 5 milligrams per pound of body weight once a day according to the animal being treated, the severity of infection, and the animal's response.

(2) *Indications for use.*—Treatment of diseases due to amoxicillin-susceptible organisms as follows: Respiratory tract infections (shipping fever, pneumonia) due to *P. multocida, P. hemolytica, Hemophilus* spp., *Staphylococcus* spp., and *Streptococcus* spp. and acute necrotic pododermatitis (foot rot) due to *Fusobacterium necrophorum.*

(3) *Limitations.* Administer once daily for up to 5 days by intramuscular or subcutaneous injection. Continue treatment for 48 to 72 hours after the animal has become afebrile or asymptomatic. Do not continue treatment beyond 5 days. Treated animals must not be slaughtered for food during treatment and for 25 days after the last treatment. As with all antibiotics, appropriate in vitro culturing and susceptibility testing of samples taken before treatment should be conducted. Milk from treated cows must not be used for human consumption during treatment or for 96 hours (8 milkings) after last treatment. Maximum volume per injection should not exceed 30 milliliters. Federal law restricts this drug to use by or on the order of a licensed veterinarian.

§ 522.90 Ampicillin implantation and injectible dosage forms.

§ 522.90a Ampicillin trihydrate sterile suspension.

(a) *Specifications.* Each milliliter contains ampicillin trihydrate equivalent to 200 milligrams of ampicillin.

(1) *Sponsor.* See No. 053501 in § 510.600(c) of this chapter.

(2) *Related tolerances.* See § 556.40 of this chapter.

(3) *Conditions of use*—(i) *Calves.*

(A) *Amount.* For enteritis: 3 milligrams per pound of body weight, intramuscularly, once or twice daily, for up to 3 days. For pneumonia: 3 milligrams per pound of body weight, intramuscularly, twice daily, for up to 3 days.

(B) *Indications for use.* Treatment of bacterial enteritis caused by *Escherichia coli* and bacterial pneumonia caused by *Pasteurella* spp. susceptible to ampicillin.

(C) *Limitations.* Not for use in other animals raised for food production. Treated animals must not be slaughtered for food use during treatment or for 9 days after the last treatment. Federal law restricts this drug to use by or on the order of a licensed veterinarian.

(ii) *Dogs.* (A) *Amount.* 3 to 6 milligrams per pound of body weight intramuscularly, once or twice daily.

(B) *Indications for use.* Treatment of respiratory tract infections due to *E. coli, Pseudomonas* spp., *Proteus* spp., *Staphylococcus* spp., and *Streptococcus* spp.; tonsillitis due to *E. coli, Pseudomonas* spp., *Streptococcus* spp., and *Staphylococcus* spp.; generalized infections (septicemia) associated with abscesses, lacerations, and wounds due to *Staphylococcus* spp. and *Streptococcus* spp.

(C) *Limitations.* Continue treatment at least 48 hours after the animal's temperature has returned to normal and other signs of infection have subsided. Usual treatment is 3 to 5 days. Federal law restricts this drug to use by or on the order of a licensed veterinarian.

(iii) *Cats.* (A) *Amount.* 5 to 10 milligrams per pound of body weight

intramuscularily or subcutaneously, once or twice daily.

(B) *Indications for use.* Treatment of generalized infections (septicemia) associated with abscesses, lacerations, and wounds due to *Staphylococcus* spp., *Streptococcus* spp., and *Pasteurella* spp.

(C) *Limitations.* Continue treatment at least 48 hours after the animal's temperature has returned to normal and other signs of infection have subsided. Usual treatment is 3 to 5 days. Federal law restricts this drug to use by or on the order of a licensed veterinarian.

(iv) *Swine.* (A) *Amount:* 3 milligrams per pound of body weight, intramuscularily, once or twice daily, for up to 3 days.

(B) *Indications for use.* Treatment of bacterial enteritis (colibacillosis) caused by *E. coli* and bacterial pneumonia caused by *Pasteurella* spp. susceptible to ampicillin.

(C) *Limitations.* Treated animals must not be slaughtered for food use during treatment or for 15 days after the last treatment. Federal law restricts this drug to use by or on the order of a licensed veterinarian.

(b) *Specifications.* Each milliliter contains ampicillin trihydrate equivalent to 150 milligrams of ampicillin.

(1) *Sponsor.* See No. 053571 in § 510.600(c) of this chapter.

(2) *Related tolerances.* See § 556.40 of this chapter.

(3) *Conditions of use. Dogs*—(i) *Amount.* 3 to 5 milligrams of ampicillin per pound of body weight, once a day for up to 4 days.

(ii) *Indications for use.* Treatment of bacterial infections of the upper respiratory tract (tonsillitis) due to *Streptococcus* spp., *Staphylococcus* spp., *E. coli, Proteus* spp., and *Pasteurella* spp., and soft tissue infections (abscesses, lacerations, and wounds) due to *Staphylococcus* spp., *Streptococcus* spp., and *E. coli,* when caused by susceptible organisms.

(iii) *Limitations.* Administer intramuscularly. If continued treatment is indicated, oral dosage is recommended. As with all antibiotics, appropriate in vitro culturing and susceptibility tests of samples taken before treatment are recommended. Federal law restricts this drug to use by or on the order of a licensed veterinarian.

§ 522.90b Ampicillin trihydrate for sterile suspension.

(a) *Specifications.* When reconstituted, each milliliter contains ampicillin trihydrate equivalent to 50, 100, or 250 milligrams of ampicillin.

(b) *Sponsor.* See No. 000856 in § 510.600(c) of this chapter.

(c) *Related tolerances.* See § 556.40 of this chapter.

(d) *Conditions of use.* (1) *Dogs*—(i) *Amount.* 3 milligrams per pound of body weight twice daily.

(ii) *Indications for use.* Treatment against strains of organisms susceptible to ampicillin and associated with respiratory tract infections, urinary tract infections, gastrointestinal infections, skin infections, soft tissue infections, and postsurgical infections.

(iii) *Limitations.* Administer by subcutaneous or intramuscular injection. Treatment should be continued for 48 to 72 hours after the animal has become afebrile or asymptomatic. Federal law restricts this drug to use by or on the order of a licensed veterinarian.

(2) *Cats*—(i) *Amount.* 3 milligrams per pound of body weight twice daily.

(B) *Indications for use.* Treatment against strains of organisms susceptible to ampicillin and associated with respiratory tract infections, urinary tract infections, gastrointestinal infections, skin infections, soft tissue infections, and postsurgical infections.

(iii) *Limitations.* Administer by subcutaneous or intramuscular injection. Treatment should be continued for 48 to 72 hours after the animal has become afebrile or asymptomatic. Federal law restricts this drug to use by or on the order of a licensed veterinarian.

(3) *Cattle*—(i) *Amount.* 2 to 5 milligrams per pound of body weight once daily by intramuscular injection.

(ii) *Indications for use.* Treatment of respiratory tract infections caused by organisms susceptible to ampicillin, bacterial pneumonia (shipping fever, calf penumonia, and bovine pneumonia) caused by *Aerobacter* spp., *Klebsiella* spp., *Staphylococcus* spp., *Streptococcus* spp., *Pasteurella multocida,* and *Escherichia coli.*

(iii) *Limitations.* Do not treat cattle for more than 7 days. Milk from treated cows must not be used for food during treatment and for 48 hours (4 milkings) after the last treatment. Cattle must not be slaughtered for food during treatment and for 144 hours (6 days) after the last treatment. Federal law restricts this drug to use by or on the order of a licensed veterinarian.

§ 522.90c Ampicillin sodium for aqueous injection.

(a) *Specifications.* When reconstituted, each milliliter contains ampicillin sodium equivalent to 300 milligrams of ampicillin.

(b) *Sponsor.* See No. 053571 in § 510.600(c) of this chapter.

(c) *Conditions of use. Horses*—(1) *Amount:* 3 milligrams per pound of body weight twice daily.

(2) *Indications for use.* Treatment of respiratory tract infections (pneumonia and strangles) due to *Staphylococcus* spp., *Escherichia coli,* and *Proteus mirabilis,* and skin and soft tissue infections (abscesses and wounds) due to *Staphylococcus* spp., *Streptococcus* spp., *E. coli,* and *P. mirabilis,* when caused by susceptible organisms.

(3) *Limitations.* Administer either intravenously or intramuscularly. Treatment should be continued 48 hours after all symptoms have subsided. If no response is seen in 4 to 5 days, reevaluate diagnosis. Not for use in horses or other animals which are raised for food production. Federal law restricts this drug to use by or on the order of a licensed veterinarian.

15. New § 522.390 is added to read as follows:

§ 522.390 Chloramphenicol injection.

(a) *Specifications.* Each milliliter contains 100 milligrams of chloramphenicol.

(b) *Sponsor.* See Nos. 000069 and 050604 in § 510.600(c) of this chapter.

(c) *Conditions of use. Dogs*—(1) *Amount.* 5 to 15 milligrams per pound of body weight, intramuscularly or intravenously, every 6 hours. In severe infections, use 4 to 6 hour treatment intervals the first day. If no response is obtained in 3 to 5 days, discontinue use and reevaluate diagnosis.

(2) *Indications for use.* Treatment of infections of the respiratory tract, the urinary tract, and enteritis and tonsillitis caused by organisms susceptible to chloramphenicol.

(3) *Limitations.* Not for use in animals raised for food production. Federal law restricts this drug to use by or on the order of a licensed veterinarian.

16. New § 522.650 is added to read as follows:

§ 522.650 Dihydrostreptomycin sulfate injection.

(a) *Specifications.* Each milliliter contains dihydrostreptomycin sulfate equivalent to 500 milligrams of dihydrostreptomycin.

(b) *Sponsor.* See Nos. 000069 and 055529 in § 510.600(c) 9f this chapter.

(c) *National Academy of Sciences/ National Research Council (NAS/NRC) status.* The conditions of use were NAS/NRC reviewed and found effective. Applications for these uses need not include effectiveness data as specified by § 514.111 of this chapter but may require bioequivalency and safety information.

(d) *Conditions of use*—(1) *Amount.* 5 milligrams per pound of body weight every 12 hours.

(2) *Indications for use.* Treatment of leptospirosis in dogs and horses due to *Leptospira canicola, L. icterohemorrhagiae,* and *L. pomona;* in cattle due to *L. pomona;* and in swine due to *L. pomona;* and *L. grippotyphosa.*

(3) *Limitations.* Administer by deep intramuscular injection only. Treatment should be continued for 3 to 5 days or until the urine is free of leptospira for at least 72 hours as measured by darkfield microscopic examination. Treatment with subtherapeutic dosages, excessive duration of therapy, or inappropriate use of this antibiotic may lead to the emergence of streptomycin or dihydrostreptomycin resistant organisms. Discontinue use 30 days before slaughter for food. Not for use in animals producing milk because use of the drug will contaminate the milk. Federal law restricts this drug to use by or on the order of a licensed veterinarian.

17. New §§ 522.1696, 522.1696a, 522.1696b, and 522.1696c, are added to read as follows:

§ 522.1696 Penicillin G procaine implantation and injectable dosage forms.

§ 522.1696a Penicillin G benzathine and penicillin G procaine sterile suspension.

(a) *Specifications.* Each milliliter of aqueous suspension contains penicillin G benzathine and penicillin G procaine, each equivalent to 150,000 units of penicillin G.

(b) *Sponsors.* See sponsors in § 510.600(c) of this chapter for the conditions of use in paragraph (d) of this section as follows:

(1) See Nos. 000008, 000029, 000856, and 010515 for use as in paragraph (d)(1) of this section.

(2) See Nos. 000029 and 000856 for use as in paragraph (d)(2) of this section.

(3) See Nos. 000069 and 010515 for use as in paragraph (d)(3) of this section.

(c) *Related tolerances.* See § 556.510 of this chapter.

(d) *Conditions of use*—(1) *Horses, dogs, and beef cattle.* Treatment of bacterial infections susceptible to penicillin G. Repeat dosage in 48 hours. Federal law restricts this drug to use by or on the order of a licensed veterinarian.

(i) *Horses.* 2 milliliters per 150 pounds of body weight intramuscularly. Do not use in horses intended for food purposes.

(ii) *Dogs.* 1 milliliter per 10 to 25 pounds of body weight intramuscularly or subcutaneously.

(iii) *Beef cattle.* 2 milliliters per 150 pounds of body weight intramuscularly or subcutaneously. Treatment should be limited to two doses. Not to be used in beef cattle within 30 days of slaughter.

(iv) *National Academy of Sciences/National Research Council (NAS/NRC) status.* The conditions of use were NAS/NRC reviewed and found effective. Applications for these uses need not include effectiveness data as specified by § 514.111 of this chapter but may require bioequivalency and safety information.

(2) *Beef cattle.* Treatment of bacterial pneumonia (*Streptococcus* spp., *Corynebacterium pyogenes, Staphylococcus aureus);* upper respiratory infections such as rhinitis or pharyngitis (*C. (pyogenes*); blackleg (*Clostridium chauvoei);* and prophylaxis of bovine shipping fever in 300 to 500 pound beef calves.

(i) *Amount.* 2 milliliters per 150 pounds of body weight subcutaneously. Repeat dosage in 48 hours. Limit treatment to two doses. Not for use within 30 days of slaughter.

(ii) *NAS/NRC status.* The conditions of use were NAS/NRC reviewed and found effective. Applications for these uses need not include effectiveness data as specified by § 514.111 of this chapter but may require bioequivalency and safety information.

(3) *Beef cattle.* Treatment of bacterial pneumonia (shipping fever) (*Streptococcus* spp., *C. pyogenes, S. aureus*); upper respiratory infections such as rhinitis or pharyngitis (*C. pyogenes*); and blackleg (*C. chauvoei*).

(i) 2 milliliters per 150 pounds of body weight subcutaneously. Repeat dosage in 48 hours. Limit treatment to two doses. Not for use within 30 days of slaughter.

(ii) [Reserved]

§ 522.1696b Penicillin G procaine agueous suspension.

(a) *Specifications.* Each milliliter contains penicillin G procaine equivalent to 300,000 units of penicillin G.

(b) *Related tolerances.* See § 556.510 of this chapter.

(c) *National Academy of Sciences/National Research Council (NAS/NRC) status.* The conditions of use were NAS/NRC reviewed and found effective. Applications for these uses need not include effectiveness data as specified by § 514.111 of this chapter, but may require bioequivalency and safety information.

(d) *Sponsor.* See No. 053501 in § 510.600(c) of this chapter.

(1) *Dogs*—(i) *Amount.* 10,000 units per pound of body weight daily at 24-hour intervals.

(ii) *Indications for use.* Treatment of infections caused by penicillin-sensitive organisms.

(iii) *Limitations.* For intramuscular use only. Continue treatment at least 48 hours after symptoms disappear. Federal law restricts this drug to use by or on the order of a licensed veterinarian.

(2) *Cats*—(i) *Amount.* 10,000 units per pound of body weight daily at 24-hour intervals.

(ii) *Indications for use.* Treatment of infections caused by penicillin-sensitive organisms.

(iii) *Limitations.* For intramuscular use only. Continue treatment at least 48 hours after symptoms disappear. Federal law restricts this drug to use by or on the order of a licensed veterinarian.

(3) *Cattle, sheep, swine, and horses*—(i) *Amount.* 3,000 units per pound of body weight (1 milliliter per 100 pounds body weight) daily.

(ii) *Indications for use.* Treatment of cattle and sheep for bacterial pneumonia (shipping fever) caused by *Pasteurella multocida;* swine for erysipelas caused by *Erysipelothrix insidiosa;* and horses for strangles caused by *Streptococcus equi.*

(iii) *Limitations.* Administer by deep intramuscular injection. Continue treatment at least 48 hours after symptoms disappear but do not exceed 7 days of treatment in nonlactating dairy and beef cattle, sheep, and swine, or 5 days in lactating cattle. Milk that has been taken during treatment and for 48 hours (four milkings) after the last treatment must not be used for food. Discontinue treatment for the following number of days before slaughter: Nonruminating cattle (calves)—7; all other cattle—4; sheep—8; and swine—6. Not for use in horses intended for food.

(e) *Sponsor.* See No. 055529 in § 510.600(c) of this chapter.

(1) *Cattle, sheep, swine, and horses*—(i) *Amount.* 3,000 units per pound of body weight (1 milliliter per 100 pounds body weight) daily.

(ii) *Indications for use.* Treatment of cattle and sheep for bacterial pneumonia (shipping fever) caused by *Pasteurella multocida;* swine for erysipelas caused by *Erysipelothrix insidiosa;* and horses for strangles caused by *Streptococcus equi.*

(iii) *Limitations.* For intramuscular use only. Continue treatment at least 1 day after symptoms disappear (usually 2 or 3 days). Treatment should not exceed 4 consecutive days. Do not exceed 10 milliliters per injection site. Milk that has been taken during treatment and for 72 hours (six milkings) after the latest treatment must not be used for food. Discontinue treatment for the following number of days before slaughter:

Cattle—10, sheep—9, and swine—7. Not for use in horses intended for food.

(2) [Reserved]

(f) *Sponsor.* See Nos. 000069 and 010515 in § 510.600(c) of this chapter. See paragraph (d) of this section for conditions of use, except that milk taken during treatment and for 48 hours (four milkings) after the latest treatment shall not be used for food.

§ 522.1696c Penicillin G procaine in oil.

(a) *Specifications.* Each milliliter contains penicillin G procaine equivalent to 300,000 units of penicillin G.

(b) *Sponsor.* See No. 053501 in § 510.600(c) of this chapter.

(c) *National Academy of Sciences/National Research Council (NAS/NRC) status.* The conditions of use were NAS/NRC reviewed and found effective. Applications for these uses need not include effectiveness data as specified by § 514.111 of this chapter, but may require bioequivalency and safety information.

(d) *Conditions of use.* (1) *Amount.* Dogs and cats—10,000 units per pound of body weight once daily. Horses—3,000 units per pound of body weight once daily.

(2) *Indications for use.* Treatment of infections of dogs, cats, and horses caused by penicillin-susceptible organisms such as Streptococci, Staphylococci, and Corynebacteria.

(3) *Limitations.* Not for use in food-producing animals. Federal law restricts this drug to use by or on the order of a licensed veterinarian.

PART 524—[AMENDED]

Part 524 is amended as follows:

18. The authority citation for 21 CFR part 524 continues to read as follows:

Authority: Sec. 512 of the Federal Food, Drug, and Cosmetic Act (21 U.S.C. 360b).

19. The heading for part 524 is revised to read as follows:

PART 524—OPHTHALMIC AND TOPICAL DOSAGE FORM NEW ANIMAL DRUGS

20. New §§ 524.154 and 524.155 are added to read as follows:

§ 524.154 Bacitracin or bacitracin zinc-neomycin sulfate-polymyxin B sulfate ophthalmic ointment.

(a) *Sponsor.* To firms identified in § 510.600(c) of this chapter as follows:

(1) To 000009; each gram contains 500 units of bacitracin, 3.5 milligrams of neomycin, and 10,000 units of polymyxin B.

(2) To 017220 and 025463; each gram contains 400 units of bacitracin zinc, 3.5 milligrams of neomycin, and 10,000 units of polymyxin B sulfate.

(b) *Conditions of use. Dogs and Cats.* (1) *Amount.* Apply a thin film over the cornea 3 or 4 times daily.

(2) *Indications for use.* Treatment of superficial bacterial infections of the eyelid and conjunctiva of dogs and cats when due to susceptible organisms.

(3) *Limitations.* Laboratory tests should be conducted including in vitro culturing and susceptibility tests on samples collected prior to treatment. Federal law restricts this drug to use by or on the order of a licensed veterinarian.

§ 524.155 Bacitracin zinc-polymyxin B sulfate-neomycin sulfate-hydrocortisone or hydrocortisone acetate ophthalmic ointment.

(a) *Sponsor.* To firms identified in § 510.600(c) of this chapter as follows:

(1) To 017220; each gram of ointment contains 400 units of bacitracin zinc, 10,000 units of polymyxin B sulfate, 5 milligrams of neomycin sulfate (equivalent to 3.5 milligrams of neomycin base), and 10 milligrams of hydrocortisone.

(2) To 025463; each gram of ointment contains 400 units of bacitracin zinc, 10,000 units of polymyxin B sulfate, 5 milligrams of neomycin sulfate (equivalent to 3.5 milligrams of neomycin base), and 10 milligrams of hydrocortisone acetate.

(b) *Conditions of use. Dogs and cats.* (1) *Amount.* Apply a thin film over the cornea three or four times daily.

(2) *Indications for use.* For treating acute or chronic conjunctivitis caused by susceptible organisms.

(3) *Limitations.* All topical ophthalmic preparations containing corticosteroids with or without an antimicrobial agent are contraindicated in the initial treatment of corneal ulcers. They should not be used until the infection is under control and corneal regeneration is well underway. Federal law restricts this drug to use by or on the order of a licensed veterinarian.

21. New §§ 524.390, 524.390a, 524.390b, 524.390c, and 524.390d are added to read as follows:

§ 524.390 Chloramphenicol ophthalmic and topical dosage forms.

§ 524.390a Chloramphenicol ophthalmic ointment.

(a) *Specifications.* Each gram contains 10 milligrams chloramphenicol in a petrolatum base.

(b) *Sponsor.* See Nos. 000856 and 025463 in § 510.600(c) of this chapter for use as in paragraph (c)(1)(i) of this section. See No. 017030 for use as in paragraph (c)(1)(ii) of this section.

(c) *Conditions of use. Dogs and cats.* (1) *Amount.* Apply as follows:

(i) Every 3 hours around the clock for 48 hours after which night instillations may be omitted.

(ii) Four to six times daily to affected eye for the first 72 hours depending upon the severity of the condition. A small amount of ointment should be placed in the lower conjunctival sac.

(2) *Indications for use.* Treatment of bacterial conjunctivitis caused by pathogens susceptible to chloramphenicol.

(3) *Limitations.* Continue treatment for 48 hours (2 days) after eye appears normal. Therapy for cats should not exceed 7 days. Prolonged use in cats may produce blood dyscrasias. If improvement is not noted in a few days a change of therapy should be considered. When infection may be cause of disease, especially in purulent or catarrhal conjunctivitis, attempts should be made to determine through susceptibility testing, which antibiotics will be effective prior to applying ophthalmic preparations. This chloramphenicol product must not be used in animals producing meat, eggs, or milk. The length of time that residues persist in milk or tissues has not been determined. Federal law restricts this drug to use by or on the order of a licensed veterinarian.

§ 524.390b Chloramphenicol ophthalmic solution.

(a) *Specifications.* Each milliliter contains 5 milligrams of chloramphenicol.

(b) *Sponsor.* See No. 017030 in § 510.600(c) of this chapter.

(c) *Conditions of use. Dogs and Cats.* (1) *Amount.* Apply one or two drops, 4 to 6 times a day for the first 72 hours, depending upon the severity of the condition. Intervals between applications may be increased after the first 2 days.

(2) *Indications for use.* Treatment of bacterial conjunctivitis caused by organisms susceptible to chloramphenicol. Therapy should be continued for 48 hours after the eye appears normal.

(3) *Limitations.* Therapy for cats should not exceed 7 days. As with other antibiotics, prolonged use may result in overgrowth of nonsusceptible organisms. If superinfection occurs, or if clinical improvement is not noted within a reasonable period, discontinue use, and institute appropriate therapy. Prolonged use in cats may produce blood dyscrasias. Chloramphenicol products must not be used in meat-, egg-, or milk-producing animals. The length of

time that residues persist in milk or tissues has not been determined. Federal law restricts this drug to use by or on the order of a licensed veterinarian.

§ 524.390c Chloramphenicol-prednisolone-tetracaine-squalane topical suspension.

(a) *Specification.* Each milliliter contains 4.2 milligrams of chloramphenicol, 1.7 milligrams of prednisolone, 4.2 milligrams of tetracaine, and 0.21 milliliter of squalane.

(b) *Sponsor.* See No. 017030 in § 510.600(c) of this chapter.

(c) *Conditions of use. Dogs and cats.* (1) *Amount.* Apply two or three times daily or as needed for not more than 7 days. Severe infections should be supplemented by systemic therapy.

(2) *Indications for use.* Treatment of acute otitis externa and pyodermas (acute moist dermatitis, vulvar fold dermatitis, lip fold dermatitis, interdigital dermatitis, and juvenile dermatitis) in dogs and cats.

(3) *Limitations.* The drug must not be used in the eyes. Prolonged use in cats may produce blood dyscrasias. Laboratory tests should be conducted, including in vitro culturing and susceptibility tests on samples collected prior to treatment. Chloramphenicol products must not be used in meat-, egg-, or milk-producing animals. The length of time that residues persist in milk or tissues has not been determined. Federal law restricts this drug to use by or on the order of a licensed veterinarian.

§ 524.390d Chloramphenicol-prednisolone ophthalmic ointment.

(a) *Specifications.* Each gram contains 10 milligrams of chloramphenicol and 2.5 milligrams of prednisolone acetate.

(b) *Sponsor.* See No. 017030 in § 510.600(c) of this chapter.

(c) *Conditions of use. Dogs and cats.* (1) *Amount.* Apply 4 to 6 times daily to the affected eye for the first 72 hours depending upon the severity of the condition. Continue treatment for 48 hours after the eye appears normal.

(2) *Indications for use.* Treatment of bacterial conjunctivitis and ocular inflammation caused by organisms susceptible to chloramphenicol.

(3) *Limitations.* Therapy for cats should not exceed 7 days, prolonged use in cats may produce blood dyscrasia. As with other antibiotics, prolonged use may result in overgrowth of nonsusceptible organisms. If superinfection occurs or if clinical improvement is not noted within a reasonable period, discontinue use and institute appropriate therapy. All topical ophthalmic preparations containing corticosteroids, with or without an antimicrobial agent, are contraindicated in the initial treatment of corneal ulcers. They should not be used until the infection is under control and corneal regeneration is well underway. Chloramphenicol products must not be used in meat-, egg-, or milk-producing animals. The length of time that residues persist in milk or tissues has not been determined. Federal law restricts this drug to use by or on the order of a licensed veterinarian.

PART 526—[AMENDED]

Part 526 is amended as follows:

22. The authority citation for 21 CFR part 526 continues to read as follows:

Authority: Sec. 512 of the Federal Food, Drug, and Cosmetic Act (21 U.S.C. 360b).

23. The heading for part 526 is revised to read as follows:

PART 526—INTRAMAMMARY DOSAGE FORMS

24. New § 526.88 is added to read as follows:

§ 526.88 Amoxicillin trihydrate for intramammary infusion.

(a) *Specifications.* Each single dose syringe contains amoxicillin trihydrate equivalent to 62.5 milligrams of amoxicillin.

(b) *Sponsor.* See No. 05371 in § 510.600(c) of this chapter.

(c) *Related tolerances.* See § 556.38 of this chapter.

(d) *Conditions of use—Lactating cows*—(1) *Amount.* One syringe (equivalent to 62.5 milligrams amoxicillin) per quarter.

(2) *Indications for use.* For the treatment of subclinical infectious bovine mastitis due to *Streptococcus agalactiae* and *Straphylococcus aureus* (penicillin sensitive).

(3) *Limitations.* Administer after milking. Clean and disinfect the teat. Use one syringe per infected quarter every 12 hours for a maximum of 3 doses. Do not use milk taken from treated animals for food purposes within 60 hours (5 milkings) after last treatment. Do not slaughter treated animals for food purposes within 12 days after the last treatment. Federal law restricts this drug to use by or on the order of a licensed veterinarian.

25. New §§ 526.464, 526.464a, 526.464b, 526.464c, and 526.464d are added to read as follows:

§ 526.464 Cloxacillin intramammary dosage forms.

§ 526.464a Cloxacillin benzathine for intramammary infusion.

(a) *Specifications.* Each dose contains cloxacillin benzathine equivalent to 500 milligrams of cloxacillin.

(b) *Related tolerances.* See § 556.165 of this chapter.

(c) *Sponsor.* See No. 000856 in § 510.600(c) of this chapter for use in dairy cows.

(1) *Amount.* Administer aseptically into each infected quarter immediately after last milking or early in dry period.

(2) *Indications for use.* Treatment of mastitis is caused by *Staphylococcus aureus* and *Streptococus agalactiae* including penicillin resistant strains in dairy cows during the dry period.

(3) *Limitations.* For use in dry cows only. Not to be used within 30 days of calving. Animals infused with this product must not be slaughtered for food use for 30 days after the latest infusion. Federal law restricts this drug to use by or on the order of a licensed veterinarian.

(d) *Sponsor.* See No. 053571 in § 510.600(c) of this chapter for use in dairy cows.

(1) *Amount.* Administer one dose in each quarter immediately after last milking.

(2) *Indications for use.* Treatment and prophylaxis of bovine mastitis in nonlactating cows due to *S. agalactiae* and *S. aureus.*

(3) *Limitations.* For use in dry cows only. Not to be used within 4 weeks (28 days) of calving. Animals infused with this product must not be slaughtered for food use for 4 weeks (28 days) after the latest infusion. Federal law restricts this drug to use by or on the order of a licensed veterinarian.

§ 526.464b Cloxacillin benzathine for intramammary infusion, sterile.

(a) *Specifications.* Each 6 milliliter dose contains cloxacillin benzathine equivalent to 500 milligrams of cloxacillin.

(b) *Related tolerances.* See § 556.165 of this chapter.

(c) *Sponsor.* See No. 53501 in § 510.600(c) of this chapter.

(1) *Amount.* 6 milliliters per infected quarter aseptically immediately after last milking at the time of drying-off of the cow.

(2) *Indications for use.* Treatment of mastitis is caused by *Staphylococcus aureus* and *Streptococus agalactiae* in dairy cows at the time of drying-off of the cow.

(3) *Limitations.* For use in dry cows only Not to be used within 30 days of

calving. Milk taken from treated cows prior to 72 hours (6 milkings) after calving must not be used for human food. Animals infused with this product must not be slaughtered for food from the time of infusion until 72 hours after calving. Federal law restricts this drug to use by or on the order of a licensed veterinarian.

(d) *Sponsor.* See No. 053571 in § 510.600(c) of this chapter.

(1) *Amount.* One dose per infected quarter immediately after last milking.

(2) *Indications for use.* Treatment and prophylaxis of bovine mastitis in nonlactating cows due to *Streptococcus agalactiae* and *Staphylococcus aureus.*

(3) *Limitations.* For use in dry cows only. Not to be used within 4 weeks (28 days) of calving. Animals infused with this product must not be slaughtered for food use for 4 weeks (28 days) after the latest infusion. Federal law restricts this drug to use by or on the order of a licensed veterinarian.

§ 526.484c Cloxacillin sodium for intramammary infusion, sterile.

(a) *Specifications.* Each milliliter contains cloxacillin sodium equivalent to 20.0 milligrams of cloxacillin.

(b) *Sponsor.* See No. 053571 in § 510.600(c) of this chapter.

(c) *Related tolerances.* See § 556.165 of this chapter.

(d) *Conditions of use. Lactating cows*—(1) *Amount.* 10 milliliters (one dose of 200 milligrams) per infected quarter.

(2) *Indications for use.* Treatment of mastitis in lactating cows due to *Streptococcus agalactiae* and *Staphylococcus aureus,* nonpenicillinase-producing strains.

(3) *Limitations.* Administer after milking, cleaning, and disinfecting, and as early as possible after detection. Treatment should be repeated at 12-hour intervals for a total of three doses. Milk taken from treated animals within 48 hours (four milkings) after the latest treatment should not be used for food. Treated animals should not be slaughtered for food within 10 days after the latest treatment. Federal law restricts this drug to use by or on the order of a licensed veterinarian.

§ 526.464d Cloxacillin sodium for intramammary infusion.

(a) *Specifications.* Each milliliter contains cloxacillin sodium equivalent 20.0 milligrams of cloxacillin.

(b) *Sponsor.* See No. 053571 in § 510.600(c) of this chapter.

(c) *Related tolerances.* See § 556.165 of this chapter.

(d) *Conditions for use. Lactating cows*—(1) *Amount.* 10 milliliters (one dose of 200 milligrams) per infected quarter.

(2) *Indications for use.* Treatment of mastitis in lactating cows due to *Streptococcus agalactiae* and *Staphylococcus aureus,* nonpenicillinase-producing strains.

(3) *Limitations.* Administer after milking, cleaning, and disinfecting, and as early as possible after detection. Treatment should be repeated at 12-hour intervals for a total of three doses. Milk taken from treated animals within 48 hours (4 milkings) after the latest treatment should not be used for food. Treated animals should not be slaughtered for food within 10 days after the latest treatment. Federal law restricts this drug to use by or on the order of a licensed veterinarian.

26. New § 526.1130 is added to read as follows:

§ 526.1130 Hetacillin potassium for intramammary infusion.

(a) *Specifications.* Each 10 milliliter syringe contains hetacillin potassium equivalent of 62.5 milligrams of ampicillin.

(b) *Sponsor.* See No. 000856 in § 510.600(c) of this chapter.

(c) *Conditions of use. Lactating cows*—(1) *Amount.* 10 milliliters of hetacillin potassium equivalent to 62.5 milligrams ampicillin into each infected quarter. Repeat at 24-hour intervals until a maximum of three treatments has been given.

(2) *Indications for use.* Treating acute, chronic, or subclinical bovine mastitis in lactating cows caused by susceptible strains of *Streptococcus agalactiae, Streptococcus dysgalactiae, Staphylococcus aureus,* and *Escherichia coli.*

(3) *Limitations.* If definite improvement is not noted within 48 hours after treatment, the causal organism should be further investigated. Milk that has been taken from animals during treatment and for 72 hours (6 milkings) after the latest treatment must not be used for food. Treated animals must not be slaughtered for food until 10 days after the latest treatment. Federal law restricts this drug to use by or on the order of a licensed veterinarian.

27. New § § 526.1696, 526.1696a, 526.1696b, 526.1696c, and 526.1696d are added to read as follows:

§ 526.1696 Penicillin intramammary dosage forms.

§ 526.1696a Penicillin G procaine in oil.

(a) *Specifications.* Each milliliter contains penicillin G procaine equivalent to 100,000 units of penicillin G in peanut, sesame, or soybean oils.

(b) *Related tolerances.* See § 556.510 of this chapter.

(c) *Sponsor.* See No. 010515 in § 510.600(c) of this chapter.

(1) *National Academy of Sciences/National Research Council (NAS/NRC) status.* The conditions specified in paragraph (c)(2)(i)(B) of this section were NAS/NRC reviewed and found effective. Applications for these uses need not include effectiveness data as specified by § 514.111 of this chapter, but may require bioequivalency and safety information.

(2) *Conditions of use.* Treating bovine mastitis caused by *Streptococcus agalactiae, S. dygalactiae,* and *S. uberus* in lactating cows as follows:

(i) *Three-dose regimen.* Administer by intramammary infusion in each infected quarter as follows:

(A) *6-milliliter dose (peanut oil).* Treatment may be repeated at 12-hour intervals. Milk that has been taken from animals during treatment and for 84 hours (7 milkings) after the latest treatment must not be used for food. Animals must not be slaughtered for food during treatment or within 4 days after the latest treatment.

(B) *10-milliliter dose (sesame oil).* Treatment may be repeated at 12-hour intervals. Milk that has been taken from animals during treatment and for 60 hours (5 milkings) after the latest treatment must not be used for food. Animals must not be slaughtered for food during treatment or within 3 days after the latest treatment.

(ii) *Two-dose regimen. 10-milliliter dose (peanut oil).* Administer by intramammary infusion in each infected quarter. Treatment may be repeated at intervals of 12 hours. Milk taken from animals during treatment and for 60 hours (5 milkings) after the latest treatment must not be used for food. Animals must not be slaughtered for food during treatment or within 4 days after latest treatment.

(d) *Sponsor.* See No. 050604 in § 510.600(c) of this chapter.

(1) *10-milliliter dose (peanut oil).* Administer by intramammary infusion in each infected quarter. Treatment may be repeated at 12-hour intervals for not more than three doses, as indicated by clinical response.

(2) *Indications for use.* Treating bovine mastitis caused by *Streptococcus agalactiae, S. dysgalactiae,* and *S. uberus* in lactating cows as follows:

(3) *Limitations.* Milk that has been taken from animals during treatment and for 60 hours after the latest treatment must not be used for food. Animals must not be slaughtered for

food during treatment or within 3 days after the latest treatment.

(e) *Sponsor.* See No. 010515 (sesame oil) and No. 050604 (peanut oil) in § 510.600(c) of this chapter.

(1) *NAS/NRC status.* The conditions of use were NAS/NRC reviewed and found effective. Applications for these uses need not include effectiveness data as specified by § 514.111 of this chapter, but may require bioequivalency and safety information.

(2) *Single-dose regimen.* One 10-milliliter dose (sesame oil or peanut oil) in each infected quarter at time of drying-off.

(3) *Indications of use.* Treating bovine mastitis caused by *Streptococcus agalactiae* in dry cows.

(4) *Limitations.* Discard all milk for 72 hours (6 milkings) following calving, or later as indicated by the marketable quality of the milk. Animals must not be slaughtered for food within 14 days postinfusion.

(f) *Sponsor.* See 000010 in § 510.600(c) of this chapter.

(1) *Three-dose regimen.* Single 10-milliliter syringe (soybean oil vehicle) in each infected quarter after milking. Repeat procedure at 12-hour intervals for not more than three doses.

(2) *Indications for use.* Aid in the treating of mastitis caused by *Streptococcus agalactiae, S. dysgalactiae,* and *S. uberis* in lactating cows.

(3) *Limitations.* Milk that has been taken from animals during treatment and for 60 hours (5 milkings) after the latest treatment must not be used for food. Animals must not be slaughtered for food during treatment or within 3 days after the latest treatment.

§ 526.1696b Penicillin G procaine-dihydrostreptomycin in soybean oil for intramammary infusion (dry cows).

(a) *Specifications.* Each 10 milliliters of suspension contains penicillin G procaine equivalent to 200,000 units of penicillin G and dihydrostreptomycin sulfate equivalent to 300 milligrams of dihydrostreptomycin.

(b) *Sponsor.* See No. 000010 in § 510.600(c) of this chapter.

(c) *Related tolerances.* See §§ 556.200 and 556.510 of this chapter.

(d) *Conditions of use. Dairy cows*—(1) *Amount.* One syringe into each quarter at the last milking prior to drying off.

(2) *Indications for use.* Intramammary treatment of subclinical mastitis in dairy cows at the time of drying off, specifically against infections caused by *Staphylococcus aureus* and *Streptococcus agalactiae.*

(3) *Limitations.* Not to be used within 6 weeks of calving. For use in dry cows only. Milk taken from cows within 24 hours (2 milkings) after calving must not be used for food. Animals infused with this drug must not be slaughtered for food within 60 days of treatment nor within 24 hours after calving.

§ 526.1696c Penicillin G procaine-dihydrostreptomycin sulfate for intramammary infusion (dry cows).

(a) *Specifications.* Each 10 milliliters of suspension contains penicillin G procaine equivalent to 1 million units of penicillin G and dihydrostreptomycin suflate equivalent to 1 gram of dihydrostreptomycin.

(b) *Sponsor.* See No. 033392 in § 510.600(c) of this chapter.

(c) *Related tolerances.* See §§ 556.200 and 556.510 of this chapter.

(d) *Conditions of use. Dairy cows*—(1) *Amount.* One syringe per quarter at the last milking prior to drying off.

(2) *Indications for use.* Intramammary use to reduce the frequency of existing infection and to prevent new infections with *Staphylococcus aureus* in dry cows.

(3) *Limitations.* Not to be used within 6 weeks of freshening. Not for use in lactating cows. Milk taken from animals within 96 hours (8 milkings) after calving must not be used for feed. Animals infused with this drug must not be slaughtered for food within 60 days from the time of infusion nor within 96 hours after calving. Federal law restricts this drug to use by or on the order of a licensed veterinarian.

§ 526.1696d Penicillin G procaine-novobiocin for intramammary infusion.

(a) *Specifications.* For lactating cattle: each 10-milliliter dose contains 100,000 units of penicillin G procaine and 150 milligrams of novobiocin as novobiocin sodium. For dry cows: 200,000 units of penicillin G procaine and 400 milligrams of novobiocin as novobiocin sodium.

(b) *Sponsor.* See No. 000009 in § 510.600(c) of this chapter.

(c) *Conditions of use*—(1) *Lactating cows*—(i) *Amount.* 10 milliliters in each infected quarter after milking. Repeat once after 24 hours.

(ii) *Indications for use.* Treating lactating cows for mastitis caused by susceptible strains of *Staphylococcus aureus, Streptococcus agalactiae, Streptococcus dysgalactiae,* and *Streptococcus uberis.*

(iii) *Limitations.* For udder instillation in lactating cattle only. Do not milk for at least 6 hours after treatment; thereafter, milk at regular intervals. Milk taken from treated animals within 72 hours (6 milkings) after the latest treatment must not be used for food. Treated animals must be slaughtered for food for 15 days following the latest treatment. If redness, swelling, or abnormal milk persists, discontinue use and consult a veterinarian.

(2) *Dry cows*—(i) *Amount.* 10 milliliters in each quarter at time of drying off.

(ii) *Indications for use.* Treatment of subclinical mastitis caused by susceptible strains of *Staphylococcus aureus* and *Streptococcus agalactiae.*

(iii) *Limitations.* For udder instillation in dry cows only. Do not use less than 30 days prior to calving. Milk from treated cows must not be used for food during the first 72 hours after calving. Treated animals must not be slaughtered for food for 30 days following udder infusion.

PART 529—[AMENDED]

Part 529 is amended as follows:

28. The authority citation for 21 CFR part 529 continues to read as follows:

Authority: Sec. 512 of the Federal Food, Drug, and Cosmetic Act (21 U.S.C. 360b).

29. The heading for part 529 is revised to read as follows:

PART 529—CERTAIN OTHER DOSAGE FORM NEW ANIMAL DRUGS

30. New § 529.2464 is added to read as follows:

§ 529.2464 Ticarcillin powder.

(a) *Specifications.* Each vial contains ticarcillin disodium equivalent to 6 grams of ticarcillin to be reconstituted with 25 milliliters of sterile water for injection or sterile physiological saline.

(b) *Sponsor.* See No. 053571 in § 510.600(c) of this chapter.

(c) *Conditions of use*—(1) *Amount.* 6 grams per day, intrauterine, for 3 consecutive days during estrus.

(2) *Indications for use. Horses.* Intrauterine treatment of endometritis caused by beta-hemolytic streptococci.

(3) *Limitations.* For intrauterine use in horses only. Infuse aseptically. Not for use in horses raised for food production. Federal law restricts this drug to use by or on the order of a licensed veterinarian.

PARTS 536, 539, 540, 544, 546, 548, AND 555—[REMOVED]

31. Parts 536, 539, 540, 544, 546, 548, and 555 are removed.

Dated: August 6, 1992.

Michael R. Taylor,

Deputy Commissioner for Policy.

[FR Doc. 92-19442 Filed 8-17-92; 8:45 am]

BILLING CODE 4160-01-M

federal register

Tuesday
August 18, 1992

Part VI

Department of Education

National Institute on Disability and Rehabilitative Services; Inviting Application for New Awards Under Certain Programs for Fiscal Year 1993; Notice

DEPARTMENT OF EDUCATION

[CFDA Nos.: 84.133D, 84.133F, 84.133G, and 84.133P]

Office of Special Education and Rehabilitative Services; National Institute on Disability and Rehabilitation Research; Notice Inviting Applications for New Awards Under Certain Programs for Fiscal Year 1993

Note to Applicants: This notice is a complete application package. Together with the statute authorizing the programs and applicable regulations governing the programs, including the Education Department general Administrative Regulations (EDGAR), the notice contains information, application forms, and instructions needed to apply for a grant under these competitions.

These programs support AMERICA 2000, the President's strategy for moving the Nation toward the National Education Goals, by seeking to promote high quality research and its use to improve the lives of individuals with disabilities. The National Education Goals call for: All children in America to start school ready to learn; all students to demonstrate competency in challenging subject matter and to learn to use their minds well; and adult Americans to be literate and to possess the knowledge and skills necessary to compete in a global economy and exercise the rights and responsibilities of citizenship.

The estimated funding levels in this notice do not bind the Department of Education to make awards in any of the categories in the notice, or to any specific number of awards or funding levels, unless otherwise specified in the statute.

The program regulations in 34 CFR 350.20 provide that an applicant for assistance under parts 355, 357 and 360 shall submit copies of their applications to the appropriate State rehabilitation agency (or agencies) for comment, in accordance with the procedures in EDGAR, 34 CFR 75.155–75.159. This means that organizations applying for the Regional Information Exchange awards under part 355 must submit copies of their applications to each State Vocational Rehabilitation Agency and Rehabilitation Agency for the Blind within the region for which they are applying. Applicants in other programs must send copies of their applications to each State Vocational Rehabilitation Agency within the region for which they are applying.

Applicable Regulations: The Education Department General Administrative Regulations (EDGAR), 34 CFR parts 74, 75, 77, 80, 81, 82, 85, and 86; and the following program regulations:

Knowledge Dissemination and Utilization Program (CFDA No. 84.133D) 34 CFR parts 350 and 355.

Rehabilitation Research Fellowships Program (CFDA No. 84.133F) 34 CFR parts 350 and 356.

Field-Initiated Research Program (CFDA No. 84.133G) 34 CFR parts 350 and 357.

Research Training and Career Development Program (CFDA No. 84.133P) 34 CFR parts 350 and 360.

Program Title: Knowledge Dissemination and Utilization Programs.

CFDA Number: 84.133D.

Purpose: The Knowledge Dissemination and Utilization Program is designed to support activities that will ensure that rehabilitation knowledge generated from projects and centers funded by the Institute and other sources is fully utilized to improve the lives of individuals with disabilities.

Organizations applying for the Regional Information Exchange awards must submit copies of their applications to each State Vocational Rehabilitation Agency and Rehabilitation Agency for the Blind within the region for which they are applying.

Under 34 CFR 75.105(c)(3) and 34 CFR 355.32(a) and (b), the Secretary will only consider those applications that meet the following absolute priority:

Absolute Priority—Regional Information Exchange (RIE)

A Regional Information Exchange (RIE) is intended to facilitate the adaption of exemplary program models that were developed within the locality or region of the adapting agency. The RIEs must identify and validate exemplary programs within the established priority areas, "market" the model programs to potential adapting agencies, and provide technical assistance in the adoption or adaptation of the model. Potential applicants considering applying for the Rehabilitation Information Exchange awards should refer to the April 17, 1992 issue of the **Federal Register** (57 FR 13721).

Awards will be made in regions that do not have RIEs. To determine which regions do not have RIEs, potential applicants may call Ellen Blasiotti after September 30, 1992. Mrs. Blasiotti's telephone number is (202) 205–9800; deaf and hearing impaired individuals may call (202) 205–5479 for TDD services.

Selection Criteria. The Secretary, in accordance with 34 CFR 355.31, evaluates applications for Knowledge Dissemination and Utilization Programs according to the following selection criteria in 34 CFR 350.34.

(a) *Potential Impact of Outcomes: Importance of Program* (Weight 3.0). The Secretary reviews each application to determine to what degree—

(1) The proposed activity relates to the announced priority;

(2) The research is likely to produce new and useful information (research activities only);

(3) The need and target population are adequately defined;

(4) The outcomes are likely to benefit the defined target population;

(5) The training needs are clearly defined (training activities only);

(6) The training methods and developed subject matter are likely to meet the defined need (training activities only); and

(7) The need for information exists (utilization activities only).

(b) *Potential Impact of Outcomes: Dissemination/Utilization* (Weight 3.0). The Secretary reviews each application to determine to what degree—

(1) The research results are likely to become available to others working in the field (research activities only);

(2) The means to disseminate and promote utilization by others are defined;

(3) The training methods and content are to be packaged for dissemination and use by others (training activities only); and

(4) The utilization approach is likely to address the defined need (utilization activities only).

(c) *Probability of Achieving Proposed Outcomes: Program/Project Design* (Weight 5.0). The Secretary reviews each application to determine to what degree—

(1) The objectives of the project(s) are clearly stated;

(2) The hypothesis is sound and based on evidence (research activities only);

(3) The project design/methodology is likely to achieve the objectives;

(4) The measurement methodology and analysis is sound (research and development/demonstration activities only);

(5) The conceptual model (if used) is sound (development/demonstration activities only);

(6) The sample populations are correct and significant (research and development/demonstration activities only);

(7) The human subjects are sufficiently protected (research and development/demonstration activities only);

(8) The device(s) or model system is to be developed in an appropriate environment;

(9) The training content is comprehensive and at an appropriate level (training activities only);

(10) The training methods are likely to be effective (training activities only);

(11) The new materials (if developed) are likely to be of high quality and uniqueness (training activities only);

(12) The target populations are linked to the project (utilization activities only); and

(13) The format of the dissemination medium is the best to achieve the desired result (utilization activities only).

(d) *Probability of Achieving Proposed Outcomes: Key Personnel* (Weight 4.0). The Secretary reviews each application to determine to what degree—

(1) The principal investigator and other key staff have adequate training and/or experience and demonstrate appropriate potential to conduct the proposed research, demonstration, training, development, or dissemination activity;

(2) The principal investigator and other key staff are familiar with pertinent literature and/or methods;

(3) All required disciplines are effectively covered;

(4) Commitments of staff time are adequate for the project; and

(5) The applicant, as part of its non-discriminatory employment practices, to encourage applications for employment from persons who are members of groups that traditionally have been underrepresented, such as—

(i) Members of racial or ethnic minority groups;

(ii) Women;

(iii) Handicapped persons; and

(iv) The elderly.

(e) *Probability of Achieving Proposed Outcomes: Evaluation Plan* (Weight 1.0). The Secretary reviews each application to determine to what degree—

(1) There is a mechanism to evaluate plans, progress and results;

(2) The evaluation methods and objectives are likely to produce data that are quantifiable; and

(3) The evaluation results, where relevant, are likely to be assessed in a service setting.

(f) *Program/Project Management: Plan of Operations* (Weight 2.0). The Secretary reviews each application to determine to what degree—

(1) There is an effective plan of operation that insures proper and efficient administration of the project(s);

(2) The applicant's planned use of its resources and personnel is likely to achieve each objective;

(3) Collaboration between institutions, if proposed, is likely to be effective; and

(4) There is a clear description of how the applicant will include eligible project participants who have been traditionally underrepresented, such as—

(i) Members of racial or ethnic minority groups;

(ii) Women;

(iii) Handicapped persons; and

(iv) The elderly.

(g) *Program/Project Management: Adequacy of Resources* (Weight 1.0). The Secretary reviews each application to determine to what degree—

(1) The facilities planned for use are adequate;

(2) The equipment and supplies planned for use are adequate; and

(3) The commitment of the applicant to provide administrative support and adequate facilities is evident.

(h) *Program/Project Management: Budget and Cost Effectiveness* (Weight 1.0). The Secretary reviews each application to determine to what degree—

(1) The budget for the project(s) is adequate to support the activities;

(2) The costs are reasonable in relation to the objectives of the projects(s); and

(3) The budget for subcontracts (if required) is detailed and appropriate.

Eligible Applicants: Parties eligible to apply for grants under this program are State and public agencies or organizations, private agencies or organizations, including institutions of higher education and Indian tribes and tribal organizations.

Program Authority: 29 U.S.C. 761(a), 762(a) and 762(b)(5).

Application Notices for Fiscal Year 1993, Knowledge Dissemination and Utilization, CFDA No. 84.133D

Funding Priority	Deadline for transmittal of applications	Estimated no. of awards	Estimated size of awards (per year)	Project period (months)
Regional Information, Exchange (RIE)	02/23/93	2	$200,000	60

Program Title: Rehabilitation Research Fellowships.

CFDA Number: 84.133F.

Purpose: The purpose of this program is to build research capacity by providing support to highly qualified individuals to perform research on the rehabilitation of disabled persons.

Selection Criteria: The Secretary evaluates applications for a Fellowship according to the following criteria in 34 CFR 356.30.

(a) Quality and level of formal education, previous work experience, and recommendations of present or former supervisors or colleagues that include an indication of the applicant's ability to work creatively in scientific research; and

(b) The quality of a research proposal of no more than 12 pages containing the following information:

(1) The importance of the problem to be investigated to the purpose of the Act and the mission of Institute.

(2) The research hypotheses or related objectives and the methodology and design to be followed.

(3) Assurance of the availability of any necessary data resources, equipment, or institutional support, including technical consultation and support where appropriate, required to carry out the proposed activity.

Eligible Applicants: Only individuals are eligible to apply for research fellowships under this program.

Program Authority: 29 U.S.C. 761a(d).

Application Notices for Fiscal Year 1993

CFDA no.	Program title	Deadline for transmittal of applications	Estimated no. of awards	Estimated size of awards (per year)	Project period (months)
84.133F	Rehabilitation Research Fellowships	10/05/92	10	$40,000	12

Program Title: Field-Initiated Research.

CFDA Number: 84.133G.

Purpose: This program is designed to encourage eligible parties to originate valuable ideas for research and demonstration, development, or knowledge dissemination projects to further the purposes of the Institute; and (b) to support research and demonstration, development, or knowledge dissemination projects, as described in 34 CFR 357.10, that address important activities not supported by Institute-funded research or that complement that research in a promising way.

Invitational Priorities: The Secretary is particularly interested in applications that meet one of the following invitational priorities. However, under 34 CFR 75.105(c)(1) an application that meets an invitational priority does not receive competitive or absolute preference over other applications. The invitational priorities are:

(1) Studies of the effects of childhood trauma on maturation and the developmental process and the implications for rehabilitation services;

(2) Development of techniques to evaluate readiness to return to work after acute myocardial infarction or invasive cardiac procedures;

(3) Development of a miniaturized, unabridged electronic Braille dictionary;

(4) Development of miniature electronic device to accommodate severe handwriting deficits;

(5) Studies of applications of Positron Emission Tomography (PET) imaging to increase understanding of the underlying biological basis for certain disabilities;

(6) Studies of the use of lubricant-impregnated composite materials for improving durability and reliability of orthoses and prostheses;

(7) Studies of the value of new engineering coating materials in improving the appearance of prostheses and orthoses;

(8) Development of Computer-Aided Design/Computer-Aided Manufacture (CAD/CAM) programs for designing accessible buildings to meet the requirement of the Americans with Disabilities Act;

(9) Studies of the use of augmentative communication devices and other assistive technology to enhance literacy in individuals with various types of disabilities

(10) Development of new models of rehabilitation counselor education;

(11) Studies of model practices for reasonable accommodation at the workplace for individuals with long-term mental illness;

(12) Development of vocational rehabilitation models for persons with diabetes who are blind;

(13) Development of strategies for Independent Living Centers to attain economic self-reliance;

(14) Studies of the use of technology in exercise interventions for individuals who have had strokes. *Selection Criteria:* The Secretary evaluates applications under the Field-Initiated Research Program in accordance with 34 CFR 357.32.

(a) *Importance of the problem.* (20 points) The Secretary reviews each application to determine the extent to which—

(1) The proposed project addresses a problem that is significant to persons with disabilities or to those who provide services to them; and

(2) The proposed project is likely to produce new and useful knowledge, techniques, or devices that will develop or disseminate solutions to problems confronting persons with disabilities.

(b) *Design of the project.* (45 points)

(1) The Secretary reviews each application for a research and demonstration project to determine the extent to which—

(i) The review of the literature is appropriate and indicates familiarity with the relevant current research;

(ii) The research hypotheses are theoretically sound and based on current knowledge;

(iii) The sample populations are adequate and appropriately selected;

(iv) The data collection instruments and methods are appropriate and likely to be successful;

(v) The data analysis measures are appropriate; and

(vi) The application discusses the anticipated research results and demonstrates how those results would satisfy the original hypotheses.

(2) The Secretary reviews each application for a knowledge dissemination project to determine the extent to which—

(i) The need for the information has been demonstrated;

(ii) The target populations are appropriately specified;

(iii) The dissemination methods are appropriate to the target population;

(iv) The materials for dissemination are prepared in media accessible to the target population;

(v) There are adequate means of documenting and evaluating the effectiveness of the dissemination activity.

(3) The Secretary reviews each application for a development project to determine the extent to which—

(i) The proposed project will use the most effective and appropriate technology available in developing the new device or technique;

(ii) The proposed development is based on a sound conceptual model that demonstrates an awareness of the state-of-the-art in technology;

(iii) Devices or techniques will be developed and tested in an appropriate environment;

(iv) The applicant considers the cost-effectiveness and usefulness of the device or technique to be developed for persons with disabilities; and

(v) The applicant discusses the potential for commercial or private manufacture, marketing, and distribution of the product.

(c) *Personnel.* (20 points) The Secretary reviews each application to determine the extent to which—

(1) The key personnel have adequate training and experience in the required discipline to conduct the proposed activities;

(2) The allotment of staff time is adequate to accomplish the proposed activities; and

(3) The applicant ensures that personnel are selected for employment without regard to race, color, national origin, gender, age, or handicapping condition.

(d) *Management and evaluation.* (15 points) The Secretary reviews each application to determine the extent to which—

(1) The resources of the applicant are adequate, appropriate, and accessible to individuals with disabilities;

(2) The proposed budget is adequate and appropriate for the activities to be carried out;

(3) There is a plan, appropriate to the type of field-initiated project, to evaluate the effectiveness of the project in accomplishing its goals and objectives;

(4) The applicant provides a plan of operations, appropriate to the type of field-initiated project, indicating that it will achieve the project objectives in a timely and effective manner; and

(5) Appropriate collaboration with other agencies is assured.

Eligible Applicants: Parties eligible to apply for grants under this program are State and public agencies or organizations, private agencies or organizations, institutions of higher education and Indian tribes and tribal organizations.

Program Authority: 29 U.S.C. 760–762.

APPLICATION NOTICES FOR FISCAL YEAR 1993

CFDA No.	Program title	Deadline for transmittal of applications	Estimated No. of awards	Estimated size of awards (per year)	Project period (months)
84.133G	Field-Initiated Research	10/5/92	20	$125,000	36

Program Title: Research Training and Career Development Program.

CFDA Number: 84.133P.

Purpose: The purpose of this program is to expand capability in the field of rehabilitation research by supporting projects that provide advanced training in rehabilitation research. These projects provide research training and experience at an advanced level to individuals with doctorates or similar advanced degrees who have clinical or other relevant experience, including experience in management or basic science research, in fields pertinent to rehabilitation, in order to quality those individuals to conduct independent research on problems related to disability and rehabilitation.

Priorities: Under 34 CFR 75.105(c)(2)(ii), applications that meet these absolute priorities are selected by the Secretary over applications of comparable merit that do not meet the priorities.

Specific priorities for this program are contained in the program regulations at 34 CFR 360.32. Each year, the Secretary may announce priorities to support research training in the following areas listed in the regulations:

Absolute Priority 1—Rehabilitation Counseling

(1) Miscellaneous clinical or technical fields, such as rehabilitation counseling; social work; law; social and behavioral sciences; gerontology; or demographics.

Absolute Priority 2—Rehabilitation Engineering

Engineering and rehabilitation technology fields, such as prosthetics and orthotics; engineering; design; architecture; computer applications; or biomechanics.

Selection Criteria: The Secretary uses the following criteria in 34 CFR 360.31 to evaluate application under this program.

(a) *Importance and potential contribution.* (20 points) The Secretary reviews each application to determine to what degree—

(1) The applicant is responsive to any priority established under § 360.32;

(2) The applicant proposes to provide training in a rehabilitation discipline or area of study in which there is a shortage of qualified researchers, or to provide training to a trainee population in which there is a need for more qualified researchers, such as clinicians in rural areas, or clinicians who are directly experienced with underserved populations; and

(3) The applicant is likely to make a significant increase in the number of trained rehabilitation researchers.

(b) *Quality of proposed training program.* (40 points) The Secretary reviews each application to determine to what degree—

(1) The applicant's proposed recruitment program is likely to be effective in recruiting highly qualified trainees;

(2) The proposed didactic and classroom training programs emphasize scientific methodology are multidisciplinary, comprehensive, and appropriate to the level of the trainees, and are likely to produce qualified independent researchers;

(3) The quality and extent of the academic mentorship, guidance, and supervision to be provided to each individual trainee are of a high level and are likely to produce highly qualified researchers;

(4) The type, extent, and quality of the proposed clinical and laboratory research experience, including the opportunity to participate in research on meaningful topics at an advanced level, are likely to develop individuals with the capacity to perform independent research; and

(5) The opportunities for collegial and collaborative activities, exposure to outstanding scientists in the field, and opportunities to participate in the preparation of scholarly or scientific publications and presentations are extensive and appropriate.

(c) *Personnel and resources committed to the project.* (30 points) the Secretary evaluates each application to determine to what degree—

(1) The activities of the project will be implemented by sufficient and qualified staff who are outstanding scientists in the field;

(2) The project director and other key staff are experienced in the delivery of advanced research as well as knowledgeable about the methodology and literature of pertinent subject areas;

(3) All required disciplines are effectively included; and

(4) The applicant possesses the appropriate facilities, laboratories, and access to clinical populations and organizations representing persons with disabilities to support the conduct of advanced clinical rehabilitation research.

(d) *Management and operating plans.* (10 points) The Secretary evaluates each application to determine to what degree—

(1) There is an effective plan of operation that ensures proper and efficient administration of the project;

(2) There is an effective plan for collaboration with other institutions of higher education and organizations whose participation is necessary to ensure effective classroom and clinical research training;

(3) The applicant, as part of its nondiscriminatory employment practices, will ensure that its personnel are selected without regard to race, color, national origin, gender, age or handicapping condition;

(4) The applicant has provided an adequate plan for the use of facilities, resources, supplies and equipment;

(5) The budget for the project is reasonable and adequate to support the proposed activities; and

(6) The applicant provides an appropriate plan for the evaluation of all phases of the project.

Eligible Applicants: Institution of higher education are eligible to receive assistance under this program.

Program Authority: 29 U.S.C. 761a(k), 761(i)(l).

APPLICATION NOTICES FOR FISCAL YEAR 1993 RESEARCH TRAINING AND CAREER DEVELOPMENT CFDA NO. 84.133P

Funding priority	Deadline for transmittal of applications	Estimated Number of awards	Estimated size of awards (per year)	Project period (months)
Rehabilitation Counseling	10/5/92	2	$175,000	60
Rehabilitation Engineering	10/5/92	1	$175,000	60

FURTHER INFORMATION CONTACT: The National Institute on Disability and Rehabilitation Research, 400 Maryland Avenue, SW., Washington, DC 20202-2601. Telephone: (202) 205-9141; deaf and hearing impaired individuals may call (202) 205-5474 for TDD services.

Program Authority: 29 U.S.C. 760-762.

Dated: August 11, 1992.

Robert R. Davila,

Assistant Secretary, Office of Special Education, and Rehabilitative Services.

Instructions for Transmittal of Applications

(a) If an applicant wants to apply for a grant, the applicant shall—

(1) Mail the original and two copies of the application on or before the deadline date to: U.S. Department of Education, Application Control Center, Attention: (CFDA # [Applicant must insert number and letter]), Washington, DC 20202-4725, or

(2) Hand deliver the original and two copies of the application by 4:30 p.m. [Washington, DC time] on the deadline date to: U.S. Department of Education, Application Control Center, Attention: (CFDA # [Applicant must insert number and letter]), room #3633, Regional Office Building #3, 7th and D Streets SW., Washington, DC.

(b) An applicant must show one of the following as proof of mailing:

(1) A legibly dated U.S. Postal Service postmark.

(2) A legible mail receipt with the date of mailing stamped by the U.S. Postal Service.

(3) A dated shipping label, invoice, or receipt from a commercial carrier.

(4) Any other proof of mailing acceptable to the Secretary.

(c) If an application is mailed through the U.S. Postal Service, the Secretary does not accept either of the following as proof of mailing:

(1) A private metered postmark.

(2) A mail receipt that is not dated by the U.S. Postal Service.

Notes: (1) The U.S. Postal Service does not uniformly provide a dated postmark. Before relying on this method, an applicant should check with its local post office.

(2) An applicant wishing to know that its application has been received by the Department must include with the application a stamped self-addressed postcard containing the CFDA number and title of this program.

(3) The applicant must indicate on the envelope and—if not provided by the Department—in Item 10 of the Application for Federal Assistance (Standard Form 424) the CFDA number—and letter, if any—of the competition under which the application is being submitted.

Application Forms and Instructions

The appendix to this application is divided into four parts. These parts are organized in the same manner that the submitted application should be organized. These parts are as follows:

Part I: Application for Federal Assistance (Standard Form 424 (Rev. 4-88)) and instructions.

Part II: Budget Form—Non-Construction Programs (Standard Form 424A) and instructions.

Part III: Application Narrative.

Additional Materials

Estimated Public Reporting Burden.

Assurances—Non-Construction Programs (Standard Form 424B).

Certification Regarding Lobbying; Debarment, Suspension, and Other Responsibility Matters; and Drug-Free Workplace Requirements (ED 80-0013).

Certification Regarding Department, Suspension, Ineligibility and Voluntary Exclusion: Lower Tier Covered Transactions (ED Form 80-0014 and instructions.

Note: ED Form 80-0014 is intended for the use of primary participants and should not be transmitted to the Department.)

Disclosure of Lobbying Activities (Standard Form LLL (if applicable) and instruction; and Disclosure of Lobbying Activities Continuation Sheet (Standard Form LLL-A).

An applicant may submit information on a photostatic copy of the application and budget forms, the assurances, and the certifications. However, the application form, the assurances, and the certification must each have an original signature. No grant may be awarded unless a completed application form has been received.

BILLING CODE 4000-01-M

OMB Approval No. 0348-0043

APPLICATION FOR FEDERAL ASSISTANCE

2. DATE SUBMITTED	Applicant Identifier
3. DATE RECEIVED BY STATE	State Application Identifier
4. DATE RECEIVED BY FEDERAL AGENCY	Federal Identifier

1. TYPE OF SUBMISSION:
Application: ☐ Construction ☐ Non-Construction
Preapplication: ☐ Construction ☐ Non-Construction

5. APPLICANT INFORMATION

Legal Name:

Organizational Unit:

Address (give city, county, state, and zip code):

Name and telephone number of the person to be contacted on matters involving this application (give area code)

6. EMPLOYER IDENTIFICATION NUMBER (EIN): ☐☐ – ☐☐☐☐☐☐☐

7. TYPE OF APPLICANT: (enter appropriate letter in box) ☐
A. State
B. County
C. Municipal
D. Township
E. Interstate
F. Intermunicipal
G. Special District
H. Independent School Dist.
I. State Controlled Institution of Higher Learning
J. Private University
K. Indian Tribe
L. Individual
M. Profit Organization
N. Other (Specify): _____

8. TYPE OF APPLICATION:
☐ New ☐ Continuation ☐ Revision
If Revision, enter appropriate letter(s) in box(es): ☐ ☐
A. Increase Award B. Decrease Award C. Increase Duration
D. Decrease Duration Other (specify):
_____

9. NAME OF FEDERAL AGENCY:

10. CATALOG OF FEDERAL DOMESTIC ASSISTANCE NUMBER: ☐☐ . ☐☐☐
TITLE:

11. DESCRIPTIVE TITLE OF APPLICANT'S PROJECT:

12. AREAS AFFECTED BY PROJECT (cities, counties, states, etc.):

13. PROPOSED PROJECT:

Start Date	Ending Date

14. CONGRESSIONAL DISTRICTS OF:

a. Applicant	b. Project

15. ESTIMATED FUNDING:

a. Federal	$ .00
b. Applicant	$ .00
c. State	$ .00
d. Local	$ .00
e. Other	$ .00
f. Program Income	$ .00
g. TOTAL	$ .00

16. IS APPLICATION SUBJECT TO REVIEW BY STATE EXECUTIVE ORDER 12372 PROCESS?
a. YES THIS PREAPPLICATION/APPLICATION WAS MADE AVAILABLE TO THE STATE EXECUTIVE ORDER 12372 PROCESS FOR REVIEW ON
DATE _____
b. NO ☐ PROGRAM IS NOT COVERED BY E.O. 12372
☐ OR PROGRAM HAS NOT BEEN SELECTED BY STATE FOR REVIEW

17. IS THE APPLICANT DELINQUENT ON ANY FEDERAL DEBT?
☐ Yes If "Yes," attach an explanation. ☐ No

18. TO THE BEST OF MY KNOWLEDGE AND BELIEF, ALL DATA IN THIS APPLICATION/PREAPPLICATION ARE TRUE AND CORRECT, THE DOCUMENT HAS BEEN DULY AUTHORIZED BY THE GOVERNING BODY OF THE APPLICANT AND THE APPLICANT WILL COMPLY WITH THE ATTACHED ASSURANCES IF THE ASSISTANCE IS AWARDED

a. Typed Name of Authorized Representative	b. Title	c. Telephone number
d. Signature of Authorized Representative		e. Date Signed

Previous Editions Not Usable

Standard Form 424 (REV 4-88)
Prescribed by OMB Circular A-102

Authorized for Local Reproduction

INSTRUCTIONS FOR THE SF 424

This is a standard form used by applicants as a required facesheet for preapplications and applications submitted for Federal assistance. It will be used by Federal agencies to obtain applicant certification that States which have established a review and comment procedure in response to Executive Order 12372 and have selected the program to be included in their process, have been given an opportunity to review the applicant's submission.

Item: Entry:

1. Self-explanatory.

2. Date application submitted to Federal agency (or State if applicable) & applicant's control number (if applicable).

3. State use only (if applicable).

4. If this application is to continue or revise an existing award, enter present Federal identifier number. If for a new project, leave blank.

5. Legal name of applicant, name of primary organizational unit which will undertake the assistance activity, complete address of the applicant, and name and telephone number of the person to contact on matters related to this application.

6. Enter Employer Identification Number (EIN) as assigned by the Internal Revenue Service.

7. Enter the appropriate letter in the space provided.

8. Check appropriate box and enter appropriate letter(s) in the space(s) provided:
   - "New" means a new assistance award.
   - "Continuation" means an extension for an additional funding/budget period for a project with a projected completion date.
   - "Revision" means any change in the Federal Government's financial obligation or contingent liability from an existing obligation.

9. Name of Federal agency from which assistance is being requested with this application.

10. Use the Catalog of Federal Domestic Assistance number and title of the program under which assistance is requested.

11. Enter a brief descriptive title of the project. if more than one program is involved, you should append an explanation on a separate sheet. If appropriate (e.g., construction or real property projects), attach a map showing project location. For preapplications, use a separate sheet to provide a summary description of this project.

Item: Entry:

12. List only the largest political entities affected (e.g., State, counties, cities).

13. Self-explanatory.

14. List the applicant's Congressional District and any District(s) affected by the program or project.

15. Amount requested or to be contributed during the first funding/budget period by each contributor. Value of in-kind contributions should be included on appropriate lines as applicable. If the action will result in a dollar change to an existing award, indicate *only* the amount of the change. For decreases, enclose the amounts in parentheses. If both basic and supplemental amounts are included, show breakdown on an attached sheet. For multiple program funding, use totals and show breakdown using same categories as item 15.

16. Applicants should contact the State Single Point of Contact (SPOC) for Federal Executive Order 12372 to determine whether the application is subject to the State intergovernmental review process.

17. This question applies to the applicant organization, not the person who signs as the authorized representative. Categories of debt include delinquent audit disallowances, loans and taxes.

18. To be signed by the authorized representative of the applicant. A copy of the governing body's authorization for you to sign this application as official representative must be on file in the applicant's office. (Certain Federal agencies may require that this authorization be submitted as part of the application.)

OMB Approval No. 0348-0044

BUDGET INFORMATION — Non-Construction Programs

SECTION A – BUDGET SUMMARY

Grant Program Function or Activity (a)	Catalog of Federal Domestic Assistance Number (b)	Estimated Unobligated Funds		New or Revised Budget		
		Federal (c)	Non-Federal (d)	Federal (e)	Non-Federal (f)	Total (g)
1.		$	$	$	$	$
2.						
3.						
4.						
5. TOTALS		$	$	$	$	$

SECTION B – BUDGET CATEGORIES

6 Object Class Categories	GRANT PROGRAM, FUNCTION OR ACTIVITY				Total (5)
	(1)	(2)	(3)	(4)	
a. Personnel	$	$	$	$	$
b. Fringe Benefits					
c. Travel					
d. Equipment					
e. Supplies					
f. Contractual					
g. Construction					
h. Other					
i. Total Direct Charges (sum of 6a - 6h)					
j. Indirect Charges					
k. TOTALS (sum of 6i and 6j)	$	$	$	$	$
7. Program Income	$	$	$	$	$

Authorized for Local Reproduction

Standard Form 424A (4-88)
Prescribed by OMB Circular A-102

SECTION C - NON-FEDERAL RESOURCES

(a) Grant Program	(b) Applicant	(c) State	(d) Other Sources	(e) TOTALS
8.	$	$	$	$
9.				
10.				
11.				
12. TOTALS (sum of lines 8 and 11)	$	$	$	$

SECTION D - FORECASTED CASH NEEDS

	Total for 1st Year	1st Quarter	2nd Quarter	3rd Quarter	4th Quarter
13. Federal	$	$	$	$	$
14. NonFederal					
15. TOTAL (sum of lines 13 and 14)	$	$	$	$	$

SECTION E - BUDGET ESTIMATES OF FEDERAL FUNDS NEEDED FOR BALANCE OF THE PROJECT

(a) Grant Program	FUTURE FUNDING PERIODS (Years)			
	(b) First	(c) Second	(d) Third	(e) Fourth
16.	$	$	$	$
17.				
18.				
19.				
20. TOTALS (sum of lines 16 -19)	$	$	$	$

SECTION F - OTHER BUDGET INFORMATION

(Attach additional Sheets if Necessary)

21. Direct Charges:	22. Indirect Charges:

23. Remarks

SF 424A (4-88) Page 2
Prescribed by OMB Circular A-102

Authorized for Local Reproduction

INSTRUCTIONS FOR THE SF-424A

General Instructions

This form is designed so that application can be made for funds from one or more grant programs. In preparing the budget, adhere to any existing Federal grantor agency guidelines which prescribe how and whether budgeted amounts should be separately shown for different functions or activities within the program. For some programs, grantor agencies may require budgets to be separately shown by function or activity. For other programs, grantor agencies may require a breakdown by function or activity. Sections A,B,C, and D should include budget estimates for the whole project except when applying for assistance which requires Federal authorization in annual or other funding period increments. In the latter case, Sections A,B, C, and D should provide the budget for the first budget period (usually a year) and Section E should present the need for Federal assistance in the subsequent budget periods. All applications should contain a breakdown by the object class categories shown in Lines a-k of Section B.

Section A. Budget Summary
Lines 1-4, Columns (a) and (b)

For applications pertaining to a *single* Federal grant program (Federal Domestic Assistance Catalog number) and *not requiring* a functional or activity breakdown, enter on Line 1 under Column (a) the catalog program title and the catalog number in Column (b).

For applications pertaining to a *single* program *requiring* budget amounts by multiple functions or activities, enter the name of each activity or function on each line in Column (a), and enter the catalog number in Column (b). For applications pertaining to multiple programs where none of the programs require a breakdown by function or activity, enter the catalog program title on each line in *Column* (a) and the respective catalog number on each line in Column (b).

For applications pertaining to *multiple* programs where one or more programs *require* a breakdown by function or activity, prepare a separate sheet for each program requiring the breakdown. Additional sheets should be used when one form does not provide adequate space for all breakdown of data required. However, when more than one sheet is used, the first page should provide the summary totals by programs.

Lines 1-4, Columns (c) through (g.)

For new applications, leave Columns (c) and (d) blank. For each line entry in Columns (a) and (b), enter in Columns (e), (f), and (g) the appropriate amounts of funds needed to support the project for the first funding period (usually a year).

Lines 1-4, Columns (c) through (g.) (continued)

For continuing grant program applications, submit these forms before the end of each funding period as required by the grantor agency. Enter in Columns (c) and (d) the estimated amounts of funds which will remain unobligated at the end of the grant funding period only if the Federal grantor agency instructions provide for this. Otherwise, leave these columns blank. Enter in columns (e) and (f) the amounts of funds needed for the upcoming period. The amount(s) in Column (g) should be the sum of amounts in Columns (e) and (f).

For supplemental grants and changes to existing grants, do not use Columns (c) and (d). Enter in Column (e) the amount of the increase or decrease of Federal funds and enter in Column (f) the amount of the increase or decrease of non-Federal funds. In Column (g) enter the new total budgeted amount (Federal and non-Federal) which includes the total previous authorized budgeted amounts plus or minus, as appropriate, the amounts shown in Columns (e) and (f). The amount(s) in Column (g) should not equal the sum of amounts in Columns (e) and (f).

Line 5 — Show the totals for all columns used.

Section B Budget Categories

In the column headings (1) through (4), enter the titles of the same programs, functions, and activities shown on Lines 1-4, Column (a), Section A. When additional sheets are prepared for Section A, provide similar column headings on each sheet. For each program, function or activity, fill in the total requirements for funds (both Federal and non-Federal) by object class categories.

Lines 6a-i — Show the totals of Lines 6a to 6h in each column.

Line 6j – Show the amount of indirect cost.

Line 6k – Enter the total of amounts on Lines 6i and 6j. For all applications for new grants and continuation grants the total amount in column (5), Line 6k, should be the same as the total amount shown in Section A, Column (g), Line 5. For supplemental grants and changes to grants, the total amount of the increase or decrease as shown in Columns (1)-(4), Line 6k should be the same as the sum of the amounts in Section A, Columns (e) and (f) on Line 5.

INSTRUCTIONS FOR THE SF-424A *(continued)*

Line 7 – Enter the estimated amount of income, if any, expected to be generated from this project. Do not add or subtract this amount from the total project amount. Show under the program narrative statement the nature and source of income. The estimated amount of program income may be considered by the federal grantor agency in determining the total amount of the grant.

Section C. Non-Federal-Resources

Lines 8-11 – Enter amounts of non-Federal resources that will be used on the grant. If in-kind contributions are included, provide a brief explanation on a separate sheet.

Column (a) – Enter the program titles identical to Column (a), Section A. A breakdown by function or activity is not necessary.

Column (b) – Enter the contribution to be made by the applicant.

Column (c) – Enter the amount of the State's cash and in-kind contribution if the applicant is not a State or State agency. Applicants which are a State or State agencies should leave this column blank.

Column (d) – Enter the amount of cash and in-kind contributions to be made from all other sources.

Column (e) – Enter totals of Columns (b), (c), and (d).

Line 12 — Enter the total for each of Columns (b)-(e). The amount in Column (e) should be equal to the amount on Line 5, Column (f), Section A.

Section D. Forecasted Cash Needs

Line 13 – Enter the amount of cash needed by quarter from the grantor agency during the first year.

BILLING CODE 4000-01-C

Line 14 – Enter the amount of cash from all other sources needed by quarter during the first year.

Line 15 – Enter the totals of amounts on Lines 13 and 14.

Section E. Budget Estimates of Federal Funds Needed for Balance of the Project

Lines 16 - 19 – Enter in Column (a) the same grant program titles shown in Column (a), Section A. A breakdown by function or activity is not necessary. For new applications and continuation grant applications, enter in the proper columns amounts of Federal funds which will be needed to complete the program or project over the succeeding funding periods (usually in years). This section need not be completed for revisions (amendments, changes, or supplements) to funds for the current year of existing grants.

If more than four lines are needed to list the program titles, submit additional schedules as necessary.

Line 20 – Enter the total for each of the Columns (b)-(e). When additional schedules are prepared for this Section, annotate accordingly and show the overall totals on this line.

Section F. Other Budget Information

Line 21 – Use this space to explain amounts for individual direct object-class cost categories that may appear to be out of the ordinary or to explain the details as required by the Federal grantor agency.

Line 22 – Enter the type of indirect rate (provisional, predetermined, final or fixed) that will be in effect during the funding period, the estimated amount of the base to which the rate is applied, and the total indirect expense.

Line 23 – Provide any other explanations or comments deemed necessary.

Instructions for Completion of Part III, National Institute on Disability and Rehabilitation Research, Project Narrative for New Applications

The narrative should include the basic information described below and, excluding résumés of key personnel, should be limited to:

• 40 pages for applications under the Knowledge Dissemination and Utilization, Field-Initiated Research and Research Training and Career Development Programs

• 12 pages, which is the regulatory limit, for applications under the Fellowship Program

The narrative for new applications may be organized under the major headings in the regulations governing the specific programs. The applicant must respond to the selection criteria of each regulation part listed below.

Regulations governing Knowledge Dissemination and Utilization are included in 34 CFR part 355.

Regulations governing Rehabilitation Research Fellowships are included in 34 CFR part 356.

Regulations governing Field-Initiated Projects are included in 34 CFR part 357.

Regulations governing the Research Training and Career Development Program are included in 34 CFR part 360.

Administrative Regulations (EDGAR), 34 CFR parts 74, 75, 77, 80, 81, 82, 85, and 86.

Knowledge Dissemination and Utilization (84.133B)

Research Training Grants (84.133P).

Public Reporting burden for these collections of information is estimated to average 30 hours per response, including the time for reviewing instructions, searching existing data sources, gathering and maintaining the data needed, and completing and reviewing the collection of information.

Send comments regarding this burden estimate or any other aspect of these collections of information, including suggestions for reducing this burden, to: U.S. Department of Education, Information Management and Compliance Division, Washington, DC 20202–4651; and to the Office of Management and Budget, Paperwork Reduction Project 1820–0027, Washington, DC 20502.

Field Initiated Research (84.133G) Fellowships (84.133F)

Public reporting burden for these collections of information is estimated to average 20 hours per response, including the time for reviewing instructions, searching existing data sources, gathering and maintaining the data needed, and completing and reviewing the collection of information.

(Information collection approved under OMB control number 1820–0027. Expiration date: July 31, 1995))

BILLING CODE 4000–01–M

OMB Approval No. 0348-0040

ASSURANCES — NON-CONSTRUCTION PROGRAMS

Note: Certain of these assurances may not be applicable to your project or program. If you have questions, please contact the awarding agency. Further, certain Federal awarding agencies may require applicants to certify to additional assurances. If such is the case, you will be notified.

As the duly authorized representative of the applicant I certify that the applicant:

1. Has the legal authority to apply for Federal assistance, and the institutional, managerial and financial capability (including funds sufficient to pay the non-Federal share of project costs) to ensure proper planning, management and completion of the project described in this application.

2. Will give the awarding agency, the Comptroller General of the United States, and if appropriate, the State, through any authorized representative, access to and the right to examine all records, books, papers, or documents related to the award; and will establish a proper accounting system in accordance with generally accepted accounting standards or agency directives.

3. Will establish safeguards to prohibit employees from using their positions for a purpose that constitutes or presents the appearance of personal or organizational conflict of interest, or personal gain.

4. Will initiate and complete the work within the applicable time frame after receipt of approval of the awarding agency.

5. Will comply with the Intergovernmental Personnel Act of 1970 (42 U.S.C. §§ 4728-4763) relating to prescribed standards for merit systems for programs funded under one of the nineteen statutes or regulations specified in Appendix A of OPM's Standards for a Merit System of Personnel Administration (5 C.F.R. 900, Subpart F).

6. Will comply with all Federal statutes relating to nondiscrimination. These include but are not limited to: (a) Title VI of the Civil Rights Act of 1964 (P.L. 88-352) which prohibits discrimination on the basis of race, color or national origin; (b) Title IX of the Education Amendments of 1972, as amended (20 U.S.C. §§ 1681-1683, and 1685-1686), which prohibits discrimination on the basis of sex; (c) Section 504 of the Rehabilitation Act of 1973, as amended (29 U.S.C. § 794), which prohibits discrimination on the basis of handicaps; (d) the Age Discrimination Act of 1975, as amended (42 U.S.C.§§ 6101-6107), which prohibits discrimination on the basis of age; (e) the Drug Abuse Office and Treatment Act of 1972 (P.L. 92-255), as amended, relating to nondiscrimination on the basis of drug abuse; (f) the Comprehensive Alcohol Abuse and Alcoholism Prevention, Treatment and Rehabilitation Act of 1970 (P.L. 91-616), as amended, relating to nondiscrimination on the basis of alcohol abuse or alcoholism; (g) §§ 523 and 527 of the Public Health Service Act of 1912 (42 U.S.C. 290 dd-3 and 290 ee-3), as amended, relating to confidentiality of alcohol and drug abuse patient records; (h) Title VIII of the Civil Rights Act of 1968 (42 U.S.C. § 3601 et seq.), as amended, relating to nondiscrimination in the sale, rental or financing of housing; (i) any other nondiscrimination provisions in the specific statute(s) under which application for Federal assistance is being made; and (j) the requirements of any other nondiscrimination statute(s) which may apply to the application.

7. Will comply, or has already complied, with the requirements of Titles II and III of the Uniform Relocation Assistance and Real Property Acquisition Policies Act of 1970 (P.L. 91-646) which provide for fair and equitable treatment of persons displaced or whose property is acquired as a result of Federal or federally assisted programs. These requirements apply to all interests in real property acquired for project purposes regardless of Federal participation in purchases.

8. Will comply with the provisions of the Hatch Act (5 U.S.C. §§ 1501-1508 and 7324-7328) which limit the political activities of employees whose principal employment activities are funded in whole or in part with Federal funds.

9. Will comply, as applicable, with the provisions of the Davis-Bacon Act (40 U.S.C. §§ 276a to 276a-7), the Copeland Act (40 U.S.C. § 276c and 18 U.S.C. §§ 874), and the Contract Work Hours and Safety Standards Act (40 U.S.C. §§ 327-333), regarding labor standards for federally assisted construction subagreements.

Standard Form 424B (4-88)
Prescribed by OMB Circular A-102

Authorized for Local Reproduction

10. Will comply, if applicable, with flood insurance purchase requirements of Section 102(a) of the Flood Disaster Protection Act of 1973 (P.L. 93-234) which requires recipients in a special flood hazard area to participate in the program andto purchase flood insurance if the total cost of insurable construction and acquisition is $10,000 or more.

11. Will comply with environmental standards which may be prescribed pursuant to the following: (a) institution of environmental quality control measures under the National Environmental Policy Act of 1969 (P.L. 91-190) and Executive Order (EO) 11514; (b) notification of violating facilities pursuant to EO 11738; (c) protection of wetlands pursuant to EO 11990; (d) evaluation of flood hazards in floodplains in accordance with EO 11988; (e) assurance of project consistency with the approved State management program developed under the Coastal Zone Management Act of 1972 (16 U.S.C. §§ 1451 et seq.); (f) conformity of Federal actions to State (Clear Air) Implementation Plans under Section 176(c) of the Clear Air Act of 1955, as amended (42 U.S.C. § 7401 et seq.); (g) protection of underground sources of drinking water under the Safe Drinking Water Act of 1974, as amended, (P.L. 93-523); and (h) protection of endangered species under the Endangered Species Act of 1973, as amended, (P.L. 93-205).

12. Will comply with the Wild and Scenic Rivers Act of 1968 (16 U.S.C. §§ 1271 et seq.) related to protecting components or potential components of the national wild and scenic rivers system.

13. Will assist the awarding agency in assuring compliance with Section 106 of the National Historic Preservation Act of 1966, as amended (16 U.S.C. 470), EO 11593 (identification and protection of historic properties), and the Archaeological and Historic Preservation Act of 1974 (16 U.S.C. 469a-1 et seq.).

14. Will comply with P.L. 93-348 regarding the protection of human subjects involved in research, development, and related activities supported by this award of assistance.

15. Will comply with the Laboratory Animal Welfare Act of 1966 (P.L. 89-544, as amended, 7 U.S.C. 2131 et seq.) pertaining to the care, handling, and treatment of warm blooded animals held for research, teaching, or other activities supported by this award of assistance.

16. Will comply with the Lead-Based Paint Poisoning Prevention Act (42 U.S.C. §§ 4801 et seq.) which prohibits the use of lead based paint in construction or rehabilitation of residence structures.

17. Will cause to be performed the required financial and compliance audits in accordance with the Single Audit Act of 1984.

18. Will comply with all applicable requirements of all other Federal laws, executive orders, regulations and policies governing this program.

SIGNATURE OF AUTHORIZED CERTIFYING OFFICIAL	TITLE
APPLICANT ORGANIZATION	DATE SUBMITTED

SF 424B (4-88) Back

CERTIFICATIONS REGARDING LOBBYING; DEBARMENT, SUSPENSION AND OTHER RESPONSIBILITY MATTERS; AND DRUG-FREE WORKPLACE REQUIREMENTS

Applicants should refer to the regulations cited below to determine the certification to which they are required to attest. Applicants should also review the instructions for certification included in the regulations before completing this form. Signature of this form provides for compliance with certification requirements under 34 CFR Part 82, "New Restrictions on Lobbying," and 34 CFR Part 85, "Government-wide Debarment and Suspension (Nonprocurement) and Government-wide Requirements for Drug-Free Workplace (Grants)." The certifications shall be treated as a material representation of fact upon which reliance will be placed when the Department of Education determines to award the covered transaction, grant, or cooperative agreement.

1. LOBBYING

As required by Section 1352, Title 31 of the U.S. Code, and implemented at 34 CFR Part 82, for persons entering into a grant or cooperative agreement over $100,000, as defined at 34 CFR Part 82, Sections 82.105 and 82.110, the applicant certifies that:

(a) No Federal appropriated funds have been paid or will be paid, by or on behalf of the undersigned, to any person for influencing or attempting to influence an officer or employee of any agency, a Member of Congress, an officer or employee of Congress, or an employee of a Member of Congress in connection with the making of any Federal grant, the entering into of any cooperative agreement, and the extension, continuation, renewal, amendment, or modification of any Federal grant or cooperative agreement;

(b) If any funds other than Federal appropriated funds have been paid or will be paid to any person for influencing or attempting to influence an officer or employee of any agency, a Member of Congress, an officer or employee of Congress, or an employee of a Member of Congress in connection with this Federal grant or cooperative agreement, the undersigned shall complete and submit Standard Form - LLL, "Disclosure Form to Report Lobbying," in accordance with its instructions;

(c) The undersigned shall require that the language of this certification be included in the award documents for all subawards at all tiers (including subgrants, contracts under grants and cooperative agreements, and subcontracts) and that all subrecipients shall certify and disclose accordingly.

2. DEBARMENT, SUSPENSION, AND OTHER RESPONSIBILITY MATTERS

As required by Executive Order 12549, Debarment and Suspension, and implemented at 34 CFR Part 85, for prospective participants in primary covered transactions, as defined at 34 CFR Part 85, Sections 85.105 and 85.110 --

A. The applicant certifies that it and its principals:

(a) Are not presently debarred, suspended, proposed for debarment, declared ineligible, or voluntarily excluded from covered transactions by any Federal department or agency;

(b) Have not within a three-year period preceding this application been convicted of or had a civil judgment rendered against them for commission of fraud or a criminal offense in connection with obtaining, attempting to obtain, or performing a public (Federal, State, or local) transaction or contract under a public transaction; violation of Federal or State antitrust statutes or commission of embezzlement, theft, forgery, bribery, falsification or destruction of records, making false statements, or receiving stolen property;

(c) Are not presently indicted for or otherwise criminally or civilly charged by a governmental entity (Federal, State, or local) with commission of any of the offenses enumerated in paragraph (1)(b) of this certification; and

(d) Have not within a three-year period preceding this application had one or more public transactions (Federal, State, or local) terminated for cause or default; and

B. Where the applicant is unable to certify to any of the statements in this certification, he or she shall attach an explanation to this application.

3. DRUG-FREE WORKPLACE (GRANTEES OTHER THAN INDIVIDUALS)

As required by the Drug-Free Workplace Act of 1988, and implemented at 34 CFR Part 85, Subpart F, for grantees, as defined at 34 CFR Part 85, Sections 85.605 and 85.610 --

A. The applicant certifies that it will or will continue to provide a drug-free workplace by:

(a) Publishing a statement notifying employees that the unlawful manufacture, distribution, dispensing, possession, or use of a controlled substance is prohibited in the grantee's workplace and specifying the actions that will be taken against employees for violation of such prohibition;

(b) Establishing an on-going drug-free awareness program to inform employees about--

(1) The dangers of drug abuse in the workplace;

(2) The grantee's policy of maintaining a drug-free workplace;

(3) Any available drug counseling, rehabilitation, and employee assistance programs; and

(4) The penalties that may be imposed upon employees for drug abuse violations occurring in the workplace;

(c) Making it a requirement that each employee to be engaged in the performance of the grant be given a copy of the statement required by paragraph (a);

(d) Notifying the employee in the statement required by paragraph (a) that, as a condition of employment under the grant, the employee will--

(1) Abide by the terms of the statement; and

(2) Notify the employer in writing of his or her conviction for a violation of a criminal drug statute occurring in the workplace no later than five calendar days after such conviction;

(e) Notifying the agency, in writing, within 10 calendar days after receiving notice under subparagraph (d)(2) from an employee or otherwise receiving actual notice of such conviction. Employers of convicted employees must provide notice, including position title, to: Director, Grants and Contracts Service, U.S. Department of Education, 400 Maryland Avenue, S.W. (Room 3124, GSA Regional Office

Building No. 3), Washington, DC 20202-4571. Notice shall include the identification number(s) of each affected grant;

(f) Taking one of the following actions, within 30 calendar days of receiving notice under subparagraph (d)(2), with respect to any employee who is so convicted—

(1) Taking appropriate personnel action against such an employee, up to and including termination, consistent with the requirements of the Rehabilitation Act of 1973, as amended; or

(2) Requiring such employee to participate satisfactorily in a drug abuse assistance or rehabilitation program approved for such purposes by a Federal, State, or local health, law enforcement, or other appropriate agency;

(g) Making a good faith effort to continue to maintain a drug-free workplace through implementation of paragraphs (a), (b), (c), (d), (e), and (f).

B. The grantee may insert in the space provided below the site(s) for the performance of work done in connection with the specific grant:

Place of Performance (Street address, city, county, state, zip code)

_____

_____

_____

Check ☐ if there are workplaces on file that are not identified here.

DRUG-FREE WORKPLACE (GRANTEES WHO ARE INDIVIDUALS)

As required by the Drug-Free Workplace Act of 1988, and implemented at 34 CFR Part 85, Subpart F, for grantees, as defined at 34 CFR Part 85, Sections 85.605 and 85.610 —

A. As a condition of the grant, I certify that I will not engage in the unlawful manufacture, distribution, dispensing, possession, or use of a controlled substance in conducting any activity with the grant; and

B. If convicted of a criminal drug offense resulting from a violation occurring during the conduct of any grant activity, I will report the conviction, in writing, within 10 calendar days of the conviction, to: Director, Grants and Contracts Service, U.S. Department of Education, 400 Maryland Avenue, S.W. (Room 3124, GSA Regional Office Building No. 3), Washington, DC 20202-4571. Notice shall include the identification number(s) of each affected grant.

As the duly authorized representative of the applicant, I hereby certify that the applicant will comply with the above certifications.

NAME OF APPLICANT	PR/AWARD NUMBER AND/OR PROJECT NAME
PRINTED NAME AND TITLE OF AUTHORIZED REPRESENTATIVE	
SIGNATURE	DATE

ED 80-0013, 6/90 (Replaces ED 80-0008, 12/89; ED Form GCS-008, (REV. 12/88); ED 80-0010, 5/90; and ED 80-0011, 5/90, which are obsolete)

Certification Regarding Debarment, Suspension, Ineligibility and Voluntary Exclusion -- Lower Tier Covered Transactions

This certification is required by the Department of Education regulations implementing Executive Order 12549, Debarment and Suspension, 34 CFR Part 85, for all lower tier transactions meeting the threshold and tier requirements stated at Section 85.110.

Instructions for Certification

1. By signing and submitting this proposal, the prospective lower tier participant is providing the certification set out below.

2. The certification in this clause is a material representation of fact upon which reliance was placed when this transaction was entered into. If it is later determined that the prospective lower tier participant knowingly rendered an erroneous certification, in addition to other remedies available to the Federal Government, the department or agency with which this transaction originated may pursue available remedies, including suspension and/or debarment.

3. The prospective lower tier participant shall provide immediate written notice to the person to which this proposal is submitted if at any time the prospective lower tier participant learns that its certification was erroneous when submitted or has become erroneous by reason of changed circumstances.

4. The terms "covered transaction," "debarred," "suspended," "ineligible," "lower tier covered transaction," "participant," "person," "primary covered transaction," "principal," "proposal," and "voluntarily excluded," as used in this clause, have the meanings set out in the Definitions and Coverage sections of rules implementing Executive Order 12549. You may contact the person to which this proposal is submitted for assistance in obtaining a copy of those regulations.

5. The prospective lower tier participant agrees, by submitting this proposal that, should the proposed covered transaction be entered into, it shall not knowingly enter into any lower tier covered transaction with a person who is debarred, suspended, declared ineligible, or voluntarily excluded from participation in this covered transaction, unless authorized by the department or agency with which this transaction originated.

6. The prospective lower tier participant further agrees by submitting this proposal that it will include the clause titled "Certification Regarding Debarment, Suspension, Ineligibility, and Voluntary Exclusion--Lower Tier Covered Transactions," without modification, in all lower tier covered transactions and in all solicitations for lower tier covered transactions.

7. A participant in a covered transaction may rely upon a certification of a prospective participant in a lower tier covered transaction that it is not debarred, suspended, ineligible, or voluntarily excluded from the covered transaction, unless it knows that the certification is erroneous. A participant may decide the method and frequency by which it determines the eligibility of its principals. Each participant may, but is not required to, check the Nonprocurement List.

8. Nothing contained in the foregoing shall be construed to require establishment of a system of records in order to render in good faith the certification required by this clause. The knowledge and information of a participant is not required to exceed that which is normally possessed by a prudent person in the ordinary course of business dealings.

9. Except for transactions authorized under paragraph 5 of these instructions, if a participant in a covered transaction knowingly enters into a lower tier covered transaction with a person who is suspended, debarred, ineligible, or voluntarily excluded from participation in this transaction, in addition to other remedies available to the Federal Government, the department or agency with which this transaction originated may pursue available remedies, including suspension and/or debarment.

Certification

(1) The prospective lower tier participant certifies, by submission of this proposal, that neither it nor its principals are presently debarred, suspended, proposed for debarment, declared ineligible, or voluntarily excluded from participation in this transaction by any Federal department or agency.

(2) Where the prospective lower tier participant is unable to certify to any of the statements in this certification, such prospective participant shall attach an explanation to this proposal.

NAME OF APPLICANT	PR/AWARD NUMBER AND/OR PROJECT NAME
PRINTED NAME AND TITLE OF AUTHORIZED REPRESENTATIVE	
SIGNATURE	DATE

ED 80-0014, 9/90 (Replaces GCS-009 (REV. 12/88), which is obsolete)

DISCLOSURE OF LOBBYING ACTIVITIES

Approved by OMB
0348-0046

Complete this form to disclose lobbying activities pursuant to 31 U.S.C. 1352
(See reverse for public burden disclosure.)

1. Type of Federal Action:
☐ a. contract
b. grant
c. cooperative agreement
d. loan
e. loan guarantee
f. loan insurance

2. Status of Federal Action:
☐ a. bid/offer/application
b. initial award
c. post-award

3. Report Type:
☐ a. initial filing
b. material change
For Material Change Only:
year _____ quarter _____
date of last report _____

4. Name and Address of Reporting Entity:
☐ Prime ☐ Subawardee
Tier _____, *if known*:

Congressional District, *if known*:

5. If Reporting Entity in No. 4 is Subawardee, Enter Name and Address of Prime:

Congressional District, *if known*:

6. Federal Department/Agency:

7. Federal Program Name/Description:

CFDA Number, *if applicable*: _____

8. Federal Action Number, *if known*:

9. Award Amount, *if known*:
$

10. a. Name and Address of Lobbying Entity
(if individual, last name, first name, MI):

b. Individuals Performing Services *(including address if different from No. 10a)*
(last name, first name, MI):

(attach Continuation Sheet(s) SF-LLL-A, if necessary)

11. Amount of Payment *(check all that apply)*:
$ _____ ☐ actual ☐ planned

12. Form of Payment *(check all that apply)*:
☐ a. cash
☐ b. in-kind; specify: nature _____
value _____

13. Type of Payment *(check all that apply)*:
☐ a. retainer
☐ b. one-time fee
☐ c. commission
☐ d. contingent fee
☐ e. deferred
☐ f. other; specify: _____

14. Brief Description of Services Performed or to be Performed and Date(s) of Service, including officer(s), employee(s), or Member(s) contacted, for Payment Indicated in Item 11:

(attach Continuation Sheet(s) SF-LLL-A, if necessary)

15. Continuation Sheet(s) SF-LLL-A attached: ☐ Yes ☐ No

16. Information requested through this form is authorized by title 31 U.S.C. section 1352. This disclosure of lobbying activities is a material representation of fact upon which reliance was placed by the tier above when this transaction was made or entered into. This disclosure is required pursuant to 31 U.S.C. 1352. This information will be reported to the Congress semi-annually and will be available for public inspection. Any person who fails to file the required disclosure shall be subject to a civil penalty of not less than $10,000 and not more than $100,000 for each such failure.

Signature: _____
Print Name: _____
Title: _____
Telephone No.: _____ Date: _____

Federal Use Only:

Authorized for Local Reproduction
Standard Form - LLL

INSTRUCTIONS FOR COMPLETION OF SF-LLL, DISCLOSURE OF LOBBYING ACTIVITIES

This disclosure form shall be completed by the reporting entity, whether subawardee or prime Federal recipient, at the initiation or receipt of a covered Federal action, or a material change to a previous filing, pursuant to title 31 U.S.C. section 1352. The filing of a form is required for each payment or agreement to make payment to any lobbying entity for influencing or attempting to influence an officer or employee of any agency, a Member of Congress, an officer or employee of Congress, or an employee of a Member of Congress in connection with a covered Federal action. Use the SF-LLL-A Continuation Sheet for additional information if the space on the form is inadequate. Complete all items that apply for both the initial filing and material change report. Refer to the implementing guidance published by the Office of Management and Budget for additional information.

1. Identify the type of covered Federal action for which lobbying activity is and/or has been secured to influence the outcome of a covered Federal action.

2. Identify the status of the covered Federal action.

3. Identify the appropriate classification of this report. If this is a followup report caused by a material change to the information previously reported, enter the year and quarter in which the change occurred. Enter the date of the last previously submitted report by this reporting entity for this covered Federal action.

4. Enter the full name, address, city, state and zip code of the reporting entity. Include Congressional District, if known. Check the appropriate classification of the reporting entity that designates if it is, or expects to be, a prime or subaward recipient. Identify the tier of the subawardee, e.g., the first subawardee of the prime is the 1st tier. Subawards include but are not limited to subcontracts, subgrants and contract awards under grants.

5. If the organization filing the report in item 4 checks "Subawardee", then enter the full name, address, city, state and zip code of the prime Federal recipient. Include Congressional District, if known.

6. Enter the name of the Federal agency making the award or loan commitment. Include at least one organizational level below agency name, if known. For example, Department of Transportation, United States Coast Guard.

7. Enter the Federal program name or description for the covered Federal action (item 1). If known, enter the full Catalog of Federal Domestic Assistance (CFDA) number for grants, cooperative agreements, loans, and loan commitments.

8. Enter the most appropriate Federal identifying number available for the Federal action identified in item 1 (e.g., Request for Proposal (RFP) number; Invitation for Bid (IFB) number; grant announcement number; the contract, grant, or loan award number; the application/proposal control number assigned by the Federal agency). Include prefixes, e.g., "RFP-DE-90-001."

9. For a covered Federal action where there has been an award or loan commitment by the Federal agency, enter the Federal amount of the award/loan commitment for the prime entity identified in item 4 or 5.

10. (a) Enter the full name, address, city, state and zip code of the lobbying entity engaged by the reporting entity identified in item 4 to influence the covered Federal action.

    (b) Enter the full names of the individual(s) performing services, and include full address if different from 10 (a). Enter Last Name, First Name, and Middle Initial (MI).

11. Enter the amount of compensation paid or reasonably expected to be paid by the reporting entity (item 4) to the lobbying entity (item 10). Indicate whether the payment has been made (actual) or will be made (planned). Check all boxes that apply. If this is a material change report, enter the cumulative amount of payment made or planned to be made.

12. Check the appropriate box(es). Check all boxes that apply. If payment is made through an in-kind contribution, specify the nature and value of the in-kind payment.

13. Check the appropriate box(es). Check all boxes that apply. If other, specify nature.

14. Provide a specific and detailed description of the services that the lobbyist has performed, or will be expected to perform, and the date(s) of any services rendered. Include all preparatory and related activity, not just time spent in actual contact with Federal officials. Identify the Federal official(s) or employee(s) contacted or the officer(s), employee(s), or Member(s) of Congress that were contacted.

15. Check whether or not a SF-LLL-A Continuation Sheet(s) is attached.

16. The certifying official shall sign and date the form, print his/her name, title, and telephone number.

Public reporting burden for this collection of information is estimated to average 30 minutes per response, including time for reviewing instructions, searching existing data sources, gathering and maintaining the data needed, and completing and reviewing the collection of information. Send comments regarding the burden estimate or any other aspect of this collection of information, including suggestions for reducing this burden, to the Office of Management and Budget, Paperwork Reduction Project (0348-0046), Washington, D.C. 20503.

DISCLOSURE OF LOBBYING ACTIVITIES
CONTINUATION SHEET

Approved by OM
0348-0046

Reporting Entity: _____ Page _____ of _____

[FR Doc. 92-19601 Filed 8-17-92; 8:45 am]

BILLING CODE 4000-01-C

Authorized for Local Reproduction
Standard Form - LLL-A

federal register

Tuesday
August 18, 1992

Part VII

Department of Education

Clearinghouses for Individuals With Disabilities; Notice Inviting Applications for Fiscal Year 1993

DEPARTMENT OF EDUCATION

[CFDA No.: 84.030]

Clearinghouses for Individuals With Disabilities; Notice Inviting Applications for Fiscal Year (FY) 1993

Note to Applicants: This notice is a complete application package. Together with the statute authorizing the programs and applicable regulations governing the programs, including the Education Department General Administrative Regulations (EDGAR), the notice contains all of the information, application forms, and instructions needed to apply for a grant under these competitions.

This program supports AMERICA 2000, the President's strategy for moving the Nation toward the National Education Goals, by improving services for infants, toddlers, children, and youth with disabilities and by so doing helping them to reach the high levels of achievement called for in the National Education Goals.

Purpose of Program: The Clearinghouses program provides financial assistance for—

(a) A national clearinghouse on the education of children and youth with disabilities that disseminates information and provides technical assistance to parents, professionals, and other interested parties;

(b) A national clearinghouse on postsecondary education for individuals with disabilities; and

(c) A national clearinghouse designed to encourage students to seek careers and professional personnel to seek employment in the various fields relating to the education of children and youth with disabilities.

(Authority: 20 U.S.C. 1433)

Eligible Applicants: Parties eligible to apply for assistance under this part are public agencies or nonprofit private organizations or institutions.

(Authority: 20 U.S.C. 1433)

CLEARINGHOUSES FOR INDIVIDUALS WITH DISABILITIES

[Application notice for fiscal year 1993]

Title and CFDA No.	Deadline for transmittal of applications	Deadline for intergovernmental review	Available funds	Estimated range of awards (per year)	Estimated average size of awards (per year)	Estimated number of awards	Project period in months
National Information Center (84.030A)	1/15/93	3/18/93	$1,026,000	$1,026,000	$1,026,000	1	Up to 60.
Postsecondary Clearinghouse (84.030C)	1/15/93	3/18/93	361,000	361,000	361,000	1	Up to 60.
Special Education Employment Clearinghouse (84.030E)	1/15/93	3/18/93	601,000	601,000	601,000	1	Up to 60.

Applicable Regulations: (a) The Education Department General Administrative Regulations (EDGAR) as follows in 34 CFR parts 74, 75, 77, 79, 80, 81, 82, 85, 86; and (b). The regulations for this program in 34 CFR part 320, as amended on October 22, 1991 at 56 FR 54686.

Priorities

Under 34 CFR 75.105(c)(3) and section 633 of the Individuals with Disabilities Education Act, the Secretary gives an absolute preference to applications that meet the following priorities. The Secretary funds under this program only applications that meet these absolute priorities:

Absolute Priority—National Information Center

This priority provides support to establish and operate a national clearinghouse for children and youth with disabilities that will do the following:

(1) Collect and disseminate information (including the development of materials) on characteristics of infants, toddlers, children, and youth with disabilities and on programs, legislation, and services relating to their education under this Act and other Federal laws.

(2) Participate in programs and services related to disability issues for providing outreach, technical assistance, collection, and dissemination of information; and promoting networking of individuals with appropriate national, State, and local agencies and organizations.

(3) Establish a coordinated network and conduct outreach activities with relevant Federal, State, and local organizations and other sources for promoting public awareness of disability issues and the availability of information, programs, and services.

(4) Collect, disseminate, and develop information on current and future national, Federal, regional, and State needs for providing information to parents, professionals, individuals with disabilities, and other interested parties relating to the education and related services of individuals with disabilities.

(5) Provide technical assistance to national, Federal, regional, State and local agencies and organizations seeking to establish information and referral services for individuals with disabilities and their families.

(6) Include strategies to disseminate information to underrepresented groups such as those with limited English proficiency, in carrying out the activities in this section.

Absolute Priority 2—Postsecondary Clearinghouse

This priority provides support to establish and operate a national clearinghouse on postsecondary education for individuals with disabilities that will do the following:

(1) Collect and disseminate information nationally on characteristics of individuals entering and participating in education and training programs after high school; legislation affecting such individuals and such programs; policies, procedures, and support services, as well as adaptations, and other resources available or recommended to facilitate the education of individuals with disabilities; available programs and services that include, or can be adapted to include, individuals with disabilities; and sources of financial aid for the education and training of individuals with disabilities.

(2) Identify areas of need for additional information.

(3) Develop new materials (in both print and nonprint form), especially by synthesizing information from a variety of fields affecting disability issues and the education, rehabilitation, and retraining of individuals with disabilities.

(4) Develop a coordinated network of professionals, related organizations and associations, mass media, other clearinghouses, and governmental agencies at the Federal, regional, State, and local level for the purposes of disseminating information and promoting awareness of issues relevant to the education of individuals with

disabilities after high school and referring individuals who request information to local resources.

(5) Respond to requests from individuals with disabilities, their parents, and professionals who work with them, for information that will enable them to make appropriate decisions about postsecondary education and training.

Absolute Priority 3—Special Education Employment Clearinghouse

This priority provides support to establish and operate a national clearinghouse designed to encourage students to seek careers and professional personnel to seek employment in the various fields related to the education of children and youth with disabilities that will do the following:

(1) Collect and disseminate information on current and future national, regional, and State needs for special education and related services personnel.

(2) Disseminate information to high school counselors and others concerning current career opportunities in special education, location of programs, and various forms of financial assistance (such as scholarships, stipends, and allowances).

(3) Identify training programs available around the country.

(4) Establish a network among local and State educational agencies and institutions of higher education concerning the supply of graduates and available openings.

(5) Provide technical assistance to institutions seeking to meet State and professionally recognized standards.

(Authority: 20 U.S.C. 1433)

Selection Criteria

The Secretary uses the criteria in this section to evaluate applications for new grants.

(a) *Plan of operation.* (40 points)

(1) The Secretary reviews each application for information that shows the quality of the plan of operation for the project.

(2) The Secretary looks for information that shows—

(i) High quality in the design of the project;

(ii) An effective plan of management that ensures proper and efficient administration of the project;

(iii) A clear description of how the objectives of the project relate to the purpose of the program;

(iv) The way the applicant plans to use its resources and personnel to achieve each objective; and

(v) A clear description of how the applicant will provide equal access and treatment for eligible project participant who are members of groups that have been traditionally underrepresented such as—

(A) Members of racial or ethnic minority groups;

(B) Women;

(C) Individuals with disabilities; and

(D) The elderly.

(b) *Quality of key personnel.* (15 points)

(1) The Secretary reviews each application for information that shows the qualifications of key personnel the applicant plans to use on the project.

(2) The Secretary looks for information that shows—

(i) The qualifications of the project director;

(ii) The qualifications of each of the other key personnel to be used in the project;

(iii) The time that each person referred to in paragraph (b)(2) (i) and (ii) of this section will commit to the project; and

(iv) The extent to which the applicant, as part of its nondiscriminatory employment practices, encourages applications for employment from persons who are members of groups that have been traditionally underrepresented, such as—

(A) Members of racial or ethnic minority groups;

(B) Women;

(C) Individuals with disabilities; and

(D) The elderly.

(3) To determine personnel qualifications, the Secretary considers experience and training, in fields related to the objectives of the project, as well as other information that the applicant provides.

(c) *Budget and cost effectiveness.* (10 points)

(1) The Secretary reviews each application for information that shows that the project has an adequate budget and is cost effective.

(2) The Secretary looks for information that shows—

(i) The budget for the project is adequate to support the project activities; and

(ii) Costs are reasonable in relation to the objectives of the project.

(d) *Evaluation plan.* (10 points)

(1) The Secretary reviews each application for information that shows the quality of the evaluation plan for the project. (See 34 CFR 75.590, Evaluation by the grantee.)

(2) The Secretary looks for information that shows methods of evaluation that are appropriate for the project, and to the extent possible, are objective and produce data that are quantifiable.

(e) *Adequacy of resources.* (5 points)

(1) The Secretary reviews each application for information that shows that the applicant plans to devote adequate resources to the project.

(2) The Secretary looks for information that shows—

(i) The facilities that the applicant plans to use are adequate; and

(ii) The equipment and supplies that the applicant plans to use are adequate.

(f) *Experience and ability.* (10 points) The Secretary looks for information that shows the applicant's—

(1) National experience relevant to performance of the functions supported by this program;

(2) Ability to conduct the proposed project;

(3) Ability to communicate with intended consumers of information; and

(4) Ability to maintain necessary communication and coordination with other relevant projects, agencies, and organizations.

(g) *Cooperation and coordination with other organizations.* (10 points)

(1) The Secretary reviews each application for information that shows the activities funded under this section will be coordinated with—

(i) Similar activities funded from grants and contracts awarded under this part and under part C of the Act; and

(ii) Other agencies and organizations conducting or eligible to conduct activities essential to the effective implementation of the proposed project.

(2) The Secretary looks for information that shows the nature and extent of, and timeline for, coordination which the applicant has had and proposes to have to facilitate implementation and continuation of the project activities after the termination of Federal funding.

Intergovernmental Review

These programs are subject to the requirements of Executive Order 12372 (Intergovernmental Review of Federal Programs) and the regulations in 34 CFR part 79.

The objective of the Executive order is to foster an intergovernmental partnership and to strengthen federalism by relying on State and local processes for State and local government coordination and review of proposed Federal financial assistance.

Applicants must contact the appropriate State Single Point of Contact to find out about, and to comply with, the State's process under Executive Order 12372. Applicants proposing to perform activities in more

than one State should immediately contact the Single Point of Contact for each of those States and follow the procedure established in each State under the Executive order. If you want to know the name and address of any State Single Point of Contact, see the list published in the **Federal Register** on September 17, 1990 (55 FR 38210 and 38211).

In States that have not established a process or chosen a program for review, State, areawide, regional, and local entities may submit comments directly to the Department.

Any State Process Recommendation and other comments submitted by a State Single Point of Contact and any comments from State, areawide, regional, and local entities must be mailed or hand-delivered by the dates indicated in this notice to the following address: The Secretary, E.O. 12372—CFDA #84.030____, U.S. Department of Education, Room 4161, 400 Maryland Avenue, SW., Washington, DC 20202–0125.

Proof of mailing will be determined on the same basis as applications (see 34 CFR 75.102). Recommendations or comments may be hand-delivered until 4:30 p.m. (Washington, DC time) on the date indicated in this notice.

Please note that the above address is not the same address as the one to which the applicant submits its completed application. Do not send applications to the above address.

Instructions for transmittal of applications:

(a) If an applicant wants to apply for a grant, the applicant shall—

(1) Mail the original and two copies of the application on or before the deadline date to: U.S. Department of Education, Application Control Center, Attention: (CFDA #84.030____), Washington, DC 20202–4725 or

(2) Hand deliver the original and two copies of the application by 4:30 p.m. (Washington, DC time) on the deadline date to: U.S. Department of Education, Application Control Center, Attention: (CFDA #84.030____), Room #3633, Regional Office Building #3, 7th and D Streets, SW., Washington, DC

(b) An applicant must show one of the following as proof of mailing:

(1) A legibly dated U.S. Postal Service postmark.

(2) A legible mail receipt with the date of mailing stamped by the U.S. Postal Service.

(3) A dated shipping label, invoice, or receipt from a commercial carrier.

(4) Any other proof of mailing acceptable to the Secretary.

(c) If an application is mailed through the U.S. Postal Service, the Secretary does not accept either of the following as proof of mailing:

(1) A private metered postmark.

(2) A mail receipt that is not dated by the U.S. Postal Service.

Notes: (1) The U.S. Postal Service does not uniformly provide a dated postmark. Before relying on this method, an applicant should check with its local post office.

(2) The Application Control Center will mail a Grant Application Receipt Acknowledgement to each applicant. If an applicant fails to receive the notification of application receipt within 15 days from the date of mailing the application, the applicant should call the U.S. Department of Education Application Control Center at (202) 708–9494.

(3) The applicant must indicate on the envelope and—if not provided by the Department—in item 10 of the Application for Federal Assistance (Standard Form 424) the CFDA number—and suffix letter, if any—of the competition under which the application is being submitted.

Application Instructions and Forms

The appendix to this application is divided into three parts plus a section on common questions and answers, a statement regarding estimated public reporting burden, and various assurances and certifications. These parts and additional materials are organized in the same manner that the submitted applications should be organized. The parts and additional materials are as follows:

Part I: Application for Federal Assistance (Standard Form 424 (Rev. 4–88)) and instructions.

Part II: Budget Information—Non-Construction Programs (Standard Form 424A) and instructions.

Part III: Application Narrative.

ADDITIONAL MATERIALS:

Estimated Public Reporting Burden.

Assurances—Non-Construction Programs (Standard Form 424B).

Certifications regarding Lobbying; Debarment, Suspension, and Other Responsibility Matters; and Drug-Free Workplace Requirements (ED 80–0013).

Certification regarding Debarment, Suspension, Ineligibility and Voluntary Exclusion: Lower Tier Covered Transactions (ED 80–0014, 9/90) and instructions. (NOTE: ED 80–0014 is intended for the use of grantees and should not be transmitted to the Department.)

Disclosure of Lobbying Activities (Standard Form LLL) (if applicable) and instructions; and Disclosure of Lobbying Activities Continuation Sheet (Standard Form LLL–A).

An applicant may submit information on a photostatic copy of the application and budget forms, the assurances, and the certifications. However, the application form, the assurances, and the certifications must each have an original signature. No grant may be awarded unless a completed application form has been received.

FOR FURTHER INFORMATION CONTACT: Max Mueller, U.S. Department of Education, 400 Maryland Avenue, SW., Washington, DC 20202–2651. Telephone: (202) 205–9554. Deaf and hard of hearing individuals may call (202) 205–9999 for TDD services.

(Authority: 20 U.S.C. 1433)

Robert R. Davila,

Assistant Secretary, Office of Special Education and Rehabilitative Services.

Appendix

Application Forms and Instructions

Applicants are advised to reproduce and complete the application forms in this section. Applicants are required to submit an original and two copies of each application as provided in this section.

Common Questions and Answers

While we have always made every effort to make our application materials as clear and complete as possible, a major task of Division of Personnel Preparation staff from the date of the program announcement to the closing date is answering phone and mail requests with further questions. The next several pages list some of the most common issues raised by potential applicants in interpreting our regulations and application instructions.

The following issues are not hypothetical. They represent concerns repeatedly raised, even though in many cases they are answered in the regulations or application instructions. The problem seems to be that the issues are not sufficiently highlighted, or that they are disguised by the formal language of legislative documents. These issues and general responses are listed in approximately the frequency of occurrence.

• Extension of Deadlines

Waivers for individual applications are not granted, regardless of the circumstances. Under very extraordinary circumstances a closing date may be changed. Such changes are announced in the **Federal Register** and apply to *all* applications.

• Copies of the Application

Current Government-wide policy is that only an original and two copies need to be submitted. Division staff duplicate the two additional copies necessary to complete the review process by staff and peer readers. It is

not required that applications be bound, though they may be if you wish. However, to facilitate our reproduction, please leave one copy unbound. Also, please do not use colored paper, foldouts, photographs, or other hard to duplicate materials. Some applicants prefer to make their own additional copies. If you do so, there is no need to submit more than two additional copies, as that is all that will be required for the review process.

• Help Preparing Applications

We are happy to provide general program information. Clearly it would not be appropriate for staff to participate in the actual writing of an application, but we can respond to specific questions about our application requirements and evaluation criteria, or about the announced priority. Applicants should understand that such previous contact is not required, nor does it guarantee the success of an application.

• Notification of Funding

The time required to complete the evaluation of applications is extremely variable. Once applications have been received staff must determine the areas of expertise needed to appropriately evaluate the applications, identify and contact potential reviewers, convene peer review panels, and summarize and review the recommendations of the review panels. You can expect to receive notification within 4 to 6 months of the application closing date. The requested start date should therefore be a minimum of 6 months after the closing date.

• Possibility of Learning the Outcome of Review Panels Prior to Official Notification

Every year we are called by a number of applicants who have really legitimate reasons for needing to know the outcome of the review prior to official notification. Some applicants need to make job decisions, etc. Regardless of the reason, we cannot share information about the review with anyone prior to officially completing the review process for a competition, nor can we tell you when you will be notified. Please do not call us and ask us for this information. You will be notified as quickly as possible either by a grant negotiator (if your application is recommended for funding) or through a letter to the certifying representative (if your application is not successful).

• Length of Application

The Department of Education is making a concerted effort to reduce the volume of paper work in applications to discretionary programs. The following suggestions should assist applicants to prepare applications which will convey the information necessary for the review and selection process, and also save America's forests, professional time and energy. The scope and complexity of projects are too variable to establish firm limits on length. Your application should provide enough information to allow the review panel to evaluate the importance and impact of the project as well as to make knowledgeable judgments about the methods you propose to use (design, subjects, sampling procedures, measures, instruments, data analysis strategies, etc.). Many applications include voluminous appended material. In most cases this material is not useful in the evaluation process. Very few projects require much supporting material. However, it is often helpful to have:

(1) *Staff Vitae*—when these include each person's title and role in the proposed project and contain only information that is relevant to this proposed project's activities or publications. Vitae for consultants and Advisory Council members should be similarly brief.

(2) *Instruments*—except in the case of generally available and well known instruments.

(3) *Agreements*—when the participation of an agency other than the applicant is critical to the project. This is particularly critical when an intervention will be implemented within an agency, or when subjects will be drawn from particular agencies. Letters of cooperation should be specific, indicating agreement to implement a particular intervention or to provide access to a particular group. General letters of support are not useful. Except for the three items noted above, most appendix material is rarely useful. Typical extraneous materials include:

(1) Related project descriptions completed by applicant
(2) Maps
(3) State plans
(4) Brochures
(5) Copies of publications.

• Use of Person Loading Charts

Program officials and applicants often find person loading charts useful formats for showing project personnel and their time commitments to individual activities. A person loading chart is a tabular representation of major activities by number of days spent by each person involved in each activity, as shown in the following example.

TABLE #.—PERSON LOADING CHART

Activity	Time in day(s) by person [1]			
	Person A	Person B	Person C	Person D
Program development	15	20		
Mentoring				5
Research	5	25		
Information services		2		
Dissemination (manuscripts, etc.)		1	20	10

[1] Note: All figures represent FTE for the academic year.

• Return of Non-Funded Applications

Because of budget restrictions, we are no longer able to return original copies of applications. Thus, applicants should retain at least one copy of the application. Copies of reviewer comments will be mailed to all applicants.

• Delivering/Sending Applications to the Competition Manager

Applications can be mailed or hand delivered, but in either case must go to the Application Control Center at the address listed in the Mailing Instructions in this packet. Delivering or sending the application to the competition manager in the program office may prevent it from being logged in on time to the appropriate competition.

• Format for Applications

Applications are more likely to receive favorable reviews by panels when they are organized according to

the published evaluation criteria. If you prefer to use a different format you may wish to cross- reference the sections of your application to the evaluation criteria to be sure that reviewers are able to find all relevant information.

• Allowed Travel Under These Projects

Travel associated with carrying out the project is allowed (i.e. travel for data collection, etc.). Travel to conferences is the travel item that is most likely to be questioned during negotiations. Such travel is sometimes allowed when it is for purposes of dissemination, when there will be results to be disseminated, and when it is clear that a conference presentation or workshop is an effective way of reaching a particular target group.

• Funding of Approved Applications

It is often the case that the number of applications recommended for approval by the reviewers exceeds the dollars available for funding projects under a particular competition. When the panel reviews are completed for a particular competition, the individual reviewer scores and applications are ranked. The higher ranked, approved applications are funded first, and there are often lower ranked, approved applications that do not receive funding. Sometimes the one or two applications that are approved and fall next in rank order (after the projects selected for funding) are placed on hold. If dollars are freed up during negotiations or if a higher ranked applicant declines the award, the projects on hold may receive funding. If you receive a letter stating that you will not receive funding then your project has neither been selected for funding nor placed on hold.

• Issues Raised During Negotiations

During negotiations technical and budget issues may be raised. These are issues that have been identified during panel and staff review. Generally, technical issues are minor issues that require clarification. Alternative approaches may be presented for your consideration, or you may be asked to provide additional information or rationale for something you have proposed to do. Sometimes issues are stated as "conditions". These are issues that have been identified as so critical that the award cannot be made unless those conditions are met. Questions are also raised about the proposed budget during the negotiation phase. Generally, budget issues are raised because there is inadequate justification or explanation of the particular budget item, or because the budget item does not seem important to the successful completion of the project. The grants negotiator will present the negotiation questions or issues to you and ask you to respond. If you do not understand the question, you should ask for clarification. In responding to negotiation items you should provide any additional information or clarification requested. You may feel that an issue was addressed in the application. It may not, however, have been explained in enough detail to make it understood by reviewers, and more information should be provided. If you are asked to make changes that you feel could seriously affect the project's success you may provide reasons for not making the changes or provide alternative suggestions. Similarly, if proposed budget reductions will, in your opinion, seriously affect the activities you may want to explain why and provide additional justification for the proposed expenses. Your changes, explanations, and alternative suggestions will be carefully evaluated by staff. In some instances additional negotiations or follow-up information may be needed. In such instances you will again be contacted by the grants negotiator. An award cannot be made until all negotiation issues have been resolved.

• Successful Applications and Estimated/Projected Budget Amounts in Subsequent Years

In this era of budget deficits and need for cost containment, a conservative policy toward current and out-year budget expenditures is necessary. Projects will not be funded in excess of the amount listed in the **Federal Register** announcement. Any project approved by the reviewers that exceeds the estimated size of award will be required to be performed within the announced amount. The budget estimates that you provide in your application for out-year costs are critical for planning purposes, but they in no way represent a commitment by the Department to a particular level of funding in subsequent years. Budget modifications during the negotiation process, the findings from the initial year, or needed changes in the research design can affect your budget requirements in subsequent years. However, keep in mind that multi-year projects are likely to be level funded unless there are increases in costs attributable to significant changes in activity level. Grantees having multi-year projects will be asked to submit a continuation application and a detailed budget request prior to each year of the project.

• Difference Between a Cooperative Agreement and a Grant

A cooperative agreement is similar to a grant in that its principal purpose is to accomplish a public purpose of support or stimulation as authorized by a Federal statute. It differs from a grant in the sense that in a cooperative agreement substantial involvement is anticipated between the executive agency (in this case the Department of Education) and the recipient during the performance of the contemplated activity.

• Obtaining Copies of the **Federal Register**, Program Regulations and Federal Statutes

Copies of these materials can usually be found at your local library. If not, they can be obtained from the Government Printing Office by writing to: Superintendent of Documents, U.S. Government Printing Office, Washington, DC 20402. Telephone: (202) 783–3238.

Application Narrative and Instructions

Applications are more likely to receive favorable reviews by panels when they are organized according to the published evaluation criteria found elsewhere in this packet. If you prefer to use a different format you may wish to cross-reference the sections of your application to the evaluation criteria to ensure that reviewers are able to find all relevant information.

The following is a suggested format you may wish to use in preparing your application. This suggested format is advisory only, since the scope and complexity of projects is too variable to establish firm limits on length and format. In your application you may wish to include the following features in the order listed below:

(a) An abstract of the project;
(b) The extent the project meets the purposes of the authorizing statute;
(c) The extent the project meets specific needs recognized in the statute that authorizes the program;
(d) The plan of operation which the applicant proposes to use to administer the project;
(e) The quality of key personnel to be used to achieve each objective;
(f) Budget and cost effectiveness to achieve the proposed activity;
(g) The evaluation plan to evaluate the project; and
(h) The adequacy of resources available and needed to achieve each objective.

BILLING CODE 4000–01–M

OMB Approval No. 0348-0043

APPLICATION FOR FEDERAL ASSISTANCE

1. TYPE OF SUBMISSION: Application ☐ Construction ☐ Non-Construction; Preapplication ☐ Construction ☐ Non-Construction	2. DATE SUBMITTED	Applicant Identifier
	3. DATE RECEIVED BY STATE	State Application Identifier
	4. DATE RECEIVED BY FEDERAL AGENCY	Federal Identifier

5. APPLICANT INFORMATION

Legal Name:	Organizational Unit:
Address (give city, county, state, and zip code):	Name and telephone number of the person to be contacted on matters involving this application (give area code)

6. EMPLOYER IDENTIFICATION NUMBER (EIN): ☐☐ – ☐☐☐☐☐☐☐

7. TYPE OF APPLICANT: (enter appropriate letter in box) ☐

A. State
B. County
C. Municipal
D. Township
E. Interstate
F. Intermunicipal
G. Special District
H. Independent School Dist.
I. State Controlled Institution of Higher Learning
J. Private University
K. Indian Tribe
L. Individual
M. Profit Organization
N. Other (Specify) _____

8. TYPE OF APPLICATION:

☐ New ☐ Continuation ☐ Revision

If Revision, enter appropriate letter(s) in box(es): ☐ ☐

A. Increase Award B. Decrease Award C. Increase Duration
D. Decrease Duration Other (specify):

_____

9. NAME OF FEDERAL AGENCY:

10. CATALOG OF FEDERAL DOMESTIC ASSISTANCE NUMBER: ☐☐☐.☐☐☐

TITLE:

11. DESCRIPTIVE TITLE OF APPLICANT'S PROJECT:

12. AREAS AFFECTED BY PROJECT (cities, counties, states, etc.)

13. PROPOSED PROJECT:		14. CONGRESSIONAL DISTRICTS OF:	
Start Date	Ending Date	a. Applicant	b. Project

15. ESTIMATED FUNDING:		
a. Federal	$	.00
b. Applicant	$	.00
c. State	$	.00
d. Local	$	.00
e. Other	$	.00
f. Program Income	$	.00
g. TOTAL	$	.00

16. IS APPLICATION SUBJECT TO REVIEW BY STATE EXECUTIVE ORDER 12372 PROCESS?

a. YES THIS PREAPPLICATION/APPLICATION WAS MADE AVAILABLE TO THE STATE EXECUTIVE ORDER 12372 PROCESS FOR REVIEW ON

DATE_____

b. NO ☐ PROGRAM IS NOT COVERED BY E.O. 12372

☐ OR PROGRAM HAS NOT BEEN SELECTED BY STATE FOR REVIEW

17. IS THE APPLICANT DELINQUENT ON ANY FEDERAL DEBT?

☐ Yes If "Yes," attach an explanation. ☐ No

18. TO THE BEST OF MY KNOWLEDGE AND BELIEF, ALL DATA IN THIS APPLICATION/PREAPPLICATION ARE TRUE AND CORRECT, THE DOCUMENT HAS BEEN DULY AUTHORIZED BY THE GOVERNING BODY OF THE APPLICANT AND THE APPLICANT WILL COMPLY WITH THE ATTACHED ASSURANCES IF THE ASSISTANCE IS AWARDED

a. Typed Name of Authorized Representative	b. Title	c. Telephone number
d. Signature of Authorized Representative		e. Date Signed

Previous Editions Not Usable

Standard Form 424 (REV 4-88)
Prescribed by OMB Circular A-102

Authorized for Local Reproduction

INSTRUCTIONS FOR THE SF 424

This is a standard form used by applicants as a required facesheet for preapplications and applications submitted for Federal assistance. It will be used by Federal agencies to obtain applicant certification that States which have established a review and comment procedure in response to Executive Order 12372 and have selected the program to be included in their process, have been given an opportunity to review the applicant's submission.

Item: Entry:

1. Self-explanatory.
2. Date application submitted to Federal agency (or State if applicable) & applicant's control number (if applicable).
3. State use only (if applicable).
4. If this application is to continue or revise an existing award, enter present Federal identifier number. If for a new project, leave blank.
5. Legal name of applicant, name of primary organizational unit which will undertake the assistance activity, complete address of the applicant, and name and telephone number of the person to contact on matters related to this application.
6. Enter Employer Identification Number (EIN) as assigned by the Internal Revenue Service.
7. Enter the appropriate letter in the space provided.
8. Check appropriate box and enter appropriate letter(s) in the space(s) provided:
   - "New" means a new assistance award.
   - "Continuation" means an extension for an additional funding/budget period for a project with a projected completion date.
   - "Revision" means any change in the Federal Government's financial obligation or contingent liability from an existing obligation.
9. Name of Federal agency from which assistance is being requested with this application.
10. Use the Catalog of Federal Domestic Assistance number and title of the program under which assistance is requested.
11. Enter a brief descriptive title of the project. if more than one program is involved, you should append an explanation on a separate sheet. If appropriate (e.g., construction or real property projects), attach a map showing project location. For preapplications, use a separate sheet to provide a summary description of this project.

Item: Entry:

12. List only the largest political entities affected (e.g., State, counties, cities).
13. Self-explanatory.
14. List the applicant's Congressional District and any District(s) affected by the program or project.
15. Amount requested or to be contributed during the first funding/budget period by each contributor. Value of in-kind contributions should be included on appropriate lines as applicable. If the action will result in a dollar change to an existing award, indicate *only* the amount of the change. For decreases, enclose the amounts in parentheses. If both basic and supplemental amounts are included, show breakdown on an attached sheet. For multiple program funding, use totals and show breakdown using same categories as item 15.
16. Applicants should contact the State Single Point of Contact (SPOC) for Federal Executive Order 12372 to determine whether the application is subject to the State intergovernmental review process.
17. This question applies to the applicant organization, not the person who signs as the authorized representative. Categories of debt include delinquent audit disallowances, loans and taxes.
18. To be signed by the authorized representative of the applicant. A copy of the governing body's authorization for you to sign this application as official representative must be on file in the applicant's office. (Certain Federal agencies may require that this authorization be submitted as part of the application.)

OMB Approval No. 0348-0044

BUDGET INFORMATION — Non-Construction Programs

SECTION A – BUDGET SUMMARY

Grant Program Function or Activity (a)	Catalog of Federal Domestic Assistance Number (b)	Estimated Unobligated Funds		New or Revised Budget		
		Federal (c)	Non-Federal (d)	Federal (e)	Non-Federal (f)	Total (g)
1.		$	$	$	$	$
2.						
3.						
4.						
5. TOTALS		$	$	$	$	$

SECTION B – BUDGET CATEGORIES

6 Object Class Categories	GRANT PROGRAM, FUNCTION OR ACTIVITY				Total (5)
	(1)	(2)	(3)	(4)	
a. Personnel	$	$	$	$	$
b. Fringe Benefits					
c. Travel					
d. Equipment					
e. Supplies					
f. Contractual					
g. Construction					
h. Other					
i. Total Direct Charges (sum of 6a - 6h)					
j. Indirect Charges					
k. TOTALS (sum of 6i and 6j)	$	$	$	$	$
7. Program Income	$	$	$	$	$

Authorized for Local Reproduction

Standard Form 424A (4-88)
Prescribed by OMB Circular A-102

SECTION C - NON-FEDERAL RESOURCES

(a) Grant Program	(b) Applicant	(c) State	(d) Other Sources	(e) TOTALS
8.	$	$	$	$
9.				
10.				
11.				
12. TOTALS (sum of lines 8 and 11)	$	$	$	$

SECTION D - FORECASTED CASH NEEDS

	Total for 1st Year	1st Quarter	2nd Quarter	3rd Quarter	4th Quarter
13. Federal	$	$	$	$	$
14. NonFederal					
15. TOTAL (sum of lines 13 and 14)	$	$	$	$	$

SECTION E - BUDGET ESTIMATES OF FEDERAL FUNDS NEEDED FOR BALANCE OF THE PROJECT

(a) Grant Program	FUTURE FUNDING PERIODS (Years)			
	(b) First	(c) Second	(d) Third	(e) Fourth
16.	$	$	$	$
17.				
18.				
19.				
20. TOTALS (sum of lines 16 -19)	$	$	$	$

SECTION F - OTHER BUDGET INFORMATION

(Attach additional Sheets if Necessary)

21. Direct Charges:	22. Indirect Charges:

23. Remarks

SF 424A (4-88) Page 2
Prescribed by OMB Circular A-102

Authorized for Local Reproduction

INSTRUCTIONS FOR THE SF-424A

General Instructions

This form is designed so that application can be made for funds from one or more grant programs. In preparing the budget, adhere to any existing Federal grantor agency guidelines which prescribe how and whether budgeted amounts should be separately shown for different functions or activities within the program. For some programs, grantor agencies may require budgets to be separately shown by function or activity. For other programs, grantor agencies may require a breakdown by function or activity. Sections A,B,C, and D should include budget estimates for the whole project except when applying for assistance which requires Federal authorization in annual or other funding period increments. In the latter case, Sections A,B, C, and D should provide the budget for the first budget period (usually a year) and Section E should present the need for Federal assistance in the subsequent budget periods. All applications should contain a breakdown by the object class categories shown in Lines a-k of Section B.

Section A. Budget Summary
Lines 1-4, Columns (a) and (b)

For applications pertaining to a *single* Federal grant program (Federal Domestic Assistance Catalog number) and *not requiring* a functional or activity breakdown, enter on Line 1 under Column (a) the catalog program title and the catalog number in Column (b).

For applications pertaining to a *single* program *requiring* budget amounts by multiple functions or activities, enter the name of each activity or function on each line in Column (a), and enter the catalog number in Column (b). For applications pertaining to multiple programs where none of the programs require a breakdown by function or activity, enter the catalog program title on each line in *Column* (a) and the respective catalog number on each line in Column (b).

For applications pertaining to *multiple* programs where one or more programs *require* a breakdown by function or activity, prepare a separate sheet for each program requiring the breakdown. Additional sheets should be used when one form does not provide adequate space for all breakdown of data required. However, when more than one sheet is used, the first page should provide the summary totals by programs.

Lines 1-4, Columns (c) through (g.)

For new applications, leave Columns (c) and (d) blank. For each line entry in Columns (a) and (b), enter in Columns (e), (f), and (g) the appropriate amounts of funds needed to support the project for the first funding period (usually a year).

Lines 1-4, Columns (c) through (g.) (continued)

For continuing grant program applications, submit these forms before the end of each funding period as required by the grantor agency. Enter in Columns (c) and (d) the estimated amounts of funds which will remain unobligated at the end of the grant funding period only if the Federal grantor agency instructions provide for this. Otherwise, leave these columns blank. Enter in columns (e) and (f) the amounts of funds needed for the upcoming period. The amount(s) in Column (g) should be the sum of amounts in Columns (e) and (f).

For supplemental grants and changes to existing grants, do not use Columns (c) and (d). Enter in Column (e) the amount of the increase or decrease of Federal funds and enter in Column (f) the amount of the increase or decrease of non-Federal funds. In Column (g) enter the new total budgeted amount (Federal and non-Federal) which includes the total previous authorized budgeted amounts plus or minus, as appropriate, the amounts shown in Columns (e) and (f). The amount(s) in Column (g) should not equal the sum of amounts in Columns (e) and (f).

Line 5 — Show the totals for all columns used.

Section B Budget Categories

In the column headings (1) through (4), enter the titles of the same programs, functions, and activities shown on Lines 1-4, Column (a), Section A. When additional sheets are prepared for Section A, provide similar column headings on each sheet. For each program, function or activity, fill in the total requirements for funds (both Federal and non-Federal) by object class categories.

Lines 6a-i — Show the totals of Lines 6a to 6h in each column.

Line 6j – Show the amount of indirect cost.

Line 6k – Enter the total of amounts on Lines 6i and 6j. For all applications for new grants and continuation grants the total amount in column (5), Line 6k, should be the same as the total amount shown in Section A, Column (g), Line 5. For supplemental grants and changes to grants, the total amount of the increase or decrease as shown in Columns (1)-(4), Line 6k should be the same as the sum of the amounts in Section A, Columns (e) and (f) on Line 5.

INSTRUCTIONS FOR THE SF-424A *(continued)*

Line 7 – Enter the estimated amount of income, if any, expected to be generated from this project. Do not add or subtract this amount from the total project amount. Show under the program narrative statement the nature and source of income. The estimated amount of program income may be considered by the federal grantor agency in determining the total amount of the grant.

Section C. Non-Federal-Resources

Lines 8-11 – Enter amounts of non-Federal resources that will be used on the grant. If in-kind contributions are included, provide a brief explanation on a separate sheet.

Column (a) – Enter the program titles identical to Column (a), Section A. A breakdown by function or activity is not necessary.

Column (b) – Enter the contribution to be made by the applicant.

Column (c) – Enter the amount of the State's cash and in-kind contribution if the applicant is not a State or State agency. Applicants which are a State or State agencies should leave this column blank.

Column (d) – Enter the amount of cash and in-kind contributions to be made from all other sources.

Column (e) – Enter totals of Columns (b), (c), and (d).

Line 12 — Enter the total for each of Columns (b)-(e). The amount in Column (e) should be equal to the amount on Line 5, Column (f), Section A.

Section D. Forecasted Cash Needs

Line 13 – Enter the amount of cash needed by quarter from the grantor agency during the first year.

Line 14 – Enter the amount of cash from all other sources needed by quarter during the first year.

Line 15 – Enter the totals of amounts on Lines 13 and 14.

Section E. Budget Estimates of Federal Funds Needed for Balance of the Project

Lines 16 - 19 – Enter in Column (a) the same grant program titles shown in Column (a), Section A. A breakdown by function or activity is not necessary. For new applications and continuation grant applications, enter in the proper columns amounts of Federal funds which will be needed to complete the program or project over the succeeding funding periods (usually in years). This section need not be completed for revisions (amendments, changes, or supplements) to funds for the current year of existing grants.

If more than four lines are needed to list the program titles, submit additional schedules as necessary.

Line 20 – Enter the total for each of the Columns (b)-(e). When additional schedules are prepared for this Section, annotate accordingly and show the overall totals on this line.

Section F. Other Budget Information

Line 21 – Use this space to explain amounts for individual direct object-class cost categories that may appear to be out of the ordinary or to explain the details as required by the Federal grantor agency.

Line 22 – Enter the type of indirect rate (provisional, predetermined, final or fixed) that will be in effect during the funding period, the estimated amount of the base to which the rate is applied, and the total indirect expense.

Line 23 – Provide any other explanations or comments deemed necessary.

BILLING CODE 4000-01-C

Instructions for Estimated Public Reporting Burden

Under terms of the Paperwork Reduction Act of 1980, as amended, and the regulations implementing that Act, the Department of Education invited comment on the public reporting burden in this collection of information. Public reporting burden for this collection of information is estimated to average 36 hours per response, including the time for reviewing instructions, searching existing data sources, gathering and maintaining the data needed, and completing and reviewing the collection of information. You may send comments regarding this burden estimate or any other aspect of this collection of the information, including suggestions for reducing this burden, to the U.S. Department of Education, Information Management and Compliance Division, Washington, DC 20202–4651; and to the Office of Management and Budget, Paperwork Reduction Project 1820–0028, Washington, DC 20503.

(Information collection approved under OMB Control number 1820–0028. Expiration date: 1/95).

BILLING CODE 4000-01-M

OMB Approval No. 0348-0040

ASSURANCES — NON-CONSTRUCTION PROGRAMS

Note: Certain of these assurances may not be applicable to your project or program. If you have questions, please contact the awarding agency. Further, certain Federal awarding agencies may require applicants to certify to additional assurances. If such is the case, you will be notified.

As the duly authorized representative of the applicant I certify that the applicant:

1. Has the legal authority to apply for Federal assistance, and the institutional, managerial and financial capability (including funds sufficient to pay the non-Federal share of project costs) to ensure proper planning, management and completion of the project described in this application.

2. Will give the awarding agency, the Comptroller General of the United States, and if appropriate, the State, through any authorized representative, access to and the right to examine all records, books, papers, or documents related to the award; and will establish a proper accounting system in accordance with generally accepted accounting standards or agency directives.

3. Will establish safeguards to prohibit employees from using their positions for a purpose that constitutes or presents the appearance of personal or organizational conflict of interest, or personal gain.

4. Will initiate and complete the work within the applicable time frame after receipt of approval of the awarding agency.

5. Will comply with the Intergovernmental Personnel Act of 1970 (42 U.S.C. §§ 4728-4763) relating to prescribed standards for merit systems for programs funded under one of the nineteen statutes or regulations specified in Appendix A of OPM's Standards for a Merit System of Personnel Administration (5 C.F.R. 900, Subpart F).

6. Will comply with all Federal statutes relating to nondiscrimination. These include but are not limited to: (a) Title VI of the Civil Rights Act of 1964 (P.L. 88-352) which prohibits discrimination on the basis of race, color or national origin; (b) Title IX of the Education Amendments of 1972, as amended (20 U.S.C. §§ 1681-1683, and 1685-1686), which prohibits discrimination on the basis of sex; (c) Section 504 of the Rehabilitation Act of 1973, as amended (29 U.S.C. § 794), which prohibits discrimination on the basis of handicaps; (d) the Age Discrimination Act of 1975, as amended (42 U.S.C.§§ 6101-6107), which prohibits discrimination on the basis of age; (e) the Drug Abuse Office and Treatment Act of 1972 (P.L. 92-255), as amended, relating to nondiscrimination on the basis of drug abuse; (f) the Comprehensive Alcohol Abuse and Alcoholism Prevention, Treatment and Rehabilitation Act of 1970 (P.L. 91-616), as amended, relating to nondiscrimination on the basis of alcohol abuse or alcoholism; (g) §§ 523 and 527 of the Public Health Service Act of 1912 (42 U.S.C. 290 dd-3 and 290 ee-3), as amended, relating to confidentiality of alcohol and drug abuse patient records; (h) Title VIII of the Civil Rights Act of 1968 (42 U.S.C. § 3601 et seq.), as amended, relating to nondiscrimination in the sale, rental or financing of housing; (i) any other nondiscrimination provisions in the specific statute(s) under which application for Federal assistance is being made; and (j) the requirements of any other nondiscrimination statute(s) which may apply to the application.

7. Will comply, or has already complied, with the requirements of Titles II and III of the Uniform Relocation Assistance and Real Property Acquisition Policies Act of 1970 (P.L. 91-646) which provide for fair and equitable treatment of persons displaced or whose property is acquired as a result of Federal or federally assisted programs. These requirements apply to all interests in real property acquired for project purposes regardless of Federal participation in purchases.

8. Will comply with the provisions of the Hatch Act (5 U.S.C. §§ 1501-1508 and 7324-7328) which limit the political activities of employees whose principal employment activities are funded in whole or in part with Federal funds.

9. Will comply, as applicable, with the provisions of the Davis-Bacon Act (40 U.S.C. §§ 276a to 276a-7), the Copeland Act (40 U.S.C. § 276c and 18 U.S.C. §§ 874), and the Contract Work Hours and Safety Standards Act (40 U.S.C. §§ 327-333), regarding labor standards for federally assisted construction subagreements.

Standard Form 424B (4-88)
Prescribed by OMB Circular A-102

Authorized for Local Reproduction

10. Will comply, if applicable, with flood insurance purchase requirements of Section 102(a) of the Flood Disaster Protection Act of 1973 (P.L. 93-234) which requires recipients in a special flood hazard area to participate in the program andto purchase flood insurance if the total cost of insurable construction and acquisition is $10,000 or more.

11. Will comply with environmental standards which may be prescribed pursuant to the following: (a) institution of environmental quality control measures under the National Environmental Policy Act of 1969 (P.L. 91-190) and Executive Order (EO) 11514; (b) notification of violating facilities pursuant to EO 11738; (c) protection of wetlands pursuant to EO 11990; (d) evaluation of flood hazards in floodplains in accordance with EO 11988; (e) assurance of project consistency with the approved State management program developed under the Coastal Zone Management Act of 1972 (16 U.S.C. §§ 1451 et seq.); (f) conformity of Federal actions to State (Clear Air) Implementation Plans under Section 176(c) of the Clear Air Act of 1955, as amended (42 U.S.C. § 7401 et seq.); (g) protection of underground sources of drinking water under the Safe Drinking Water Act of 1974, as amended, (P.L. 93-523); and (h) protection of endangered species under the Endangered Species Act of 1973, as amended, (P.L. 93-205).

12. Will comply with the Wild and Scenic Rivers Act of 1968 (16 U.S.C. §§ 1271 et seq.) related to protecting components or potential components of the national wild and scenic rivers system.

13. Will assist the awarding agency in assuring compliance with Section 106 of the National Historic Preservation Act of 1966, as amended (16 U.S.C. 470), EO 11593 (identification and protection of historic properties), and the Archaeological and Historic Preservation Act of 1974 (16 U.S.C. 469a-1 et seq.).

14. Will comply with P.L. 93-348 regarding the protection of human subjects involved in research, development, and related activities supported by this award of assistance.

15. Will comply with the Laboratory Animal Welfare Act of 1966 (P.L. 89-544, as amended, 7 U.S.C. 2131 et seq.) pertaining to the care, handling, and treatment of warm blooded animals held for research, teaching, or other activities supported by this award of assistance.

16. Will comply with the Lead-Based Paint Poisoning Prevention Act (42 U.S.C. §§ 4801 et seq.) which prohibits the use of lead based paint in construction or rehabilitation of residence structures.

17. Will cause to be performed the required financial and compliance audits in accordance with the Single Audit Act of 1984.

18. Will comply with all applicable requirements of all other Federal laws, executive orders, regulations and policies governing this program.

SIGNATURE OF AUTHORIZED CERTIFYING OFFICIAL	TITLE
APPLICANT ORGANIZATION	DATE SUBMITTED

SF 424B (4-88) Back

CERTIFICATIONS REGARDING LOBBYING; DEBARMENT, SUSPENSION AND OTHER RESPONSIBILITY MATTERS; AND DRUG-FREE WORKPLACE REQUIREMENTS

Applicants should refer to the regulations cited below to determine the certification to which they are required to attest. Applicants should also review the instructions for certification included in the regulations before completing this form. Signature of this form provides for compliance with certification requirements under 34 CFR Part 82, "New Restrictions on Lobbying," and 34 CFR Part 85, "Government-wide Debarment and Suspension (Nonprocurement) and Government-wide Requirements for Drug-Free Workplace (Grants)." The certifications shall be treated as a material representation of fact upon which reliance will be placed when the Department of Education determines to award the covered transaction, grant, or cooperative agreement.

1. LOBBYING

As required by Section 1352, Title 31 of the U.S. Code, and implemented at 34 CFR Part 82, for persons entering into a grant or cooperative agreement over $100,000, as defined at 34 CFR Part 82, Sections 82.105 and 82.110, the applicant certifies that:

(a) No Federal appropriated funds have been paid or will be paid, by or on behalf of the undersigned, to any person for influencing or attempting to influence an officer or employee of any agency, a Member of Congress, an officer or employee of Congress, or an employee of a Member of Congress in connection with the making of any Federal grant, the entering into of any cooperative agreement, and the extension, continuation, renewal, amendment, or modification of any Federal grant or cooperative agreement;

(b) If any funds other than Federal appropriated funds have been paid or will be paid to any person for influencing or attempting to influence an officer or employee of any agency, a Member of Congress, an officer or employee of Congress, or an employee of a Member of Congress in connection with this Federal grant or cooperative agreement, the undersigned shall complete and submit Standard Form - LLL, "Disclosure Form to Report Lobbying," in accordance with its instructions;

(c) The undersigned shall require that the language of this certification be included in the award documents for all subawards at all tiers (including subgrants, contracts under grants and cooperative agreements, and subcontracts) and that all subrecipients shall certify and disclose accordingly.

2. DEBARMENT, SUSPENSION, AND OTHER RESPONSIBILITY MATTERS

As required by Executive Order 12549, Debarment and Suspension, and implemented at 34 CFR Part 85, for prospective participants in primary covered transactions, as defined at 34 CFR Part 85, Sections 85.105 and 85.110 –

A. The applicant certifies that it and its principals:

(a) Are not presently debarred, suspended, proposed for debarment, declared ineligible, or voluntarily excluded from covered transactions by any Federal department or agency;

(b) Have not within a three-year period preceding this application been convicted of or had a civil judgment rendered against them for commission of fraud or a criminal offense in connection with obtaining, attempting to obtain, or performing a public (Federal, State, or local) transaction or contract under a public transaction; violation of Federal or State antitrust statutes or commission of embezzlement, theft, forgery, bribery, falsification or destruction of records, making false statements, or receiving stolen property;

(c) Are not presently indicted for or otherwise criminally or civilly charged by a governmental entity (Federal, State, or local) with commission of any of the offenses enumerated in paragraph (1)(b) of this certification; and

(d) Have not within a three-year period preceding this application had one or more public transactions (Federal, State, or local) terminated for cause or default; and

B. Where the applicant is unable to certify to any of the statements in this certification, he or she shall attach an explanation to this application.

3. DRUG-FREE WORKPLACE (GRANTEES OTHER THAN INDIVIDUALS)

As required by the Drug-Free Workplace Act of 1988, and implemented at 34 CFR Part 85, Subpart F, for grantees, as defined at 34 CFR Part 85, Sections 85.605 and 85.610 –

A. The applicant certifies that it will or will continue to provide a drug-free workplace by:

(a) Publishing a statement notifying employees that the unlawful manufacture, distribution, dispensing, possession, or use of a controlled substance is prohibited in the grantee's workplace and specifying the actions that will be taken against employees for violation of such prohibition;

(b) Establishing an on-going drug-free awareness program to inform employees about–

(1) The dangers of drug abuse in the workplace;

(2) The grantee's policy of maintaining a drug-free workplace;

(3) Any available drug counseling, rehabilitation, and employee assistance programs; and

(4) The penalties that may be imposed upon employees for drug abuse violations occurring in the workplace;

(c) Making it a requirement that each employee to be engaged in the performance of the grant be given a copy of the statement required by paragraph (a);

(d) Notifying the employee in the statement required by paragraph (a) that, as a condition of employment under the grant, the employee will–

(1) Abide by the terms of the statement; and

(2) Notify the employer in writing of his or her conviction for a violation of a criminal drug statute occurring in the workplace no later than five calendar days after such conviction;

(e) Notifying the agency, in writing, within 10 calendar days after receiving notice under subparagraph (d)(2) from an employee or otherwise receiving actual notice of such conviction. Employers of convicted employees must provide notice, including position title, to: Director, Grants and Contracts Service, U.S. Department of Education, 400 Maryland Avenue, S.W. (Room 3124, GSA Regional Office

Building No. 3), Washington, DC 20202-4571. Notice shall include the identification number(s) of each affected grant;

(f) Taking one of the following actions, within 30 calendar days of receiving notice under subparagraph (d)(2), with respect to any employee who is so convicted—

(1) Taking appropriate personnel action against such an employee, up to and including termination, consistent with the requirements of the Rehabilitation Act of 1973, as amended; or

(2) Requiring such employee to participate satisfactorily in a drug abuse assistance or rehabilitation program approved for such purposes by a Federal, State, or local health, law enforcement, or other appropriate agency;

(g) Making a good faith effort to continue to maintain a drug-free workplace through implementation of paragraphs (a), (b), (c), (d), (e), and (f).

B. The grantee may insert in the space provided below the site(s) for the performance of work done in connection with the specific grant:

Place of Performance (Street address, city, county, state, zip code)

_____

_____

_____

Check ☐ if there are workplaces on file that are not identified here.

DRUG-FREE WORKPLACE (GRANTEES WHO ARE INDIVIDUALS)

As required by the Drug-Free Workplace Act of 1988, and implemented at 34 CFR Part 85, Subpart F, for grantees, as defined at 34 CFR Part 85, Sections 85.605 and 85.610 —

A. As a condition of the grant, I certify that I will not engage in the unlawful manufacture, distribution, dispensing, possession, or use of a controlled substance in conducting any activity with the grant; and

B. If convicted of a criminal drug offense resulting from a violation occurring during the conduct of any grant activity, I will report the conviction, in writing, within 10 calendar days of the conviction, to: Director, Grants and Contracts Service, U.S. Department of Education, 400 Maryland Avenue, S.W. (Room 3124, GSA Regional Office Building No. 3), Washington, DC 20202-4571. Notice shall include the identification number(s) of each affected grant.

As the duly authorized representative of the applicant, I hereby certify that the applicant will comply with the above certifications.

NAME OF APPLICANT	PR/AWARD NUMBER AND/OR PROJECT NAME
PRINTED NAME AND TITLE OF AUTHORIZED REPRESENTATIVE	
SIGNATURE	DATE

ED 80-0013, 6/90 (Replaces ED 80-0008, 12/89; ED Form GCS-008, (REV. 12/88); ED 80-0010, 5/90; and ED 80-0011, 5/90, which are obsolete)

Certification Regarding Debarment, Suspension, Ineligibility and Voluntary Exclusion -- Lower Tier Covered Transactions

This certification is required by the Department of Education regulations implementing Executive Order 12549, Debarment and Suspension, 34 CFR Part 85, for all lower tier transactions meeting the threshold and tier requirements stated at Section 85.110.

Instructions for Certification

1. By signing and submitting this proposal, the prospective lower tier participant is providing the certification set out below.

2. The certification in this clause is a material representation of fact upon which reliance was placed when this transaction was entered into. If it is later determined that the prospective lower tier participant knowingly rendered an erroneous certification, in addition to other remedies available to the Federal Government, the department or agency with which this transaction originated may pursue available remedies, including suspension and/or debarment.

3. The prospective lower tier participant shall provide immediate written notice to the person to which this proposal is submitted if at any time the prospective lower tier participant learns that its certification was erroneous when submitted or has become erroneous by reason of changed circumstances.

4. The terms "covered transaction," "debarred," "suspended," "ineligible," "lower tier covered transaction," "participant," "person," "primary covered transaction," "principal," "proposal," and "voluntarily excluded," as used in this clause, have the meanings set out in the Definitions and Coverage sections of rules implementing Executive Order 12549. You may contact the person to which this proposal is submitted for assistance in obtaining a copy of those regulations.

5. The prospective lower tier participant agrees by submitting this proposal that, should the proposed covered transaction be entered into, it shall not knowingly enter into any lower tier covered transaction with a person who is debarred, suspended, declared ineligible, or voluntarily excluded from participation in this covered transaction, unless authorized by the department or agency with which this transaction originated.

6. The prospective lower tier participant further agrees by submitting this proposal that it will include the clause titled "Certification Regarding Debarment, Suspension, Ineligibility, and Voluntary Exclusion--Lower Tier Covered Transactions," without modification, in all lower tier covered transactions and in all solicitations for lower tier covered transactions.

7. A participant in a covered transaction may rely upon a certification of a prospective participant in a lower tier covered transaction that it is not debarred, suspended, ineligible, or voluntarily excluded from the covered transaction, unless it knows that the certification is erroneous. A participant may decide the method and frequency by which it determines the eligibility of its principals. Each participant may, but is not required to, check the Nonprocurement List.

8. Nothing contained in the foregoing shall be construed to require establishment of a system of records in order to render in good faith the certification required by this clause. The knowledge and information of a participant is not required to exceed that which is normally possessed by a prudent person in the ordinary course of business dealings.

9. Except for transactions authorized under paragraph 5 of these instructions, if a participant in a covered transaction knowingly enters into a lower tier covered transaction with a person who is suspended, debarred, ineligible, or voluntarily excluded from participation in this transaction, in addition to other remedies available to the Federal Government, the department or agency with which this transaction originated may pursue available remedies, including suspension and/or debarment.

Certification

(1) The prospective lower tier participant certifies, by submission of this proposal, that neither it nor its principals are presently debarred, suspended, proposed for debarment, declared ineligible, or voluntarily excluded from participation in this transaction by any Federal department or agency.

(2) Where the prospective lower tier participant is unable to certify to any of the statements in this certification, such prospective participant shall attach an explanation to this proposal.

NAME OF APPLICANT	PR/AWARD NUMBER AND/OR PROJECT NAME
PRINTED NAME AND TITLE OF AUTHORIZED REPRESENTATIVE	
SIGNATURE	DATE

ED 80-0014, 9/90 (Replaces GCS-009 (REV. 12/88), which is obsolete)

DISCLOSURE OF LOBBYING ACTIVITIES

Approved by OMB
0346-0046

Complete this form to disclose lobbying activities pursuant to 31 U.S.C. 1352
(See reverse for public burden disclosure.)

1. Type of Federal Action:
☐ a. contract
b. grant
c. cooperative agreement
d. loan
e. loan guarantee
f. loan insurance

2. Status of Federal Action:
☐ a. bid/offer/application
b. initial award
c. post-award

3. Report Type:
☐ a. initial filing
b. material change
For Material Change Only:
year _____ quarter _____
date of last report _____

4. Name and Address of Reporting Entity:
☐ Prime ☐ Subawardee
Tier _____, *if known:*
Congressional District, *if known:*

5. If Reporting Entity in No. 4 is Subawardee, Enter Name and Address of Prime:
Congressional District, *if known:*

6. Federal Department/Agency:

7. Federal Program Name/Description:
CFDA Number, *if applicable:* _____

8. Federal Action Number, *if known:*

9. Award Amount, *if known:*
$

10. a. Name and Address of Lobbying Entity
(if individual, last name, first name, MI):

b. Individuals Performing Services *(including address if different from No. 10a)*
(last name, first name, MI):

(attach Continuation Sheet(s) SF-LLL-A, if necessary)

11. Amount of Payment *(check all that apply):*
$ _____ ☐ actual ☐ planned

12. Form of Payment *(check all that apply):*
☐ a. cash
☐ b. in-kind; specify: nature _____
value _____

13. Type of Payment *(check all that apply):*
☐ a. retainer
☐ b. one-time fee
☐ c. commission
☐ d. contingent fee
☐ e. deferred
☐ f. other; specify: _____

14. Brief Description of Services Performed or to be Performed and Date(s) of Service, including officer(s), employee(s), or Member(s) contacted, for Payment Indicated in Item 11:

(attach Continuation Sheet(s) SF-LLL-A, if necessary)

15. Continuation Sheet(s) SF-LLL-A attached: ☐ Yes ☐ No

16. Information requested through this form is authorized by title 31 U.S.C. section 1352. This disclosure of lobbying activities is a material representation of fact upon which reliance was placed by the tier above when this transaction was made or entered into. This disclosure is required pursuant to 31 U.S.C. 1352. This information will be reported to the Congress semi-annually and will be available for public inspection. Any person who fails to file the required disclosure shall be subject to a civil penalty of not less than $10,000 and not more than $100,000 for each such failure.

Signature: _____
Print Name: _____
Title: _____
Telephone No.: _____ Date: _____

Federal Use Only:

Authorized for Local Reproduction
Standard Form - LLL

INSTRUCTIONS FOR COMPLETION OF SF-LLL, DISCLOSURE OF LOBBYING ACTIVITIES

This disclosure form shall be completed by the reporting entity, whether subawardee or prime Federal recipient, at the initiation or receipt of a covered Federal action, or a material change to a previous filing, pursuant to title 31 U.S.C. section 1352. The filing of a form is required for each payment or agreement to make payment to any lobbying entity for influencing or attempting to influence an officer or employee of any agency, a Member of Congress, an officer or employee of Congress, or an employee of a Member of Congress in connection with a covered Federal action. Use the SF-LLL-A Continuation Sheet for additional information if the space on the form is inadequate. Complete all items that apply for both the initial filing and material change report. Refer to the implementing guidance published by the Office of Management and Budget for additional information.

1. Identify the type of covered Federal action for which lobbying activity is and/or has been secured to influence the outcome of a covered Federal action.

2. Identify the status of the covered Federal action.

3. Identify the appropriate classification of this report. If this is a followup report caused by a material change to the information previously reported, enter the year and quarter in which the change occurred. Enter the date of the last previously submitted report by this reporting entity for this covered Federal action.

4. Enter the full name, address, city, state and zip code of the reporting entity. Include Congressional District, if known. Check the appropriate classification of the reporting entity that designates if it is, or expects to be, a prime or subaward recipient. Identify the tier of the subawardee, e.g., the first subawardee of the prime is the 1st tier. Subawards include but are not limited to subcontracts, subgrants and contract awards under grants.

5. If the organization filing the report in item 4 checks "Subawardee", then enter the full name, address, city, state and zip code of the prime Federal recipient. Include Congressional District, if known.

6. Enter the name of the Federal agency making the award or loan commitment. Include at least one organizational level below agency name, if known. For example, Department of Transportation, United States Coast Guard.

7. Enter the Federal program name or description for the covered Federal action (item 1). If known, enter the full Catalog of Federal Domestic Assistance (CFDA) number for grants, cooperative agreements, loans, and loan commitments.

8. Enter the most appropriate Federal identifying number available for the Federal action identified in item 1 (e.g., Request for Proposal (RFP) number; Invitation for Bid (IFB) number; grant announcement number; the contract, grant, or loan award number; the application/proposal control number assigned by the Federal agency). Include prefixes, e.g., "RFP-DE-90-001."

9. For a covered Federal action where there has been an award or loan commitment by the Federal agency, enter the Federal amount of the award/loan commitment for the prime entity identified in item 4 or 5.

10. (a) Enter the full name, address, city, state and zip code of the lobbying entity engaged by the reporting entity identified in item 4 to influence the covered Federal action.

    (b) Enter the full names of the individual(s) performing services, and include full address if different from 10 (a). Enter Last Name, First Name, and Middle Initial (MI).

11. Enter the amount of compensation paid or reasonably expected to be paid by the reporting entity (item 4) to the lobbying entity (item 10). Indicate whether the payment has been made (actual) or will be made (planned). Check all boxes that apply. If this is a material change report, enter the cumulative amount of payment made or planned to be made.

12. Check the appropriate box(es). Check all boxes that apply. If payment is made through an in-kind contribution, specify the nature and value of the in-kind payment.

13. Check the appropriate box(es). Check all boxes that apply. If other, specify nature.

14. Provide a specific and detailed description of the services that the lobbyist has performed, or will be expected to perform, and the date(s) of any services rendered. Include all preparatory and related activity, not just time spent in actual contact with Federal officials. Identify the Federal official(s) or employee(s) contacted or the officer(s), employee(s), or Member(s) of Congress that were contacted.

15. Check whether or not a SF-LLL-A Continuation Sheet(s) is attached.

16. The certifying official shall sign and date the form, print his/her name, title, and telephone number.

Public reporting burden for this collection of information is estimated to average 30 minutes per response, including time for reviewing instructions, searching existing data sources, gathering and maintaining the data needed, and completing and reviewing the collection of information. Send comments regarding the burden estimate or any other aspect of this collection of information, including suggestions for reducing this burden, to the Office of Management and Budget, Paperwork Reduction Project (0348-0046), Washington, D.C. 20503.

DISCLOSURE OF LOBBYING ACTIVITIES
CONTINUATION SHEET

Approved by OM
0348-0046

Reporting Entity: _____ **Page** _____ **of** _____

[FR Doc. 92-19602 Filed 8-17-92; 8:45 am]
BILLING CODE 4000-01-C

Authorized for Local Reproduction
Standard Form - LLL-A

federal register

Tuesday
August 18, 1992

Part VIII

Department of Health and Human Services

Agency for Toxic Substances and Disease Registry

Interim Petitioned Public Health Assessment Response Procedures and Decision Criteria; Notice

DEPARTMENT OF HEALTH AND HUMAN SERVICES

Agency for Toxic Substances and Disease Registry

[ATSDR-50]

Interim Petitioned Public Health Assessment Response Procedures and Decision Criteria

AGENCY: Agency for Toxic Substances and Disease Registry (ATSDR), Public Health Service (PHS), Department of Health and Human Services (HHS).

ACTION: Notice of interim procedures; request for comments.

SUMMARY: This notice describes the interim procedures ATSDR will use to respond to requests for public health assessments and to determine the priority for action at sites for which public health assessments are indicated. The ATSDR regulation, 42 CFR part 90, describes in general terms how ATSDR is to respond to requests for public health assessments of hazardous waste releases. Comments are requested on these interim procedures to assist ATSDR in addressing requests for public health assessments and for determining priorities for initiating public health assessments when requests are accepted.

DATES: Comments must be received on or before October 19, 1992.

ADDRESSES: Written comments in response to this notice should bear the docket control number ATSDR-50, and should be submitted to: Robert C. Williams, P.E., Director, Division of Health Assessment and Consultation, Agency for Toxic Substances and Disease Registry, 1600 Clifton Road, NE., Mailstop E-32, Atlanta, Georgia 30333.

FOR FURTHER INFORMATION CONTACT: Robert C. Williams, telephone (404) 639-0610.

SUPPLEMENTARY INFORMATION: ATSDR is required under Section 104(i)(6)(A) of the Comprehensive Environmental Response, Compensation, and Liability Act (CERCLA) (42 U.S.C. 9604(i)(6)(A)) to perform public health assessments of sites listed on the U.S. Environmental Protection Agency's (EPA) National Priorities List (NPL). Section 104(i)(6)(B) authorizes the Administrator of ATSDR to perform public health assessments of releases or facilities for which individual persons or licensed physicians provide information that individuals have been exposed to a hazardous substance, and for which the probable source of such exposure is a release, as defined under CERCLA. In addition, section 3019(c) of the Resource Conservation and Recovery Act (RCRA) (42 U.S.C. 6939a(c)) permits any member of the public to submit evidence of releases of or exposure to hazardous constituents in a landfill or surface impoundment, which ATSDR can use as the basis for a public health assessment.

The general administrative functions, practices, and procedures that ATSDR uses in conducting public health assessments are included in the regulation "Health Assessment and Health Effects Studies of Hazardous Substances Releases and Facilities," 42 CFR part 90, published at 55 FR 5136, February 13, 1990. Procedures for requesting a public health assessment and the information that must be provided in such a request are described in 42 CFR 90.3 and 90.4, respectively. Section 90.5 describes in general terms how ATSDR responds to requests. The proposed interim procedures provide additional detail and describe procedures ATSDR will use to accept or deny requests from the public for public health assessments of hazardous substance releases, and describe a ranking scheme ATSDR will use to determine priorities for initiating public health assessments when requests are accepted. The purpose of these procedures is to clarify the decision process that ATSDR has developed for responding to requests. However, as stated in the ATSDR regulations (42 CFR 90.1(a)), the final decision regarding the Agency's response to a request is at the discretion of the Agency.

ATSDR uses the term "petition" to describe a written request from the public for a public health assessment. The use of that term in place of "request" adds clarity and conciseness to the proposed interim procedures. Other definitions used in the following sections are found in appendix I.

To determine if there is a reasonable basis for conducting a public health assessment, § 90.5 directs ATSDR to consider the following factors: Whether individuals have been exposed to hazardous substances; the location, concentration, and toxicity of the hazardous substance or substances; the potential for further human exposure; the recommendations of other governmental agencies; and other ATSDR priorities. Although ATSDR is not required to conduct a public health assessment in response to such petitions, the Agency does have a responsibility to provide a written explanation to the petitioner if a public health assessment is not performed.

The factors described here, which were previously used as guidance for Agency decisions regarding petitions, are incorporated in the proposed decision criteria and ranking scheme. In the proposed decision criteria and ranking scheme, ATSDR incorporates the same factors and describes the procedures it will use. The decision criteria are applied in two phases. The decision elements of the first phase of the decision criteria are procedural and are used to determine: (1) Whether ATSDR has already prepared a public health assessment that addresses the concerns stated in the petition; (2) if there has been a release into the environment; and (3) if a public health assessment is the most appropriate response.

The decision elements of the second phase of the decision criteria are site-specific and health-based. Specifically, the criteria are used to determine if there are community health concerns; the location, concentration, and toxicity of the hazardous substance or substances that may be present; if there is an exposed or potentially exposed population; and if there is a plausible link between exposures and health effects that may exist. ATSDR considers recommendations from other government agencies, available resources, and other ATSDR priorities during the site ranking process.

The site ranking scheme uses available site-specific information on chemical hazards, population size and demographic characteristics, exposure pathways, health outcome data, and community health concerns related to the petition. The ranking scheme is used to assign a relative rank to petitions for which ATSDR has determined there is a reasonable basis for performing a public health assessment. Sites judged to be of greater public health concern will have a higher priority for ATSDR action. A site ranking is not a definitive assessment of the health issues associated with human exposures to hazardous substance releases at a site and does not supersede any other ATSDR document.

The ATSDR site ranking scheme is not intended to duplicate or replace the hazard ranking system promulgated under the National Contingency Plan (40 CFR part 300) and used by EPA to evaluate the relative risks to human health and the environment of uncontrolled hazardous waste sites. There are several important differences between the EPA hazard ranking system and the ATSDR site ranking scheme. The EPA hazard ranking scheme requires extensive environmental sampling to determine if a particular hazardous waste site meets minimum criteria for inclusion on the NPL. It also includes information on the impact of

hazardous waste sites on the environment. Community health concerns information and health outcome data are not considered in the EPA hazard ranking scheme.

The ATSDR site ranking scheme addresses human health and exposure to hazardous substances and does not consider impact on the environment except where related to public health. Although the ATSDR site ranking scheme does consider environmental sampling data, ATSDR frequently receives petitions for public health assessments of hazardous substance releases for which there may be no or very little environmental sampling data. Community health concerns or available health outcome data for some sites may dictate that those sites receive a higher priority for studies or actions. The ATSDR site ranking scheme incorporates available environmental and health outcome data and community concerns information and provides ATSDR with a method for judging the actual or potential health hazard of one accepted petition site relative to other accepted petition sites. It does not establish minimum criteria that must be met before a public health assessment can be prepared.

Receiving and Acknowledging Petitions

Upon receiving a petition, ATSDR will determine if the Agency has performed any health-related activities pertaining to the release noted in the petition and begin collecting available data and information. ATSDR will contact the petitioner(s) and other members of the site community, including site or facility owners or operators, who are knowledgeable about the release or the facility; the ATSDR regional representative assigned to the region from which the petition originated; and persons within ATSDR headquarters, the respective state and local health and environmental agencies, the EPA regional office, or other Federal agencies knowledgeable about the release or facility to collect readily available and appropriate environmental and health outcome data and community health concerns information relevant to the petition.

ATSDR will prepare an acknowledgment letter, within 10 days of receiving the petition, stating that the petition has been received and that ATSDR is evaluating it. The acknowledgment letter also will include a description of ATSDR's health-related authorities under CERCLA or RCRA; the content and purpose of the public health assessment, and a statement that ATSDR will notify the petitioner within 180 calendar days of receiving the petition whether or not a public health assessment will be conducted and the rational for the decision.

If ATSDR receives a letter that does not include the information specified by 42 CFR 90.4 and ATSDR cannot determine if the letter is a petition for a public health assessment, or if the letter is written in a way that ATSDR cannot determine what ATSDR action is being requested, ATSDR will prepare a response letter within 10 days of receiving the letter stating that ATSDR does not have sufficient information to consider the letter a petition for a public health assessment. The response letter will ask the petitioner to provide the needed additional information or to clarify the request.

Applying Phase One Decision Criteria

ATSDR will review readily available and appropriate environmental and health outcome data and community health concerns information relevant to the petition and apply the phase one decision criteria. Those criteria and follow-up actions are as follows:

1. Has ATSDR prepared, or is ATSDR preparing, a public health assessment, or equivalent document that addresses the health concerns stated in the petition?

If Yes, provide a copy of the public health assessment, or equivalent document to the petitioner within 30 days of receiving the petition, or, if being prepared, prepare a response to the petitioner, within 30 days of receiving the petition, providing an estimate of when the public health assessment or equivalent document will be available for public release. ATSDR will provide the petitioner a copy of the public health assessment as soon as it is available for public release.

If No, proceed with revaluating the petition.

2. Has a hazardous substance been released into the environment?

If Yes, proceed with evaluating the petition.

If No, do not proceed with evaluating the petition. Prepare a response to the petitioner, within 30 days of receiving the petition, stating that there must be a hazardous substance release into the environment before ATSDR can perform a public health assessment.

3. Is an ATSDR public health assessment or other ATSDR program activity an appropriate response to the petition?

If Yes, proceed with evaluating the petition.

If No, determine the appropriate response (i.e., a response from another Federal, state, or local health or environmental authority). Prepare a response to the petitioner, within 30 days of receiving the petition, stating that a public health assessment will not be performed and that the petition has been referred to more appropriate authority for response.

If ATSDR decides to continue evaluating the petition, it will conduct a site visit and, when possible, meet with the petitioner(s) and other members of the site community, including site or facility owners or operators; and persons within the respective state and local health and environmental agencies, the EPA regional office, or other Federal agencies knowledgeable about the release or facility to collect any additional available data and information pertaining to the petition

Applying Phase Two Decision Criteria

ATSDR will review data and information collected for each petition during the petition site visit and apply the phase two decision criteria. The phase two decision criteria and follow-up actions are as follows:

1. Are the location, concentration, and toxicity of the hazardous substances related to the petition, site, or release possibly of public health concern?

If Yes, proceed with evaluating the petition.

If No, (as supported by environmental sampling data or toxicologic and health outcome data), do not proceed with evaluating the petition.

2. Is there an exposed or potentially exposed population as indicated in the petition and as determined by evaluating the human exposure pathways for the hazardous substance release(s)?

If Yes, proceed with evaluating the petition.

If No, (as supported by environmental and, if available, biologic monitoring data), do not proceed with evaluating the petition.

3. Is there a plausible relationship between possible human exposure to a release of hazardous substances and community health concerns or adverse health outcomes?

If Yes, proceed with evaluating the petition.

If No (as supported by health outcome data and community health concerns information), do not proceed with evaluating the petition.

If each phase two criterion is answered "yes," ATSDR will make a decision either to conduct a public health assessment or undertake a more appropriate public health action, such as a public health advisory, public health consultation, or health effects study. If ATSDR decides not to proceed with

evaluating the petition, ATSDR will prepare a response to the petitioner, within 180 calendar days of the date ATSDR received the petition, stating why a public health assessment or another public health activity will not be conducted.

For each petition, ATSDR will prepare a decision record describing the basis for each decision (whether or not to perform a public health assessment or other public health action) and prepare a response letter describing its decision.

ATSDR will provide a response letter to the petitioner within 180 calendar days of the date of the ATSDR acknowledgment letter. The letter will notify the petitioner of the decision to conduct a public health assessment or another public health activity. For a petition site for which ATSDR elects to perform a public health assessment, ATSDR will provide an estimate of when the public health assessment will be completed and other information pertaining to ATSDR's evaluation of the petition.

If additional data or information from the petitioner or some other source are needed to determine if a public health assessment or other appropriate public health action is indicated, ATSDR will prepare a letter to the petitioner, within 180 calendar days of the date the acknowledgment letter was mailed, stating that a decision will be deferred until ATSDR has received the additional data or information.

Establishing Priorities for Public Health Assessment Response

At times, ATSDR may be unable to respond immediately following a decision to conduct a public health assessment. In those circumstances where ATSDR resources are committed to previously scheduled public health assessments or other activities, ATSDR will use the proposed site ranking scheme to determine which petition sites are of greatest public health concern and should receive public health assessments first. In addition to the site ranking scheme score, the Administrator will consider the resources available, other ATSDR priorities, and recommendations of other government agencies to determine the order in which public health assessments will be performed. Petition sites receiving higher scores will receive higher priority for conduct of public health assessments.

The site ranking scheme considers site-specific factors that are similar to the information evaluated in public health assessments. The factors include chemical and radiologic hazards; population size and demographic characteristics; exposure pathways; health outcome data; and community health concerns related to the petition. The site ranking scheme scoring sheet and instructions for completing it are presented in appendix II.

On a quarterly basis, ATSDR will publish in the **Federal Register** a list of all petition sites for which ATSDR has decided to conduct public health assessments.

Dated: August 7, 1992.

William L. Roper,

Administrator, Agency for Toxic Substances and Disease Registry.

Appendix I

Definitions

"ATSDR" means the Agency for Toxic Substances and Disease Registry, Public Health Service, U.S. Department of Health and Human Services.

"Administrator" means the Administrator of the Agency for Toxic Substances and Disease Registry or designee.

"CERCLA" means the Comprehensive Environmental Response, Compensation, and Liability Act, 42 U.S.C. 9601–9675.

"Decision Record" is a brief narrative report documenting the Agency's decision regarding its response to a petition and the rationale supporting the decision.

"EPA" means the U.S. Environmental Protection Agency.

"Hazardous Substance" is defined in 42 U.S.C. 9601(14). In addition, the term includes any pollutant or contaminant that the Administrator determines is appropriate for carrying out his or her responsibilities under CERCLA.

"Health Effects Study" means research, investigation, or study performed by ATSDR or other parties pursuant to an agreement with ATSDR to evaluate the health effects of exposure to hazardous substances at specific sites. The term includes, but is not limited to, epidemiologic studies, exposure and disease registries, and health surveillance programs. The term does not include public health assessments.

"Person" means an individual, firm, corporation, association, partnership, consortium, joint venture, commercial entity, state, municipality, commission, political subdivision of a state, Indian tribe, any interstate body, or the United States government.

"Petition" is a request submitted to ATSDR by a licensed physician or other individual (person), under authority of section 104(i)(6)(B) of CERCLA or Section 3019(c) of RCRA, to conduct a public health assessment or to evaluate the health implications of exposures to a hazardous substance release.

"Petition Site" is the site where the hazardous substance release identified in a petition is located.

"Petitioner" is the person submitting a petition to ATSDR. The identity of an individual or individuals submitting a petition is confidential. However, the identity of any individual or individuals submitting a petition on behalf of or in an official capacity for a firm, corporation, association, partnership, consortium, joint venture, commercial entity, state, municipality, commission, political subdivision of a state, Indian tribe, any interstate body, or the United States government is not confidential.

"Phase One Decision Criteria" are procedural criteria used to determine if: (1) ATSDR has already completed a public health assessment or other document that addresses the concerns expressed in the petition; (2) there has been a hazardous substance release into the environment; and (3) an ATSDR public health assessment is the most appropriate response to the petition.

"Phase Two Decision Criteria" are health-based criteria used to evaluate the chemical hazard, exposure potential, and plausible health effects identified in a petition.

"Public Health Advisory" is a statement by ATSDR containing a finding that a release poses a significant risk to human health and recommending measures to reduce exposure and eliminate or substantially mitigate the significant risk to human health.

"Public Health Assessment" means the evaluation of data and information on the release of hazardous substances into the environment in order to assess any current or future impact on public health; develop public health advisories or other recommendations; and identify studies or actions needed to evaluate and mitigate or prevent human health effects. The primary components of a public health assessment are environmental and Health Outcome Data and Community Health Concerns information.

"Public Health Consultation" is a written or oral response by ATSDR to a request for information about health risks posed by a specific site, chemical release, or hazardous material.

"RCRA" means the Resource Conservation and Recovery Act, which is codified as the Solid Waste Disposal Act, 42 U.S.C. 6901–6992.

"Release" is defined in 42 U.S.C. 9601(22).

"Site Ranking Scheme" is a ranking scheme used to determine relative priorities for addressing sites for which

ATSDR intends to conduct public health assessments.

Appendix II

Site Ranking Scheme Scoring Sheet

(Instructions for completing the scoring sheet are attached)

I. Background

Site Name: _____
Primary Public Health Assessor: _____
EPA Region: _____
State: _____
CERCLIS No.: _____
ATSDR Cost Rec. No.: _____

II. Hazardous Substances

(Maximum Score=30)

A. Documented Contamination of Environmental Media

(Corresponds to Part A., "Contam. (Y/N)", of Matrix)

If "YES" for any environmental medium (groundwater, soil/sediment, air, surface water, food chain, sludge/wastes), then complete Part B, Chemical or Radiological Hazard, for that medium.

If "NO" for any environmental medium (listed previously), then do not complete Part B for that medium.

B. Chemical or Radiological Hazard

(Corresponds to Part B. of Matrix)

For each environmental medium, determine whether contaminant concentrations represent an acute, chronic, unknown, or no hazard potential. Indicate with the letter P (Past), C (Current), or F (Future) whether the contaminants pose a past, current, or future hazard potential. The maximum score is the sum of scores for all environmental media. If physical hazards are present at the site, indicate type and extent of physical hazards under "VI. General Comments."

	A. Contam.	B. Chemical or Radiological Hazard			
	(Y/N)	Acute	Chronic	Unknown	None
Medium:					
Groundwater	_____	(5)_____	(3)_____	(2)_____	(0)_____
Soil/Sediment	_____	(5)_____	(3)_____	(2)_____	(0)_____
Air	_____	(5)_____	(3)_____	(2)_____	(0)_____
Surface water	_____	(5)_____	(3)_____	(2)_____	(0)_____
Food Chain	_____	(5)_____	(3)_____	(2)_____	(0)_____
Sludge/Waste	_____	(5)_____	(3)_____	(2)_____	(0)_____
Total (Maximum Score=30)	_____				

III. Population

(Maximum Score=20)

Note: Scoring of items in this section is based on numerical ranges; interpolation of scores within a specified scoring range is permissible.

A. Total Site Population

(Maximum Score=10)

Refers to total number of persons residing within 1 mile of the site.

None	(0)_____
< 50 persons	(1–5)_____
> 50 persons	(6–10)_____
Total (Maximum Score=10)	_____

B. Demographics: Potentially Sensitive Subpopulations

(Maximum Score=10)

Score 2 points each if the public areas listed here are within 1 mile of the site. Score 2 points if minority communities are ≥ 15% of the total population.

Day care center	(2)_____
Elderly care (nursing) home	(2)_____
Hospital or community health-care center	(2)_____
School (pre-school—high school)	(2)_____
Minority communities (≥ 15% of population)	(2)_____
Total (Maximum Score=10)	_____

IV. Exposures

(Maximum Score=60)

Note: Scoring of items in this section is based on numerical ranges; interpolation of scores within a specified scoring range is permissible.

A. Human Exposure Indicated by Environmental Sampling Data

(Maximum Score=30)

Indicate as highly probable (6–10), potential or possible (1–5), or no apparent (0) the possibility for human exposure via all possible routes of exposure to human exposure media. "Air" medium includes air particulates or vapors; "Food" indicates food-chain entities. The total score, which cannot exceed 30 points, is the sum of scores for the pathways. The notation "—" is used in the matrix to indicate human exposure routes and exposure media combinations not evaluated and not scored.

Rt of Exposure	Human Exposure Medium					
	Air	GW	Soil/Sed	SW	Food	Sldge/Waste
Ingestion	—					
Inhalation		—	—	—	—	—
Dermal					—	
Total (Maximum Score=30)	_____					

B. Biological Data

(Maximum Score=30)

Score Part 1 of this section first. If "Yes" is the answer to Part 1, score Part 2. If "No" is the answer to Part 1, do not score Part 2, but go to section V. The total score is the score for Part 1 if only Part 1 is evaluated; if both parts are evaluated, the total score is the sum of scores for Part 1 and Part 2.

Part 1

Site-related biological data (e.g., blood, urine contaminant analyses) of adequate quality are available for the site population?

If Yes..... (10)_____
(Go To section IV B. Part 2)
If No..... (0)_____

(Go To section V)

Part 2

Do the biological data indicate that significant human exposures (e.g., above the normal range) are likely to have occurred?

If Yes..... (20)_____
If No..... (0)_____
Total (Maximum Score=30).. _____

Comments on Biological Data (e.g., quality and quantity of available data):_____

_____

_____

V. Health Outcome Data and Community Health Concerns (Maximum Score=30)

Note: The scoring of Health Outcome Data and Community Health Concerns is based on numerical ranges; interpolation of scores within a specified scoring range is permissible.

This section considers two major components, Health Outcome Data and Community Health Concerns, shown on the horizontal axis of the matrix (see below). The Community Health Concerns component has a multiplier for biological plausibility. Score as High (6–10), Medium (4–5), or Low (0–3) the extent of community health concerns about the site. Multiply the Community Health Concerns score by the appropriate plausibility multiplier—Two (2), One (1), or Zero (0). *Plausibility* is the extent to which biological plausibility can be established between contaminant exposures and the community health concerns. Score as High (6–10), Medium (4–5), or Low (0–3) the extent to which Health Outcome Data are available to evaluate community concerns and plausible toxicological endpoints for site contaminants (see scoring sheet instructions for more detail).

The total score is the sum of the 2 scores; one score is the product of the Community Health Concerns score and the multiplier for Plausibility; the other is the Health Outcome Data score.

```
          |Community Health Concerns X Plausibility|

Score  (Use one line only)

 High     |              X     2      = _____  |
 (6-10)   |              X     1      = _____  |
          |              X     0      = _____  |
-------------------------------------------------------------
 Medium   |              X     2      = _____  |
 (4-5)    |              X     1      = _____  |
          |              X     0      = _____  |
-------------------------------------------------------------
 Low      |              X     2      = _____  |
 (0-3)    |              X     1      = _____  |
          |              X     0      = _____  |
-------------------------------------------------------------
          |Health Outcome Data                  |

 Score (Use one line only)

 High (6-10)                          = _____  |
    OR
 Medium (4-5)                         = _____  |
    OR
 Low (0-3)                            = _____  |

                        Total (Maximum Score=30)_____
```

Comments on Health Outcome Data and Community Health Concerns:

_____

_____

VI. Total Site Score Using SRS—Scoring Sheet (Maximum=140)

Scores	Total
II. Hazardous Substances	(30) ____
III. Population	(20) ____
IV. Exposures	(60) ____
V. Health Outcome Data/Community Health Concerns	(30) ____
Total Site Score	____

General Comments (Indicate any additional information that may be important to consider in scoring the site. Specify the section to which the comment applies):

_____

_____

_____

Site Ranking Scheme (SRS)—Scoring Sheet Instructions for Completion

General Instructions

The site ranking scheme (SRS) scoring sheet is designed to assist in evaluating individual hazardous or radioactive waste sites (or petitions, also referred to as sites) using the site ranking scheme (SRS). The SRS scoring sheet is used to derive a total score (with a maximum of 140 points) for each site. The score is intended to provide a relative basis for comparing individual sites. Hazardous waste sites that score the highest may involve sites or environmental conditions that are of greatest public health concern and, therefore, require immediate health response or followup.

The SRS is not intended to reflect quantitative public health risks, nor is it intended to take the place of any other ATSDR health document, such as the ATSDR public health assessment.

The sampling data and information needed to complete the SRS scoring

sheet should be available from the petition site report prepared by the petition site assessor assigned to the site.

All sections (I. through VI.) of the scoring sheet should be evaluated for each site, unless the data and information necessary to evaluate the section are not available. If the section is not evaluated for those reasons, that fact should be noted on the SRS scoring sheet. The number in parentheses next to the space or in the matrix box represents the maximum possible score for that item.

Specific Instructions

I. Background

Enter the site name (or appropriate petition identifier), EPA region, state, the EPA CERCLIS number (if available), and ATSDR cost recovery number. Enter the names of the person(s) designated as the petition site assessor(s) for the site.

II. Hazardous Substances

The Hazardous Substances section is evaluated in two parts, part A and part B. Part A addresses whether there is documented chemical or radiologic contamination of environmental media—groundwater, soil/sediment, air, surface water, food chain, and sludge/wastes—as determined from environmental sampling data. If there is documented contamination, or strong evidence of a potential for contamination of a particular environmental medium, the medium is evaluated in part B, Chemical or Radiological Hazard. If there is no documented contamination of the environmental medium, the environmental medium is not evaluated in part B.

Part B addresses the intrinsic toxicity of the contaminants detected in environmental media and the concentrations of the contaminants. Adequate environmental sampling data must be available to support a score of "none" (no hazard potential). A chemical or radiologic hazard scored as "unknown" is one for which the available scientific and medical literature is not adequate to determine the hazard potential. The ATSDR Public Health Assessment Guidance Manual is to be used to assist in determining whether the maximum contaminant concentrations at the site represent an acute, chronic, unknown, or no hazard potential.

The letter P (Past), C (Current), or F (Future) is used to designate whether the chemical contaminants may pose a past, current, or future hazard potential. The letter is written on the blank to the right of the score (in parentheses). Although the letter designation has no impact on the site score, it is used to characterize whether the potential chemical or radiologic hazard may have been of concern in the past or whether the hazard may be a current or future condition at the site.

An individual environmental medium may be scored for only one hazard potential category—acute, chronic, unknown, or none. Although a contaminant that poses an acute hazard also could pose a chronic hazard, the distinction is made between the two categories of hazards in order to identify the environmental media representing an acute hazard potential and, therefore, requiring immediate health follow-up activities (e.g., recommendations for emergency response).

Add the individual scores of five (5), three (3), two (2), or zero (0) for each environmental medium to derive a total score for Hazardous Substances section. The maximum score possible is 30.

III. Population

Population is evaluated using two main categories, Total Site Population and Demographics. The scoring of items is based on numerical ranges; interpolation of scores within a specified scoring range is permissible. The scores for the two categories are combined to derive a total score (maximum of 20).

A. Total Site Population

The Total Site Population refers to the human population residing within 1 mile of the site. The total population may be estimated using 1980 and 1990 U.S. Census data for the geographic areas (e.g., zip code, tracts, blocks) defined as 1 mile from the site or using direct field observation during the site visit and initial background data collection for the site.

Direct field observation involves counting homes within a 1-mile radius of the site and multiplying the number of homes by the appropriate number of persons per home as reported in the Federal or state censuses for that geographic area (e.g., zip code, tracts, blocks).

Three scoring categories are defined: zero (o) points when no persons are present, one to five (1–5) points for 50 persons or fewer, and from six to ten (6–10) points for more than 50 persons.

B. Demographics: Potentially Sensitive Subpopulations

The Demographics section is evaluated by identifying public use areas within 1 mile of the site. A score of two (2) is assigned for each of the following types of public use areas within 1 mile of the site: Day care center, elderly care (nursing) home, hospital, or community health-care center, and school (pre-school through high school). An additional two (2) points are assigned if the total population comprises at least 15% minority communities. Minority communities are defined by race and ethnicity using the U.S. Census nomenclature, including American Indian/Eskimo/Aleut, Black, Asian/Pacific Islander, other Persons (race), and persons of Spanish Origin (ethnicity).

The total score is the sum of scores for all categories. The maximum score for Demographics is 10.

IV. Exposures

The potential for human exposure is evaluated using two main categories, Environmental Sampling Data and Biological Data. The scoring of items within each category is based on numerical ranges; interpolation of scores within a specified scoring range is permissible. The scores for the two categories are combined to derive a total score (maximum of 60) for Exposures.

A. Human Exposure Indicated by Environmental Sampling Data

This section is evaluated using a matrix. On the horizontal axis are the human exposure media, including air (Air), groundwater (GW), soil/sediment (Soil/Sed), surface water (SW), food-chain entities (Food), and sludge/waste (Sludge/Waste). On the vertical axis are the routes of human exposure, including ingestion, inhalation, and dermal contact. The notation "---" is used in the matrix for human exposure routes and exposure media not evaluated and not scored.

Available sampling data and information for potentially exposed individuals are used to determine the primary human exposure media and routes of exposure for the site. The exposure media and routes of exposure are scored by entering a score of six to ten (6–10), one to five (1–5), or zero (0) in each matrix box if potential exposures to human populations are highly probable, potential or possible, or not apparent, respectively, for that exposure medium and route of exposure. The total score for the section cannot exceed 30 points; that is, a maximum of 30 points may be distributed among the matrix boxes in the manner that best characterizes the primary human exposure media and routes of exposure for the site.

B. Biological Data

Biological Data refer to human samples of blood, urine, or other biological components that are analyzed to determine biological uptake of environmental chemicals or radiologic materials. The section is scored in a step-wise manner involving two parts, Part 1 and Part 2. Part 1 is scored first. If "Yes" is assigned to Part 1, a score of ten (10) is recorded for Part 1; Part 2 is then evaluated and scored. If "No" is assigned to Part 1, the score for Part 1 is zero (0), and Part 2 is not evaluated and scored. The total score for Biological Data is zero (0) if only Part 1 is evaluated; the total score is the sum of scores for Part 1 and 2 if both parts are evaluated.

Part 1 determines whether site-related biological data of adequate quality are available for the site. The term "site-related" denotes that the biological samples reflect the potential for the site population to be exposed (see IIA). The term "adequate quality" indicates that the biological data were evaluated for quality assurance and quality control procedures and met the appropriate standards.

If the response to Part 1 is "Yes", that is, there are site-related biological data of adequate quality, enter a score of ten (10) on the blank next to the "(10)" and go to Part 2. if no such biological data are available, enter a score of zero (0) in the blank next to "(0)" and to section V.

Part 2 determines whether the biological data (identified in Part 1) indicate that significant human exposures to environmental contaminants or radiologic materials are likely to have occurred. The term "significant" indicates that contaminant concentrations or indicators (metabolites) reported for the biological samples are higher than expected for a "normal" or comparison population. (Note: information on "normal" ranges for specific contaminants, indicators, and metabolites may be obtained from the ATSDR Division of Health Studies).

A Comment field is provided to document any additional information that may be useful to consider in scoring the Biological Data section.

V. Health Outcome Data and Community Health Concerns

Health Outcome Data and Community Health Concerns are evaluated using two major components, Community Health Concerns and Health Outcome Data, which are shown on the horizontal axis of the scoring matrix. The Community Health Concerns component includes a multiplier for plausibility (defined later in these instructions). The Health Outcome Data and Community Health Concerns components are based on numerical ranges; interpolation of scores within a specified range is permissible.

Community Health Concerns refers to reports of adverse health occurrences or adverse health conditions by the site community, which comprises the site population (section III.A.) and all other persons who can provide or disseminate information about the site. (Note: a definition of the site community is provided in the ATSDR Public Health Assessment Guidance Manual). The Community Health Concerns component is scored High (6–10) if there are extensive community health concerns about the site; is scored Medium (4–5) if there are substantial community health concerns; and is scored Low (0–3) if there are few community health concerns.

A certain degree of professional judgment is required to score this component. Information supporting the scoring for Community Health Concerns can be documented under Comments on Health Outcome Data and Community Health Concerns at the end of section V.

Plausibility refers to whether there is biological plausibility for a link between potential human exposures to contaminants at the site and the Community Health Concerns. Plausibility is evaluated by considering the types of health concerns, the types and concentrations of contaminants, and the pathways of human exposure to site contaminants.

Plausibility is used as a multiplier for the Community Health Concerns component. The multiplier is two (2) points if biological plausibility can be established between hazardous substances at the site and the Community Health Concerns. The multiplier is on (1) if biological plausibility is possible or not known; the multiplier is zero (0) if there is no biological plausibility.

The overall score for Community Health Concerns is derived by multiplying the plausibility value (0, 1, or 2) by the score for the extent of Community Health Concerns (6–10; 4–5; 0).

Health Outcome Data refer to various sources of health information for the site population, such as morbidity and mortality data routinely collected by states; information recorded in hospital discharge records; and findings from epidemiologic studies involving the site population. A more inclusive list of Health Outcome Data sources is available from ATSDR.

The Health Outcome Data component is evaluated based on whether Health Outcome Data are available and accessible to evaluate community health concerns and possible toxicologic endpoints for human exposure to site contaminants.

Health Outcome Data are scored High (6–10) if substantial data are available and accessible, and if the data are appropriate to address community health concerns and possible toxicologic endpoints for the site population. Health Outcome Data are scored Medium (4–5) if a limited quantity are available and accessible or if the available data are not applicable to the site population. Health Outcome Data are scored Low (0–3) if minimal or no Health Outcome Data are available to address community health concerns and toxicologic endpoints for the site population.

A total score Health Outcome Data and Community Health Concerns (maximum of 30) is derived by adding the overall score for Community Health Concerns with that for Health Outcome Data. A Comment field is provided at the end of this section to document any additional information that may be relevant in evaluating Community Health Concerns and Health Outcome Data for the site.

VI. Total Site Score and General Comments

A General Comment field is also provided to record any additional information that may be useful for completing the SRS scoring sheet for the site. A total site score is derived by adding the scores for the individual sections II. through V. An individual site can attain a maximum score of 140. ATSDR makes no claim that there is a linear relationship between varying degrees of hazard at a site and the site ranking scheme scores (i.e., a site scoring 70 does not necessarily pose twice the hazard of a site scoring 35). This instrument is solely intended to provide an estimate of the hazard of each site compared with the hazards posed by other sites.

[FR Doc. 92–19541 Filed 8–17–92; 8:45 am]

BILLING CODE 4160–70–M

federal register

Tuesday
August 18, 1992

Part IX

Department of Transportation

Federal Highway Administration

49 CFR Chapter III

Zero-Base Review of the Federal Motor Carrier Safety Regulations; Public Outreach Sessions; Proposed Rules

DEPARTMENT OF TRANSPORTATION

Federal Highway Administration

49 CFR Chapter III

[FHWA Docket No. MC-92-33]

Zero-Base Review of the Federal Motor Carrier Safety Regulations; Public Outreach Sessions

AGENCY: Federal Highway Administration (FHWA), DOT.

ACTION: Notice of public outreach sessions; opening of public docket; request for comments.

SUMMARY: The FHWA announces a series of public outreach sessions to obtain comments and recommendations for improvement of the Federal Motor Carrier Safety Regulations (FMCSRs) as they relate to the commercial motor carrier industry. The first four sessions will begin in September and additional sessions will be held in other regions throughout the country with dates and locations to be announced in a subsequent notice. The outreach sessions are an essential part of FHWA's zero-base regulatory review project. The zero-base review is intended to develop a performance-based regulatory system that will best enhance commercial motor vehicle safety. These sessions will be held to obtain information, views, and opinions from representatives of the motor carrier industry and other interested persons.

DATES: The comment period will remain open until further notification in the **Federal Register**. The outreach sessions will be held from 9:30 a.m. to 3:30 p.m., local time, on each of the following dates:

Session 1: September 14, 1992.
Session 2: September 17, 1992.
Session 3: September 21, 1992.
Session 4: September 24, 1992.

ADDRESSES: Submit written, signed comments to FHWA Docket MC-92-33, room 4232, HCC-10, Office of the Chief Counsel, Federal Highway Administration, 400 Seventh Street, SW., Washington, DC 20590. All comments received will be available for examination at the above address from 8:30 a.m. to 3:30 p.m., e.t., Monday through Friday, except legal Federal holidays. Those desiring notification of receipt of comments must include a self-addressed, stamped postcard. The outreach sessions will be held at the following locations:

Session 1—St. Paul, Minnesota, Bloomington Marriott Hotel, 2020 East 79th Street, Bloomington, Minnesota 55425, Telephone 612/854-7441.

Session 2—Portland, Oregon, Monarch Hotel and Conference Center, 12566 SE. Ninety-Third Avenue, Clackamas, Oregon 97015, Telephone 503/652-1515.

Session 3—San Antonio, Texas, San Antonio Airport Hilton, 611 NW. Loop 410, San Antonio, Texas, 78216, Telephone 512/340/6060.

Session 4—Los Angeles, California, Hyatt at Los Angeles Airport, 6225 West Century Boulevard, Los Angeles, California 90045, Telephone 310/672-1234.

FOR PLANNING PURPOSES AND FURTHER INFORMATION CONTACT: Ms. Paula R. Robinson or Mr. Stan Hamilton, Federal Highway Administration, Office of Motor Carriers, 400 Seventh Street, SW., room 3404, Washington, DC 20590, telephone (202) 366-2984, by September 4, 1992. Office hours are from 7:45 a.m. to 4:15 p.m., e.t., Monday through Friday, except legal Federal holidays. In advance of each session, all individuals desiring to appear or planning present information should contact Mr. Stan Hamilton, Office of Motor Carriers, telephone (202) 366-0665.

SUPPLEMENTARY INFORMATION: The Federal Motor Carrier Safety Regulations were enacted under the Motor Carrier Act of 1935, Ch. 498, 49 Stat. 546 (codified as amended at 49 U.S.C. 3102 & 3104). The regulations have been incrementally modified ever since. The authority for the current regulations has been vested in the Department of Transportation since 1966 (49 U.S.C. 1655(e)). All private, exempt commodity, common, and contract motor carriers of property and all for-hire carriers of passengers, as defined in the FMCSRs, are currently subject to these regulations. Additionally, the FHWA has proposed making private motor carriers of passengers subject to certain minimum safety requirements (54 FR 7362; notice of proposed rulemaking (1989)).

The FHWA recently completed a review of the FMCSRs in accordance with the President's January 28, 1992, Memorandum to Heads of Certain Executive Departments and Agencies to identify and eliminate any unnecessary regulatory burdens. Having completed that review, the FHWA believes it is appropriate to reconsider the underlying basis for all safety rules and to identify a performance-oriented regulatory structure that would enhance safety while minimizing the burdens placed on industry.

The FHWA believes the motor carrier industry will benefit from a regulatory structure that is more performance-oriented as opposed to prescriptive. Many of the basic provisions of the FMCSRs have remained unchanged for more than 50 years while others have been amended numerous times. The FHWA believes this has led to a set of regulations which can be difficult to understand and enforce. The FHWA plans to use the comments and recommendations gathered from the outreach sessions as the foundation to develop a comprehensive, unified set of performance-oriented safety requirements designed to ensure maximum safety on the Nation's highways. Discussion at the sessions will focus on identifying "who," "what," and "how" the FHWA should regulate commercial motor carriers and drivers to improve highway safety.

The goals and objectives of the zero-base review project are to: (1) Focus on those areas of enforcement and compliance which are most effective in reducing motor carrier accidents; (2) reduce compliance costs; (3) encourage innovation; (4) clearly and succinctly describe what is required; and (5) facilitate enforcement. The resulting regulatory system would apply to all appropriate segments of the motor carrier industry and would be enforceable by Federal, State and local authorities.

The performance-based regulations would be responsive to the needs of the industry and would enhance the safe operation of commercial motor vehicles.

Concurrent with the outreach effort, the FHWA will open a public docket, MC-92-33 to allow commenters and interested parties who might be unable to attend the outreach sessions the opportunity to respond to the zero-base effort.

(23 U.S.C. 315; 49 CFR 1.48)

Issued on: August 10, 1992.

T.D. Larson,

Administrator.

[FR Doc. 92-19412 Filed 8-17-92; 8:45 am]

BILLING CODE 4910-22-M

Reader Aids

Federal Register

Vol. 57, No. 160

Tuesday, August 18, 1992

INFORMATION AND ASSISTANCE

Federal Register

Index, finding aids & general information	202-523-5227
Public inspection desk	523-5215
Corrections to published documents	523-5237
Document drafting information	523-3187
Machine readable documents	523-3447

Code of Federal Regulations

Index, finding aids & general information	523-5227
Printing schedules	512-1557

Laws

Public Laws Update Service (numbers, dates, etc.)	523-6641
Additional information	523-5230

Presidential Documents

Executive orders and proclamations	523-5230
Public Papers of the Presidents	523-5230
Weekly Compilation of Presidential Documents	523-5230

The United States Government Manual

General information	523-5230

Other Services

Data base and machine readable specifications	523-3447
Guide to Record Retention Requirements	523-3187
Legal staff	523-4534
Privacy Act Compilation	523-3187
Public Laws Update Service (PLUS)	523-6641
TDD for the hearing impaired	523-5229

FEDERAL REGISTER PAGES AND DATES, AUGUST

34061-34200 3
34201-34494 4
34495-34664 5
34665-34850 6
34851-35454 7
35455-35744 10
35745-35980 11
35981-36350 12
36351-36586 13
36587-36886 14
36887-37078 17
37079-37392 18

CFR PARTS AFFECTED DURING AUGUST

At the end of each month, the Office of the Federal Register publishes separately a List of CFR Sections Affected (LSA), which lists parts and sections affected by documents published since the revision date of each title.

3 CFR

Proclamations:
6463 36349
6464 36887

Executive Orders:
8597 (Revoked by PLO 6939 of July 22, 1992) 35467
12674 (See OGE final rule of May 7, 1992) 35006
12731 (See OGE final rule of May 7, 1992) 35006
12813 34851

Administrative Orders:
Presidential Determinations:
No. 92-37 of August 3, 1992 36587

4 CFR
Ch. III 34167

5 CFR
532 35745
2635 35006

Proposed Rules:
297 35491

7 CFR
28 34495
246 34500
302 37079
400 34665
718 34201
719 34201
720 34201
907 34203
908 34203
932 ..... 35745, 36351
944 ..... 35747, 36354
989 34206
998 34061
1209 ..... 34349, 35004
1413 34201
1414 34201
1806 36589
1863 36589
1925 36589
1942 35627
1944 36589
1945 36589
1951 36589
1955 36589
1962 36589
1965 36589

Proposed Rules:
58 35492
300 34349
318 35627
319 34349
906 34268
948 34269
1001 36609
1002 36609
1004 36609
1005 36609
1007 36609
1011 36609
1030 36609
1033 36536
1036 36536
1040 36609
1044 36609
1046 36609
1049 36536
1065 36609
1068 36609
1079 36609
1093 36609
1094 36609
1096 36609
1097 36609
1098 36609
1099 36609
1106 36609
1108 36609
1124 34694
1126 36609
1131 36609
1135 34694
1138 36609
1209 36610
1413 34087

8 CFR
103 34506
240 34506

9 CFR
78 ..... 37080, 37081
94 37081
303 34174
327 36889
381 34174

Proposed Rules:
318 35505

10 CFR
50 35455
220 36890
300 36890
320 36890

Proposed Rules:
Ch. I 34886
20 36611
50 ..... 34666, 36909
140 36909

11 CFR
110 36344
200 34508

Proposed Rules:
110 ... 36023

12 CFR

201 ... 34064
226 ... 34676
229 ... 36593, 36599
545 ... 37083
571 ... 37083
584 ... 35456
1102 ... 35004, 36356
1617 ... 35728

Proposed Rules:
Ch. VII ... 34090
3 ... 35507
34 ... 36911
203 ... 36024
208 ... 35507
220 ... 37109
225 ... 35507
325 ... 35507
552 ... 37112
563 ... 36911, 37112
741 ... 34091

14 CFR

13 ... 34511
21 ... 34208–34213, 34511, 35981
23 ... 35981
25 ... 34208–34213, 34511, 34681
39 ... 34065–34073, 34215–34220, 35982, 36891–36901
71 ... 34074, 35983, 36601
91 ... 34614
93 ... 37308
95 ... 36361
97 ... 34221, 34512, 35984, 35986
121 ... 34681
135 ... 34681

Proposed Rules:
1 ... 35888
21 ... 34270, 36027, 36029, 36375
25 ... 34270, 36375
27 ... 36027
29 ... 36029
39 ... 36439, 36614, 36917–36928, 37118
71 ... 36616
61 ... 35888
71 ... 34271, 34530, 34531, 34809, 36031, 36378
91 ... 35888
121 ... 35888
125 ... 35888
135 ... 35888
141 ... 35888
142 ... 35888

15 CFR

903 ... 35749

Proposed Rules:
280 ... 37032
799 ... 36929

16 CFR

260 ... 36363
305 ... 36902
1115 ... 34222
1116 ... 34230

Proposed Rules:
19 ... 34532
23 ... 34532
245 ... 34532
453 ... 34532
1116 ... 34272
1145 ... 36929
1210 ... 36932
1700 ... 34274

17 CFR

4 ... 34853
30 ... 36369
32 ... 36369
200 ... 36442
210 ... 36442
228 ... 36442
229 ... 36442
230 ... 36442
239 ... 36442, 37084
240 ... 36442
249 ... 36442
260 ... 36442

Proposed Rules:
1 ... 34533
200 ... 35070, 35202
201 ... 35070
202 ... 35070, 35431, 35442
210 ... 35070
228 ... 36502
229 ... 35070, 35202
230 ... 35070, 35202, 36502
232 ... 35070
239 ... 34701, 35070, 35202, 36502
240 ... 34701, 35070, 35202, 36502
249 ... 35070, 35202, 36502
250 ... 35431
259 ... 35070
260 ... 35070, 35442, 36502
269 ... 35431
270 ... 34701, 34726, 35202
274 ... 34701, 35202

18 CFR

271 ... 34682
284 ... 36128

Proposed Rules:
2 ... 35525
284 ... 35525, 35766

19 CFR

4 ... 35750
24 ... 35458
207 ... 34820

Proposed Rules:
101 ... 34809, 35530
146 ... 35530

20 CFR

10 ... 35752
416 ... 35459

21 CFR

14 ... 35461
155 ... 34244
169 ... 34245
176 ... 34865
178 ... 35462
510 ... 35988
520 ... 35988, 37318
522 ... 37318
524 ... 37318
526 ... 37318
529 ... 37318
536 ... 37318
539 ... 37318
540 ... 37318
544 ... 37318
546 ... 37318
548 ... 37318
555 ... 37318
558 ... 34515
1308 ... 36371, 36372

Proposed Rules:
20 ... 36617
101 ... 37190
341 ... 34733–34735
1301 ... 36439
1304 ... 36439

23 CFR

1212 ... 35989

Proposed Rules:
750 ... 34168

24 CFR

4 ... 34246
25 ... 37085
202 ... 37085
889 ... 36338
890 ... 36330
905 ... 37085

Proposed Rules:
92 ... 34640
207 ... 37119
213 ... 37119
220 ... 37119
221 ... 37119
231 ... 37119
232 ... 37119
234 ... 37119
242 ... 37119
244 ... 37119
290 ... 34834
886 ... 34834

25 CFR

Proposed Rules:
515 ... 34809
519 ... 34349
522 ... 34349
523 ... 34349
524 ... 34349
556 ... 34349
558 ... 34349
571 ... 34809
577 ... 34809

26 CFR

1 ... 36001, 37189
5f ... 36001
301 ... 36691, 37085, 37189
602 ... 36001

Proposed Rules:
1 ... 34092, 34736, 34740, 34886, 35536
5h ... 34736, 34740
301 ... 36031

28 CFR

524 ... 34662
571 ... 34662

29 CFR

1910 ... 35630
1926 ... 35630
2619 ... 36602
2676 ... 36603

Proposed Rules:
1910 ... 34192, 36964, 37126
1915 ... 36964, 37126
1917 ... 37126
1918 ... 37126
1926 ... 34656, 36964, 37126
1928 ... 37126

30 CFR

70 ... 34683
75 ... 34683
917 ... 37086
935 ... 37093, 37096

Proposed Rules:
250 ... 36032
718 ... 35960
720 ... 35960
913 ... 37127
916 ... 37132
920 ... 37133, 37134
935 ... 37136, 37138

31 CFR

312 ... 34684
317 ... 34684

Proposed Rules:
210 ... 34650
257 ... 37139

32 CFR

191 ... 35755
701 ... 37100
706 ... 35463, 35464

33 CFR

100 ... 34075
117 ... 34868
135 ... 36314
136 ... 36314
137 ... 36314
155 ... 36222
157 ... 36222
165 ... 35465, 35466, 35755
222 ... 35757

Proposed Rules:
165 ... 34741, 36034
179 ... 36034

34 CFR

8 ... 34646
400 ... 36720
401 ... 36720
402 ... 36720
403 ... 36720
405 ... 36720
406 ... 36720
407 ... 36720
408 ... 36720
409 ... 36720
410 ... 36720
411 ... 36720
412 ... 36720
413 ... 36720
414 ... 36720
415 ... 36720
416 ... 36720
417 ... 36720
418 ... 36720
419 ... 36720
421 ... 36720
422 ... 36720
423 ... 36720
424 ... 36720
425 ... 36720
426 ... 36720
427 ... 36720
428 ... 36720

Proposed Rules:
99 ... 35964

280 ... 36324
316 ... 34620
318 ... 34620
319 ... 34620
366 ... 36617
555 ... 34488

35 CFR

133 ... 37066

36 CFR

Proposed Rules:
251 ... 36618

37 CFR

Proposed Rules:
1 ... 36034
10 ... 36034

38 CFR

3 ... 34517, 36439
21 ... 35628

Proposed Rules:
3 ... 34536

39 CFR

232 ... 36903

40 CFR

52 ... 34249-34251, 35758, 35759, 36004, 36603, 37100
148 ... 37194
180 ... 34517, 34518, 36004
185 ... 36005
260 ... 37194
261 ... 37194, 37284
262 ... 37194
264 ... 37194
265 ... 37194
268 ... 37194
270 ... 37194
271 ... 37194, 37284
281 ... 34519
302 ... 37284
721 ... 34252

Proposed Rules:
50 ... 35542
52 ... 35769, 35771, 36040
122 ... 35774
180 ... 34537, 36042-36046
261 ... 36866
268 ... 35940
271 ... 35940
300 ... 34742
308 ... 34742
721 ... 34281-34283

41 CFR

101-45 ... 34253

42 CFR

405 ... 36006
406 ... 36006
409 ... 36006
410 ... 36006
411 ... 36006
412 ... 36006
413 ... 36006
418 ... 36006
420 ... 35760
489 ... 36006
493 ... 35760

Proposed Rules:
100 ... 36878
435 ... 36968
436 ... 36968

43 CFR

3100 ... 35968

Public Land Orders:
6932 ... 35627
6938 ... 34520
6939 ... 35467
6940 ... 35468
6941 ... 34685

Proposed Rules:
12 ... 34755

44 CFR

64 ... 34685, 34688
361 ... 34868

45 CFR

98 ... 34352
99 ... 34352
255 ... 34434
257 ... 34434
801 ... 36018
1180 ... 36903

Proposed Rules:
1224 ... 35775

46 CFR

28 ... 34188
30 ... 36222
32 ... 36222
70 ... 36222
90 ... 36222
172 ... 36222
272 ... 34689
298 ... 34690
514 ... 36248
515 ... 36248
520 ... 35761
550 ... 34076, 35761, 36248
580 ... 34076, 35761, 36248
581 ... 36248

47 CFR

22 ... 34077, 37105
43 ... 34520
64 ... 34253, 37106
73 ... 34077, 34078, 34263, 34692, 34872, 35763, 36018-36021, 36906
76 ... 35468
80 ... 34261
90 ... 34692
95 ... 36372

Proposed Rules:
Ch. I ... 35776
1 ... 36047
15 ... 36049
21 ... 34889
22 ... 34889
23 ... 34889
25 ... 34889
73 ... 34092, 34284, 34285, 36047, 36050, 36051, 36971
74 ... 36378
94 ... 34093
97 ... 34285

48 CFR

332 ... 35472
333 ... 35472
2509 ... 34881
2527 ... 34882
9900 ... 34167
9902 ... 34167
9903 ... 34078, 34167
9904 ... 34078, 34167

Proposed Rules:
1819 ... 34094
1852 ... 34094
Ch. 20 ... 37140
5415 ... 36051
5446 ... 37142
5452 ... 36051, 37142

49 CFR

1063 ... 35763
1109 ... 35628

Proposed Rules:
171 ... 36694
172 ... 34542, 36694
173 ... 36694
178 ... 36694
180 ... 36694
225 ... 34756
234 ... 36054
Ch. III ... 37392
571 ... 34539
1002 ... 35557
1039 ... 34890
1141 ... 34891
1180 ... 34891, 35559
1207 ... 36972
1249 ... 36972

50 CFR

17 ... 35473
215 ... 34081
227 ... 36906
630 ... 34264
661 ... 34085, 34883, 34884, 35764, 36021, 36607, 36608
663 ... 34266, 35765
672 ... 34884, 35004, 35487, 35489, 35765
675 ... 35487, 35489
683 ... 36907

Proposed Rules:
17 ... 34095-34100, 34892, 36380
20 ... 35446
216 ... 34101
218 ... 34101
222 ... 34101
226 ... 36626
611 ... 35627
625 ... 34107, 36055
642 ... 36972
663 ... 34757
685 ... 35627

LIST OF PUBLIC LAWS

Note: No public bills which have become law were received by the Office of the Federal Register for inclusion in today's **List of Public Laws**.

Last List August 14, 1992

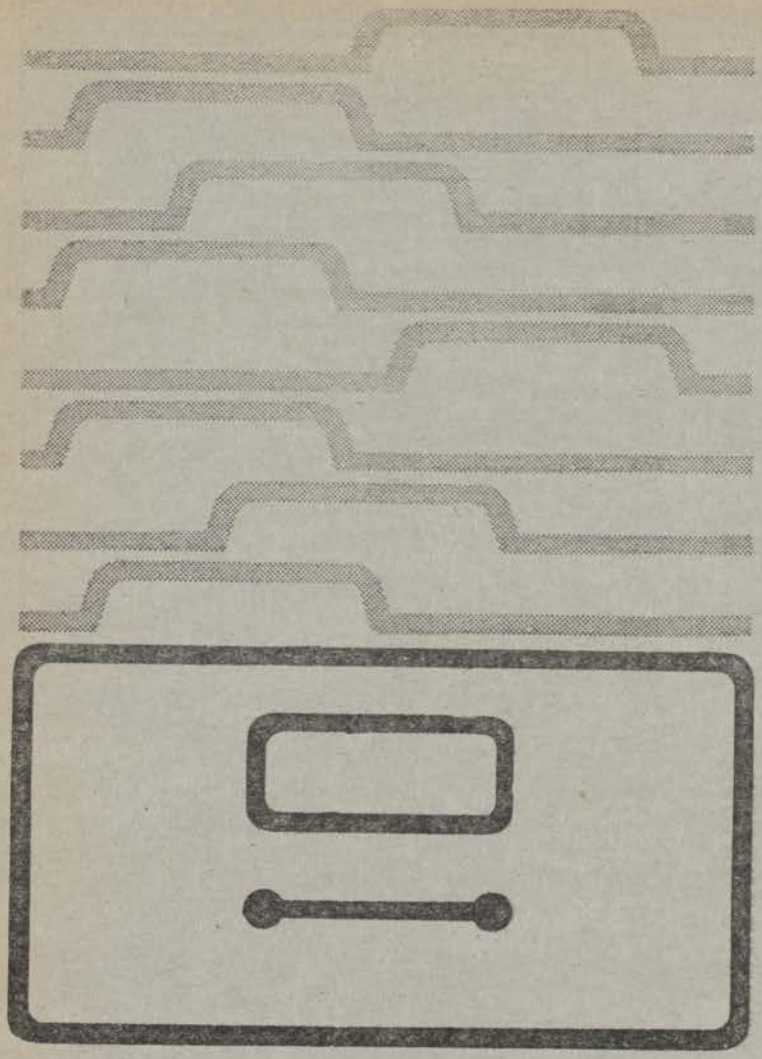

Guide to Record Retention Requirements

in the Code of Federal Regulations (CFR)

GUIDE: Revised January 1, 1992

The GUIDE to record retention is a useful reference tool, compiled from agency regulations, designed to assist anyone with Federal recordkeeping obligations.

The various abstracts in the GUIDE tell the user (1) what records must be kept, (2) who must keep them, and (3) how long they must be kept.

The GUIDE is formatted and numbered to parallel the CODE OF FEDERAL REGULATIONS (CFR) for uniformity of citation and easy reference to the source document.

Compiled by the Office of the Federal Register, National Archives and Records Administration.

Superintendent of Documents **Publications** Order Form

Order Processing Code:

*

P3

☐ **YES**, please send me the following:

Charge your order. It's Easy! MasterCard VISA

To fax your orders (202) 512-2250

_____copies of the 1992 GUIDE TO RECORD RETENTION REQUIREMENTS IN THE CFR S/N 069-000-00046-1 at $15.00 each.

The total cost of my order is $_____. International customers please add 25%. Prices include regular domestic postage and handling and are subject to change.

(Company or Personal Name) (Please type or print)

(Additional address/attention line)

(Street address)

(City, State, ZIP Code)

(Daytime phone including area code)

(Purchase Order No.)

YES NO

Please Choose Method of Payment:

☐ Check Payable to the Superintendent of Documents

☐ GPO Deposit Account ☐☐☐☐☐☐☐ – ☐

☐ VISA or MasterCard Account

☐☐☐☐☐☐☐☐☐☐☐☐☐☐☐☐☐☐☐☐

☐☐☐☐ (Credit card expiration date)

Thank you for your order!

(Authorizing Signature)

Mail To: New Orders, Superintendent of Documents

The authentic text behind the news . . .

The Weekly Compilation of **Presidential Documents**

Administration of George Bush

Weekly Compilation of
Presidential Documents

Monday, January 23, 1989
Volume 25—Number 4

This unique service provides up-to-date information on Presidential policies and announcements. It contains the full text of the President's public speeches, statements, messages to Congress, news conferences, personnel appointments and nominations, and other Presidential materials released by the White House.

The Weekly Compilation carries a Monday dateline and covers materials released during the preceding week. Each issue contains an Index of Contents and a Cumulative Index to Prior Issues.

Separate indexes are published periodically. Other features include lists of acts approved by the President, nominations submitted to the Senate, a checklist of White House press releases, and a digest of other Presidential activities and White House announcements.

Published by the Office of the Federal Register, National Archives and Records Administration.

Superintendent of Documents Subscriptions Order Form

Order Processing Code
*6466

Charge your order. It's easy! MasterCard VISA

Charge orders may be telephoned to the GPO order desk at (202) 783-3238 from 8:00 a.m. to 4:00 p.m. eastern time, Monday-Friday (except holidays)

☐ **YES,** please enter my subscription for one year to the **WEEKLY COMPILATION OF PRESIDENTIAL DOCUMENTS (PD)** so I can keep up to date on Presidential activities.

☐ $96.00 First Class ☐ $55.00 Regular Mail

. The total cost of my order is $_____. All prices include regular domestic postage and handling and are subject to change. International customers please add 25%.

Please Type or Print

2. _____
(Company or personal name)

_____
(Additional address/attention line)

_____
(Street address)

_____
(City, State, ZIP Code)

(_____) _____
(Daytime phone including area code)

3. Please choose method of payment:

☐ Check payable to the Superintendent of Documents

☐ GPO Deposit Account ☐☐☐☐☐☐☐–☐

☐ VISA or MasterCard Account

☐☐☐☐☐☐☐☐☐☐☐☐☐☐☐☐☐☐☐☐

_____ ***Thank you for your order!***
(Credit card expiration date)

_____
(Signature) (Rev. 6-20-92)

4. Mail To: New Orders, Superintendent of Documents, P.O. Box 371954, Pittsburgh, PA 15250-7954

.... Order now ! , , , ,

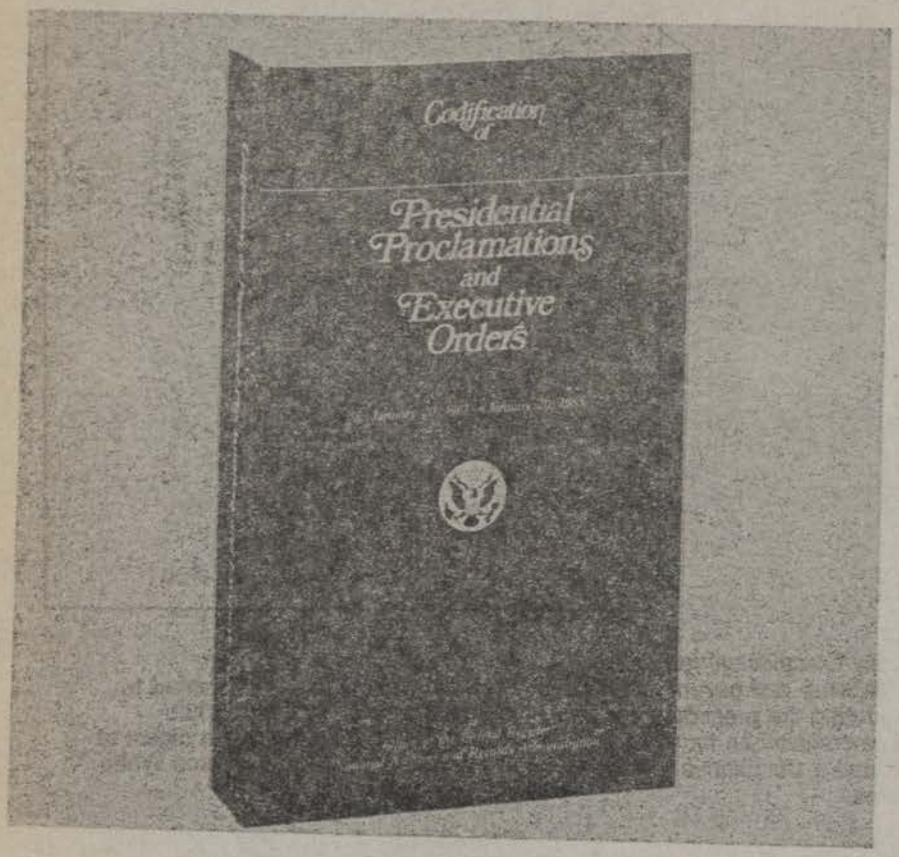

For those of you who must keep informed about **Presidential Proclamations and Executive Orders,** there is a convenient reference source that will make researching these documents much easier.

Arranged by subject matter, this edition of the *Codification* contains proclamations and Executive orders that were issued or amended during the period April 13, 1945, through January 20, 1989, and which have a continuing effect on the public. For those documents that have been affected by other proclamations or Executive orders, the codified text presents the amended version. Therefore, a reader can use the *Codification* to determine the latest text of a document without having to "reconstruct" it through extensive research.

Special features include a comprehensive index and a table listing each proclamation and Executive order issued during the 1945–1989 period—along with any amendments—an indication of its current status, and, where applicable, its location in this volume.

Published by the Office of the Federal Register, National Archives and Records Administration

---

Superintendent of Documents **Publications** Order Form

Order processing code:
*** 6661**

P3

☐ **YES**, please send me the following:

Charge your order. It's Easy! MasterCard VISA

To fax your orders (202)–512–2250

_____ copies of CODIFICATION OF PRESIDENTIAL PROCLAMATIONS AND EXECUTIVE ORDERS. S/N 069-000-00018-5 at $32.00 each.

The total cost of my order is $_____. International customers please add 25%. Prices include regular domestic postage and handling and are subject to change.

(Company or Personal Name) (Please type or print)

(Additional address/attention line)

(Street address)

(City, State, ZIP Code)

(Daytime phone including area code)

(Purchase Order No.)

May we make your name/address available to other mailers? YES ☐ NO ☐

Please Choose Method of Payment:

☐ Check Payable to the Superintendent of Documents

☐ GPO Deposit Account ☐☐☐☐☐☐☐ – ☐

☐ VISA or MasterCard Account

☐☐☐☐☐☐☐☐☐☐☐☐☐☐☐☐☐☐☐☐

☐☐☐☐ (Credit card expiration date)

Thank you for your order!

(Authorizing Signature) (12/91)

Mail To: New Orders, Superintendent of Documents
P.O. Box 371954, Pittsburgh, PA 15250–7954